Column™ Push Plate Switches

TOP LOAD
4-1/2" WIDE - CM-74 SERIES
6" WIDE - CM-75 SERIES

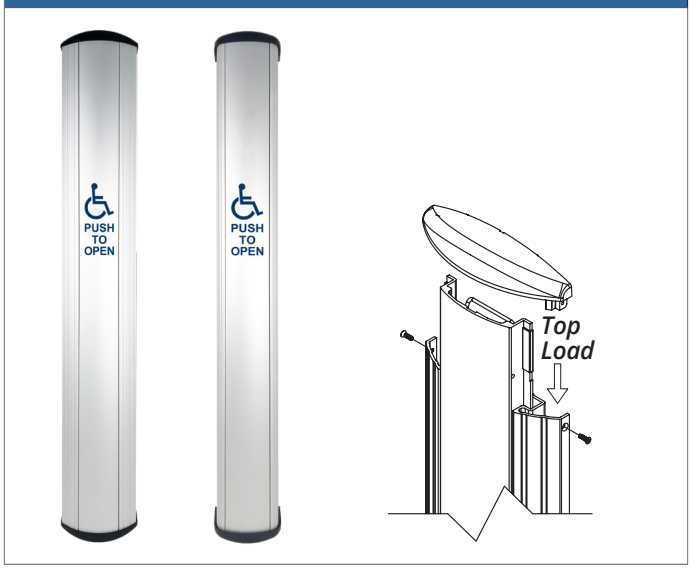

Camden **CM-74 & CM-75 Series** 'Top Load' Column™ push plate switches are surface-mounted and designed for use when there is no obstruction above the installed unit, and a very low profile is desired.

Features

- OBC, NBC, & CSA compliant activation plate (Stainless Steel model not CSA compliant)
- Option for built-in touchless activation sensor
- Option for Kinetic™ or Lazerpoint™ wireless
- Surface mount with leveling screws (no back box)

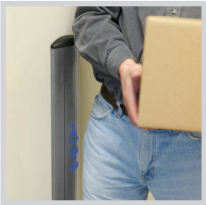

SIDE LOAD
4-1/2" WIDE - CM-84 SERIES
6" WIDE - CM-85 SERIES

Camden **CM-84 & CM-85 Series** 'Side Load' Column™ push plate switches feature a two-piece construction with a surface-mount back box and are designed for use when an obstruction above the installed unit prevents the installation of a 'Top Load' model; where the Column™ switch is mounted to narrow curtain wall, or where the Column™ switch will span a lite of glass.

Features

- 2-1/4" (32mm) deep with CSA compliant activation plate
- Heavy-duty extruded aluminum construction
- Option for built-in touchless activation sensor
- Option for Kinetic™ or Lazerpoint™ wireless
- Option for DPDT switches
- Surface mount with integral back box

SPECIFICATIONS

VOLTAGE:	**Standard Models:** N/A **VR Models:** 12-24 VDC +/- 10%	CONTACT TYPE:	**Standard Models:** SPDT Momentary, Form 'C' *Optional DPDT switch used with CM-84 & 85 series* **VR Models:** Common / N.O. / N.C.
CONTACT RATING:	**Standard Models:** 15 Amps @ 30 VDC **VR Models:** 1 Amp @ 30 VDC		

MODELS

TOP LOAD – 4-1/2" WIDE	
CM-7436	36" x 4-1/2" Column™ aluminum push plate switch, anodized clear finish
CM-7436VR	36" x 4-1/2" Column™ aluminum push plate switch with hands-free sensor, anodized clear finish
CM-7436K	36" x 4-1/2" Column™ aluminum push plate switch, anodized clear finish with built-in Kinetic no-battery wireless transmitters, receiver required
TOP LOAD - 6" WIDE	
CM-7536	36" x 6" Column™ aluminum push plate switch, anodized clear finish
CM-7536VR	36" x 6" Column™ aluminum push plate switch with hands-free sensor, anodized clear finish
CM-7536K	36" x 6" Column™ aluminum push plate switch, anodized clear finish with built-in Kinetic no-battery wireless transmitters, receiver required
CM-7536SS	36"x 6" Column™ stainless steel push plate switch, brushed stainless steel finish
CM-7536SSK	36" x 6" Column™ stainless steel push plate switch, brushed stainless steel finish with built-in Kinetic no-battery wireless transmitters, receiver required

TOP LOAD COLUMN™ SWITCH DIMENSIONS & IMAGES

ALUMINUM MODELS

CM-7436/4 | **CM-7536/4**

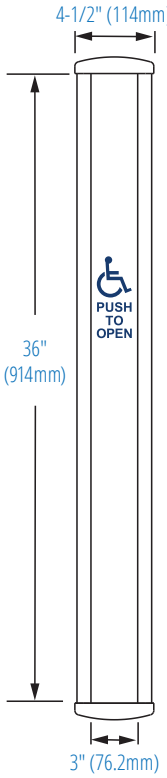

4-1/2" Top Load Dimensions

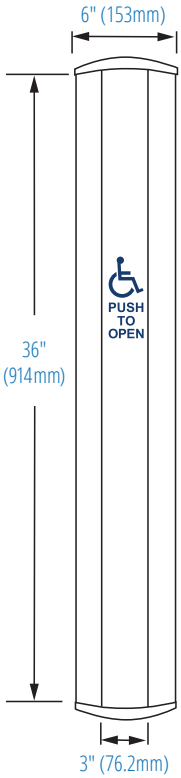

6" Top Load Dimensions

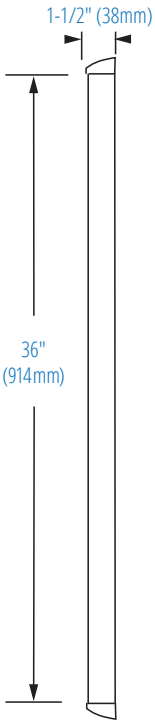

Top Load Side View Dimensions

STAINLESS STEEL MODELS

CM-7536SS/4

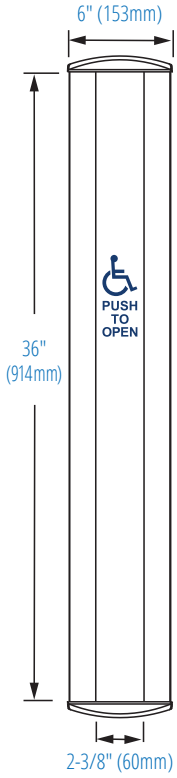

CM-7536SS/4 Dimensions

MODELS

SIDE LOAD – 4-1/2" WIDE	
CM-8436	36" x 4-1/2" Column™ aluminum side load push plate switch, anodized clear finish
CM-8436VR	36" x 4-1/2" Column™ aluminum side load push plate switch with hands-free sensor, anodized clear finish
CM-8436K	36" x 4-1/2" Column™ aluminum side load push plate switch, anodized clear finish with built-in Kinetic no-battery wireless transmitters, receiver required
SIDE LOAD - 6" WIDE	
CM-8536	36" x 6" Column™ aluminum side load push plate switch, anodized clear finish
CM-8536VR	36" x 6" Column™ aluminum side load push plate switch with hands-free sensor, anodized clear finish
CM-8536K	36" x 6" Column™ aluminum side load push plate switch, anodized clear finish with built-in Kinetic no-battery wireless transmitters, receiver required

SIDE LOAD COLUMN™ SWITCH DIMENSIONS & IMAGES

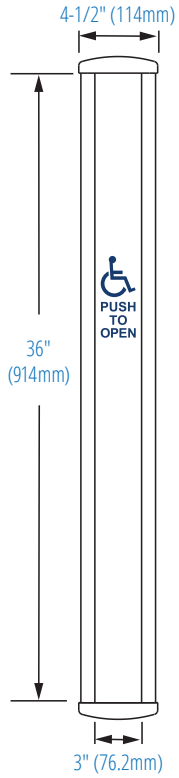

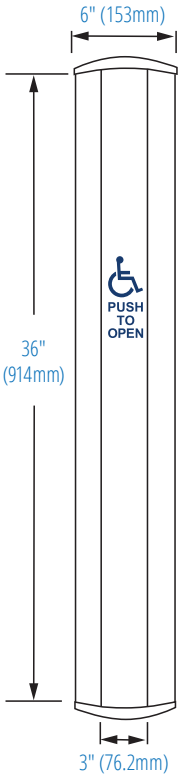

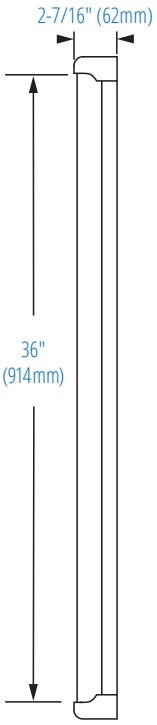

CM-8436/4	CM-8536/4	4-1/2" Side Load Dimensions	6" Side Load Dimensions	Side Load Side View Dimensions

BATTERY POWERED WIRELESS TRANSMITTER

-TX	(1) CM-TX-9 Lazerpoint™ wireless transmitter with alkaline battery pack, mounted in Column™ switch cap
-TXL2	(1) CM-TX-9 Lazerpoint™ wireless transmitter with lithium battery pack, mounted in Column™ switch cap

WIRELESS RECEIVERS (Order seperately)

CM-RX-90	Kinetic by Camden™ and Lazerpoint™ compatible receiver
CM-RX-91	Lazerpoint™ compatible single relay receiver
CM-RX-92	Lazerpoint™ compatible dual relay receiver

ARCHITECTURAL FINISHES

-BRZ	Add suffix '-BRZ' for anodized dark bronze finish (BHMA 710, 313AN)
-BLK	Add suffix '-BLK' anodized black finish (BHMA 711)

WATERPROOFING OPTION

-WT	Add '-WT' to Product # for Boot & Water Tight Coating

CONTACT SWITCH OPTION (CM-84 & 85 Series Only)

-DP	Add '-DP' to Product # for 2 x DPDT switches

FACEPLATE GRAPHIC OPTIONS (Add suffix to model number, Add suffix 'F' for French, 'FE' for bilingual, 'SP' for Spanish)

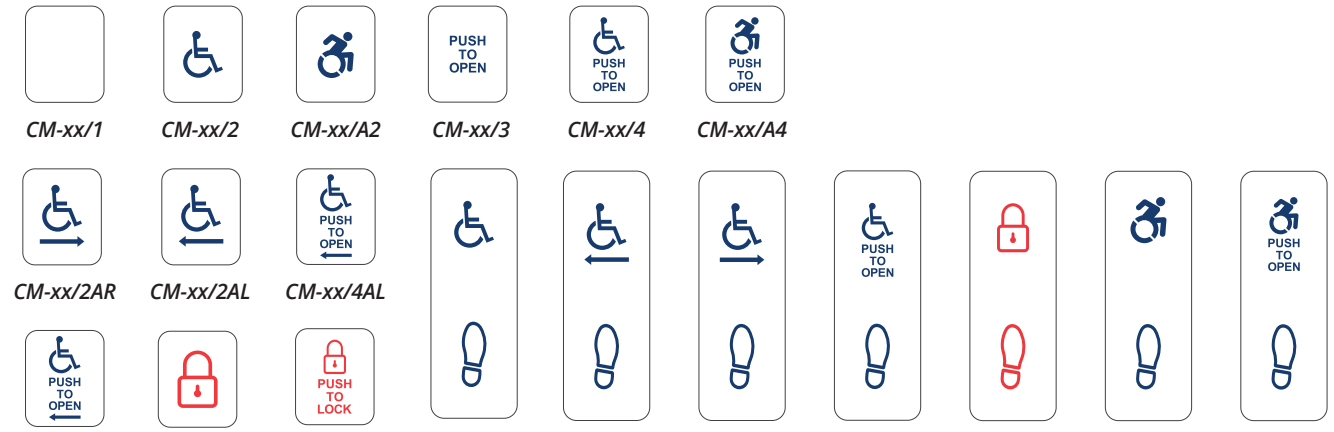

CM-xx/1 | CM-xx/2 | CM-xx/A2 | CM-xx/3 | CM-xx/4 | CM-xx/A4

CM-xx/2AR | CM-xx/2AL | CM-xx/4AL

CM-xx/4AR | CM-xx/8C | CM-xx/8B | CM-xx/20 | CM-xx/20AL | CM-xx/20AR | CM-xx/40 | CM-xx/80 | CM-xx/A20 | CM-xx/A40

NOTE: VR Models Include SureWave™ Waving Hand Icon

SURFACE MOUNTING BOXES FOR CM-75 SERIES

CM-75SB	Surface Mount, Powder Coated Electrical Gray, 16-Gauge Steel
CM-75SB-BK	Surface Mount, Powder Coated Black, 16-Gauge Steel

RETROFIT BACK BOX KITS FOR COLUMN™ SWITCHES

CM-85BB	6" aluminum surface box complete with deep caps and hardware for converting CM-7536 V2 to CM-8536
CM-84BB	4.5" aluminum surface box complete with deep caps and hardware for converting CM-7436 V2 to CM-8436

NOTE: Not suitable for original style Column™ switches or stainless steel Column™ switches. Back box kits also available in bronze or black architectural finishes.

SURFACE BOX DIMENSIONS

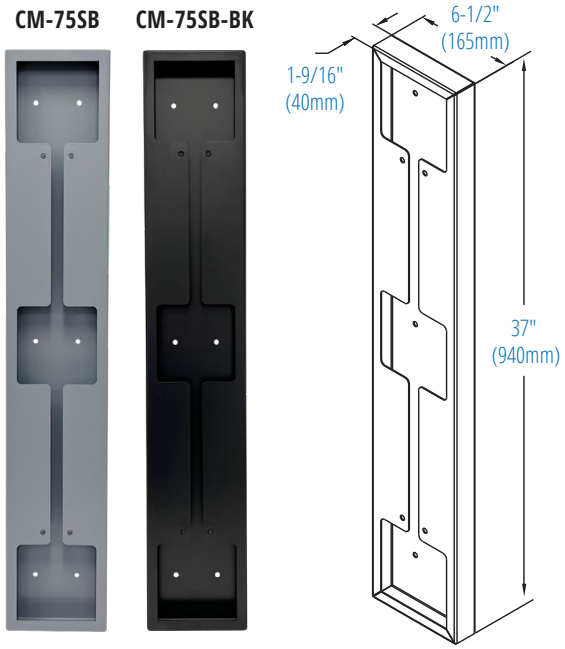

RETROFIT BACK BOX DIMENSIONS

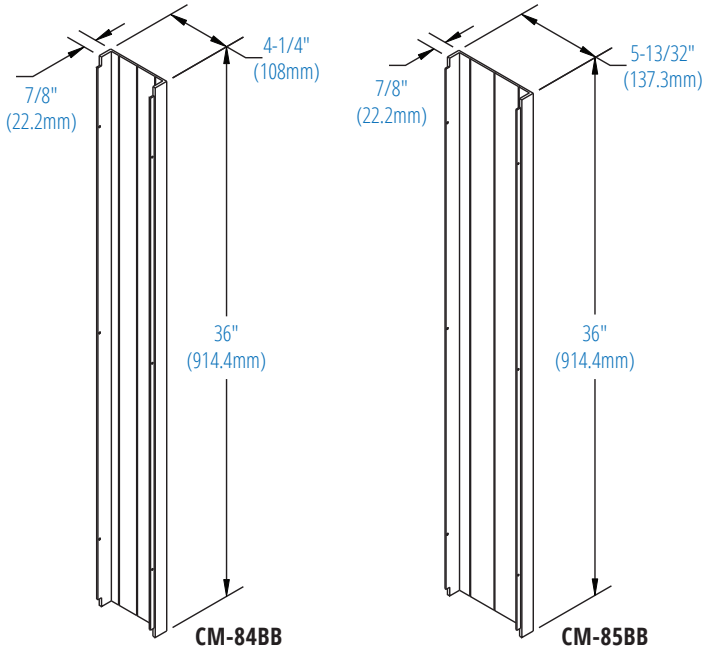

CAMDEN DOOR CONTROLS

Opening New Doors to Innovation, Quality, and Support!

2395 Skymark Ave, Mississauga, ON Canada L4W 4Y6 • Toll Free: 1(877) 226-3369 (CAMDEN9)
Tel: (905) 366-3377 | Fax: (905) 366-3378 | E-mail: info@camdencontrols.com | www.camdencontrols.com

BSI Certified ISO 9001: 2015
FS 541752
Part #: MKTG-LIT-SP-COLUMNSW
Rev1