CM-45/46

4 -1/2" SQUARE ALL - ACTIVE SWITCHES

UL Listed Components

ADA Compliant

CM-45/2
(CONCEALED MOUNTING SCREWS)

CM-46/4
(EXPOSED MOUNTING SCREWS)

CM-46CB/4
(EXPOSED MOUNTING SCREWS)

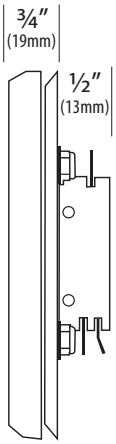

CM-45/46

FEATURES

- LARGE, EASY TO OPERATE SWITCHES
- ALL-ACTIVE DESIGN REQUIRES MINIMAL ACTUATION FORCE
- MEETS ADA REQUIREMENTS
- CM-45 AND CM-46 OFFER STAINLESS STEEL CONSTRUCTION. CM-46CB ALUMINUM FACEPLATE
- FLUSH MOUNT OR SURFACE MOUNT
- UL/CSA APPROVED SWITCH, RATED 15 AMPS @ 30V DC
- AVAILABLE WITH 'ACTIVE' WHEELCHAIR SYMBOL GRAPHICS
- OPTIONAL ARCHITECTURAL FINISHES

DESCRIPTION

Camden Door Controls CM-45/46 Series all-active switches are heavy-duty, ADA-compliant door controls. The 4-1/2" square faceplates are stainless steel or aluminum, and the assemblies are designed for easy installation.

Both series mount to standard single gang or double gang electrical boxes. CM-45 series is sold as a complete assembly, which is mounted to the in-wall box (or surface box) using stainless steel Allen screws and a hex key (included with the switch). Access to the mounting screws is through small holes in the front of the faceplate. This provides for tamper resistance, while maintaining an attractive overall appearance.

CM-46 series is sold as a two part assembly. The rear assembly is mounted to the in-wall box (or surface box). The front faceplate is then screwed to the rear assembly using either standard or security screws (included with kit).

The SPDT (and optional DPDT) switches are UL/CSA approved, and rated 15 amps @ 30 VDC. The push switches are offered with different graphics, and in various architectural finishes. Weather resistant, and water tight configurations are also available.

APPLICATION

Camden all-active switches are designed for areas where an easy-to-activate, high visibility switch is desired. Ideal for high-traffic areas, hospitals, wheelchair access, seniors' residences, etc. They can be surface or flush mounted.

Camden all-active switches are designed to control electric strikes, electromagnetic locks and automatic doors. They may also be used for shunting, bypassing alarms, request to exit, timed functions, and many other applications.

The switches are made for high frequency usage, in both indoor and outdoor environments. Camden switches are versatile, and can be supplied in various configurations and finishes, to suit any commercial, industrial, or residential application.

5502 Timberlea Blvd. Mississauga, ON Canada L4W 2T7 • Toll Free: 1 877 226-3369 (CAMDEN9)
Tel: (905) 366-3377 • Fax: (905) 366-3378 • E-mail: info@camdencontrols.com • www.camdencontrols.com

4 1/2" SQUARE ALL - ACTIVE SWITCHES

ARCHITECTS/ENGINEERS SPECIFICATIONS

The switches to be used throughout the complex shall be Camden Door Controls CM-45, CM-46 or CM-46CB series all-active switches.

The switches shall be easy-to-activate, ADA compliant, 4-1/2" square. Switches shall be all-active, whereby pressing any part of the faceplate will activate the device. Faceplates shall be constructed of stainless steel or aluminum. Switches shall use plastic spacers and rubber dampers for noise reduction. Switches shall be rated at a minimum of 15 amps @ 30 VDC.

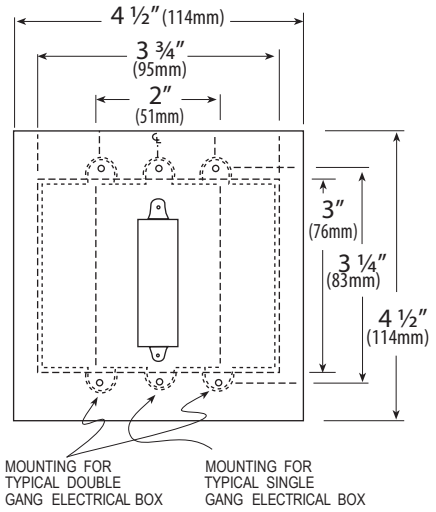

CM-45/46

ORDERING INFORMATION

All CM-45/46 series all-active switches are complete ready-to-install assemblies. CM-45 series are supplied with stainless steel Allen screws and an Allen wrench for mounting. CM-46 series are supplied with stainless steel tamperproof screws.

MODEL	DESCRIPTION
CM-45	4-1/2" SQUARE PUSH PLATE SWITCH, CONCEALED SCREWS
CM-46	4-1/2" SQUARE PUSH PLATE SWITCH, EXPOSED SCREWS
CM-46CB	BLUE 4-1/2" SQUARE PUSH PLATE SWITCH, EXPOSED SCREWS. AVAILABLE WITH GRAPHIC OPTION '/1' (BLANK), '/2' (WHEELCHAIR), AND '/4' (WHEELCHAIR + 'PUSH TO OPEN') ONLY.

OPTIONS

(Add suffix to model above)

FACEPLATE GRAPHIC OPTIONS

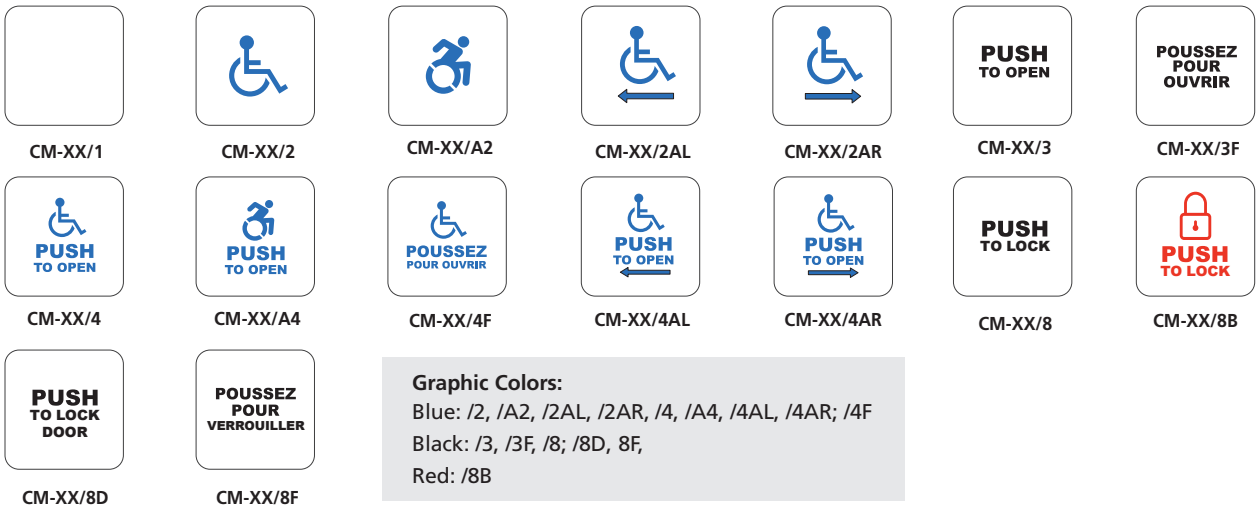

CM-XX/1 CM-XX/2 CM-XX/A2 CM-XX/2AL CM-XX/2AR CM-XX/3 CM-XX/3F

CM-XX/4 CM-XX/A4 CM-XX/4F CM-XX/4AL CM-XX/4AR CM-XX/8 CM-XX/8B

CM-XX/8D CM-XX/8F

Graphic Colors:
Blue: /2, /A2, /2AL, /2AR, /4, /A4, /4AL, /4AR; /4F
Black: /3, /3F, /8; /8D, 8F,
Red: /8B

ARCHITECTURAL FINISHES: (NOT APPLICABLE TO THE CM-46CB SWITCH)

CM-XXX-AB	ADD 'AB' TO PRODUCT # FOR ANTIQUE BRASS FINISH (BHMA 609, US5)
CM-XXX-SB	ADD 'SB' TO PRODUCT # FOR SATIN BRASS FINISH (BHMA 606, US4)
CM-XXX-OB	ADD 'OB' TO PRODUCT # FOR OIL RUB BRONZE FINISH (BHMA 640, US10B) (NOT COLOR MATCHED) (CANNOT BE CUSTOM LASER ETCHED)
CM-XXX-PB	ADD 'PB' TO PRODUCT # FOR POLISHED BRASS (BHMA 605, US3)

WEATHERPROOF OPTIONS:

CM-XXX-WT	ADD 'WT' TO PRODUCT # FOR BOOT AND WATER TIGHT COATING

CONTACT OPTIONS:

DP: ADD DP TO PRODUCT # TO ORDER DPDT SWITCH INSTEAD OF SPDT SWITCH (USE SPECIAL MOUNTING PLATE/TEMPLATE)

CAMDEN DOOR CONTROLS
5502 Timberlea Blvd. Mississauga, ON Canada L4W 2T7 • Toll Free: 1 877 226-3369 (CAMDEN9)
Tel: (905) 366-3377 • Fax: (905) 366-3378 • E-mail: info@camdencontrols.com • www.camdencontrols.com
MKTG-LIT-SP-45&46_R7
BSI Certified ISO 9001: 2015
FS 541752