CAMDEN DOOR CONTROLS

eXACT

CX-ED2071 Electric Strike

Installation Instructions

This Package Includes:

- 1- ESP1B, ESP3B and ESP4B faceplates
- 4- Wire nuts
- 4- M5 x 12mm screws
- 2- #10 x 1 1/4" wood screws
- 2- Mounting brackets
- 1- Varistor

1. Description

Camden CX-ED2071 low profile Grade 2 ANSI strike for cylindrical locksets offers the very best strike quality and performance, with three stainless steel faceplates provided. The 'Universal' strike design delivers unparalleled application flexibility, fail safe/fail secure operation and mechanical adjustment of the strike body.

2. Specifications

Voltage	8/16V AC/DC
Current Draw	305mA@8V DC 190mA@8V AC 625mA@16V DC 460mA@16V AC
Static Strength	1,000 Lbs.
Dynamic Strength	50 Ft-Lbs.
Endurance	700,000 Cycles
Mode	Field Selectable Fail Safe/Fail Secure
Mech. Adjustment	Strike Body/Faceplate
Operation	AC-Buzz DC-Silent
Duty	Intermittent
Dimensions (Body)	3 3/8" H x 1 7/8" W x 1 7/32" D (86mm x 47mm x 31mm)

3. Dimensions

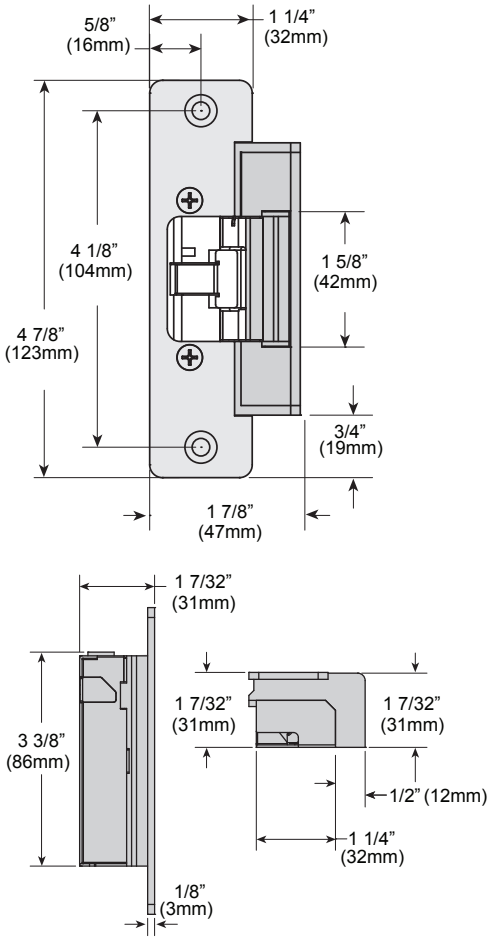

4. Installation

1. Prepare the door jamb as per the appropriate drawing.
2. Install mounting brackets to jamb using M5x12 screws and pressed metal nuts. Do not tighten.
3. Spacers are used to assure flush final assembly of faceplate into jamb. Add one of more spacers between jamb and mounting bracket when face plate extends beyond the jamb. When the faceplate sits inside the jamb, spacers must be added between the mounting bracket & the lip bracket. Make sure clearance hole in spacer aligns with hole in mounting bracket.
4. Connect wires coming from the low voltage side of the transformer to wires (black) from strike.
5. Install electric strike jamb by attaching with # 10-32 screws and lockwashers.
6. Secure M5x12 screws holding mounting brackets to jamb.

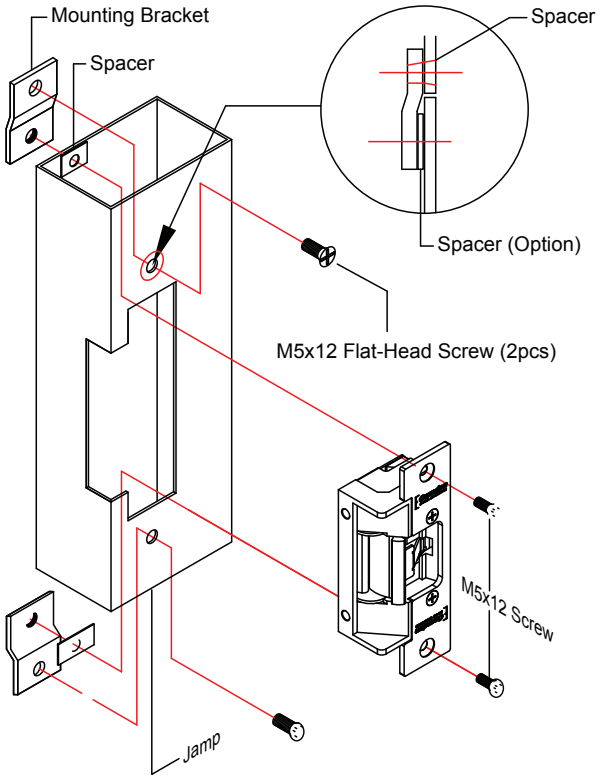

Vertical Centerline

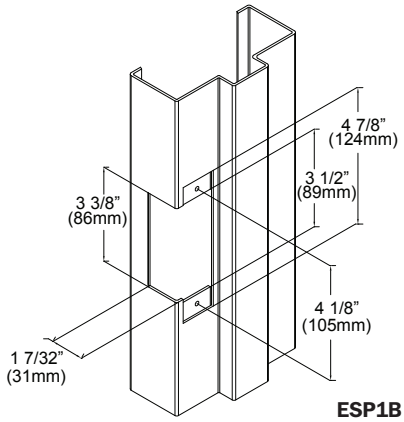

ESP1B + ESP2B

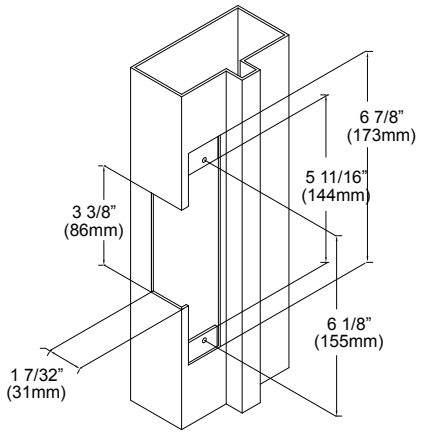

ESP3B

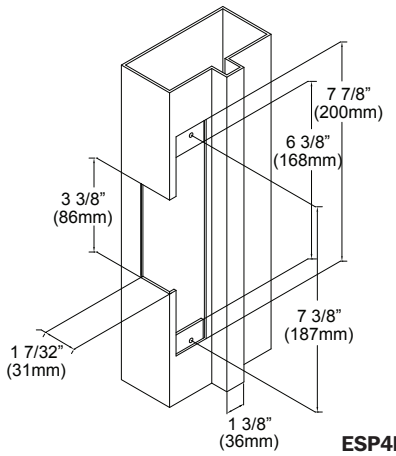

ESP4B

Note: The products are intended to be installed in accordance with the installation wiring diagram, mechanical assembly drawings provided with each product, the local authority having jurisdiction (AHJ) and the National Electric Code, NFPA 70. When installed in fail secure mode, the local authority shall be consulted with regard to the use of possible panic hardware to allow emergency exit from the secure area.

The electric door strike shall be installed in such a way and in such a location so as to not impair the operation of an emergency exit device or panic hardware mounted on the door.

5. Connections

POWER
8/16V AC/DC
Red: Power in
Red: Power in

A varistor is provided to protect/prevent strike from spikes. Connect varistor between input wires.

Note: The door strikes are to be powered via a class 2 power limit output from a control panel or power supply that is UL listed to UL Burglar Alarm/Access control standards.

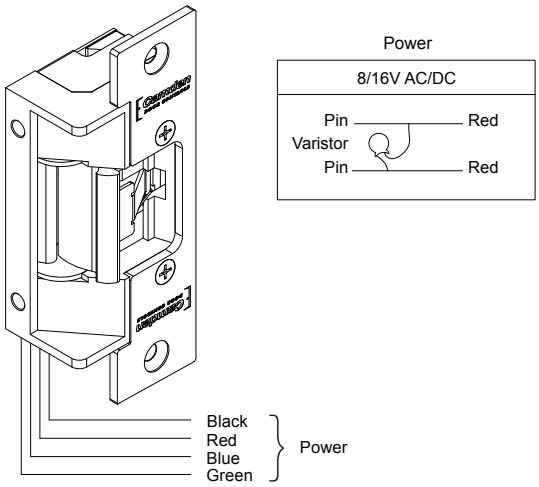

6. Operation

How to modify fail-safe to fail-secure or vice versa.

(1). Loosen the screw as per the product diagram below.

(2). Rotate the set plate 180° and slide the plate until it is properly seated.

(3). Tighten the screw.

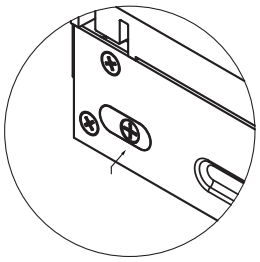

Fail Safe

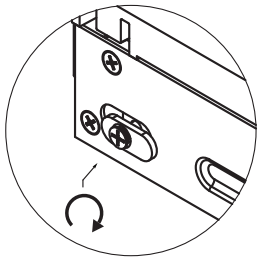

Changing

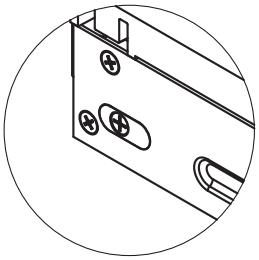

Fail Secure

7. Faceplates

INCLUDED IN PACKAGE

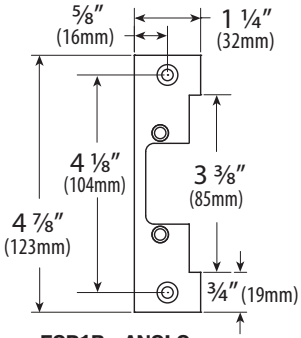

ESP1B - ANSI Square

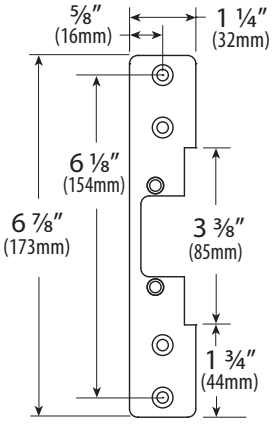

ESP3B - Hollow Metal Door

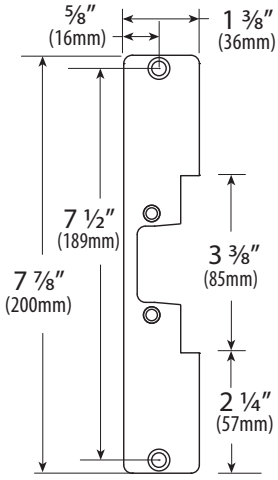

ESP4B - Wood Door

ADDITIONAL FACEPLATE

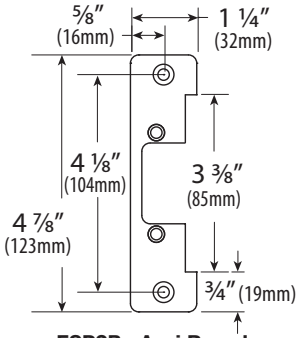

ESP2B - Ansi Round

Push Buttons

Keypads

Strikes

Magnetic Locks

Key Switches

Relays & Timers

Access Control

CAMDEN DOOR CONTROLS
5502 Timberlea Blvd.,
Mississauga, ON Canada
L4W 2T7
www.camdencontrols.com
Toll Free: 1.877.226.3369

File: CX-ED2071 Designer Installation Instructions.indd R3
Revision: 29/11/2022
Part No.: 40-82B210