CAMDEN MOUNTING BOXES

FEATURES

- THE INDUSTRY'S LARGEST ASSORTMENT OF MOUNTING BOXES, ESCUTCHEONS, TRIM PLATES AND SLEEVES.
- SOLUTIONS FOR SURFACE AND FLUSH MOUNTING, INDOOR, OUTDOOR AND WATER TIGHT APPLICATIONS.
- FLAME AND IMPACT RESISTANT POLYMER (ABS) MODELS.
- HEAVY GAUGE STAINLESS AND ALUMINUM MODELS.

NARROW/JAMB MOUNTING BOXES

MODEL: CM-23

Size: Narrow/Jamb width

Type: Surface mount box

Construction: Flame and Impact resistant black polymer (ABS)

Application: Indoor/outdoor, wired

For Switch Series:
CM-25, CM-250, CM-310

Cover Plate: CM-23CP

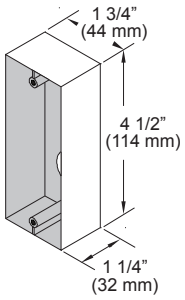

MODEL: CM-23D

Size: Narrow/Jamb width, extra depth

Type: Surface mount box

Construction: Flame and impact resistant black polymer (ABS)

Application: Indoor/outdoor, wired. Required for wireless.

For Switch Series:
CM-25, CM-170,CM-250, CM-310, CM-325/N, CM-2200

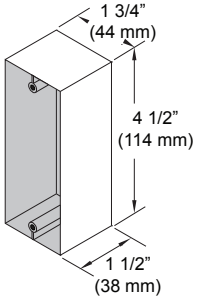

SINGLE GANG MOUNTING BOXES

MODEL: CM-34AL

Size: Single gang, std. depth

Type: Surface mount box, threaded conduit entry

Construction: Heavy duty cast aluminum

Application: Water tight, wired

For Switch Series:
CM-35, CM-180, CM-195, CM-280, CM-300, CM-325, CM-400, CM-4000, CM-5000, CM-700, CM-1100, CM-1200, supplied with CM-1000 Series

Gasket: CM-120G

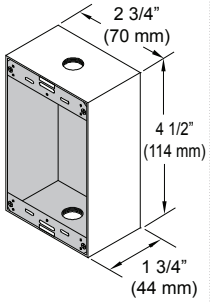

MODEL: CM-34BL

Size: Single gang, std. depth

Type: Surface mount box

Construction: Double wall, black (ABS)

Application: Indoor, wired or wireless

For Switch Series:
CM-35, CM-180, CM-195, CM-280, CM-300 CM-324, CM-325, CM-400, CM-700, CM-1200

Gasket: CM-120G

Cover Plate: CM-34CP

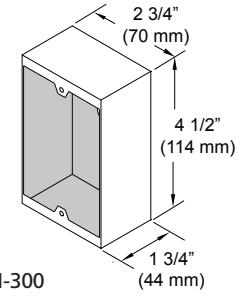

MODEL: CM-34D

Size: Single gang, extra depth

Type: Surface mount box

Construction: Heavy duty grey polymer

Application: Indoor/outdoor, wired. Required for wireless

For Switch Series:
CM-30, CM-3000, CM-4085/5085/7085/8085

Gasket: CM-120G

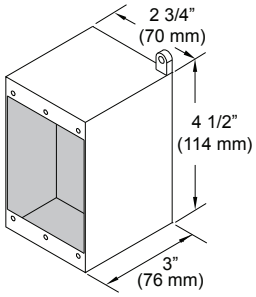

MODEL: CM-31

Size: Single gang

Type: Sleeve for standard 2" x 4" surface electrical box

Construction: Heavy gauge stainless steel

Application: Adds brushed SS finish to standard electrical box

For Switch Series:
CM-35, CM-180, CM-195, CM-280, CM-300, CM-324, CM-325, CM-1200

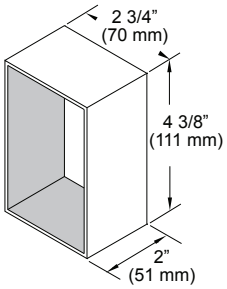

5502 Timberlea Blvd. Mississauga, ON Canada L4W 2T7 • Toll Free: 1 877 226-3369 (CAMDEN9)
Tel: (905) 366-3377 • Fax: (905) 366-3378 • E-mail: info@camdencontrols.com • www.camdencontrols.com

MODEL: CM-66

Size: Single gang, standard depth

Type: 7" x 7" dress plate and standard 2" x 4" flush electrical box

Construction: Heavy gauge stainless steel

Application: Extra wide trim plate c/w box to cover double gang sized openings

For Switch Series:
CM-35, CM-40, CM-41, CM-45, CM-60

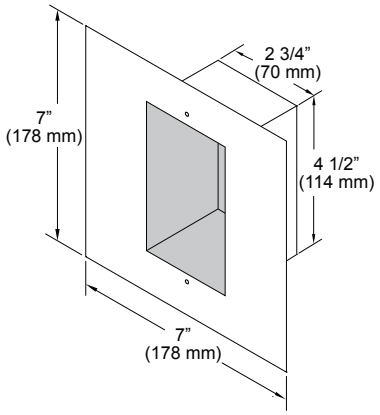

DOUBLE GANG/SQUARE MOUNTING BOXES - SURFACE

MODEL: CM-43CBL/CBLA

Size: 5" Square, std. depth

Type: Surface mount box

Construction: Flame and impact resistant black polymer (ABS)

Application: Indoor/outdoor, wired. Required for wireless.

Cover Plate: CM-43CP

For Switch Series:
CM-41, CM-45, CM-46

CM-43CBLA: Surface Box for CM-324 / 325 / 330W switches

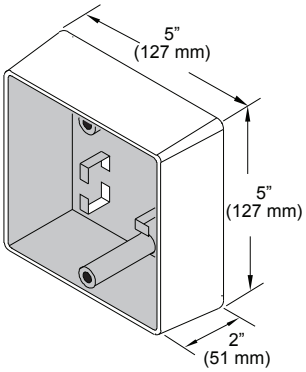

MODEL: CM-53

Size: 5" Square, std. depth

Type: Surface mount box

Construction: Flame and impact resistant black polymer (ABS)

Application: Indoor/outdoor, for double gang switches and vestibule switches.

For Switch Series:
CM-500, CM-2510, CM-2520, CM-3200, CM-3500

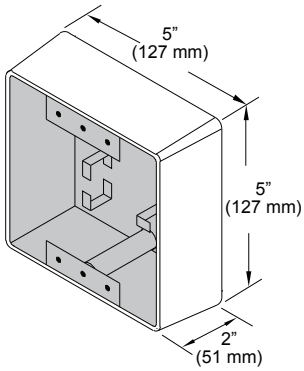

MODELS: CM-54B/54GR

Size: 5 1/4" Square, std. surface depth

Type: AURA™: Illuminated surface box

- CM-54B: Blue only

- CM-54GR: Green/Red

Construction: Flame and impact resistant black polymer (ABS)

Application: Surface 4 1/2" square push plate switch enclosure, room for wireless

For Switch Series:
CM-45, CM-46,
SPDT models only

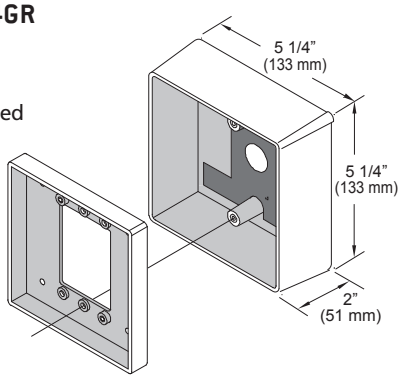

MODEL: CM-63CBL

Size: 5" Square, std. depth

Type: Surface mount box,

Construction: Flame and impact resistant black polymer (ABS)

Application: Indoor/outdoor, wired. Required for wireless.

For Switch Series:
CM-41, CM-60, CM-3200

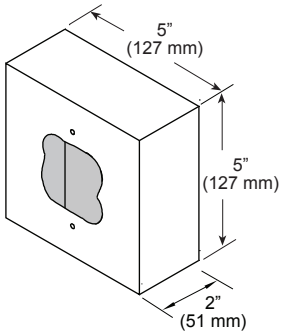

MODEL: CM-540B

Size: Double gang, shallow

Type: Semi flush mount box

Construction: Flame and impact resistant black polymer (ABS)

Application: Indoor/outdoor, wired

For Switch Series:
CM-41, CM-45, CM-46

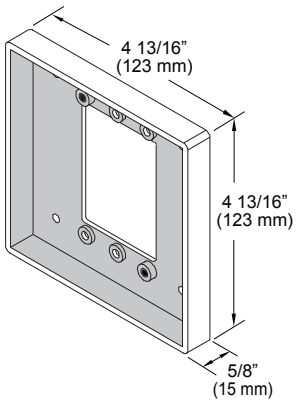

MODEL: CM-48AL

Size: Double gang, shallow

Type: Surface mount box

Construction: Anodized aluminum

Application: Indoor/outdoor, wired.

For Switch Series:
CM-41, CM-45, CM-46
(Requires CM-49C adaptor plate, sold separately)

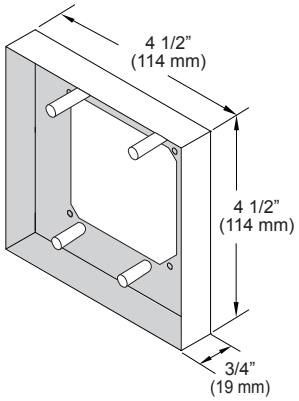

MODEL: CM-44

Size: Double gang, shallow

Type: Offset surface mount box

Construction: Stainless steel

Application: For mounting 4 1/2" square switches on narrow jambs, indoor/outdoor, wired.

For Switch Series:
CM-41, CM-45, CM-46

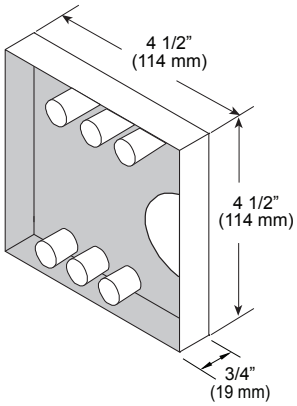

MODEL: CM-68AL/BZ

(Anodized Aluminum finish)
CM-68BZ (Anodized dark bronze finish)

Size: Double gang, shallow

Type: Surface mount box

Construction: Anodized aluminum

Application: Indoor/outdoor, wired

For Switch Series:
CM-60 (Requires CM-49C adaptor plate, sold with switch)

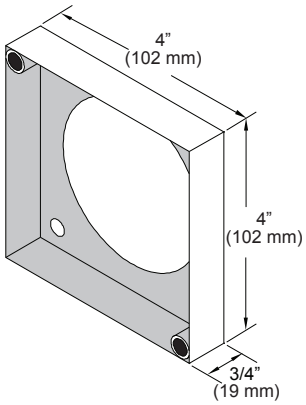

MODEL: CM-67

Size: Double gang

Type: Sleeve for standard 4" x 4" surface electrical box

Construction: Heavy gauge stainless steel

Application: Adds brushed SS finish to standard electrical box

For Switch Series:
CM-41, CM-45,
CM-46, CM-60

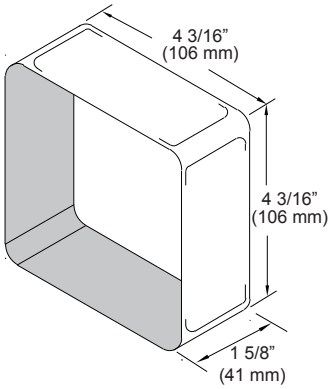

MODEL: CM-440

Size: Double gang

Type: 5" flush dress plate

Construction: Stainless steel

Application: For mounting 4 1/2" round switch on standard single and double gang electrical box

For Switch Series:
CM-40

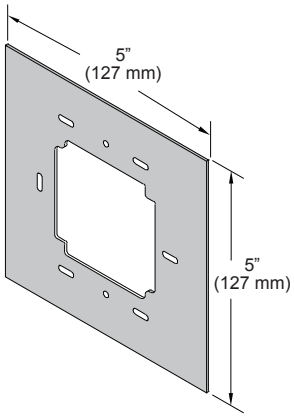

MODEL: CM-660

Size: Double gang

Type: 6 1/2" flush dress plate

Construction: Stainless steel

Application: For mounting switches on standard single, double gang and 4" square electrical boxes

For Switch Series:
CM-45, CM-46, CM-60

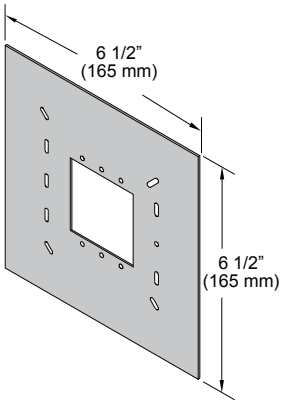

MODEL: CM-49C

Size: Double gang

Type: Adapter plate

Construction: Galvanized steel

Application: For mounting CM-41, CM-45, CM-60 switches on double gang and 4" square mounting boxes

For Switch Series:
CM-45, CM-46
(included with CM-60)

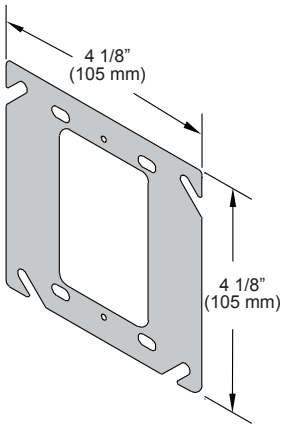

DOUBLE GANG/SQUARE MOUNTING BOXES - FLUSH

MODEL: CM-55B/55GR

Size: 6 1/2" Square, flush

Type: AURA™: Illuminated flush box

- CM-55B: Blue only

- **CM-55GR:** Green/Red

Construction: Flame and impact resistant black polymer (ABS)

Application: Flush 4 1/2" square push plate switch enclosure, room for wireless

For Switch Series:
CM-45, CM-46, SPDT models only

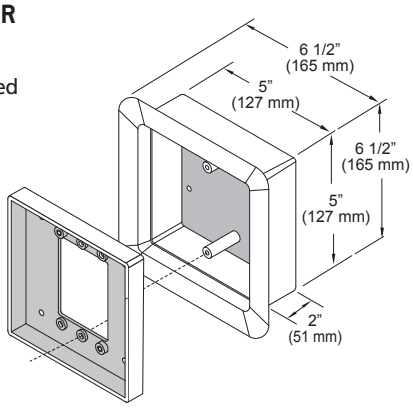

MODEL: CM-55CBL

Size: 6 1/2" Square, flush

Type: Flush mount box, 2 pcs.

Construction: Flame and impact resistant black polymer (ABS)

Application: Indoor/outdoor

For Switch Series:
CM-45, CM-46,
SPDT models only

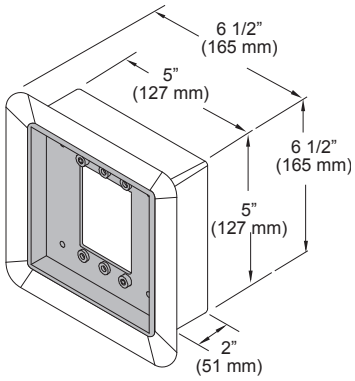

4 1/2" ROUND MOUNTING ENCLOSURES - SURFACE

MODEL: CM-47S

Size: 5" round, std.depth

Type: Surface mount box

Construction: Flame and impact resistant black polymer (ABS)

Application: Indoor/outdoor, wired or wireless

For Switch Series: CM-40

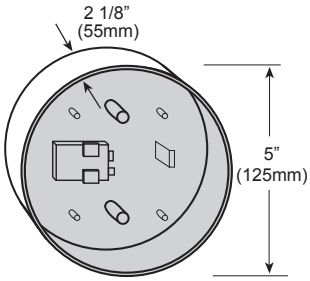

MODEL: CM-570B

Type: 4 11/16" semi-flush mounting box

Construction: Flame and Impact resistant black polymer (ABS)

Application: Indoor/outdoor, wired

For Switch Series: CM-40

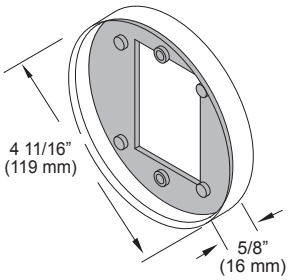

MODEL: CM-59S

Size: 7 3/4" round, std. depth

Type: Surface mount escutcheon

Construction: Heavy gauge stainless steel

Application: Vandal resistant indoor/outdoor, wired.

For Switch Series: CM-40

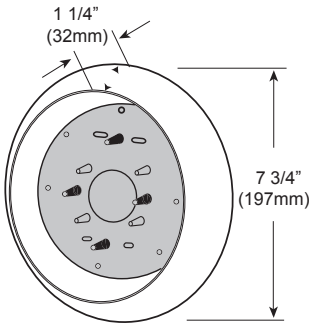

MODEL: CM-49

Size: 8 3/4" round, 1 13/16" depth

Type: 2 pcs. surface or semi flush. Gasket and adapter plate included

Construction: Flame and impact resistant black polymer (ABS)

Application: Indoor/outdoor wired or wireless

- **CM-49A:** Semi flush on single gang electrical box
- **CM-49B:** Surface must be used with CM-49A
- **CM-49C:** Adapter plate for double gang and 4" square box
- **CM-49G:** Gasket

For Switch Series: CM-40

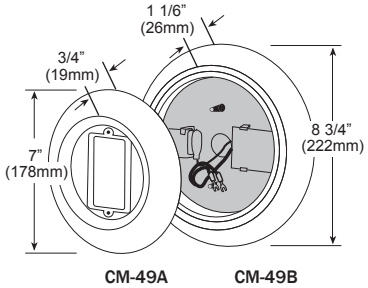

4 1/2" ROUND MOUNTING ENCLOSURES - FLUSH

MODEL: CM-57GR

Size: 6 5/8" Round, flush

Type: AURA™ Illuminated flush box

Construction: Flame and Impact resistant black polymer (ABS)

Application: Flush 4 1/2" round push plate switch enclosure, room for wireless

For Switch Series: CM-40, SPDT models only

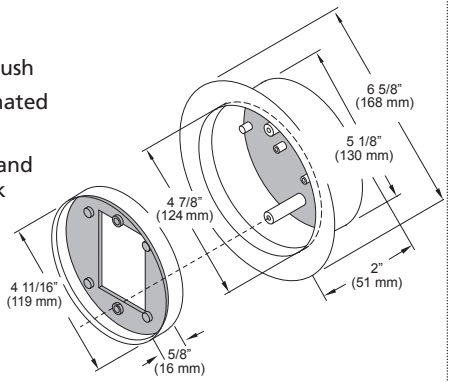

MODEL: CM-57CBL

Size: 6 5/8" Round, flush

Type: Flush mount box, 2 pcs.

Construction: Flame and impact resistant black polymer (ABS)

Application: Indoor/outdoor

For Switch Series: CM-40, SPDT models only

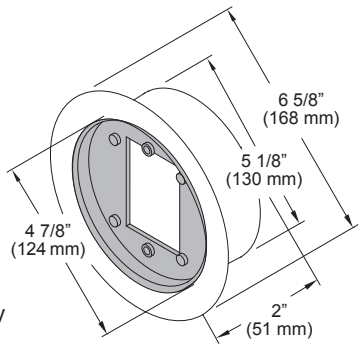

6" ROUND MOUNTING ENCLOSURES - SURFACE

MODEL: CM-69S

Size: 6 1/2" round, std. depth

Type: Surface mount box

Construction: Flame and impact resistant black polymer (ABS)

Application: Indoor/outdoor, wired or wireless

For Switch Series: CM-60

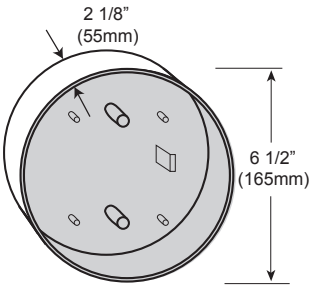

MODEL: CM-89S

Size: 9 5/8" round, std. depth

Type: Surface mount escutcheon

Construction: Heavy gauge stainless steel

Application: Vandal resistant indoor/outdoor, wired.

For Switch Series: CM-60

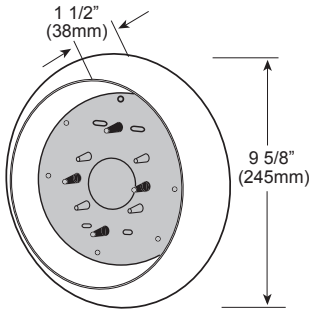

MODEL: CM-79

Size: 9 5/8" round, 1 13/16" depth

Type: 2 pcs. surface and semi flush mount escutcheon, gasket and adapter plate included

Construction: Flame and impact resistant black polymer (ABS)

Application: Vandal resistant indoor/outdoor

- **CM-79A:** Semi flush mounting on single gang electrical box, wired
- **CM-79B:** Surface mount. Wired or wireless. Must be used with CM-79A
- **CM-79C:** Adapter plate to mount CM-79A on double gang and 4" square electrical box
- **CM-79G:** Gasket for CM-79A or CM-79B
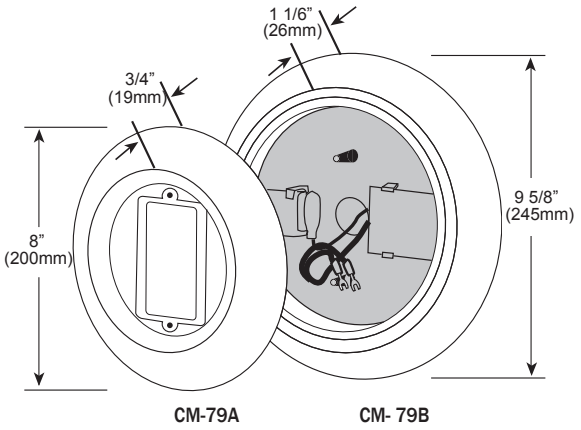
For Switch Series: CM-60