CM-7000 & CM-7100 Series Exit Switches

INSTALLATION INSTRUCTIONS

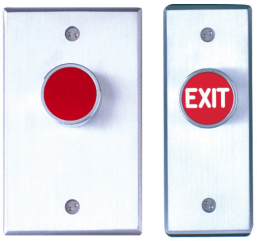

CM-7000 CM-7100

THIS PACKAGE INCLUDES:

(1) 1" (25mm) diameter red or green Push button.

(1) Single Gang Die-cast Aluminum Faceplate.

(1) Normally open and/or Normally closed Contact block.

1. GENERAL DESCRIPTION

Camden Door Controls 7000 Series low profile exit switches are vandal resistant; designed and manufactured to meet the stringent demands of exit controls. They are supplied with a 1/4" thick heavy duty brushed aluminum plate, in 1 3/4" or 2 3/4" widths. Optional duranodic (US 40) finish is also available. CM-7000 Series Recessed Buttons are specially designed to limit accidental activation, and to provide protection from vandalism. This is achieved by having the button recessed inside a metal housing. The ultra low-profile design protrudes less than 3/4" from the wall. The switches are UL/CSA approved, rated at 10 amps. The design of the Camden Exit Button is modular, so contacts can be stacked to control up to six distinct functions simultaneously. Optional 1-60 second pneumatic timer can be added instead of contact blocks. Timer features 6-amp DPST (N/O and N/C) contacts. Camden Switches provide an economical, practical, attractive method to control electrical devices.

2. SPECIFICATIONS

Voltage	12/24 VDC
Contact Rating	6A @ 30 VDC
Temperature Range	-13°F to 158°F (-25°C to 75°C)
Timer Life:	100,000 cycles
Switch Type	Momentary
Standard Finish	Brushed Aluminum
Dimensions	**CM-7000:** 4 ½" H x 2 ¾" W x 1 ¾" D (114mm X 70mm x 44mm) **CM-7100:** 4 ½" H x 2 ¾" W x 1 ¾"D (114mm X 70mm x 44mm)

3. APPLICATION

The CM-7000 Series Exit Switches are ideal for high traffic areas, such as store and building front entrances, and exits. They can be surface, flush, or mullion (narrow) mounted. Easily visible, they are available with single gang (2 3/4"), or narrow (1 3/4") mounting plates. Camden Exit Switches are designed to control overhead doors, electric locks, electro-magnetic locks, electric strikes, automatic doors, and handicap operators. They may also be used for motor control, shunting, bypassing alarms, request to exit, timed functions, and many other applications. The switches are made for high frequency usage, in an indoor or outdoor environment. Camden Exit Switches are versatile, and are supplied in various configurations to suit commercial, industrial, and residential applications.

4. INSTALLATION

The CM-7000 series contact block is a SPST (Single Pole Single Throw) or a DPST (Double Pole Single Throw). It can be ordered with either a Normally Open or Normally Closed contact block. Each contact block is color coded. A contact block with a green actuator is Normally Open, where the red actuator is Normally Closed. Both types are available in a Momentary configuration.

The CM-7000 series comes with one contact block but can easily have three attached across the back of the button. If the application calls for more than three functions to happen on activation, then each contact block can be stacked with another doubling the number of functions on activation.

Installation is very simple by inserting the wiring into the top and the bottom of the contact block and securing them with the two screw terminals.

Each contact block has its screw terminals numbered so that the provided diagrams can be followed with ease and clarity. The CM-7000 Series are supplied with a 1-3/4" brushed aluminum faceplate for door jamb mounting and can be easily be mounted to a single gang electrical box.

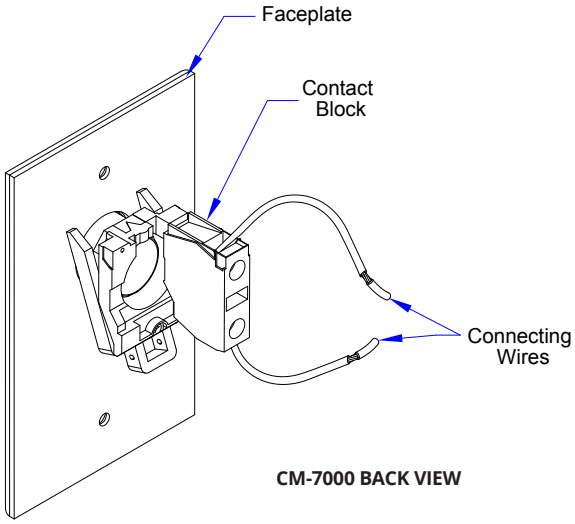

CM-7000 BACK VIEW

5. WIRING

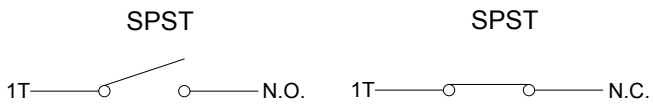

Momentary: When the switch is pressed the current pole will change to the opposite state until released.

Maintained: When the switch is pressed it will provide the opposite pole until the button is pressed again

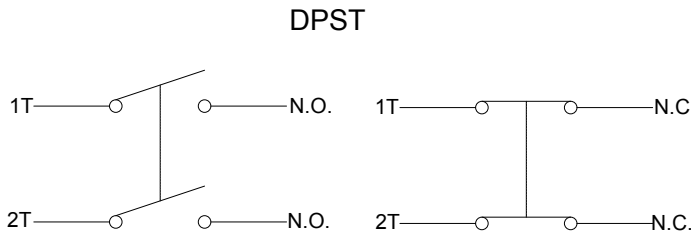

Momentary: When the switch is pressed it will provide a change of state on both of the N.O. & N.C. poles until released

WIRING LAYOUT & COLOR CODING		
SWITCH TYPE	**N.O.**	**N.C.**
COMMON	BLACK	BLACK
NORMALLY OPEN	BLACK	
NORMALLY CLOSED		BLACK

6. CM-7000 SERIES FRONT AND SIDE VIEW

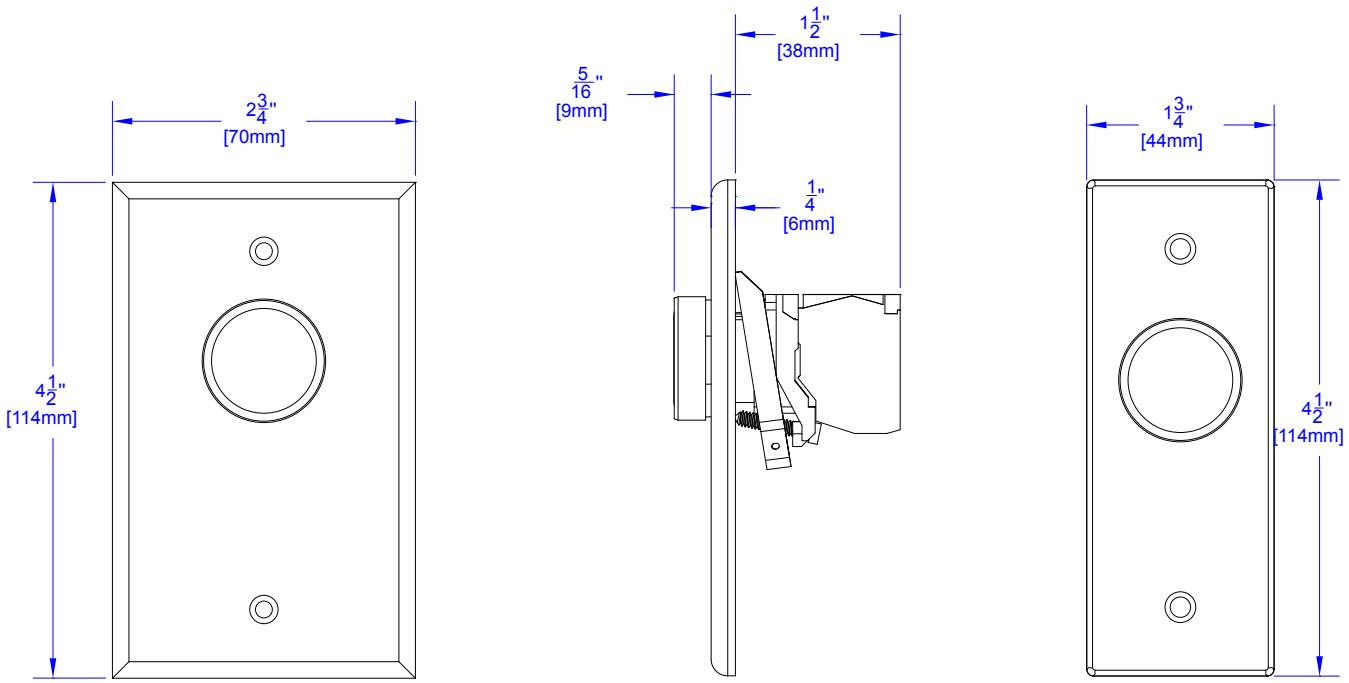

7. PARTS INFORMATION

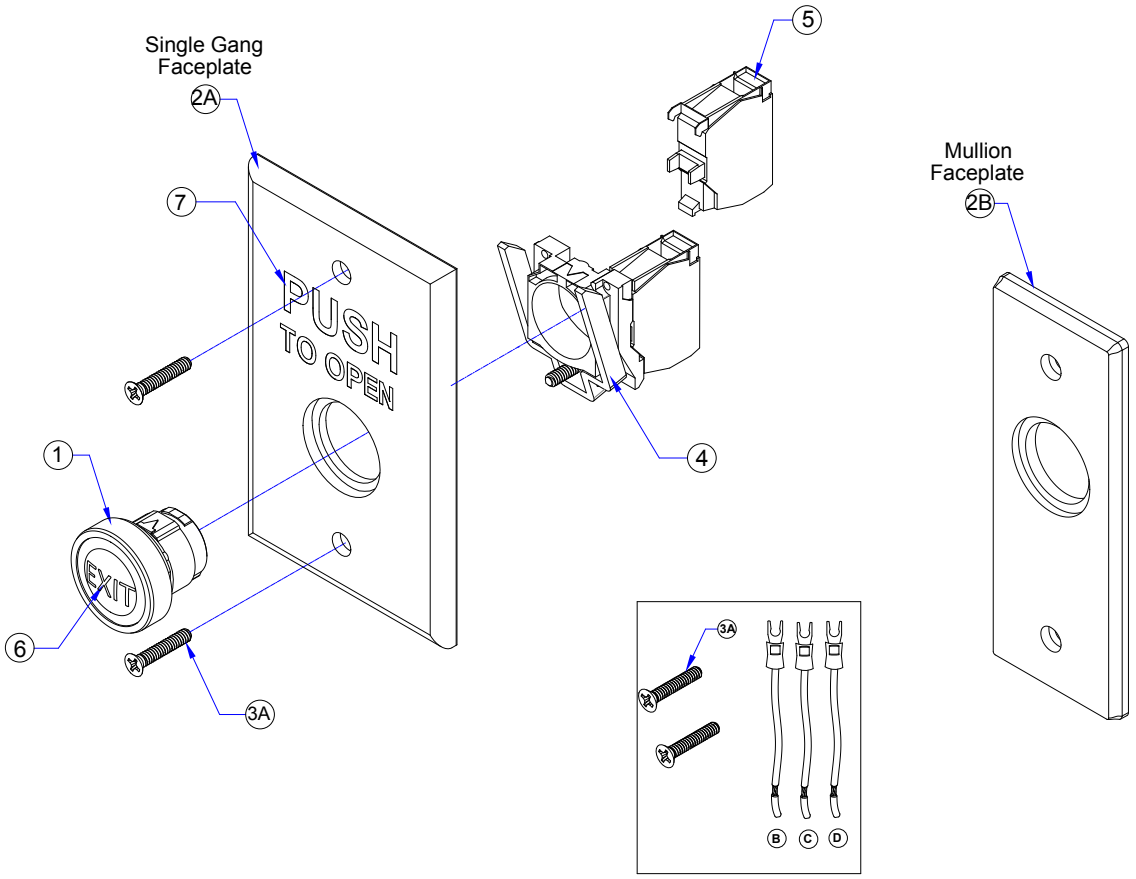

ORDERING INFORMATION FOR REPLACEMENT PARTS			
ITEM NUMBER	**PART NUMBER**		**DESCRIPTION**
1	60-66A014		RED MOMENTARY PUSH BUTTON (DIA. 1”)
	60-66A015		GREEN MOMENTARY PUSH BUTTON (DIA. 1”)
2	A	60-41A003	DIE-CAST ALUMINUM SINGLE GANG FACE PLATE 4 1/2”H x 2 3/4”W x 1 3/4”D (114mm x 70mm x 44mm)
	B	60-41A004	DIE-CAST ALUMINUM MULLION FACE PLATE 4 1/2”H x 1 3/4”W x 1 3/4”D (114mm x 44mm x 44mm)

PARTS KIT		
ITEM NUMBER	**PART NUMBER**	**DESCRIPTION**
3.	**FOR N-C & N-O CONTACTS**	(A) 6-32 x 3/4 FLAT HEAD PHILLIPS ZINC PLATED SCREW
	60-34B024	(B) 6” ORANGE WIRE WITH INSULATED SPADE CONNECTOR (C) 6” BLUE WIRE WITH INSULATED SPADE CONNECTOR (D) 6” BLUE WIRE WITH INSULATED SPADE CONNECTOR
	FOR N-O CONTACTS	(A) 6-32 x 3/4 FLAT HEAD PHILLIPS ZINC PLATED SCREW
	60-34B025	(B) 6” BLUE WIRE WITH INSULATED SPADE CONNECTOR (C) 6” GREY WIRE WITH INSULATED SPADE CONNECTOR
	FOR N-C CONTACTS	(A) 6-32 x 3/4 FLAT HEAD PHILLIPS ZINC PLATED SCREW
	60-34B026	(B) 6” ORANGE WIRE WITH INSULATED SPADE CONNECTOR (C) 6” GREY WIRE WITH INSULATED SPADE CONNECTOR

CONTACT OPTIONS

ITEM NUMBER	MODEL NUMBER		QTY	DESCRIPTION
	SINGLE GANG	MULLION		
4.	CM-7000	CM-7100	1	NORMALLY OPEN CONTACT BLOCK, SPST
	CM-7010	CM-7110	1	NORMALLY CLOSED CONTACT BLOCK, SPSY
	CM-7020	CM-7120	1	NORMALLY OPEN & NORMALLY CLOSED CONTACT BLOCK, DPST

INDIVIDUAL CONTACT OPTIONS

ITEM NUMBER	PART NUMBER	QTY	ITEM NUMBER
5.	60-66C000	1	NORMALLY OPEN CONTACT BLOCK
	60-66C001	1	NORMALLY CLOSED CONTACT BLOCK
	60-66C002	1	NORMALLY CLOSED CONTACT AND NORMALLY OPEN BLOCK

BUTTON ENGRAVED (IN WHITE) OPTIONS

ITEM NUMBER	MODEL NUMBER	DESCRIPTION
6.	CM-xxxE	EXIT
	CM-xxxS	SORTIE
	CM-xxxSA	SALIDA

FACE PLATE ENGRAVED (IN BLACK) OPTIONS

ITEM NUMBER	MODEL NUMBER	DESCRIPTION
7.	CM-xxx/3	PUSH TO OPEN
	CM-xxx/3F	POUSSEZ POUR OUVRIR
	CM-xxx/3S	EMPUJE PARA ABRIR
	CM-xxx/7	PUSH TO EXIT
	CM-xxx/7F	POUSSEZ POUR SORTIR
	CM-xxx/8	PUSH TO LOCK

COMPATIBLE MOUNTING BOXES OPTION

ITEM NUMBER	PART NUMBER	DESCRIPTION
8.	CM-34AL	SURFACE MOUNT BOX WITH STANDARD DEPTH AND THREADED CONDUIT ENTRY. HEAVY DUTY CAST ALUMINUM 4-1/2"W X 2-3/4"H X 1-3/4"D [144MM X 70MM X 47MM]
	CM-66	FLUSH BOX & DRESS PLATE, STANDARD DEPTH BOX WITH 7'' X 7'' DRESS PLATE HEAVY GAUGE STAINLESS STEEL
	CM-31	SLEEVE COVER FOR STANDARD 2 3/4" X 4 1/4" (69MM X 110MM) SURFACE ELECTRICAL BOX. HEAVY GAUGE STAINLESS STEEL
	CM-CPC1	VANDAL AND WEATHER RESISTANT CLEAR LIFT COVER
	CM-34BL	SINGLE GANG BLACK ABS BOX, SURFACE MOUNT 2 7/8"W X 4 1/2"H X 1 3/4"D (73MM X 117MM X 44MM)
	CM-34D	SINGLE SURFACE BOX, EXTRA DEPTH
	FOR CM-7100 NARROW SERIES	
	CM-23D	SURFACE BOX WITH EXTRA DEPTH. FLAME AND IMPACT RESISTANT BLACK POLYMER (ABS) 1 3/4" W X 4 1/2"H x 1 1/2"D (46mm x 117mm x 43mm)