Door Activation Devices

CM-45, CM-46 and CM-46CB Series Push Plate

INSTALLATION INSTRUCTIONS

THIS PACKAGE INCLUDES:

(1) "All Active" Push Plate
(1) Parts kit

CM-45

CM-46

CM-46CB

1. GENERAL DESCRIPTION

Camden Door Controls CM-45/46 Series all-active switches are heavy-duty,weather resistant ADA-compliant door controls. The 4 1/2" square faceplates are stainless steel or aluminum, and the assemblies are designed for easy installation. Both series mount to standard single gang or double gang electrical boxes. CM-45 series is sold as a complete assembly, which is mounted to the in-wall box (or surface box) using stainless steel Allen screws and a hex key (included with the switch). Access to the mounting screws is through small holes in the front of the faceplate. This provides for tamper resistance, while maintaining an attractive overall appearance. CM-46 series is sold as a two-part assembly. The rear assembly is mounted to the in-wall box (or surface box). The front faceplate is then screwed to the rear assembly using either standard or security screws (included with kit). The SPDT (and optional DPDT) switches are UL/CSA approved, and rated 15 amps @ 30 VDC. The push switches are offered with different graphics, and in various architectural finishes. Watertight configurations are also available

2. SPECIFICATIONS

Voltage	12/24V DC
Contact Type	SPDT FORM 'C
Switch Type	Momentary
Contact Rating	15A @ 30 VDC
Temp. Range	-40°F to 140°F (-40°C to 60°C)
Std. Finish	CM-45, CM-46: US32/630 CM-46CB: Blue Powder Coat
Dimensions	CM-45, CM-46 & CM-46CB SERIES: 4-½" H x 4-½"W x 1-⅜"D (114mm x 114mm x 34mm)

3. APPLICATION

Camden 'all-active' push plate switches are designed for areas where an easy-to activate, high-visibility switch is desired. Ideal for high-traffic areas, hospitals, wheelchair access, seniors' residences, etc. They can be surface or flush mounted.

Camden 'all-active' push plate switches are designed to control electric strikes, electromagnetic locks and automatic doors. They may also be used for shunting,bypassing alarms, request to exit, timed functions and many other applications.

The switches are made for high frequency usage for both indoor and outdoor environments. Camden switches are versatile and can be supplied in various configurations and finishes to suit any commercial, industrial or institutional application.

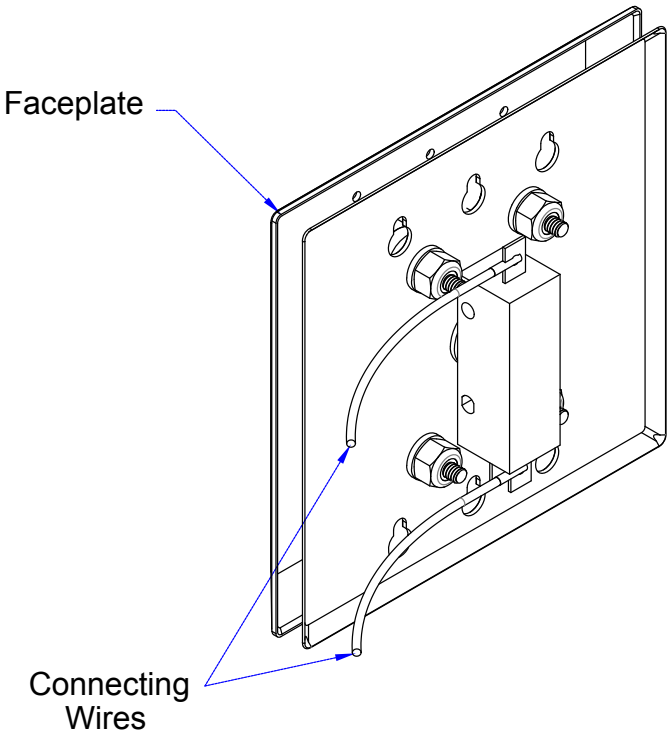

4. DIMENSIONS

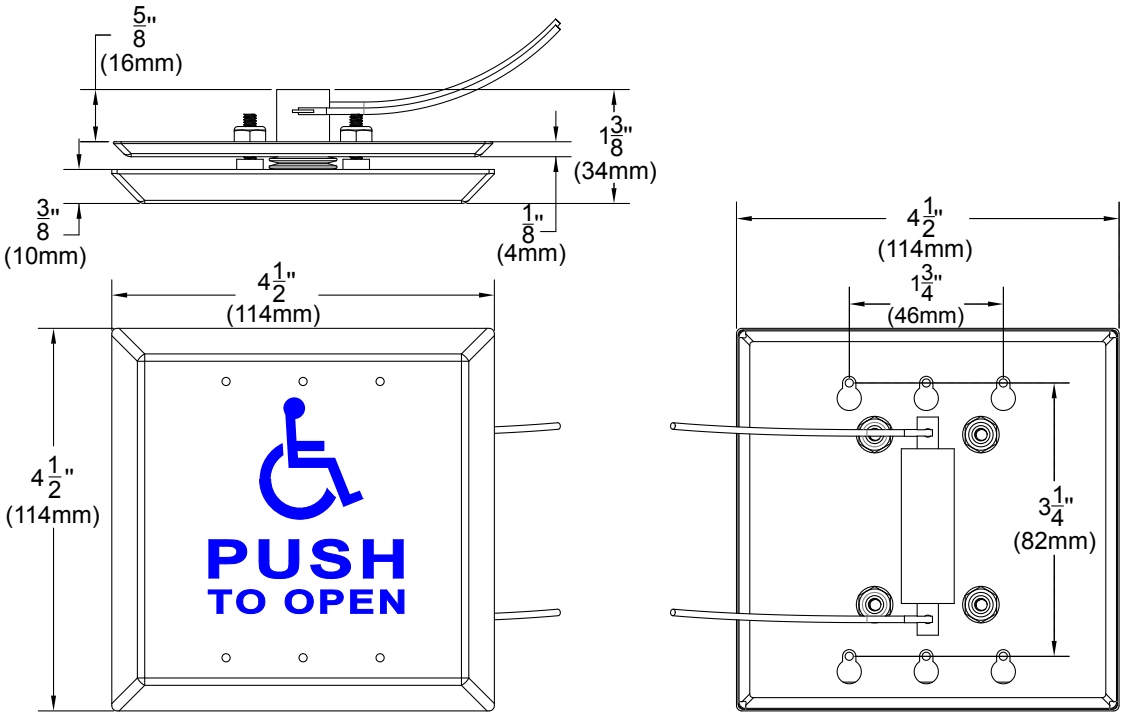

5. INSTALLATION AND WIRING

For CM-45 Models

Mounting Options:

- The CM-45 can be installed using either flush or surface mounting methods.

Selecting a Surface Mount Enclosure:

- Refer to the "Parts and Information" section (Page 5) to choose a suitable Enclosure.

Installation Process:

- Use two #6-32 x 1 - ¼" screws for surface mounting and four #6-32 x 1 - ¼" screws for flush mounting
- Insert the screws into the designated mounting holes, but do not fully tighten them at this stage.

Attaching the Switch:

- Align the CM-45 so that the screw heads slide into the slots on the back of the switch.
- Once the CM-45 is in position, proceed to secure it in place.

Securing the Switch:

- Insert the hex key into the holes on the faceplate to access and tighten the screws.

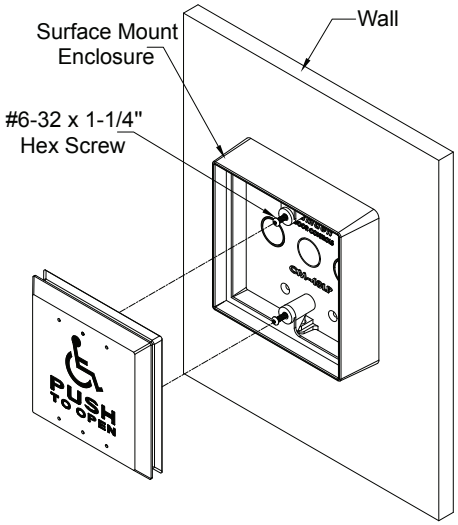

CM-45K Surface Mount

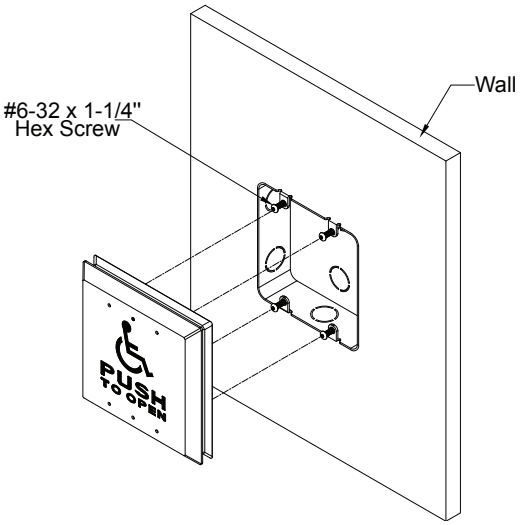

CM-45K Flush Mount

For CM-46/CM-46CB Models

Mounting Options:

- The CM-46 and CM-46CB offer flexible installation methods with options for either flush or surface mounting.

Selecting a Surface Mount Enclosure:

- Refer to the "Parts and Information" section (Page 5) to choose a suitable Enclosure.

Preparing for Installation:

- Begin by removing the #6-32 x 3/16" screws from the faceplate. These will be used later to reattach the faceplate after mounting the back plate.

Mounting the Back Plate:

- The back plate is mounted using #6-32 x 3/4" Phillips Screws.
- Position the back plate against the mounting surface or enclosure and secure it in place with the #6-32 x 3/4" Phillips Screws. Ensure these screws are tightened appropriately.

Reattaching the Faceplate:

- Once the back plate is securely mounted, align the faceplate with the back plate.
- Reattach the faceplate by inserting and tightening the #6-32 x 3/16" screws removed earlier.

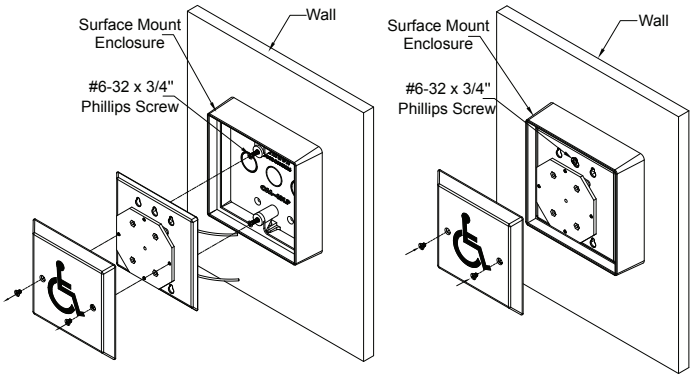

CM-46/CM-46CB Surface Mount

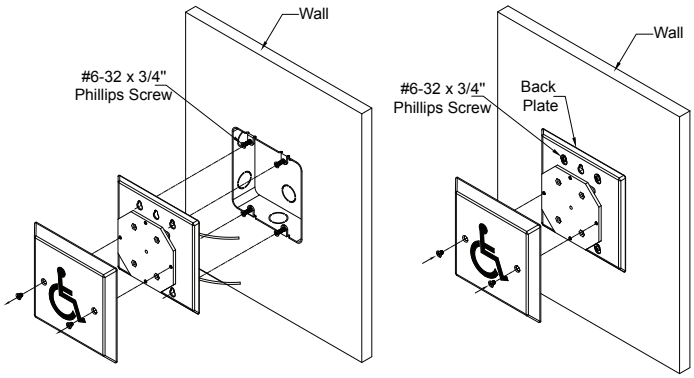

CM-46/CM-46CB Flush Mount

WIRING

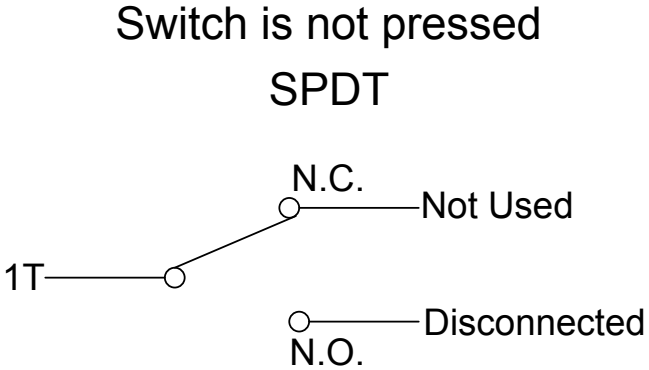

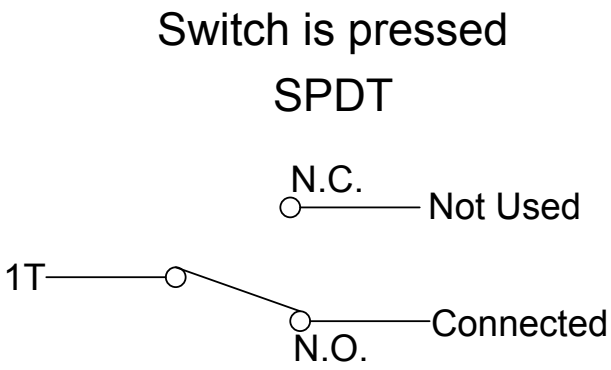

Momentary: When the switch is pressed, the current pole will change to the opposite state until released

WIRING LAYOUT				
SWITCH STATE	COM Terminal	NO Terminal	NC Terminal	Connection Status
Not Pressed	Connected	Disconnected	Not Used	No Connection
Pressed	Connected	Connected	Not Used	COM connected to NO

6.PARTS INFORMATION

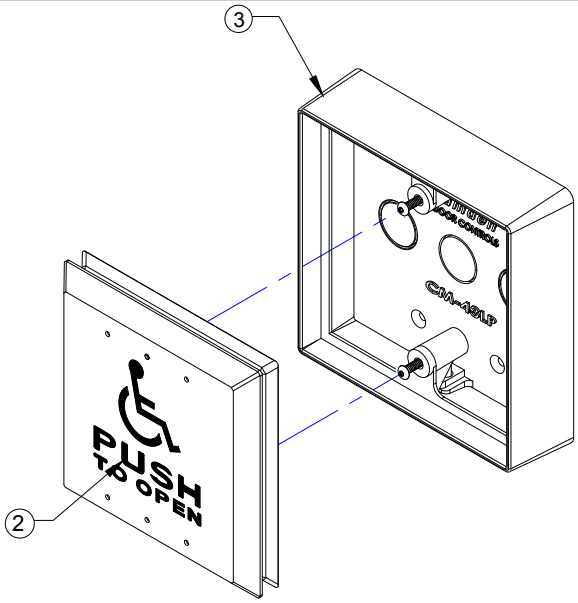

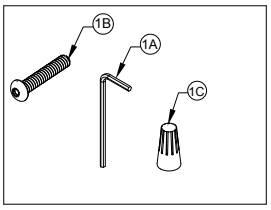

60-34B033: CM-45 Series Parts kit

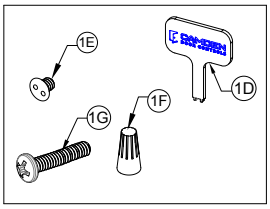

60-34B056: CM-46 Series Parts kit

MODEL NUMBERS	
MODEL NUMBER	DESCRIPTION
CM-45 SERIES	4-1/2" SQUARE PUSH PLATE SWITCH
CM-46 SERIES	4-1/2" SQUARE PUSH PLATE SWITCH, EXPOSED SCREWS
CM-46CB SERIES	4-1/2" SQUARE BLUE PUSH PLATE SWITCH, WHITE GRAPHICS, EXPOSED SCREWS

PARTS KITS		
ITEM NUMBER	PART NUMBER	DESCRIPTION
	FOR CM-45 SERIES	
1	60-34B033	(A) SMALL HEX KEYS 5/64" SHORT ARM (B) 6-32 X 1-1/4 S/S BUTT HEAD SOCKET CAP SCREW (C)GREY PLASTIC WIRE NUT C/W SPRING
	FOR CM-46 SERIES	
	60-34B056	(D) SNAKE EYE TAMPER PROOF SCREW DRIVER (E) 6-32 X 3/16" SNAKE EYE TAMPER PROOF SCREW (F) GREY PLASTIC WIRE NUT C/W SPRING (G) 6-32 x 3/4" PHILLIPS PAN HEAD SCREW

FACE PLATE GRAPHIC OPTIONS		
ITEM NUMBER	PART NUMBER	DESCRIPTION
2	CM-XX/1	BLANK STAINLESS STEEL FACEPLATE
	CM-XX/2	WHEELCHAIR LOGO IN BLUE
	CM-XX/A2	FACEPLATE WITH MAN IN ACTION LOGO IN BLUE
	CM-XX/2AL	WHEELCHAIR LOGO WITH ARROW POINTING LEFT IN BLUE
	CM-XX/2AR	WHEELCHAIR LOGO WITH ARROW POINTING RIGHT IN BLUE
	CM-XX/3	"PUSH TO OPEN" GRAPHICS IN BLACK
	CM-XX/3F	"POUSSEZ POUR OUVRIR" GRAPHICS IN BLACK
	CM-XX/4	WHEELCHAIR LOGO WITH "PUSH TO OPEN" LOGO IN BLUE

ITEM NUMBER	PART NUMBER	DESCRIPTION
2	CM-XX/A4	MAN IN ACTION LOGO WITH 'PUSH TO OPEN' LOGO IN BLUE
	CM-XX/4F	WHEELCHAIR LOGO WITH "POUSSEZ POUR OUVRIR" LOGO IN BLUE
	CM-XX/4AL	WHEELCHAIR LOGO WITH "PUSH TO OPEN AND ARROW POINTING TO THE LEFT" LOGO IN BLUE
	CM-XX/4AR	WHEELCHAIR LOGO WITH "PUSH TO OPEN AND ARROW POINTING TO THE RIGHT" LOGO IN BLUE
	CM-XX/8	"PUSH TO LOCK" LOGO IN BLACK
	CM-XX/8B	LOCK SYMBOL IN RED WITH " PUSH TO LOCK" LOGO
	CM-XX/8D	"PUSH TO LOCK DOOR" GRAPHICS IN BLACK
	CM-XX/8F	"POUSSEZ POUR VERROUILLER" GRAPHICS IN BLACK

NOTE: For CM-46CB series, all graphics are white

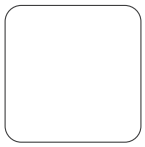
CM-XX/1

CM-XX/2

CM-XX/A2

CM-XX/2AL

CM-XX/2AR

CM-XX/3

CM-XX/3F

CM-XX/4

CM-XX/A4

CM-XX/4F

CM-XX/4AL

CM-XX/4AR

CM-XX/8

CM-XX/8B

CM-XX/8D

CM-XX/8F

COMPATIBLE MOUNTING BOXES		
ITEM NUMBER	PART NUMBER	DESCRIPTION
3	CM-43CBL	BLACK POLYMER (ABS) SURFACE BOX, STANDARD DEPTH, PROVISION FOR WIRELESS, DOUBLE WALL
	CM-43LP	BLACK POLYMER (ABS)SURFACE BOX, SHALLOW DEPTH, FLAME/IMPACT RESISTANT, 5" X 5" X 1-3/8".
	CM-48AL	ANODIZED ALUMINUM SURFACE BOX, SHALLOW DEPTH
	CM-44	SURFACE BOX, SHALLOW DEPTH, OFFSET MOUNT (ON JAMB). STAINLESS STEEL 4-1/2" W X 4-1/2"H X 5/8" D.
	CM-540B	SURFACE BOX, SHALLOW DEPTH. FLAME AND IMPACT RESISTANT BLACK POLYMER (ABS) 4-13/16" X 4-13/16" X 5/8"
	CM-67	SLEEVE COVER FOR STANDARD DOUBLE GANG SURFACE BOX. HEAVY GAUGE STAINLESS STEEL
	CM-49C	ADAPTER PLATE FOR MOUNTING ON DOUBLE GANG OR 4" SQUARE BOX 4" X 1/16"
	CM-55CBL	BLACK POLYMER, ABS FLUSH BOX WITH STANDARD DEPTH, FLAME/IMPACT 6-1/2"W X 6-1/2"H X 2"