IPCHSKIT
Product Installation Document

PN 53294:A1 09/21/2009 09-628

The IPCHSKIT comes with all hardware necessary to mount the IP Communicator onto a chassis.

- mounting plate
- two (2) female, #4-40 x 0.75” standoffs, P/N 42042
- four (4) #4-40 x 0.25” screws, P/N 38134
- four (4) 1-1/8” Snap-in support posts, P/N 42215
- plastic wiring label/cover, P/N 53255

Recommended mounting for the IPDACT is in a CHS-4 Series chassis positioned with the required UDACT oriented as shown below. The IPDACT must *always* be placed in the 4th position and in the front location for access to wiring. After attaching the plastic cover to the IPDACT with the snap-in support posts, secure the mounting plate to the back of the IPDACT. Then, insert the tab at the bottom of the plate into the slot on the chassis and attach as shown.

CHS-4/N

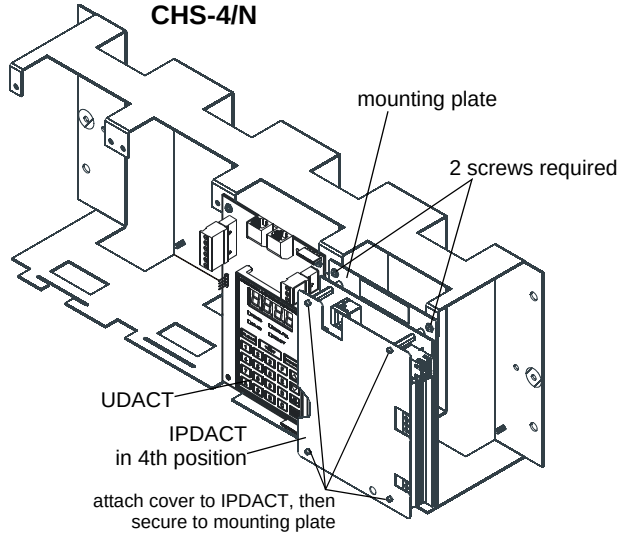

CHS-4L

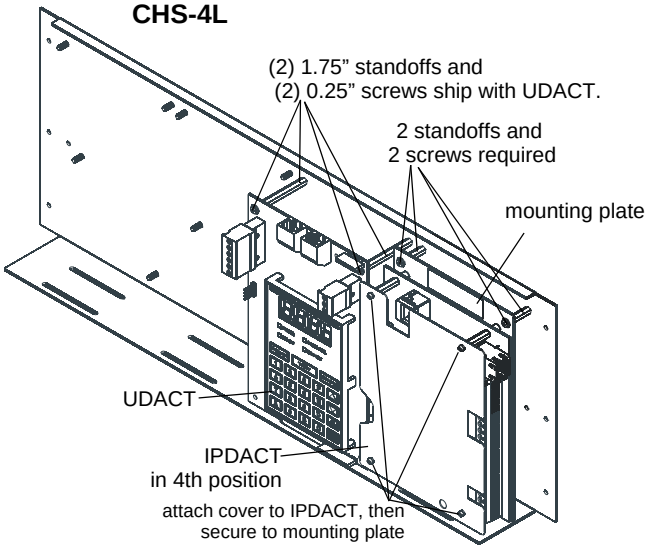

NFS2-640 Chassis

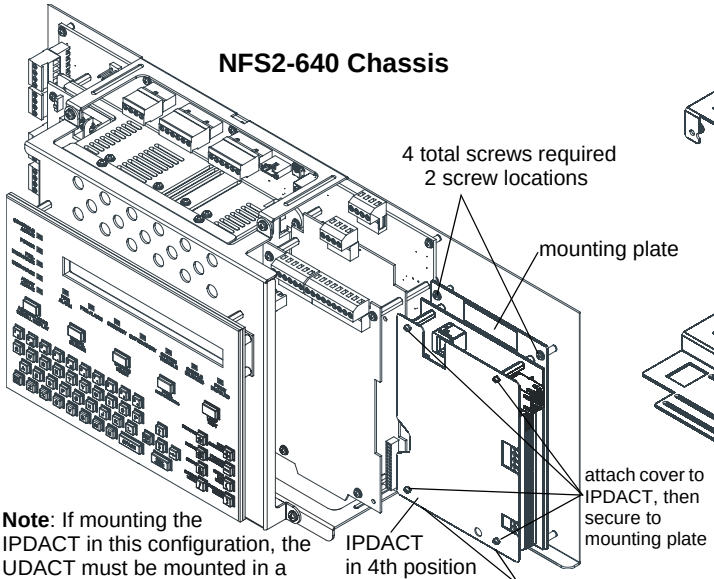

Note: If mounting the IPDACT in this configuration, the UDACT must be mounted in a separate chassis directly below this one and in the 4th position. For applications where the UDACT is installed in the 4th position of the NFS2-640 chassis, install the IPDACT in the 4th position of a separate chassis.

CHS-M3
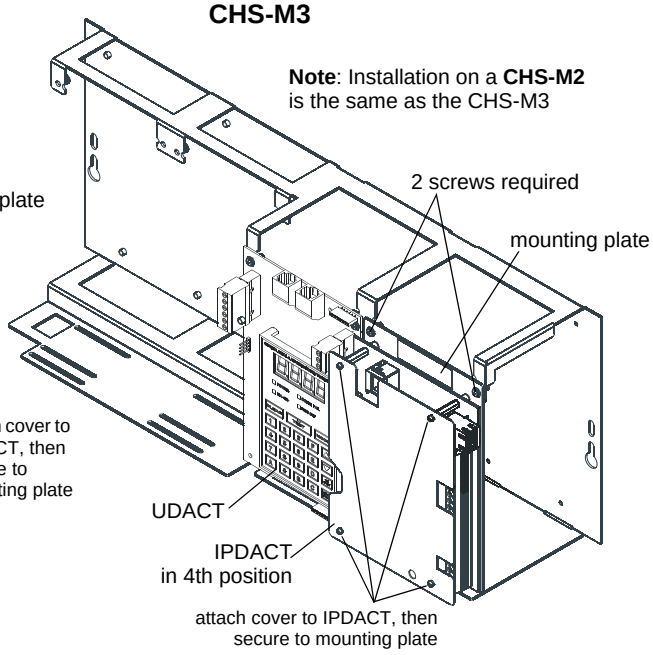
Note: Installation on a **CHS-M2** is the same as the CHS-M3