Honeywell
GENT

Gent ICAM IAS

ICAM Air-sampling Smoke Detection System with Gent S-Quad provides flexible and cost effective fire detection solutions into areas where a single detection sampling point is required in place of traditional spot detection. Typical applications are lift shafts, tamperproof and special accommodation environments.

How it works

The IAS systems actively draw air from the protected area through a single sampling hole in a pipe network. Sampled air is then filtered before being analysed by the S-Quad sensor incorporated in the system. The IAS system is available with one inlet pipe (IAS-1) or two inlet pipes (IAS-2), and can be fitted with one or two S-Quad sensors per system. With the use of S-Quad sensors and the ICAM units ASD sampling in inaccessible areas can easily be incorporated onto the Vigilon loop. Additionally using the input facility built into S-Quad sensors the status of the ICAM aspirator may be integrated and displayed on the Vigilon panel without the need for extra interfaces.

The systems utilise a high performance aspirator and software configurable flow monitoring circuitry. Air flow level is displayed on a ten element bar graph that can be adjusted for high and low flow thresholds, and flow failure is reported as a device fault via relays.

Detection Strategies

The systems may be configured for a number of detection strategies including:

- single or dual addressable area detection
- redundant detection
- coincidence detection according to EN54-2 section 7.12.3

Description

ICAM Air-sampling Smoke Detection System with Gent S-Quad provides flexible and cost effective fire detection solutions into areas where a single detection sampling point is required in place of traditional spot detection.

Listings/Approvals

- EN54-20 (VdS) (Sensitivity Class C with S-Quad S4-710 and S4-901 sensors)

KEY FEATURES

- Single or dual channel fire detection
- Configuration as part of the Vigilon C&E
- Multiple detection strategies
- Up to 50m of sampling pipe and one sampling hole
- Microprocessor controlled
- Highest fan capacity in its class
- Field serviceable air filter
- Adjustable aspirator speed with airflow monitoring
- IP65 enclosure

ICAM IAS Technical Specifications

Detector Configuration Options

Several configuration options are available for the IAS-1 and IAS-2 systems:

- IAS-1 system – one or two S-Quad sensors
- IAS-2 system – two S-Quad sensors

IAS-1 systems fitted with one S-Quad sensor are capable of providing single area detection, but IAS-1 and IAS-2 systems fitted with two S-Quad sensors are able to provide a number of detection strategies. The table below describes the recommended configuration options to fit the selected detection strategy when S-Quad sensors are fitted into an IAS system.

Please note a baffle is required for each detector fitted into an ICAM unit. Baffles are sold separately in packs of 10 under order code 06-GT10.

TWO SENSOR STRATEGY		
	IAS-1	IAS-2
DUAL ADDRESSABLE AREAS		✓
REDUNDANCY	✓ (or)	✓ (or)
COINCIDENCE DETECTION **	✓ (and)	✓ (and)

**Uses Vigilon cause and effect (EN54-2 7.12.3)
Note: (OR / AND) represents the suggested boolean logic for combining two sensors to achieve detection strategy

ORDER CODES	
1 PIPE NO DETECTOR POINT IN BOX	IAS-1
2 PIPE NO DETECTORS POINT IN BOX	IAS-2
BAFFLE FOR GENT DETECTOR S-QUAD (10 PACK)	06-GT10
S-QUAD OPTICAL HEAT SENSOR	S4-710
S-QUAD DUAL OPTICAL HEAT AND CO SENSOR	S4-901
S-QUAD BASE	S4-700
SPARE KEY	20-LA0015-03
REPLACEMENT FILTER, PACK OF 10 (COARSE 20 PPI)-BLACK	02-FL53

ICAM is listed for use with S-Quad sensors using defined sensitivity states:
S4-710 State 3
S4-901 State 1

SPECIFICATION	
SUPPORTED S-QUAD SENSORS	S4-710 Optical Heat S4-901 Dual Optical Heat & CO
SUPPLY VOLTAGE	IAS-1 and IAS-2: 18-30V DC S-Quad Sensors (supplied from Vigilon Loop)
CURRENT	300 mA (max)
DIMENSIONS (WXHXD)	259mm x 184mm x 166mm
OPERATING TEMPERATURE	-10°C to +60°C
OPERATING HUMIDITY	10 to 95% RH (non-condensing)
INLET PIPE SIZE	Outer Diameter: 25mm, Inner Diameter: 21mm
SAMPLING NETWORK	Max supported pipe length 50m 1 sampling point allowed for each S-Quad Sensor
IP RATING	IP65 with exhaust fitted (IP53 without)
FILTRATION	Serviceable filter, External filter optional
FLOW MONITORING AND REPORTING	High and Low adjustable
FAN	Control: 10 programmable speeds, Pressure: 250 Pa

Dimensions (mm)

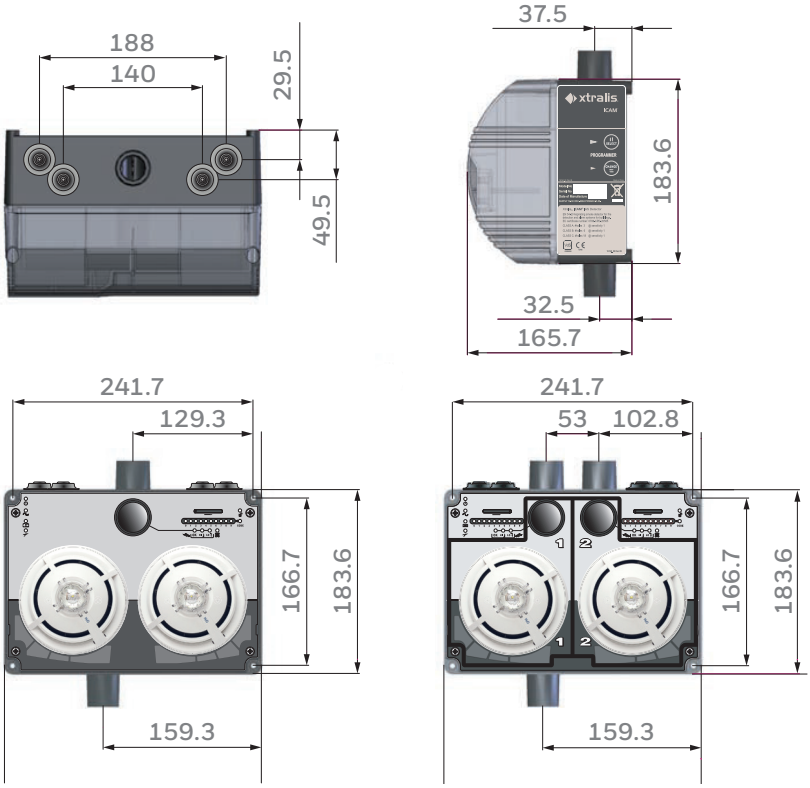

For more information

www.gent.co.uk

Honeywell Gent
140 Waterside Road
Hamilton Industrial Park,
Leicester, LE5 1TN
Telephone: 0116 246 2042
E-mail: gentenquiry@honeywell.com

Content subject to change without notice.

GEN149 | 10/2017
© 2017 Honeywell International Inc.

Honeywell GENT