AVR-NN808P8

NDAA COMPLIANT | CE | FC

8 CH. 4K NETWORK VIDEO RECORDER
8MP / 6MP / 5MP / 4MP / 3MP / 1080P / 960P / 720P /
8 PORT PoE NVR

OVERVIEW

- Plug & Play (8MP/ 6MP / 5MP / 4MP / 3MP / 1080P / 1280×1024 / 960P / 720P / 960H / DI/ CIF) IP Network Cameras
- H.265 High Profile Compression for High Megapixel on Low Bit Rate
- Multi-Mode Recording: Manual / Timer / Motion / Sensor/ POS / AI Recording
- Playback : 8CH Simultaneous Playback
- Search : Time Slice, Time, Event, Tag, Smart Search
- Support Multiple VCA (Video Content Analytics) Events, Such as Object
- Abandoned/Missing, Region Intrusion, Tripwire, Video Exception, etc.
- Support POS Information Overlay on Live View and Playback
- Express and Flexible Backup via USB, Network and so on
- Pentaplex : Preview, Record, Playback, Backup and Remote Access
- DHCP, DDNS, PPPoE Network Protocol
- Remote Control via Web Client or CMS : Preview, Playback, Backup, PTZ and Configuration
- 8 PoE Network Ports, Support IPC Direct Connection to NVR; Support PoE Power Supply
- Dual Stream Technology for Local Storage with High Definition, Remote Network Transmission and Remote Surveillance with Mobile Device
- Support Multi-User Online Simultaneously
- Authorization Management, Log View and Device Status View
- 1080P Output, True High Resolution Display
- Support NAT function and QRCode scanning with mobile phones
- Professional HD Mobile Surveillance App for iOS and Android
- NDAA Compliant

DIMENSIONS

Unit : inch(mm)

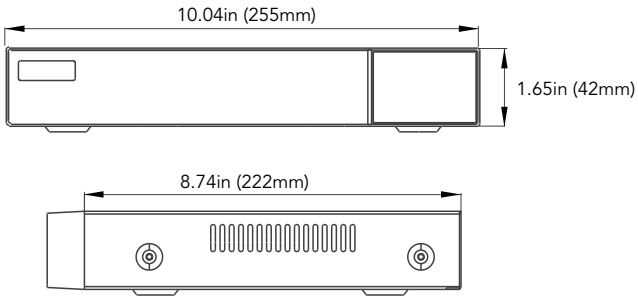

MOBILE APP

AVYCON MOBILE CVMS

Available on the App Store | ANDROID APP ON Google play

REAR PANEL

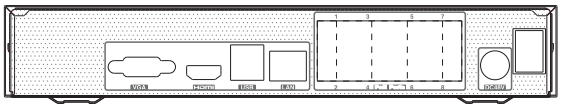

Copyright © 2024 AVYCON. All rights reserved.

AVYCON www.avycon.com

All the contents on the AVYCON's digital and printed marketing materials include product names, part number, unique identification letters, etc., are trademarks of AVYCON. Any unauthorized use or distribution of trademarked contents is strictly prohibited by law. In addition, graphical designs, images, features, and specifications on such materials may differ from the actual products and subject to change without notice. For the latest product information/specification please visit our website or contact one of our product specialists at marketing@avycon.com

SPECIFICATIONS

VIDEO	
IP Video Input	8 Channels IPC
Output	HDMI1: 1920 x 1080 / 1280 x 1024 / 1024 × 768 VGA x 1: 1920 x 1080 / 1280 x 1024 / 1024 × 768
IP Video Input Resolution	8MP/ 6MP/ 5MP/ 4MP/ 3MP/ 1080P/ 1280×1024/ 960P/ 720P/ 960H/ D1/ CIF @ 30/25/20fps
Incoming Bandwidth (Mbps)	40Mbps
Outgoing Bandwidth (Mbps)	40Mbps
Video Compression	Standard H.265
AUDIO	
Network Input	8 Channel IPC Audio Input
Local Output	No
2-Way Audio	No
HDMI Audio Output	Yes
Compression	G.711(U/A)
RECORDING	
Resolution	8MP/ 6MP/ 5MP/ 4MP/ 3MP/ 1080P/ 1280×1024/ 960P/ 720P/ 960H/ D1/ CIF
Record Stream	Dual Stream Recording
Mode	Manual, Timer, Motion, Sensor
PLAYBACK	
Smart Search	Highlighted Color to Display the Camera Record in a Certain Period of Time Different Colors Refers to Different Record Events
Search	Time slice / Time / Event / Tag Search / Smart Search
Function	Play, Pause, Fast Forward, Fast Rewind, Digital Zoom, etc.
Simultaneous Playback	Max 8 Channels
ALARM	
Alarm Input	IPC Alarm Input Supported
Alarm Output	IPC Alarm Output Supported
Mode	Manual, Sensor, Motion, Exception, Smart Events
Alarm Trigger	Record, Snap, Preset, E-mail, etc.
STORAGE	
HDD Interface	SATA x 1, Max 10TB per HDD
BACKUP	
Network Backup	Yes
Local Backup	USB Flash Drive, USB Mobile HDD
NETWORK	
Interface	RJ45 10 / 100 / 1,000 Mbps x 1
PoE Port	100M RJ45 x 8
Standard	IEEE802.3AF
Protocol	TCP / IP, DHCP, DNS, DDNS, UPnP, NTP, SMTP, HTTP, HTTPs, 802.1x, RTSP, SNMP, ONVIF, etc. PPPoE
Web Client	Max. 10 Online Users
EXTERNAL INTERFACE	
Remote Controller	Optional
USB	USB 2.0 x 2 (Rear Panel)
VIDEO ANALYTICS	
License Plate Recognition	Supported on v1.4.4 (used with the AVC-NBL21M-L1)
GENERAL	
Power Supply	DC 48V/2.5A
Power Consumption	≤6W (Without HDD)
Working Environment	14°~122°F (-10°~50° Celcius)
Working Humidity	10% ~ 90% (Non-Condensing)
Dimensions	10.04” x 8.74” x 1.65” (255mm x 222mm x 42mm)

HDD OPTIONS

- 1TB HDD: AVR-NN808P8-1T
- 2TB HDD: AVR-NN808P8-2T
- 3TB HDD: AVR-NN808P8-3T
- 4TB HDD: AVR-NN808P8-4T
- 6TB HDD: AVR-NN808P8-6T
- 8TB HDD: AVR-NN808P8-8T
- 12TB HDD: AVR-NN808P8-12T
- 18TB HDD: AVR-NN808P8-18T

Copyright © 2024 AVYCON. All rights reserved.

All the contents on the AVYCON’s digital and printed marketing materials include product names, part number, unique identification letters, etc., are trademarks of AVYCON. Any unauthorized use or distribution of trademarked contents is strictly prohibited by law. In addition, graphical designs, images, features, and specifications on such materials may differ from the actual products and subject to change without notice. For the latest product information/specification please visit our website or contact one of our product specialists at marketing@avycon.com