RadioRA 2 RF Maestro Local Controls

RadioRA 2 Maestro local controls function much like standard dimmers and switches, but can be controlled as part of a lighting control system. Local lighting controls are useful in locations where single circuits of lighting need to be dimmed or switched. Local fan speed controls are useful in locations where control of a single ceiling paddle fan is needed.

RadioRA 2 Maestro dimmers incorporate advanced features such as fade-on/fade-off, delayed long fade-to-off, and rapid full-on.

RadioRA 2 Maestro local controls include a Front Accessible Service Switch (FASS) for safe lamp replacement. RadioRA 2 Maestro local controls install in single pole or multi-location applications. Remote dimmers/switches are available for multi-location control.

Use Lutron Designer (Claro or Satin Colors) wallplates or designer-style wallplates from other manufacturers. Wallplates are sold separately. Lutron Claro and Satin Colors wallplates snap on with no visible means of attachment. RadioRA 2 Maestro local controls support color change kits.

Dimmer

Switch

Fan Speed

Remote Dimmer

Remote Switch

RadioRA 2 RF Maestro Local Controls

Model Numbers

Dimmers

Incandescent / Halogen / MLV (120 V~)

RRD-6CL-XX	600 W / 600 VA (Incandescent / Halogen / MLV) or 150 W (CFL / LED) Two-Wire Dimmer*
RRD-6ND-XX	600 W / 600 VA Neutral Wire Dimmer
RRD-10D-XX	1000 W / 1000 VA Dimmer
RRD-10ND-XX	1000 W / 1000 VA Neutral Wire Dimmer

Incandescent / Halogen / MLV / ELV (120 V~)

RRD-6NA-XX	600 W / 600 VA Neutral Wire Adaptive Dimmer

3-Wire Fluorescent / LED (120–277 V~)

RRD-F6AN-DV-XX	6 A Neutral Wire Dimmer

LED / CFL / Incandescent / Halogen / MLV / ELV / Mark 10 Ballasts / Hi-Lume LTE Drivers

RRD-PRO-XX	250 W (CFL / LED) or 500 W / VA Incandescent / Halogen / ELV or 400 VA MLV Phase Selectable, Neutral Optional dimmer*

Switches

Lighting and Motor Loads (120 V~)

RRD-8ANS-XX	8 A Light, 1/4 HP 5.8 A Motor Neutral Wire Electronic Switch

Lighting and Motor Loads (120–277 V~)

RRD-8S-DV-XX	8 A Light, 1/10 HP 3 A Motor Two-Wire Electronic Switch

Fan Speed Control

Single ceiling paddle fan only (120 V~)

RRD-2ANF-XX	2 A Fan Speed Control

* Go to www.lutron.com/ledfinder to see all compatible CFL / LED lamps.

Note: "XX" in the model number represents color / finish code. See ***Colors and Finishes*** at end of document.

RadioRA 2 RF Maestro Local Controls

Model Numbers

Dimmers

Remotes (for multi-location installations)

RD-RD-XX	Remote Dimmer (120 V~)
RD-RS-XX	Remote Switch (120 V~)
RD-RD-277-XX	Remote Dimmer (277 V~) (for use with -F6AN-DV only)
RD-RS-277-XX	Remote Switch (277 V~) (for use with -8S-DV only)

Color Change Kits

RK-D-XX	Dimmer (-6CL, -6ND, -10D, -10ND, -6NA, -PRO, -F6AN-DV)
RK-S-XX	Switch (-8ANS, -8S-DV)
RK-AD-XX	Remote Dimmer (-RD)
RK-AS-XX	Remote Switch (-RS)
RK-F-XX	Fan Speed Control (-2ANF)

Color Change Kit Bulk Packs (Quantity 10)

RK-D-10-XX	Dimmer (-6CL, -6ND, -10D, -10ND, -6NA, -PRO, -F6AN-DV)
RK-S-10-XX	Switch (-8ANS, -8S-DV)
RK-AD-10-XX	Remote Dimmer (-RD)
RK-AS-10-XX	Remote Switch (-RS)
RK-F-10-XX	Fan Speed Control (-2ANF)

Note: "XX" in the model number represents color/finish code. See ***Colors and Finishes*** at end of document.

RadioRA 2 RF Maestro Local Controls

Specifications

Model Numbers	***Dimmer:*** RRD-6CL, RRD-6ND, RRD-10D, RRD-10ND, RRD-6NA, RRD-F6AN-DV, RRD-PRO ***Switch:*** RRD-8ANS, RRD-8S-DV ***Fan Speed Control:*** RRD-2ANF ***Remote:*** RD-RD, RD-RS, RD-RD-277, RD-RS-277
Power	***120 V~ 50/60 Hz:*** -6CL, -6ND, -10D, -10ND, -6NA, -2ANF, -8ANS, -RD, -RS, -PRO ***120–277 V~ 50/60 Hz:*** -F6AN-DV, -8S-DV ***277 V~ 50/60 Hz:*** -RD-277, -RS-277
Typical Power Consumption	***Dimmer/Switch/Fan Speed Control:*** 0.6 W Test conditions: load is off and nightlight mode is enabled. ***Remote Dimmer/Switch:*** 0 W Test conditions: load is off.
Regulatory Approvals	UL, CSA (all except -6CL, -6NA and -PRO), cUL (-6CL, -6NA and -PRO only), NOM, FCC, IC, COFETEL, ANATEL (all except -6NA, -6CL and Remotes)
Environment	Ambient operating temperature: 32 °F to 104 °F (0 °C to 40 °C), 0% to 90% humidity, non-condensing. Indoor use only.
Communications	Dimmers and switches communicate with the system through Radio Frequency (RF) and must be located within 30 ft (9 m) of a repeater. Remote dimmers/switches are not required to be within a specific range of a repeater. System devices operate on frequencies between 431.0 MHz and 437.0 MHz.
ESD Protection	Tested to withstand electrostatic discharge without damage or memory loss, in accordance with IEC 61000-4-2.
Surge Protection	Tested to withstand surge voltages without damage or loss of operation, in accordance with IEEE C62.41-1991 Recommended Practice on Surge Voltages in Low-Voltage AC Power Circuits.
RTISS Equipped	Circuitry compensates in real time for incoming line-voltage variations (neutral connection required). -PRO only.
Power Failure	Power failure memory: should power be interrupted, the control will return to its previous state when power is restored.
Mounting	Requires a U.S. wallbox. 3½ in (89 mm) deep recommended, 2¼ in (57 mm) deep minimum.
Wiring	Use only remote dimmers (-RD/-RD-277) and remote switches (-RS/-RS-277) with dimmers/switches/fan speed controls. Up to 9 -RD/-RD-277 or -RS/-RS-277 may be used with controls.
Limited Warranty	www.lutron.com/warranty or call 1.844.LUTRON1 for a printed copy.

RadioRA 2 RF Maestro Local Controls

Design Features

Dimmer

- On a single-tap, lights fade ON or OFF.
- On a double-tap, lights go to full ON.
- When ON, press and hold the tapswitch to engage the delayed long fade to OFF.
- Light levels can be fine-tuned by pressing and holding the dimming rocker until the desired light level is reached.
- Neutral and two-wire dimmers available.

Switch

- On a single-tap, lights or motors turn ON or OFF.
- Neutral and two-wire switches available.

Fan Speed Control

- On a single-tap, fan turns ON or OFF.
- Fan speeds can be selected by pressing and holding the fan speed control rocker until the desired fan speed is reached.
- Controls one paddle-type ceiling fan (Permanent split-capacitor motor) up to 2 A. Not for use with shaded-pole type motors (e.g., bath exhaust fans).
- Provides 4 quiet speeds plus OFF.
- Not for use with fans that have integrated fan speed and/or light control modules.
- Requires a neutral connection.

RadioRA 2 RF Maestro Local Controls

Dimensions

All dimensions are shown as: in (mm)

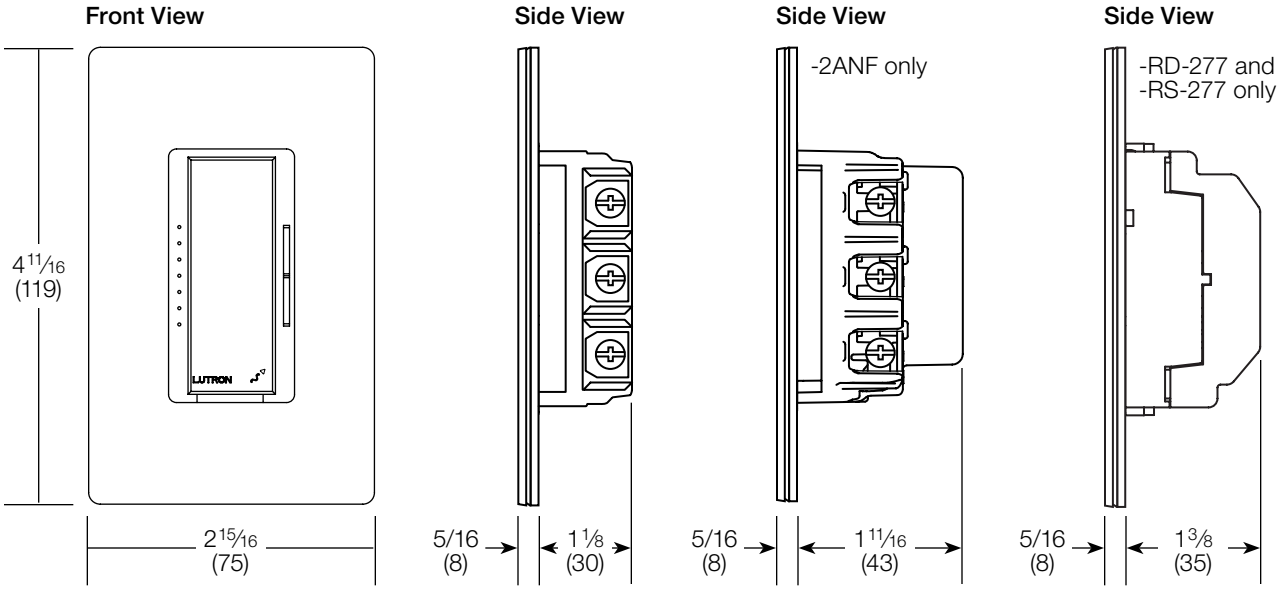

Mounting and Parts Identification

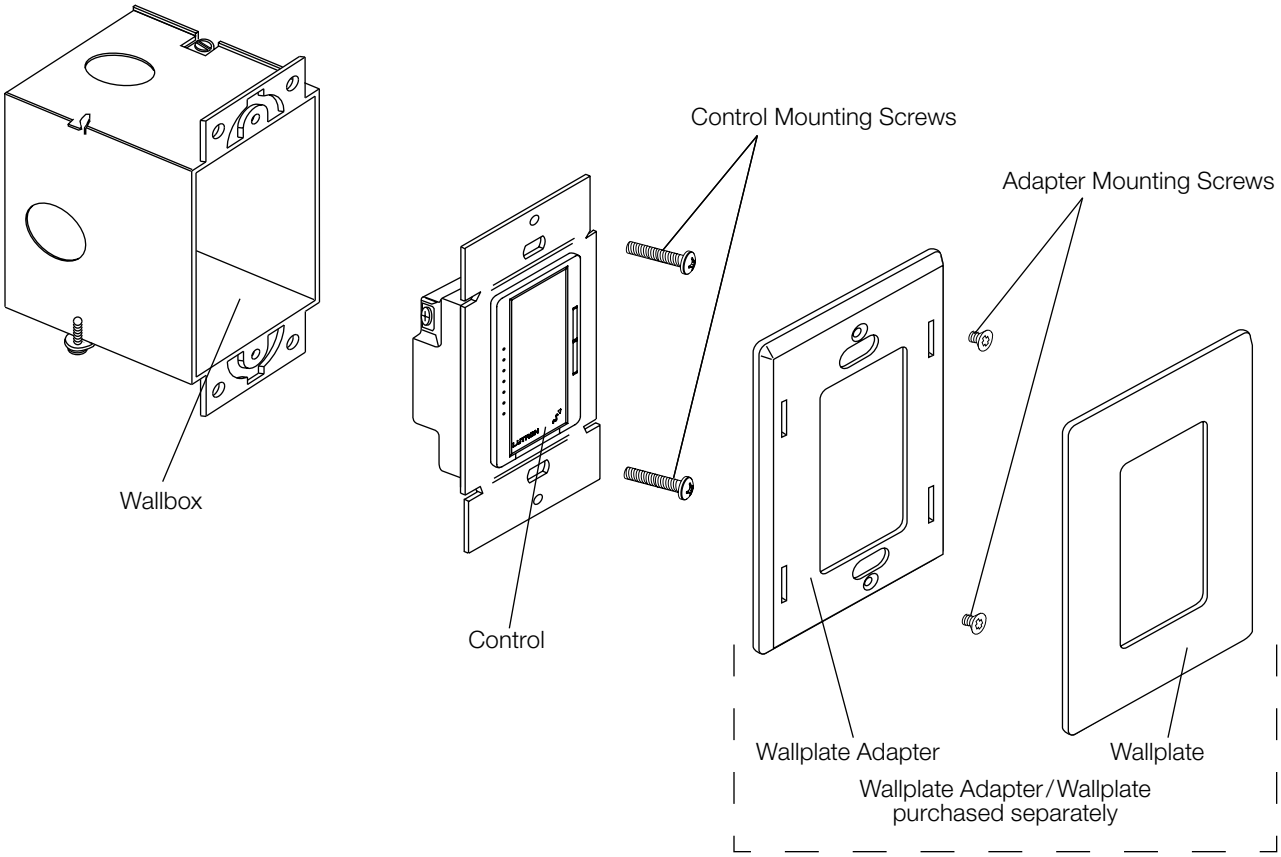

RadioRA 2 RF Maestro Local Controls

Ganging and Derating

When combining controls in the same wallbox, derating is required (see ***Load Type and Capacity***). No derating is required for remote dimmers, remote switches, or fan speed controls.

Load Type and Capacity

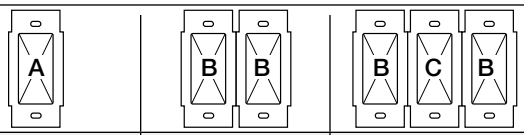

Load Type	Minimum Load	A Not Ganged	B End of Gang	C Middle of Gang	Neutral Connection
RRD-6CL[1]					
Incandescent/Halogen/CFL/LED	see *Mixing Lamp Types,* page 10				No
MLV[2,3]	50 W/VA	450 W/600 VA	400 W/500 VA	300 W/400 VA	
RRD-6ND[1,4]					
LED	Varies[5]	150 W	150 W	150 W	Yes
Incandescent/Halogen	10 W	600 W	500 W	400 W	
MLV[2,3]	10 W/VA	450 W/600 VA	400 W/500 VA	300 W/400 VA	
RRD-10D[1]					
Incandescent/Halogen	50 W	1000 W	800 W	650 W	No
MLV[2]	50 W/VA	800 W/1000 VA	600 W/800 VA	500 W/650 VA	
RRD-10ND[1,4,6]					
LED	Varies[5]	150 W	150 W	150 W	Yes
Incandescent/Halogen	10 W	1000 W	800 W	650 W	
MLV[2,3]	10 W/VA	800 W/1000 VA	600 W/800 VA	500 W/650 VA	
RRD-6NA[1,4]					
LED	Varies[5]	150 W	150 W	150 W	Yes
Incandescent/Halogen/ELV[2]	5 W	600 W	500 W	400 W	
MLV[2,3]	5 W/VA	450 W/600 VA	400 W/500 VA	300 W/400 VA	

1 Dimmer Load Type:
- -6CL: designed for use with permanently-installed incandescent, MLV, tungsten halogen, CFL, or LED only.
- -6ND, -10D, -10ND: designed for use with permanently-installed incandescent, LED, MLV, or tungsten halogen only.
- -6NA: designed for use with permanently-installed incandescent, LED, ELV, MLV, or tungsten halogen only.

Note: Do not install dimmers to control receptacles or motor-operated appliances.

2 Low-Voltage Applications:
- -6CL, -6ND, -10D, -10ND: use with magnetic (core and coil) low-voltage transformers only. Not for use with electronic (solid-state) low-voltage transformers.
- -6NA: use with electronic (solid-state) or magnetic (core and coil) transformers; do not mix ELV and MLV load types on a single control.

Operation of a low-voltage circuit with lamps inoperative or removed may result in transformer overheating and premature failure. Lutron strongly recommends the following:
- Do not operate low-voltage circuits without operative lamps in place.
- Replace burned-out lamps as soon as possible.
- Use transformers that incorporate thermal protection or fused transformer primary windings to prevent transformer failure due to overcurrent.

3 Do not mix CFL or LED loads with MLV loads.

4 Power Boosters/Load Interfaces: -6ND, -10ND, -6NA can be used to control power boosters/load interfaces. For a list of compatible power boosters/load interfaces see ***Compatible Power Boosters and Load Interfaces***, page 11.

5 Minimum load depends on lamp and is not limited to a particular wattage. Refer to the LED Product Selection Tool at www.lutron.com/ledtool.

6 Operating Temperature: -10ND has an extended operating temperature of -4 °F to 104 °F (-20 °C to 40 °C). Additionally, it has an operating temperature of -4 °F to 140 °F (-20 °C to 60 °C) when the load capacity is no greater than 600 W and an operating temperature of -4 °F to 158 °F (-20 °C to 70 °C) when the load capacity is no greater than 300 W.

Continued on next page...

RadioRA 2 RF Maestro Local Controls

Load Type and Capacity (continued)

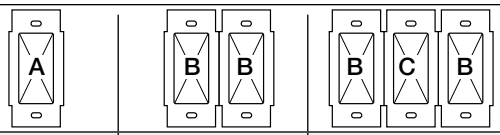

Load Type	Minimum Load	A Not Ganged	B End of Gang	C Middle of Gang	Neutral Connection	Required Phase Mode
RRD-PRO						
LED	1 bulb[2]	250 W	200 W	150 W	Optional[1]	Either
CFL	1 bulb[2]	250 W	200 W	150 W	Optional[1]	Forward
MLV Transformer with LEDs	See Application Note #559 (P/N 048559) at www.lutron.com No Derating Required				Required	Forward
ELV Transformer with LEDs						Reverse
MLV Transformer with Halogen	10 W	400 VA (300 W)	No Derating Required		Required	Forward
ELV Transformer with Halogen	10 W	500 W	400 W	300 W	Required	Reverse
Incandescent/Halogen	5 W[2]	500 W	400 W	300 W	Optional[1]	Either
Dimmable Fluorescent Ballast	1 ballast	3.3 A (400 VA)	No Derating Required		Required	Forward
Hi-lume 1% 2-wire (LTE) LED Driver	1 driver	3.3 A (400 W) 20 drivers max.	No Derating Required		Required	Forward
PHPM-PA/3F and GRX-TVI[3]	1 interface	3 interfaces	No Derating Required		Required	Forward

Notes for dimming MLV fixtures:

- The total VA rating of the transformer(s) shall not exceed the VA rating of the dimmer. The VA rating of the transformer should be written on the nameplate label or determined by contacting the manufacturer. The maximum halogen lamp wattage is typically 70%-85% of the transformer's VA rating.
- MLV transformer loads powered by utility power and emergency backup generators should have a minimum 1 second delay between switching power sources. Rapid non-synchronous switching can cause the transformers to draw high currents which would cause breakers to trip or the dimmers controlling them to trip a protection.

[1] **Neutral is recommended for best dimming performance, if available, but is not required for this load type.**

[2] Minimum load shown is for neutral connected operation. If no neutral is used, minimum load is 2 bulbs LED/CFL, or 25 W Incandescent/Halogen.

[3] Power Boosters/Load Interfaces: -RRD-PRO can be used to control power boosters/load interfaces. For a list of compatible power boosters/load interfaces see ***Compatible Power Boosters and Load Interfaces***, page 11.

RadioRA 2 RF Maestro Local Controls

Load Type and Capacity (continued)

-8ANS, -8S-DV, -RD-277, and -RS-277 have fins that need to be removed for multigang installations.

Do not remove outside fins on ends of ganged controls (shaded areas).

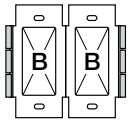

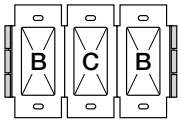

Load Type	Minimum Load	A Not Ganged	B End of Gang	C Middle of Gang	Neutral Connection
RRD-F6AN-DV[1,2,3]					
Fluorescent / LED Drivers	0.05 A	6 A	5 A	3.5 A	Yes
	1 ballast	60 ballasts	50 ballasts	35 ballasts	
RRD-2ANF[4]					
Ceiling Fan	0.083 A	2 A	2 A	2 A	Yes
RRD-8ANS[1,5]					
Lighting	10 W	8 A	6.5 A	5 A	Yes
Motor	0.08 A	1/4 HP 5.8 A	1/4 HP 5.8 A	1/6 HP 4.4 A	
RRD-8S-DV[5,6]					
Lighting	40 W/VA	8 A	8 A (2-gang); 7 A (3-gang)	7 A	No
Motor	0.4 A	1/10 HP 3 A			

Note: Do not install dimmers to control receptacles or motor-operated appliances.

1 Power Boosters / Load Interfaces: -F6AN-DV, -8ANS can be used to control power boosters / load interfaces. For a list of compatible power boosters / load interfaces see ***Compatible Power Boosters and Load Interfaces***, page 11.

2 Fluorescent Dimmer Load Type: -F6AN-DV: designed for use with permanently installed 3-wire 120 V∼ or 277 V∼ line voltage control fluorescent ballasts or LED drivers. Use with only Hi-lume, Hi-lume 3D, Hi-lume Compact SE, Eco-10, or EcoSystem (H3D-, FDB-, ECO-, HL3-, EC5-, L3D). Do NOT use with any other ballasts or drivers. Do not install to control receptacles or motor-operated appliances.

3 Maximum Load: The maximum load for the -F6AN-DV is either the derated load or the number of ballasts, whichever is LESS.

4 Ceiling Fan Application: -2ANF
- Use to control one paddle-type ceiling fan (permanent split-capacitor).
- Use the ceiling fan's pull chain to set its speed to the highest setting.
- Do not use to control fans that use shaded-pole motors (e.g., bath exhaust fans).
- Do not use to control fans that have integrated fan speed controls (e.g., fans that have a remote control) unless the integrated control is removed from the ceiling fan.
- Do not connect to any other motor-operated appliance or to any lighting load type.
- Do not use to control a fan lighting load (e.g., light kit).

5 Switch Load Type:
- -8ANS, -8S-DV: designed for use with permanently installed 120 V∼ incandescent, MLV, ELV, tungsten halogen, fluorescent, CFL, LED, or motor loads.
- -8S-DV can also be used with permanently installed 277 V∼ MLV or fluorescent loads.

6 Shunt Capacitor: Some -8S-DV installations may require the use of a shunt capacitor; this is especially necessary for load types sensitive to leakage current (e.g., fluorescent ballasts). If load flickers, install a shunt capacitor. Optional shunt capacitor must be installed inside the load fixture or in a separate J-box. For shunt capacitor installation see Wiring Diagram 4, 9, or 10. If controlling Type B TLED bulbs, consult Application Note #812 (P/N 048812) on www.lutron.com.

Continued on next page...

RadioRA 2 RF Maestro Local Controls

Mixing Lamp Types

Mixing lamp types (using a combination of CFL/LED, Incandescent/Halogen bulbs) and ganging with other dimmers or electronic switches may reduce maximum wattage as shown in the chart below.

Example: If you have two dimmers ganged together and you have two 24 W bulbs installed (total CFL Wattage = 48 W), on one dimmer, you may add up to 300 W of incandescent or halogen lighting to that one dimmer. Repeat the exercise for the other dimmer with which it is ganged.

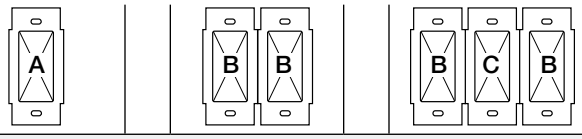

Total CFL/LED Wattage		Total Incandescent/Halogen Wattage: A Not Ganged		B End of Gang		C Middle of Gang	Neutral Connection
RRD-6CL[1,2]							
0 W	+	50 W–600 W	Or	50 W–500 W	Or	50 W–400 W	No
1 W–25 W	+	0 W–500 W	Or	0 W–400 W	Or	0 W–300 W	
26 W–50 W	+	0 W–400 W	Or	0 W–300 W	Or	0 W–200 W	
51 W–75 W	+	0 W–300 W	Or	0 W–200 W	Or	0 W–100 W	
76 W–100 W	+	0 W–200 W	Or	0 W–100 W	Or	0 W–50 W	
101 W–125 W	+	0 W–100 W	Or	0 W–50 W	Or	0 W	
126 W–150 W	+	0 W	Or	0 W	Or	0 W	
RRD-PRO							
0 W	+	5 W[3]–500 W	Or	5 W[3]–400 W	Or	5 W[3]–300 W	Optional
1 W–50 W	+	0 W–400 W	Or	0 W–300 W	Or	0 W–200 W	
51 W–100 W	+	0 W–300 W	Or	0 W–200 W	Or	0 W–100 W	
101 W–150 W	+	0 W–200 W	Or	0 W–100 W	Or	0 W	
151 W–200 W	+	0 W–100 W	Or	0 W	Or	0 W	
201 W–250 W	+	0 W	Or	0 W	Or	0 W	

1 Dimmer Load Type -6CL is designed for use with permanently-installed incandescent, CFL, LED, MLV, or tungsten halogen only. Do not install dimmers to control receptacles or motor-operated appliances.
2 Do not mix CFL and LED loads with MLV loads.
3 Minimum load shown is for neutral connected operation. If no neutral is used, minimum load is 2 bulbs CFL/LED, or 25 W Incandescent/Halogen.

RadioRA 2 RF Maestro Local Controls

Compatible Power Boosters and Load Interfaces

Some local controls can be used to control power boosters or load interfaces. Up to three power boosters or load interfaces can be used with one control. See table below for a list of controls and compatible power boosters and load interfaces.

Control	Phase Adaptive Power Modules: PHPM-PA-120-WH; PHPM-PA-DV-WH	3-wire Fluorescent Power Modules: PHPM-3F-120-WH; PHPM-3F-DV-WH	Switched Power Module: PHPM-SW-DV-WH	0–10 V⎓ Interface and Switching Module: GRX-TVI
RRD-6ND	✓	✓		✓
RRD-10ND	✓	✓		✓
RRD-6NA	✓	✓		✓
RRD-F6AN-DV[1]	✓	✓		✓
RRD-8ANS			✓	
RRD-PRO	✓	✓		✓

[1] Only the GRX-TVI is compatible with the RRD-F6AN-DV at 277 V∼. All other power modules are 120 V∼ only.

RadioRA 2 RF Maestro Local Controls

Operation

Dimmer

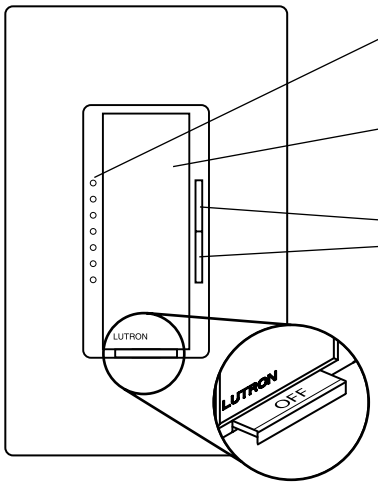

Status LEDs
(not on Remote Dimmers)
Indicate light level; glow softly as night light when light is off

Tapswitch
Tap on/off

Dimming Rocker
Press to brighten
Press to dim

FASS
Front Accessible Service Switch

Switch

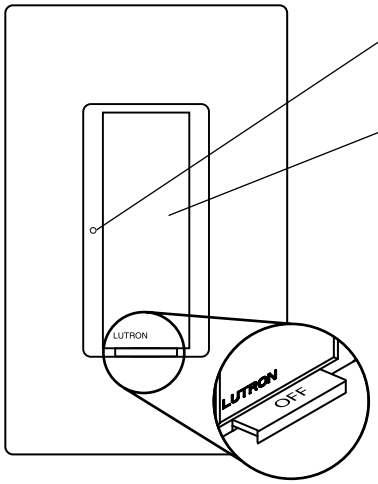

Status LED
(not on Remote Switches)
Indicates load status; glows softly as night light when light is off

Tapswitch
Tap on/off

FASS
Front Accessible Service Switch Or

RD-277 and RS-277 only

Fan Speed Control

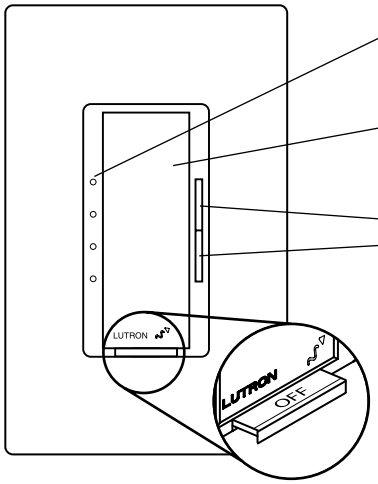

Status LEDs
Indicate speed level; glow softly as night light when fan is off

Tapswitch
Tap on/off

Speed Control Rocker
Press to increase speed
Press to decrease speed

FASS
Front Accessible Service Switch

Important Notice

FASS: Front Accessible Service Switch

To replace bulb, remove power by pulling the FASS out fully on all controlling devices.

After replacing bulb(s), push the FASS back in fully to restore power to the control(s).

RadioRA 2 RF Maestro Local Controls

Wiring Diagrams

Wiring Diagram 1

Single-Location Installation without Neutral[1]

-6CL, -10D, -PRO

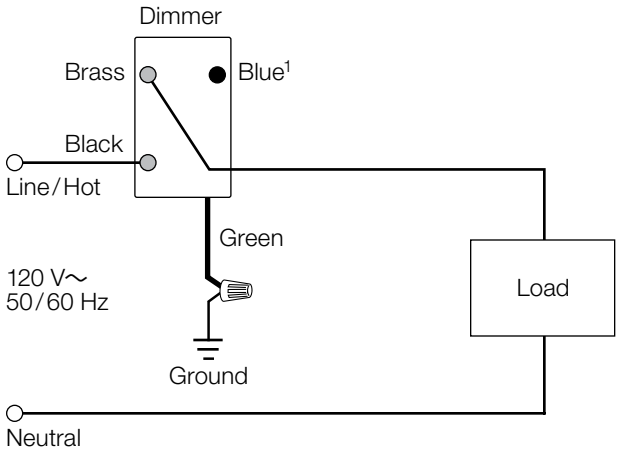

Wiring Diagram 2

Single-Location Installation with Neutral[1]

-10ND, -6ND, -6NA, -2ANF, -8ANS, -PRO

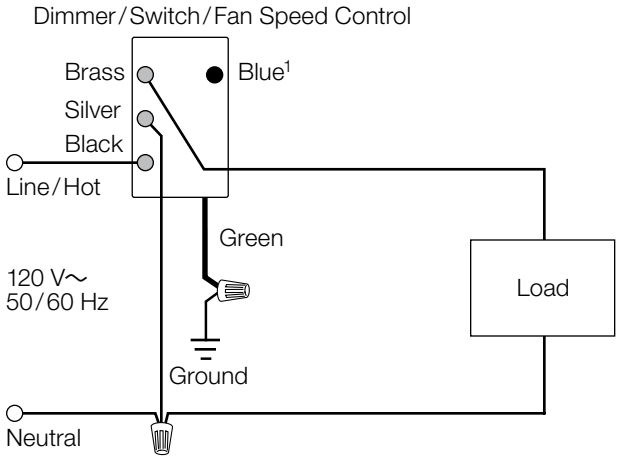

Wiring Diagram 3

Single-Location Fluorescent Dimmer Installation[1]

-F6AN-DV with Lutron Ballast/LED Driver

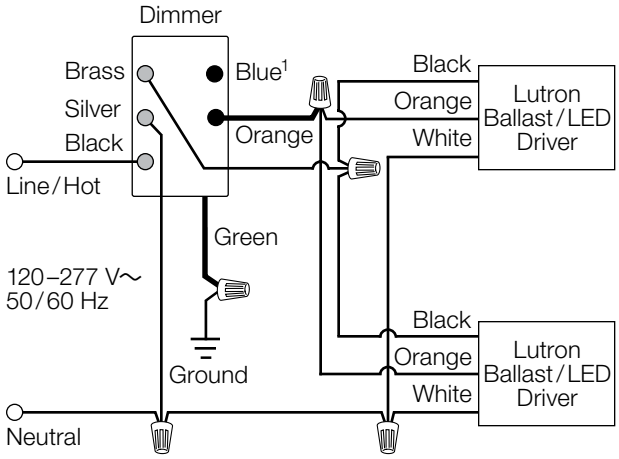

Wiring Diagram 4

Single-Location 2-Wire Switch Installation[1]

-8S-DV with Optional Shunt Capacitor[2]

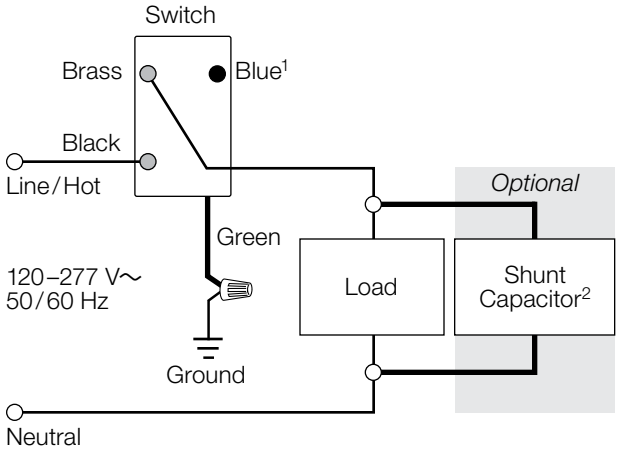

Note: Bolded lines in diagrams indicate leads on products.

1 When using controls in single-location installations, tighten the blue terminal. Do not connect the blue terminal to any other wiring or to ground.

2 Optional Shunt Capacitor must be installed inside the load fixture or in a separate J-box. Shunt capacitor is included with -8S-DV. If controlling Type B TLED bulbs, consult Application Note #812 (P/N 048812) on www.lutron.com

Continued on next page...

RadioRA 2 RF Maestro Local Controls

Wiring Diagrams (continued)

Wiring Diagram 5

Multi-Location Installation without Neutral[1]

-6CL, -10D, and -PRO with RD-RD

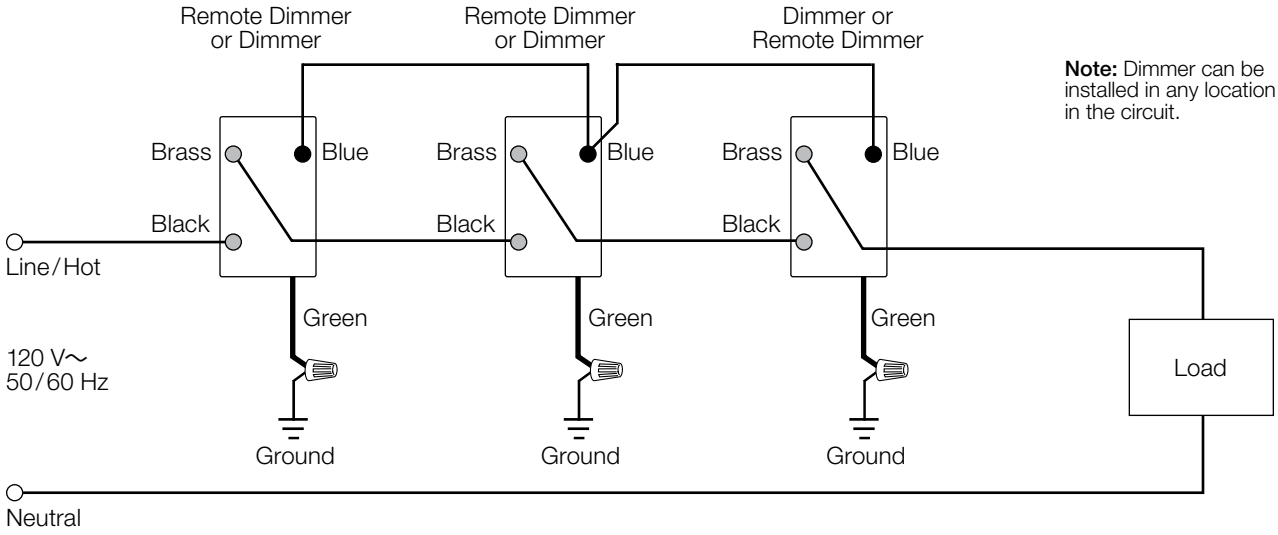

Wiring Diagram 6

Multi-Location Installation with Neutral[1,2]

-10ND, -6ND, -6NA, -PRO, and -2ANF with RD-RD; -8ANS with RD-RS

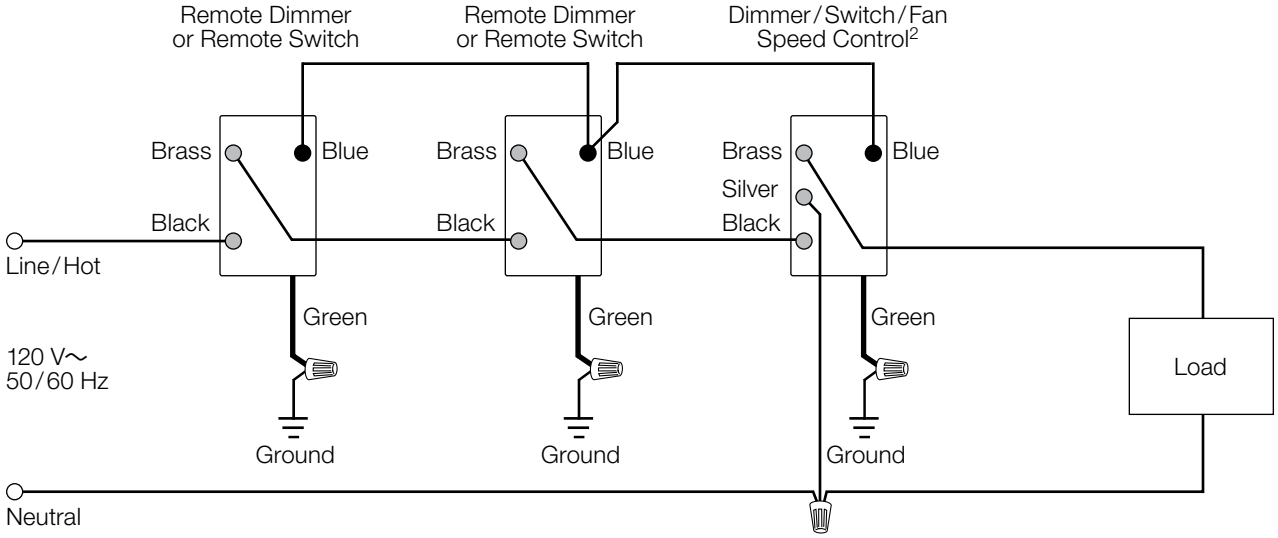

Note: Bolded lines in diagrams indicate leads on products.

1 Up to 9 Remote Dimmers/Remote Switches may be connected to the Dimmer/Switch/Fan Speed Controls. Total blue terminal wire length may be up to 250 ft (76 m), except for -PRO which is 150 ft (45 m).

2 Neutral-Wire Dimmers/Switches/Fan Speed Controls must be connected on the Load side of a multi-location installation, except -PRO which can be connected in any position.

Continued on next page...

RadioRA 2 RF Maestro Local Controls

Wiring Diagrams (continued)

Wiring Diagram 7

Multi-Location Fluorescent Dimmer Installation[1,2] (120 V~)

-F6AN with RD-RD and Lutron Ballast/LED Driver

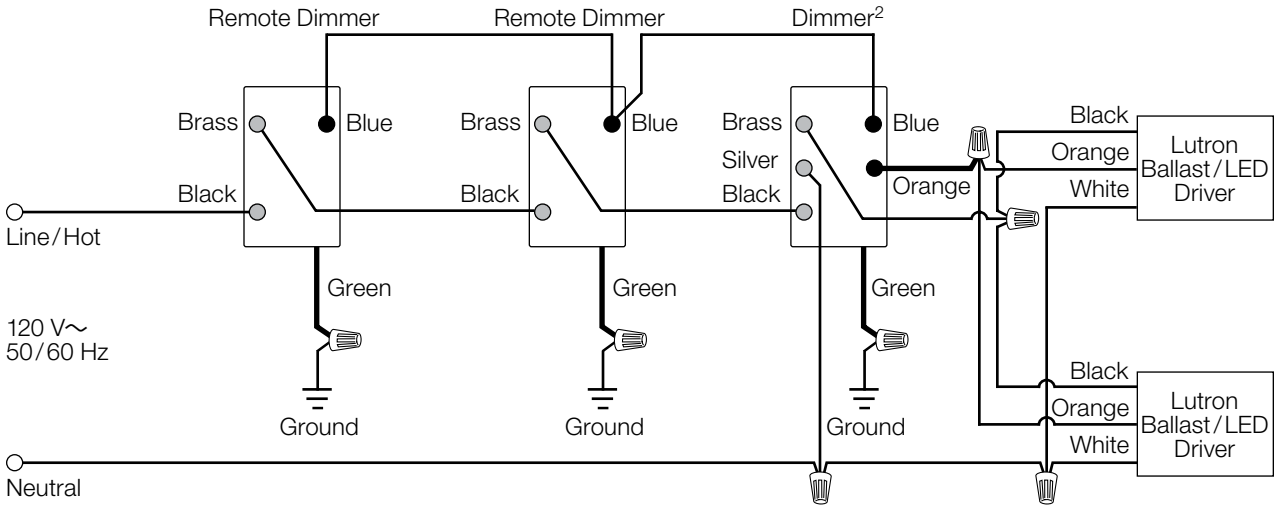

Wiring Diagram 8

Multi-Location Fluorescent Dimmer Installation[1,2] (277 V~)

-F6AN with RD-RD-277 and Lutron Ballast/LED Driver

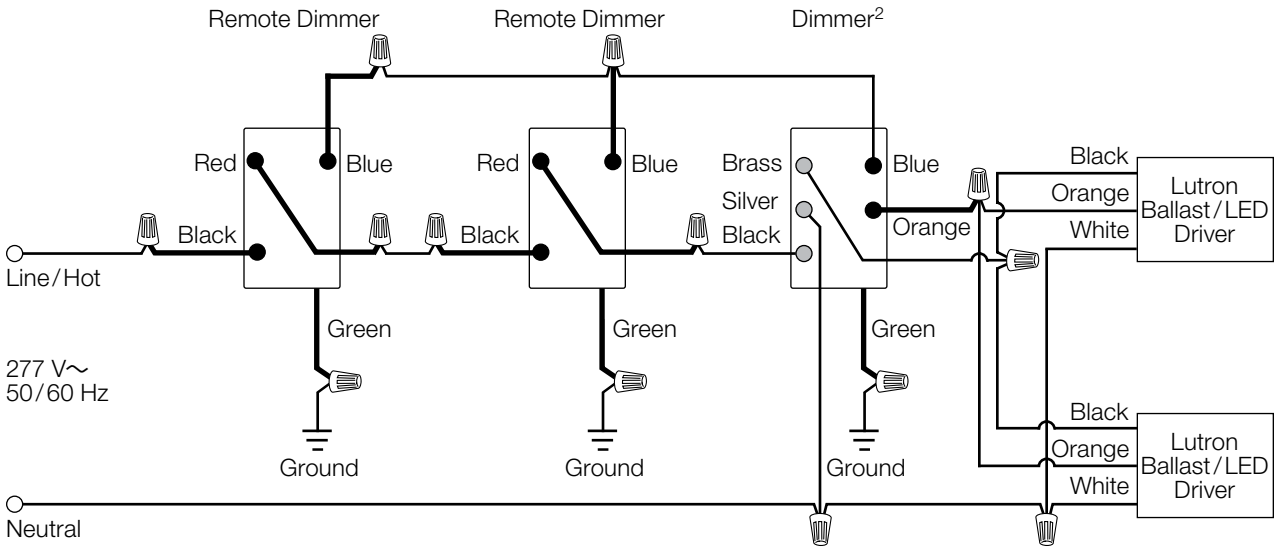

Note: Bolded lines in diagrams indicate leads on products.

1 Up to 9 Remote Dimmers/Remote Switches may be connected to the Dimmer/Switch/Fan Speed Controls. Total blue terminal wire length may be up to 250 ft (76 m), except for -PRO which is 150 ft (45 m).

2 Neutral-Wire Dimmers/Switches/Fan Speed Controls must be connected on the Load side of a multi-location installation, except the -PRO which can be connected in any position.

Continued on next page...

RadioRA 2 RF Maestro Local Controls

Wiring Diagrams (continued)

Wiring Diagram 9

Multi-Location 2-Wire Switch Installation[1] (120 V~)

-8S-DV with RD-RS and Optional Shunt Capacitor

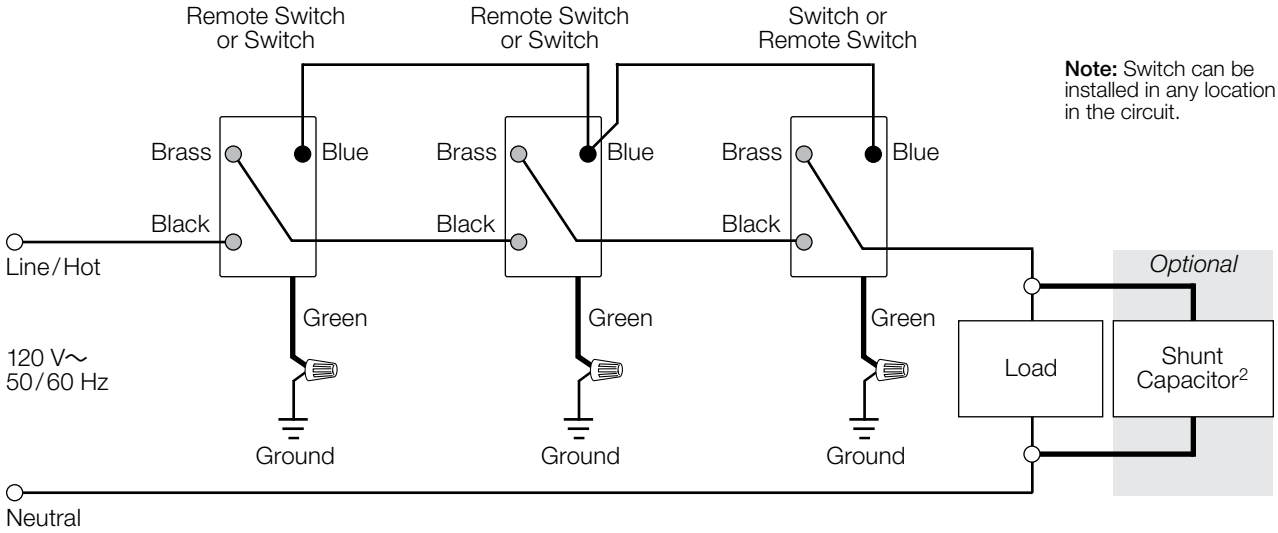

Wiring Diagram 10

Multi-Location 2-Wire Switch Installation[1] (277 V~)

-8S-DV with RD-RS-277 and Optional Shunt Capacitor

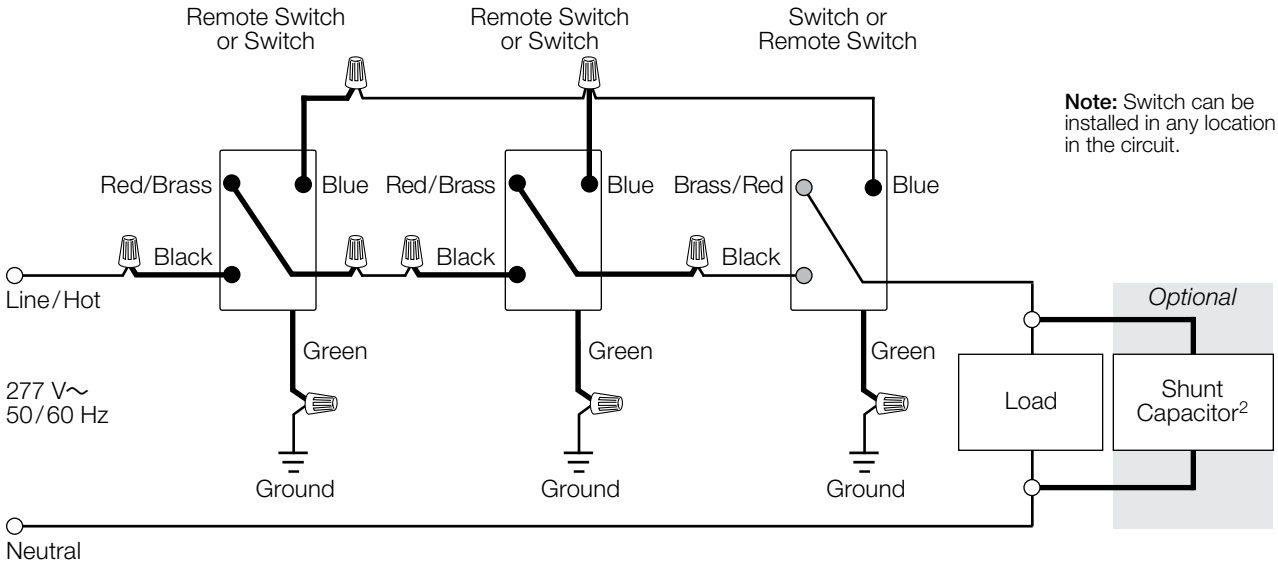

Note: Bolded lines in diagrams indicate leads on products.

1 Up to 9 Remote Dimmers/Remote Switches may be connected to the Dimmer/Switch/Fan Speed Controls. Total blue terminal wire length may be up to 250 ft (76 m), except for -PRO which is 150 ft (45 m).

2 Optional Shunt Capacitor must be installed inside the load fixture or in a separate J-box. Shunt capacitor (LUT-MLC) is included with 8S-DV. If controlling Type B TLED bulbs, consult Application Note #812 (P/N 048812) on www.lutron.com

RadioRA 2 RF Maestro Local Controls

Colors and Finishes

Gloss Finishes

White
WH

Ivory
IV

Almond
AL

Light Almond
LA

Gray
GR

Brown
BR

Black
BL

Satin Finishes

Snow
SW

Midnight
MN

Taupe
TP

Biscuit
BI

Palladium
PD

Hot
HT

For the latest color offerings see our website:
http://www.lutron.com/satincolors

Metal Finish (wallplate only)

Stainless Steel
SS

When using Stainless Steel wallplates, it is recommended that you order the control in Midnight (MN).

- Due to printing limitations, colors and finishes shown cannot be guaranteed to perfectly match actual product colors.
- Color chip keychains are available for more precise color matching:
  Gloss Finishes: DG-CK-1
  Satin Finishes: SC-CK-1

Lutron, Maestro, Claro, Satin Colors, Hi-lume, Hi-lume Compact SE, Eco-10, RadioRA, RadioRA 2, FASS, and EcoSystem are trademarks or registered trademarks of Lutron Electronics Co., Inc. in the US and/or other countries.
All other product names, logos, and brands are property of their respective owners.