Model No. **ADA-SS-TWR-72x4x6**

PRODUCT FEATURES

- Luxury aesthetics
- Antimicrobial surface
- Universal design
- Heavy duty materials
- Stainless steel construction
- Brushed #4 (180 grit)
- NDAA, Buy American, or USMCA/CUSMA compliant
- Build To Order (BTO)
- Available direct or through distribution
- ADA compliant

CUSTOM OPTIONS

- Customize device cutout
- Shorten or extend height
- Readily available powder coating colors (white, yellow, bronze, gray, silver)
- Choose any RAL powder color
- Change material to #316 stainless

DESCRIPTION

A stunning bollard for high end decor in lobbies and entryways. Serves as a beautiful showcase for entry/exit buttons, ADA actuators, card readers, and more. Standing approximately 72" tall, this remarkable pedestal comes with a cutout to receive any single gang device of your choice.

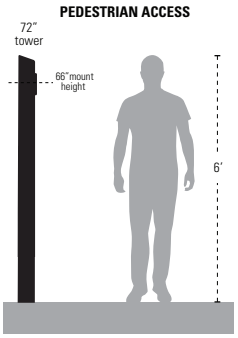

Download Pedestrian Height Chart for more details

RECOMMENDED ACCESSORIES

BOLT KIT

Stud-Anchor-500

BOLT KIT

L-Bolt-500

HEATER

ACC-HEA-001-304

COOLING FAN

ACC-FAN-001-304

BUFFER PLATE

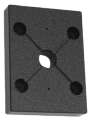

46PLA-PRO-001-HDP

SHIM KIT

Shim-Kit-001

NOTE: Real time inventory levels are viewable for registered users on pedestalpro.com

Model No. **ADA-SS-TWR-72x4x6**

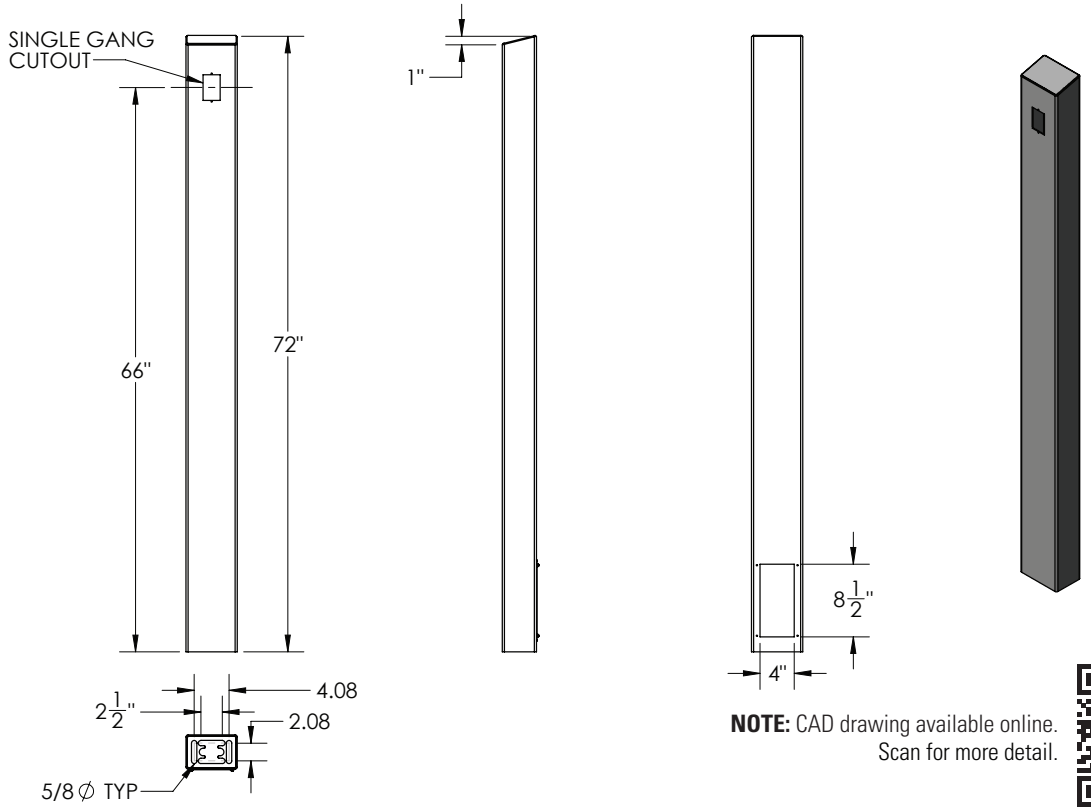

NOTE: CAD drawing available online. Scan for more detail.

DATA & SPECS

Product Style	Bollard
Material	#304 Stainless steel
Tube	4" x 6" x .120" wall, stainless steel #304
Face Plate	n/a
Base Plate	.25" plate, stainless steel #304
Cover Plate	.0749" (14 gauge) stainless steel #304
Mounting Method	Pad mount
Pretreatment	n/a
Finish	Brushed #4 (180 grit) with mirrored corner radiuses
UV Protection	n/a
Hardware	none
Packaging	Foam wrapped and boxed individually
Package Size	78 x 8 x 6
Weight	55 lbs
Shipping Method	UPS, FedEx, or LTL freight
Compliance	NDAA, Buy American, or USMCA/CUSMA (see website for details)
Warranty	1 year limited (see website for details)
Inventory Status	Build To Order (Fast Track production is available)

SIMILAR PRODUCTS

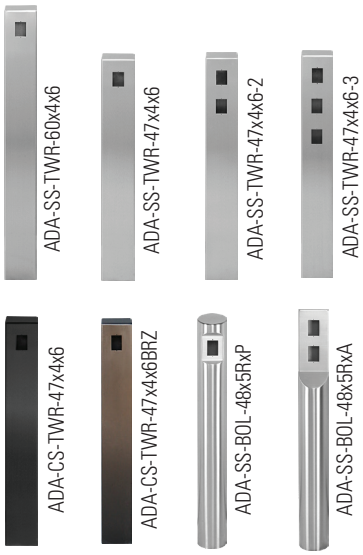

947 W 500 N | Suite 101 | Lindon, Utah | 84042 800.660.3072 | info@pedestalpro.com **pedestalpro.com**