Web Guide

WV-U25551-V3L/ WV-U25351-V3L/ WV-U25751-V3L/ WV-U25550-F3L/ WV-U25350-F3L

Ver 1.0

Contents

1. Set up 1

1.1 Recommended Procedures for Installing this product 1

2. Connect to the camera 2

2.1 i-PRO Configuration Tool (iCT) 2

2.2 IP Setting Software 2

2.3 Access the camera 2

2.4 About Live image pages 4

3. Set the camera 6

3.1 Check whether the object is of the proper size. 6

3.2 Adjust the image quality 6

3.2.1 Set the light intensity control mode depending on the installation location and installation area. 6

3.2.2 Set white balance depending on the lighting environment you install. 7

3.2.3 Sets night time black-and-white switching mode 8

3.3 Recording setting (SD Memory Card) 9

3.3.1 Install the SD Memory Card 9

3.3.2 Record using SD Memory Card 9

3.3.3 Play back images stored on the SD Memory Card 9

3.4 Adjust the zoom/focus 10

3.5 Hide some of the images 10

3.6 Identify sounds with AI 11

3.7 Record sound 11

3.8 Set up events 12

3.8.1 Detect object movements 12

3.9 Enhance communication security 13

3.10 Detect data falsification 13

3.11 Set the Image capture size and frame rates 13

3.12 Set the overlay image function 14
3.13 Set the image stream 14
3.13.1 About Stream Settings 14
3.13.2 About delivery volume control (bit rate) 14
3.13.3 Reducing Data Capacity with Smart Coding 15
3.14 Set the AI-VMD 16
3.14.1 Manage the AI-VMD 16
3.14.2 Scheduling a AI-VMD 17

4. Clean up 18

4.1 Cleaning of lenses 18

5. Specifications 19

5.1 PC environment required 19
5.2 About Image capture mode and Image capture size 20
5.2.1 Image capture size 20
5.2.2 Restrictions 21
5.3 DORI 22
5.4 Streaming performance 23
5.5 Extension software (AI application) 23
5.6 Lamp 24
5.6.1 Lighting the Lamp 28
5.7 Button 28
5.8 Cable 32

6. Other 34

6.1 Initialize 34
6.2 Check the software version 34
6.3 Upgrade software 35
6.4 Order of setting when adjusting image quality 35
6.5 Adjusting object brightness (bright scenes) 36
6.5.1 Adjusting brightness 36
6.6 Adjusting object brightness (dark scenes) 36
6.6.1 Adjust the maximum gain 36
6.6.2 Adjust the maximum shutter 37

6.7 Reducing white flickering and blacking on the screen 37
6.7.1 Set Super Dynamic 37
6.7.2 Set the backlight compensation 38
6.7.3 Set the high light compensation 39
6.7.4 Adjust the adaptive black stretch 39
6.7.5 Adjust the [Pedestal level] 40
6.8 Adjust the object contrast 40
6.8.1 Adjust the contrast 40
6.9 Reduce flicker 41
6.10 Reducing the blur of object (bright scenes) 41
6.10.1 Set intelligent auto (motion priority level) 41
6.10.2 Adjust the maximum shutter 42
6.11 Reducing object blur (dark scenes) 43
6.11.1 Adjust digital noise reduction 43
6.12 Sharpen the outline of the subject 43
6.12.1 Adjust the sharpness level 43
6.13 Adjust the color 44
6.13.1 Adjust color density 44
6.13.2 Adjust the white balance 44
6.14 Reducing object noise (bright scenes) 45
6.14.1 Adjust the sharpness level 45
6.15 Reducing object noise (dark scenes) 45
6.15.1 Adjust digital noise reduction 45
6.16 Set focus when switching between black and white. 46
6.16.1 Focus adjustment method for switching between black and white 46
6.17 Troubleshooting 47
6.18 Precautions pertaining to usage 50
6.19 Disclaimer 52
6.20 For trademarks and registered trademarks 53
6.21 NETWORK RELATIONSHIP 53

1. Set up

For detailed installation instructions, refer to the following:

Installation section

1.1 Recommended Procedures for Installing this product

The URL of the video is as follows.

https://www.youtube.com/playlist?list=PLTQfvt0fJHvBPqSZ58IFN-hyJ92hU2kwz

2. Connect to the camera

2.1 i-PRO Configuration Tool (iCT)

This is a tool for managing the image monitoring system at a glance.

For more information about i-PRO Configuration Tool (iCT), see the Technical Information website at <Control No.: C0133>.
→Click here for more information about i-PRO Configuration Tool

2.2 IP Setting Software

Cameras or recorders on the same network can be automatically detected and set up in the network.

For more information on the IP Setting Software, see the Technical Information website at <Control No.: C0123>.
→Click here for more information on the IP Setting Software

2.3 Access the camera

1. Launch a IP Setting Software
   - The model number and MAC address of the detected camera are displayed.
   - The default for [Network Settings] is [DHCP].

・If you cannot obtain an IP address from the DHCP server, set the IP address to 192.168.0.10.

2. Double-click on the camera's IP address
   - The browser starts and the administrator registration screen is displayed.
   - You need to register as an administrator.

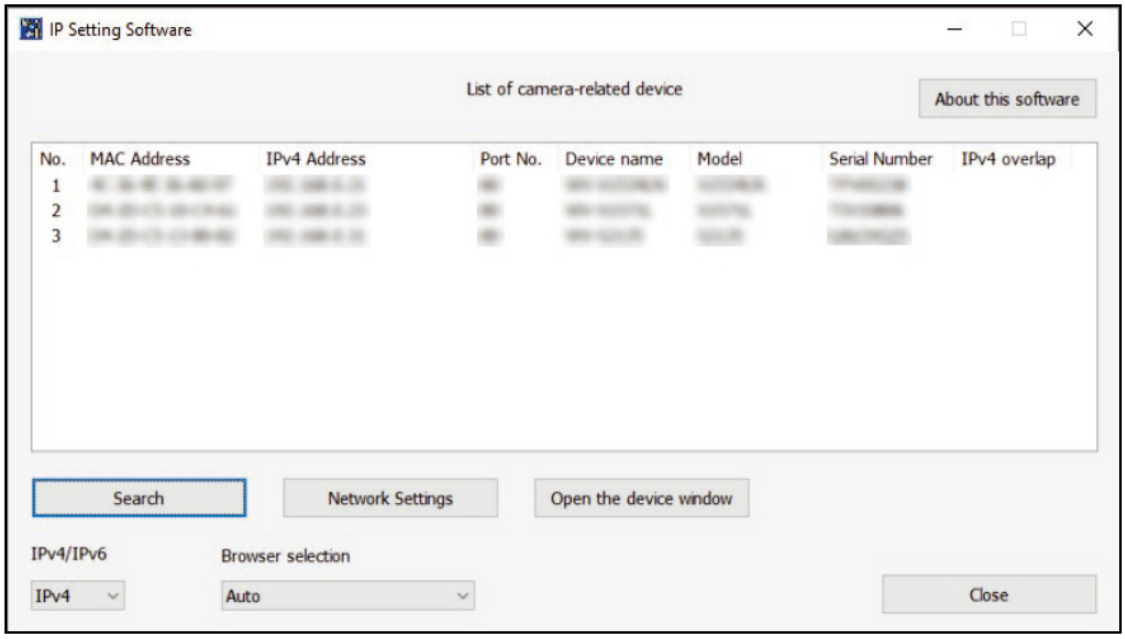

3. Enter administrator username and password
   - The screen for setting the language and date and time is displayed.
4. Set the language, date and time, and screen
   - You can set the language and date and time and change the background color of the screen and the layout of the operation panel.
5. Press [Set]
   - Live image pages is displayed.

2.4 About Live image pages

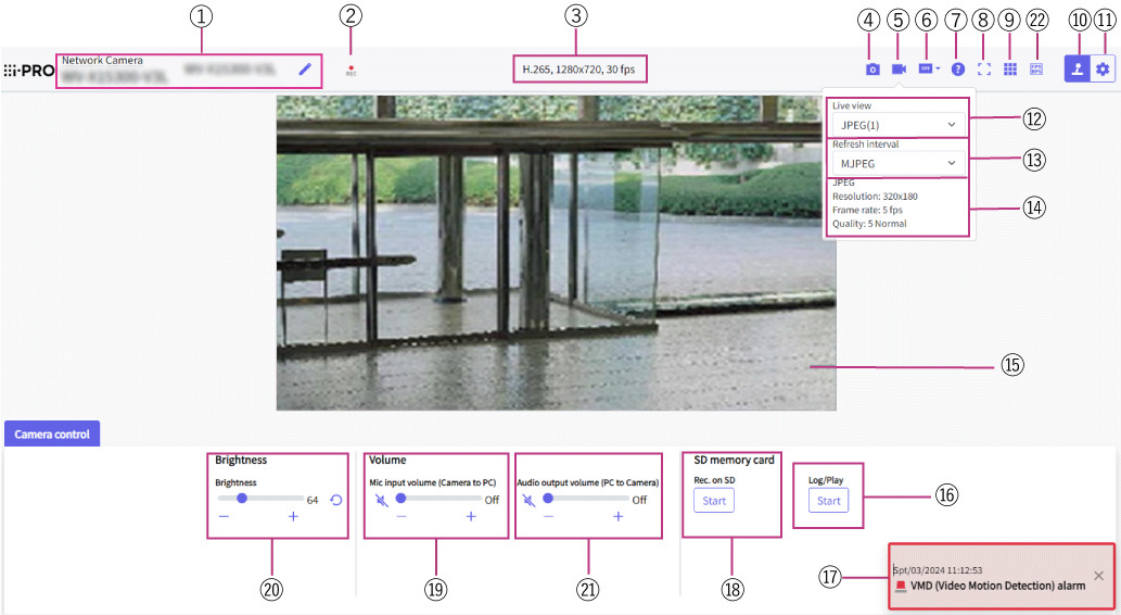

① Camera title

② SD storage status display

③ Stream information display

④ Snapshot button

⑤ Stream selection display button

⑥ Before/after image comparison switching button

⑦ Support button

⑧ Full Screen View button

⑨ Grid view button

⑩ Camera control panel display button

⑪ [Setup] buttons (Settings panel display button)

⑫ Select Streams-[Live only] pull-down menu

⑬ Select Streams-[Refresh Rate] pull-down menu

⑭ Select Stream-Display Stream Information

⑮ Main area

⑯ Camera Control Panel-SD Memory Card-[Log/Play] button

⑰ Alarm notification

⑱ Camera Control Panel-SD Memory Card-[Rec. on SD] button

⑲ Camera Control Panel-[Mic input volume (Camera to PC)]

⑳ Camera Control Panel-[Brightness]

㉑ Camera Control Panel-[Audio output volume (PC to Camera)]

㉒ Frame rate/bit rate display button

3. Set the camera

3.1 Check whether the object is of the proper size.

When using our Extension software, you can check the number of grids to see if it is the right size to recognize object. Refer to <Control No.: C0320> on the following technical information website.
→For more information about the recommended sizes of Extension software

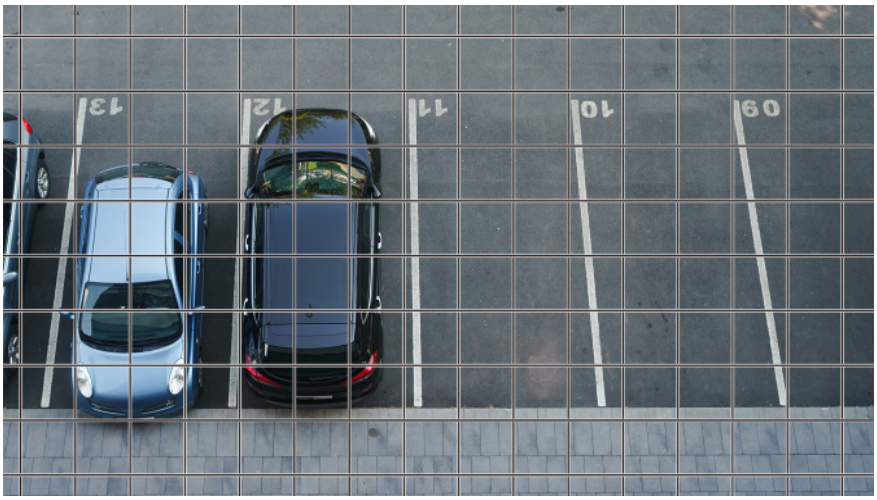

3.2 Adjust the image quality

This section explains how to adjust the image quality when installing the camera.

3.2.1 Set the light intensity control mode depending on the installation location and installation area.

Use [Light control mode] to set the light intensity appropriate for the installation location and area.

➢ Live image pages configuration panels>Clicking the [Image quality] tabs enables you to set the image quality.

1. Select [Light control mode]
   - To install outdoors: Set [Outdoor scene].
   - For indoor installation: Set [Indoor scene(50Hz)] or [Indoor scene(60Hz)].
     50 Hz/60 Hz can be used differently depending on the region.

・Basically, [Fix shutter] is not used.
・For more information about the light control mode, refer to the User Manual.

3.2.2 Set white balance depending on the lighting environment you install.

Use [White balance] to set the white balances appropriate for the installation location and area.

➢ Live image pages configuration panels>[Detailed setting]>[Camera detailed setting]>[Image] or [Image/Audio] of the Advanced menus on the left>[Image adjust] in the [Image quality] tabs>When [Setup] is clicked, the image quality adjustment setting window is displayed.

1. Select [White balance]
   - Select from [ATW1], [ATW2], and [AWC].

[ATW1]

Set the automatic color temperature tracking mode. The camera continuously checks the color temperature of the light source and automatically adjusts the white balance.
The operating range is about 2700 K to 6000 K.

[ATW2]

Set the automatic color temperature tracking mode. The camera automatically adjusts the white balance under a sodium lamp.
The operating range is from about 2000 K to 6000 K.

[AWC]

Set the automatic white balance control mode. Since the light source is fixed, it is suitable for shooting in a place where the lighting environment does not change.
The operating range is from approximately 2000 K to 10000 K.

Colors may not be reproducible faithfully if the following conditions are met: In such cases, set it to [AWC].
・Largely dark object
・Clear blue sky or the sun at dusk

・Object with too low illumination

3.2.3 Sets night time black-and-white switching mode

You can switch to color or black-and-white images by using [Day & Night(IR)] when shooting at night.

➢ Live image pages configuration panels>Clicking the [Image quality] tabs enables you to set the image quality.

1. Select [Day & Night(IR)]
   - Select [Off], [On(IR Light Off)], [On(IR Light On)], [Auto1(IR Light Off)], [Auto2(IR Light On)], and [Auto3(SCC)].

[Off]

This function is used for shooting colored images at night as well.

[On(IR Light Off)]

The picture is always taken in black and white.

[On(IR Light On)]

The picture is always taken in black and white. This setting is used when near-infrared lighting is used at night.

[Auto1(IR Light Off)]

The color image and black-and-white image are automatically switched depending on the brightness (illumination) of the image.

[Auto2(IR Light On)]

The color image and black-and-white image are automatically switched depending on the brightness (illumination) of the image. This is set when the near-infrared illumination is used at night.

[Auto3(SCC)]

Set this when you want to maintain a color image even when the light source is dark. The Super Chroma Compensation (SCC) function maintains the color image to low illumination.

3.3 Recording setting（SD Memory Card）

3.3.1 Install the SD Memory Card

1. Insert a microSD memory card into the slot

Use the SD Memory Card formatted on this product.

To remove the SD Memory Card, [Basic] the Advanced menu.>On the [SD memory card] tab, select [SD memory card] as [Not use]. Remove the SD Memory Card from this product.

3.3.2 Record using SD Memory Card

This section describes the procedures for turning [Save trigger] to [Manual].

➢ Live image pages configuration panels>[Detailed setting]>[Camera detailed setting]> [Basic] of the Advanced menus on the left>When [SD memory card] tab is clicked, the SD Memory Card setup page is displayed.

(1) Select [Recording format] streams

(2) Select [Save trigger] and click [Set].

(3) Click [Live] in the upper left corner and click the camera control panel display button.

- The camera control panel is displayed.

(4) Clicking [Start] on [Rec. on SD]

- Start recording to the SD Memory Card manually.
- You can stop recording by clicking [Stop]. After stopping, you can resume recording by clicking [Start].

3.3.3 Play back images stored on the SD Memory Card

You can play back images stored on the SD Memory Card.

➢ Live image pages cameras control panels>Clicking [Log/Play] displays the log list.

1. View Live image pages and click the camera contol panel display button.

2. Press the [Start] on [Log/Play] button
   - The Log List screen is displayed in a separate window.
3. Press the shooting date and time displayed below [Time & date]
   - The playback page is displayed and the saved image is played.

3.4 Adjust the zoom/focus

You can manually or automatically adjust the zoom or focus of the displayed image.

➢ Live image pages settings pane>Clicking [Zoom] displays the setting window.

1. Adjust [Zoom ratio designation], [Zoom], [Focus], and [Auto focus]

・For more information about zoom and focus, refer to the User Manual.

3.5 Hide some of the images

If you set the area to be hidden, you can move the camera's field angle while holding the area to be hidden.

➢ Live image pages configuration panels>[Detailed setting]>[Camera detailed setting]> [Image/Audio] of the Advanced menus on the left>[Privacy zone] in the [Image quality] tabs> When [Setup] is clicked, the Privacy Zone setting window is displayed.

1. Specify four vertices on the image and press [Set] button.
   - Privacy zones are set in order from Area 1.
2. Select [Status] to view privacy zones
   - Set up the privacy zone in [On]/[Off].

3.6 Identify sounds with AI

Image monitoring can be enhanced by identifying and detecting human cries, broken glass sounds, horns, guns, and other sounds.

➢ Live image pages configuration panels>[Detail setting]>[Camera detailed setting]>[Alarm] of the Advanced menus on the left>Clicking on the [Audio detection] tabs displays the configuration pages.

AI Sound ClassificationSee below for more information.
→WHITE PAPER

1. Set [Audio detection] to [On] to set sound detection.
2. Select Sensitivity of Detection with [Detection sensitivity].
3. Select the sound to be detected by [AI analytics target].
   - Selection of [Other] is not recommended in conjunction with other sounds detected. For example, when a gun sound is detected with the settings for detecting two sounds: [Gunshot] and [Other], it is detected as two sounds.

For validated external microphones, see below.
→Verification result of external microphones

3.7 Record sound

Audio data can be recorded to SD recording when alarm is detected.

1. Select whether to record audio data in the SD Memory Card setup page.
   - [On] saves audio data in a movie (MP4 format).
   - [Off]: Audio data is not saved in movies (MP4 format).

3.8 Set up events

You can set the alarm to detect the operation of an area or interference to the camera, or the operation when the alarm is detected.

➢ Live image pages configuration panels>[Detailed setting]>[Camera detailed setting]>[Easy Setup] of the Advanced menus on the left>Clicking on the [Event action] tabs displays the configuration pages.

・Refer to the User Manual for instructions on configuring events.
・Refer to the User Manual for instructions on how to configure Internet disclosure.

3.8.1 Detect object movements

When an alarm is activated, the camera operates as set. There are patterns for the alarms when the specified area moves and when the camera is blocked.

➢ Live image pages configuration panels>[Detailed setting]>[Camera detailed setting]>[Alarm] of the Advanced menus on the left>Clicking on the [VMD area] tabs displays the configuration pages.

Refer to the user manual for details of all alarms.

3.8.1.1 Set the area for detecting the movement of an object

Set the area for detecting the movement of an object using the motion detection function using video images.

1. Drag through the image to set the area.
   - You can set the areas in order.
2. Adjust the [Detection area] and [Detection sensitivity] using the slider bar and then press [Set].

3.9 Enhance communication security

Setting up HTTPS encrypts camera access and enhances communication security.

- Refer to the following support videos for the HTTPS setting method (pre-installation).
  →Support video
- For information about how to configure HTTPS (CA certificate), refer to the following supported videos.
  →Support video

3.10 Detect data falsification

If you set Falsification Detection, you can detect the falsified data on the SD Memory Card using the dedicated software.
Refer to the following support videos for how to set up tampering detection.
→Support video

3.11 Set the Image capture size and frame rates

➢ Live image pages configuration panels>[Stream] tabs>Set in [Image capture mode] of [Common].

- For details on the settings and frame rates, refer to the user manual.
- For details on the resolution, see the following:
  →About Image capture mode and Image capture size

3.12 Set the overlay image function

You can specify the position to overlay the uploaded image or specify the color to be transmitted. In the model where the SD Memory Card can be recorded, the overlay displayed images are recorded during recording.

Refer to the User Manual for details on how to configure the settings.

➢ Live image pages configuration panels>[Detail setting]>[Camera detailed setting]>[Basic] of the Advanced menus on the left>Configure in the [Overlay image] tabs.

1. Select an image with [Overlay] set to [On].
2. Set [Position], [Permeation], and [Selection of color to be penetrated]
3. Press [Set]

3.13 Set the image stream

3.13.1 About Stream Settings

You can configure whether to deliver streams, whether to compress streams with H.265 or H.264,Image capture size, image quality, and how to deliver streams.

➢ Live image pages configuration panels>Use the [Stream] tabs. The streams of H.265 and H.264 images are set in [Stream] on the [Stream] tabs.

- For the image compression method, refer to the following.
  →3.13.2 About delivery volume control (bit rate)
- Refer to the following for how to distribute.
  →3.13.3 Reducing Data Capacity with Smart Coding
- Refer to the User Manual for details of each setting method.

3.13.2 About delivery volume control (bit rate)

The following types of delivery modes are used to control the amount of delivery (bit rate) of thestream, and settings are made accordingly. You can also use smart coding, such as [Smart VIQS],to reduce the amount of data. For information about controlling the amount of stream delivery,see the following. Refer to the User Manual for details.

→3.13.3 Reducing Data Capacity with Smart Coding

- Constant bit rate :
  The H.265 (or H.264) images are delivered at the bit rate set by [Max bit rate (per client) *].
- VBR :
  The H.265 (or H.264) images are delivered at the frame rate set by [Frame rate*] while maintaining the image quality level set by [Image quality]. At this time, the bit rate is varied within the maximum bit rate set by [Max bit rate (per client) *]. The recording capacity varies depending on the [Image quality] settings and the object status.
- Frame rate :
  H.265 (or H.264) images are delivered at the frame rate set by [Frame rate*].
- Best effort :
  Depending on the bandwidth of the networks, H.265 (or H.264) images are delivered with varying bit rates within the maximum bit rate set by [Max bit rate (per client) *].

3.13.3 Reducing Data Capacity with Smart Coding

Smart coding is a data-compression technique that optimizes the compression ratio by reducing compression and high compression in the background to clearly show the human face, and by object.

➢ Live image pages configuration panels>[Detail setting]>[Camera detailed setting]>[Image] or [Image/Audio] of the Advanced menus on the left>Clicking [Image] displays the Smart Coding configuration.

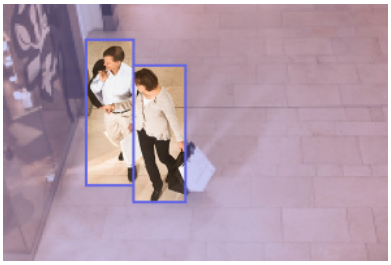

This image is an image. This is different from the actual view of the screen.

[Smart VIQS]

The image quality of the area where the object (head, people, automobiles, and motorcycles) is displayed is maintained at a high level. Images other than objects are delivered in such a way that low or medium image quality is maintained and the amount of data is reduced.

[Smart P-picture control]

In order to reduce the amount of data, data generation (macroblock) is reduced in areas other than where objects (head, people, automobiles, and motorcycles) are displayed.

[GOP control]

You can reduce the amount of data.

3.14 Set the AI-VMD

The AI-VMD page allows you to manage and schedule AI-VMD.

➢ Live image pages settings panels>[Detail setting]>[Camera detailed setting]>Clicking [AI-VMD] in the Advanced menu on the left displays the tabbed pages for the respective function.

3.14.1 Manage the AI-VMD

The AI-VMD will be updated. The [AI-VMD setup menu] can be displayed by clicking [Setup >>] in the [Setup menu], and the [AI-VMD] settings can be configured.

➢ Live image pages settings pane>[Detailed setting]>[Camera detailed setting]>[AI-VMD] in the advanced settings menu on the left>Clicking the [AI-VMD mng.] tab. The setting page is displayed.

1. Downloading the most recent AI-VMD to the PC
2. Click [Select File] to specify the downloaded [AI-VMD].
3. Make sure that [Upgrade AI-VMD] is selected and then press [Execute].
   - The [AI-VMD] version is upgraded.
4. By clicking [Setup >>] in the [Setup menu]
   - Displays [AI-VMD setup menu] and allows you to set [AI-VMD].

- Please use the most recent version of AI-VMD.
- When using AI-VMD, free RAM space must be at least 50MB.
- If there is not enough RAM space available, AI-VMD cannot be used. If you want to use the AI-VMD, uninstall the Extension software installed on the [Software mng.] tab. Alternatively, set [RAM capacity expansion mode] to [On].

・For more information about [AI-VMD setup menu], see "3.2 Choosing Behavior" and subsequent sections of this section.
→https://i-pro.com/products_and_solutions/en/surveillance/media/documentation_file/doc/support_and_documentation/ai-vmd-webguide-en-pdf

3.14.2 Scheduling a AI-VMD

You can set the AI-VMD operation by specifying the day of the week and the hour.

➢ Live image pages settings pane>[Detail setting]>[Camera detailed setting]>[AI-VMD] in the advanced settings menu on the left>Clicking [Operation sched.] displays the settings page.

1. In the [Operating day of week], select the days of the week and the timetable for which you want to schedule.
2. In the [Time table 1] [Time table 2], specify the timezone to operate.
3. Press the [Set] key

・To operate the AI-VMD for 24 hours, set [00:00] to [00:00].

4. Clean up

- Turn off the power before starting operation. Doing so may result in injury.
- Do not apply or use organic solvents such as benzene and thinner. The enclosure may become discolored. Follow the precautionary statement when using chemical foil.
- Do not loosen or remove the screws not specified in the operation manual.

4.1 Cleaning of lenses

- Clean with lens cleaning paper (for cleaning cameras and eyeglasses).
- Alcohols should be used when solvents are used. Do not use glass cleaners or thinners.

5. Specifications

5.1 PC environment required

CPU:	Intel® Core™ Processor family
	<When using an image capture size of 1920 x 1080 or lower>
	-Intel® Core™ i5-6500 or more
	-Intel® Core™ i7-6700 or higher recommended
	<When using an image capture size higher than 1920 x 1080>
	-Intel® Core™ i7-11700 or higher recommended
Memory:	<When using an image capture size of 1920 x 1080 or lower>
	Recommended at least 4 GB (2 GB x 2, dual channel)
	<When using an image capture size higher than 1920 x 1080>
	Recommended at least 16 GB (8 GB x 2, dual channel)
Network function:	10BASE-T/100BASE-TX/1000BASE-T 1 port
Sound function:	Sound Card (for voice function)
Image display function:	Image capture size: 1920 x 1080 pixels or more
	<When using an image capture size of 3840 x 2160>
	High Image capture size monitoring: 3840 x 2160 pixels or more
	Color: 24 bits or more of True Color
Compatible OS:	Microsoft Windows 11
	Microsoft Windows 10
Web browser:	Google Chrome™
	Firefox
	Microsoft Edge (after Chromium)
Other:	Adobe® Reader® or Acrobat Reader® (For viewing PDF files)

5.2 About Image capture mode and Image capture size

- The bit rate of streams is restricted to [Bandwidth control(bit rate)] on the [Network] tabs of network pages.
- If the refresh interval is short, the bit rate may be exceeded depending on the object.
- Depending on the number of concurrent users or the combination of functions used, the bit rate may be lower than the set value. Confirm the image delivered after setting.

5.2.1 Image capture size

It's Image capture size. The initial value is underlined.

WV-U25751-V3L

Imaging mode	Stream (1)	Streams(2)	Streams(3)	Streams(4)	JPEG(1)*1	JPEG(2)
16:9(15fps) 16:9(12.5fps)	3840x2160 2560x1440 1920x1080 1280x720	 1280x720 640x360 320x180*2	 640x360 320x180*2	 640x360 320x180*2	3840x2160 2560x1440 1920x1080 1280x720 640x360 320x180*2	 640x360
	Max 15(12.5) fps	Max 15(12.5) fps	Max 15(12.5) fps	Max 15(12.5) fps	Max 5(4.2) fps *3*4*5	Max 15(12.5) fps

*1 You can select the same resolution as that set for stream (1), stream (2), stream (3), stream (4), and JPEG (2).

*2 When the picture resolution is "320x180", "90° " and "270° " cannot be set in [Image rotation].

*3 When the image resolution is "3840 x 2160", the image refresh rate is limited to the largest 1fps.

*4 When the image resolution is "2560 x 1440", the image refresh rate is limited to the largest 2fps(2.1fps).

*5 If [Stream transmission] is set to [Off], the max. frame rate is 15 fps(12.5 fps).

*1 You can select the same resolution as that set for stream (1), stream (2), stream (3), stream (4), and JPEG (2).

*2 When "4:3" is selected in "Imaging Mode", "90° " and "270° " are not available in [Image rotation].

*3 When the picture resolution is "320x180", "90° " and "270° " cannot be set in [Image rotation].

*4 When the image resolution is "2560 x 1440 (2560 x 1920, 2592 x 1944)", the image refresh rate is limited to the largest 2fps(2.1fps).

*5 If [Stream transmission] is set to [Off], the max. frame rate is 30 fps(25 fps).

*6 If [Stream transmission] is set to [Off], the max. frame rate is 15 fps(12.5 fps).

WV-U25351-V3L,WV-U25350-F3L

Imaging mode	Stream (1)	Streams(2)	Streams(3)	Streams(4)	JPEG(1)	JPEG(2)
16:9(30fps) 16:9(25fps)	1920x1080 1280x720 640x360 320x180*2	1920x1080 1280x720 640x360 320x180*2	1280x720 640x360 320x180*2	640x360 320x180*2	1920x1080 1280x720 640x360 320x180*2	640x360
	Max 30(25) fps	Max 30(25) fps	Max 30(25) fps	Max 30(25) fps	Max 5(4.2) fps*3	Max 15(12.5) fps*3
4:3(30fps)*1 4:3(25fps)*1	1280x960 640x480 320x240	1280x960 640x480 320x240	640x480 320x240	640x480 320x240	1280x960 640x480 320x240	640x480
	Max 30(25) fps	Max 30(25) fps	Max 30(25) fps	Max 30(25) fps	Max 5(4.2) fps*3	Max 15(12.5) fps*3

*1 When "4:3 (30fps/25fps)" is selected for "Imaging mode", "90° " and "270° " cannot be set for [Image rotation].

*2 When the picture resolution is "320x180", "90° " and "270° " cannot be set in [Image rotation].

*3 If [Stream transmission] is set to [Off], the max. frame rate is 30 fps(25 fps).

5.2.2 Restrictions

	WV-U25751-V3L	WV-U25551-V3L WV-U25550-F3L		WV-U25351-V3L WV-U25350-F3L
Function	16:9(15/12.5fps)	16:9(30/25fps) 4:3(30/25fps)	4:3(15/12.5fps)	16:9(30/25fps) 4:3(30/25fps)
Extension software	Yes	Yes	Yes	Yes
AI-VMD	Yes*1	Yes*1	Yes*1	Yes*1

	WV-U25751-V3L	WV-U25551-V3L WV-U25550-F3L		WV-U25351-V3L WV-U25350-F3L
Image rotation	Yes*2	Yes*2	Yes*2	Yes*2
SD recording	Yes	Yes	Yes	Yes
Smart coding	Yes	Yes	Yes	Yes
Super Dynamic	Yes	Yes	Yes	Yes
Intelligent auto	Yes	Yes	Yes	Yes
Privacy zone	Yes	Yes	Yes	Yes
Remote Monitoring	Yes*3	Yes*3*4	Yes*3*4	Yes*3*4

*1 When "Remote Monitoring" is set to "Enable", "AI-VMD" cannot be used.

*2 When "4:3" is selected for "Image capture mode", the "90° " or "270° " cannot be set for "Image rotation".

*3 When "AI-VMD" is running, "Remote Monitoring" cannot be used.

*4 When "RAM capacity expansion mode" is set to "On", you cannot use "Remote Monitoring".

5.3 DORI

WV-U25751-V3L

	WIDE	TELE
Detect (25 ppm/8 ppf)	53.8 m {176.4 ft}	286.6 m {940.4 ft}
Observe (62.5 ppm/19 ppf)	21.5 m {70.6 ft}	114.6 m {376.1 ft}
Recognize (125 ppm/38 ppf)	10.4 m {34.0 ft}	57.3 m {188.1 ft}
Identify (250 ppm/76 ppf)	5.2 m {17.0 ft}	28.7 m {94.0 ft}

WV-U25551-V3L

	WIDE	TELE
Detect (25 ppm/8 ppf)	43.7 m {143.5 ft}	205.4 m {673.7 ft}
Observe (62.5 ppm/19 ppf)	17.5 m {57.4 ft}	82.1 m {269.5 ft}
Recognize (125 ppm/38 ppf)	8.7 m {28.7 ft}	41.1 m {134.7 ft}
Identify (250 ppm/76 ppf)	4.4 m {14.3 ft}	20.5 m {67.4 ft}

WV-U25550-F3L

	WIDE
Detect (25 ppm/8 ppf)	46.1 m {151.2 ft}

WV-U25550-F3L *(continued)*

Observe (62.5 ppm/19 ppf)	18.4 m {60.5 ft}
Recognize (125 ppm/38 ppf)	9.2 m {30.2 ft}
Identify (250 ppm/76 ppf)	4.6 m {15.1 ft}

WV-U25351-V3L

	WIDE	TELE
Detect (25 ppm/8 ppf)	24.9 m {81.8 ft}	138.5 m {454.3 ft}
Observe (62.5 ppm/19 ppf)	10.0 m {32.7 ft}	55.4 m {181.7 ft}
Recognize (125 ppm/38 ppf)	5.0 m {16.4 ft}	27.7 m {90.9 ft}
Identify (250 ppm/76 ppf)	2.5 m {8.2 ft}	13.8 m {45.4 ft}

WV-U25350-F3L

	WIDE
Detect (25 ppm/8 ppf)	29.5 m {96.7 ft}
Observe (62.5 ppm/19 ppf)	11.2 m {36.6 ft}
Recognize (125 ppm/38 ppf)	5.6 m {18.3 ft}
Identify (250 ppm/76 ppf)	2.8 m {9.2 ft}

5.4 Streaming performance

- Up to 14 users are accessible at the same time.
- The maximum bandwidth is 50 Mbps.

5.5 Extension software (AI application)

Information about the number and capacity of Extension software (applications) that can be installed.

WV-U25751-V3L

Number of installable applications	ROM capacity	RAM capacity
1	100 MB	100 MB

WV-U25551-V3L,WV-U25550-F3L

Number of installable applications	ROM capacity	RAM capacity
1	100 MB	50 MB

WV-U25351-V3L,WV-U25350-F3L

Number of installable applications	ROM capacity	RAM capacity
1	100 MB	100 MB

For the latest software (AI application) support status and restrictions, please check the technical information <Control No.: C0103> on our website.
→Technical information website

Software (AI apps)	Pre-install	Support status
AI-VMD	Yes*1	Supported*1
AI Privacy Guard	No	Not supported
AI Face Detection	No	Not supported
AI People Detection	No	Not supported
AI Vehicle Detection	No	Not supported
AI Non-Mask Detection	No	Not supported
AI Occupancy Detection	No	Not supported
AI Scene Change Detection	No	Not supported
AI On-site Learning	No	Not supported
AI Processing Relay	No	Not supported
Application Release License	Yes	Supported

*1 AI-VMD is built in as a main unit function.

5.6 Lamp

<WV-U25751-V3L,WV-U25551-V3L,WV-U25351-V3L>

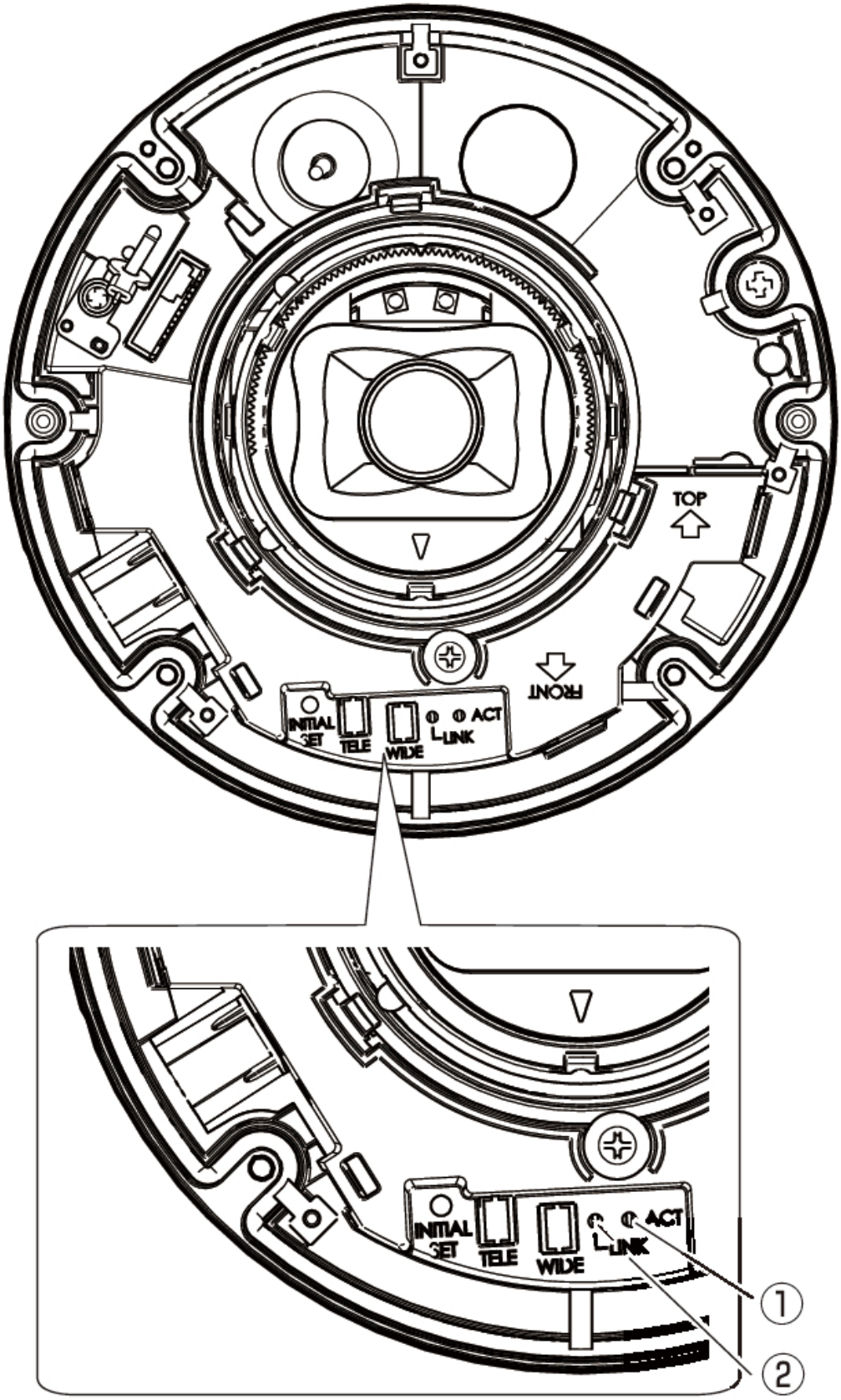
TOP
FRONT
INITIAL SET
TELE
WIDE
LINK
ACT
①
②

① [ACT] indicator

② [LINK] indicator

<WV-U25550-F3L,WV-U25350-F3L>

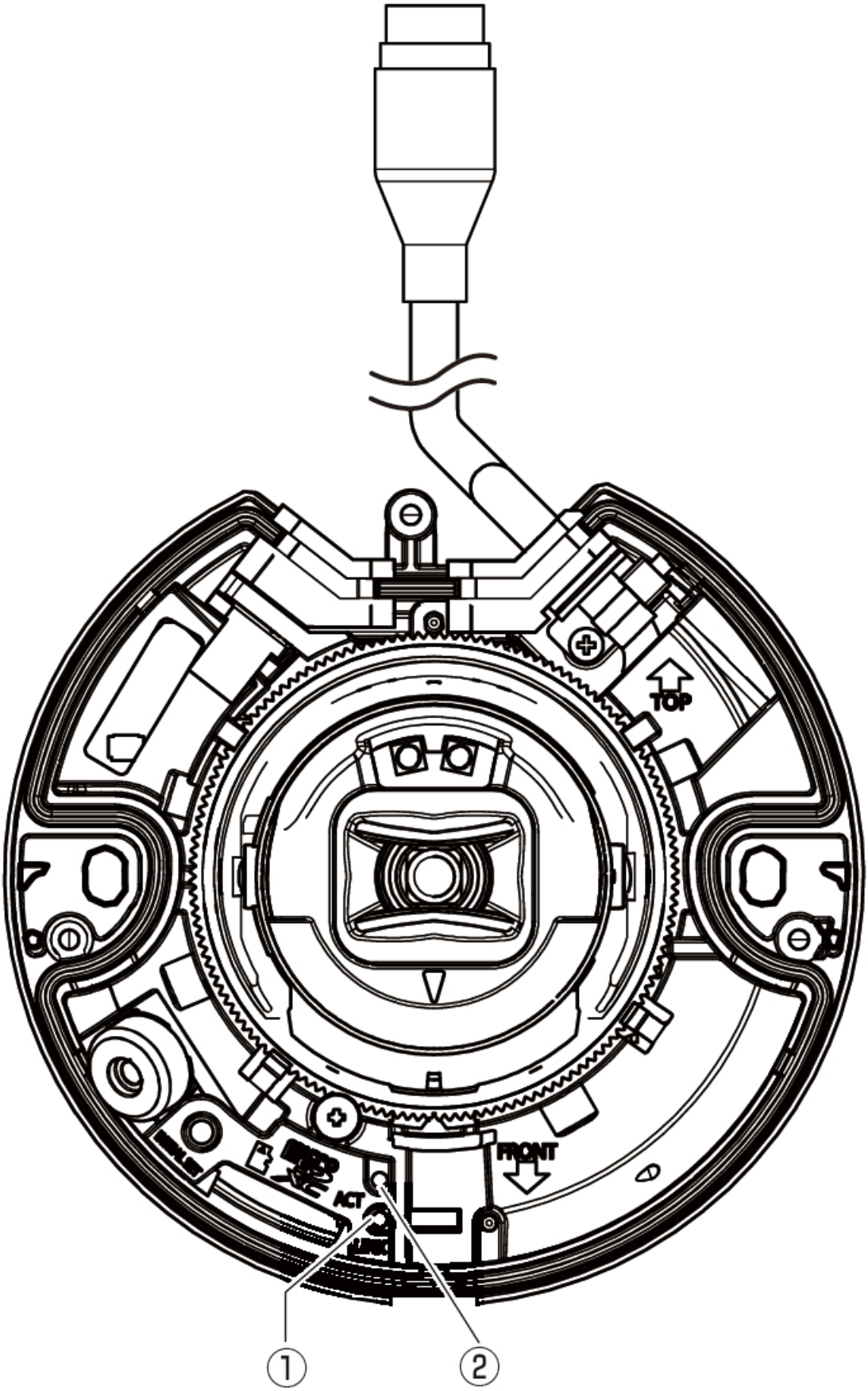
TOP
FRONT
ACT
①
②

① [LINK] indicator

② [ACT] indicator

5.6.1 Lighting the Lamp

[LINK] indicator

When the camera is able to communicate withthe connected device

- Lights orange

[ACT] indicator

When data is being sent via the network camera

- Blinks green (accessing)

5.7 Button

<WV-U25751-V3L,WV-U25551-V3L,WV-U25351-V3L>

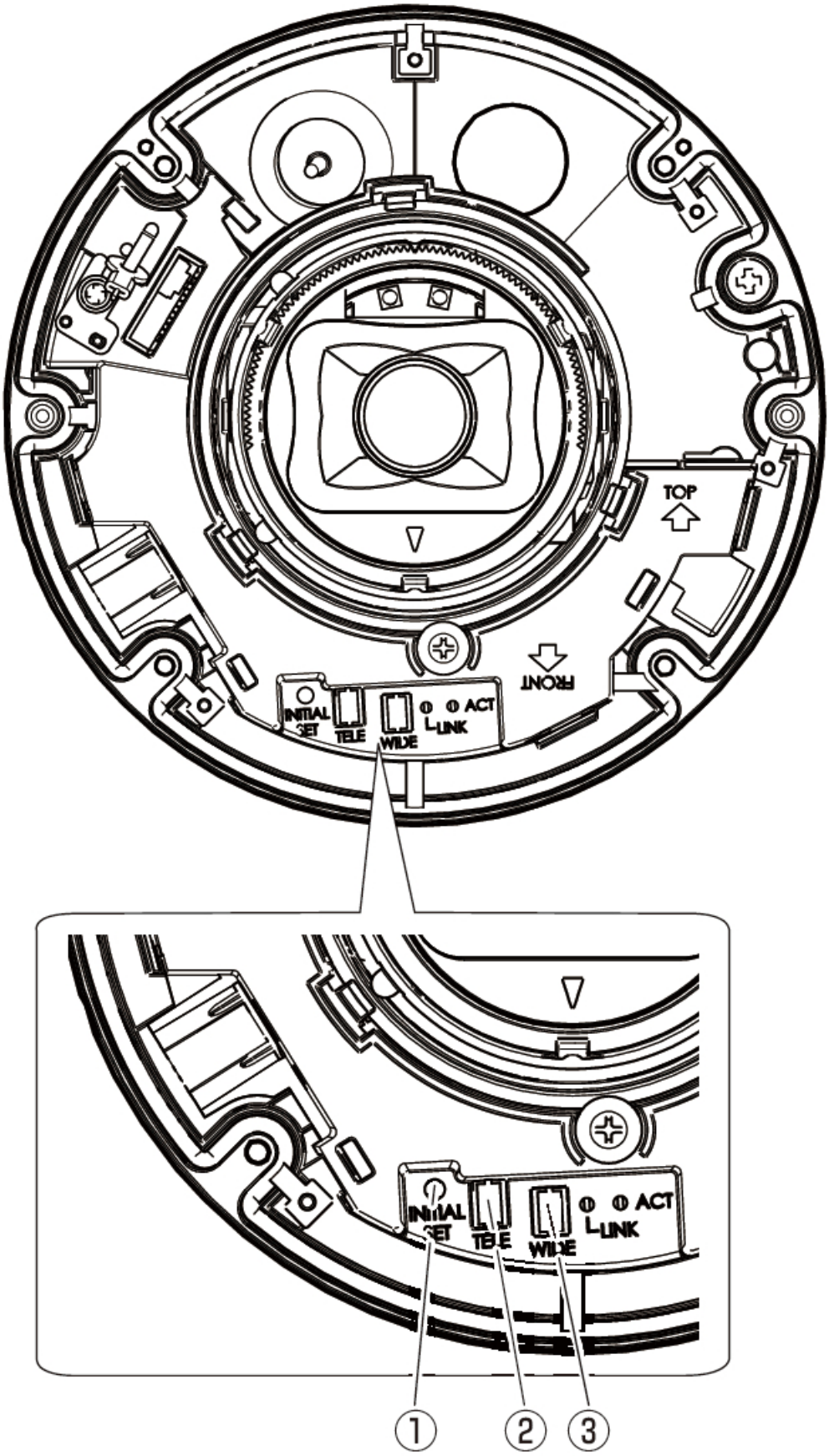
TOP
FRONT
INITIAL SET
TELE
WIDE
ACT
LINK
①
②
③

① [INITIAL SET] button

② [TELE+AF] button

③ [WIDE+AF] button

<WV-U25550-F3L,WV-U25350-F3L>

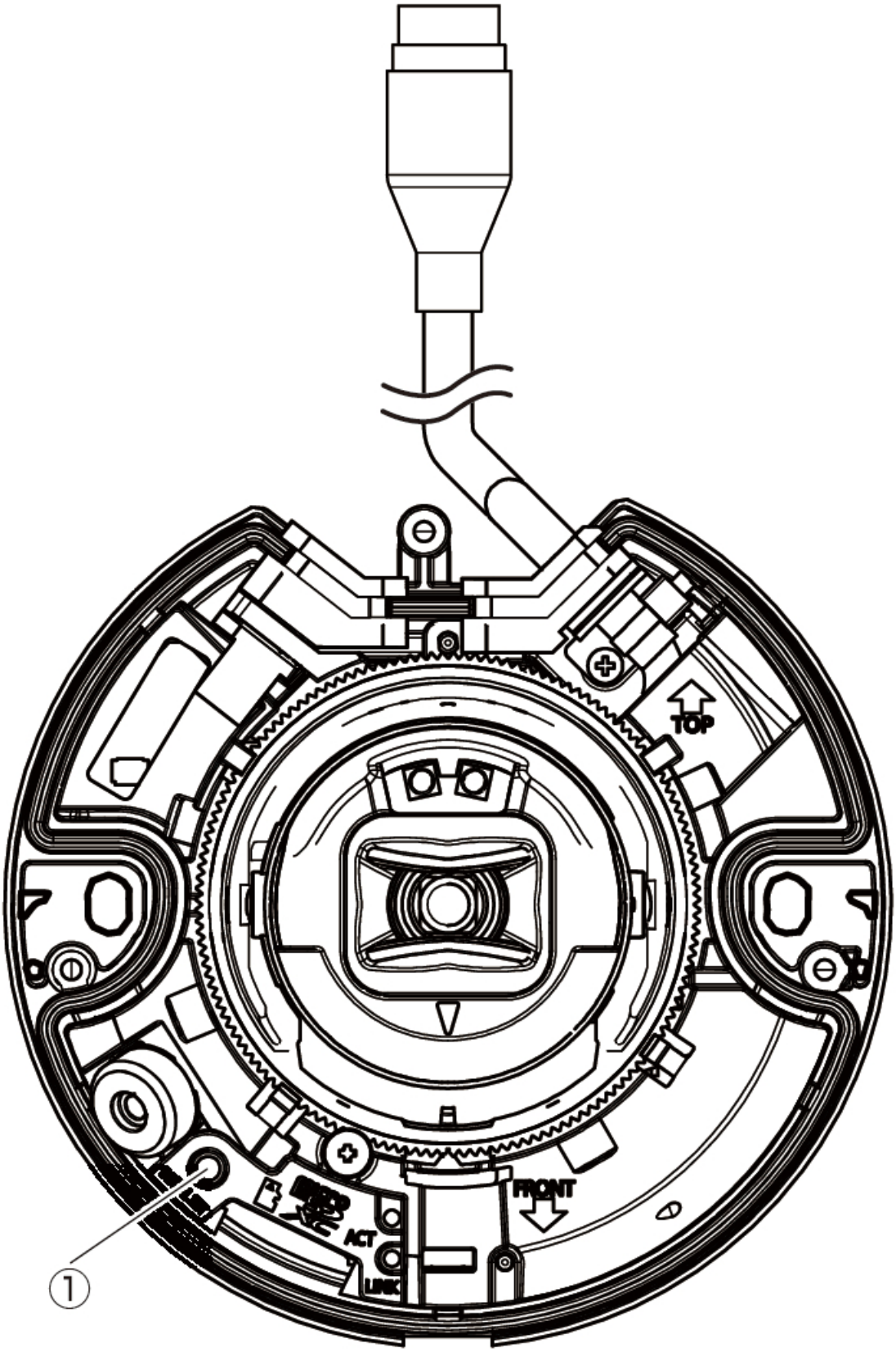

① [INITIAL SET] button

5.8 Cable

<WV-U25751-V3L,WV-U25551-V3L,WV-U25351-V3L>

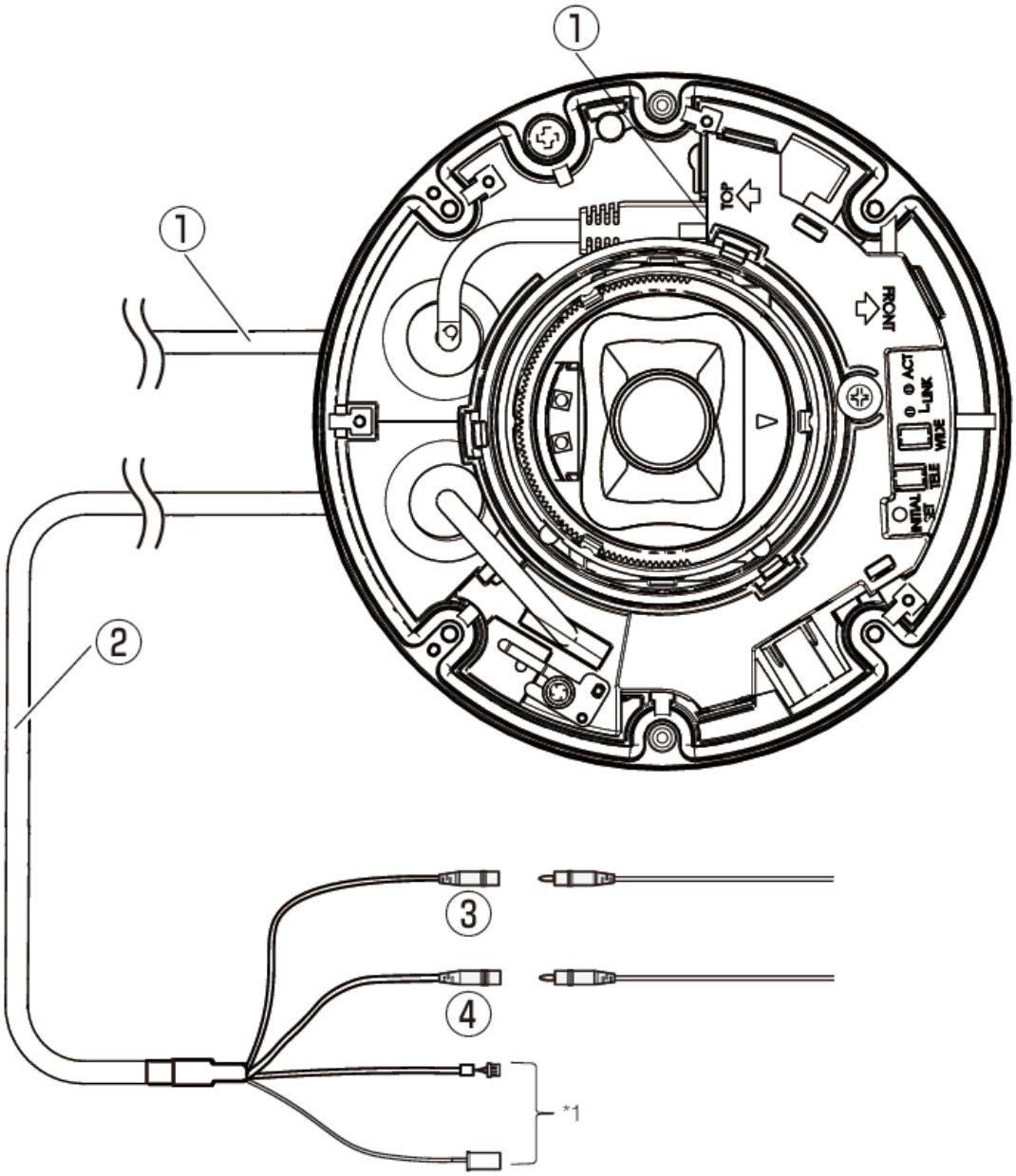

① Ethernet cable with RJ45 network cable /RJ45 plug (category 5e or higher, straight, 4 pairs (8 cores), less than 100 m)

② Multi-cable WV-QCA501A (sold separately)

③ Audio Out (Black)/Audio Out Cable

④ Audio In (white)/Audio In Cable

※1 These cables are not used.

<WV-U25550-F3L,WV-U25350-F3L>

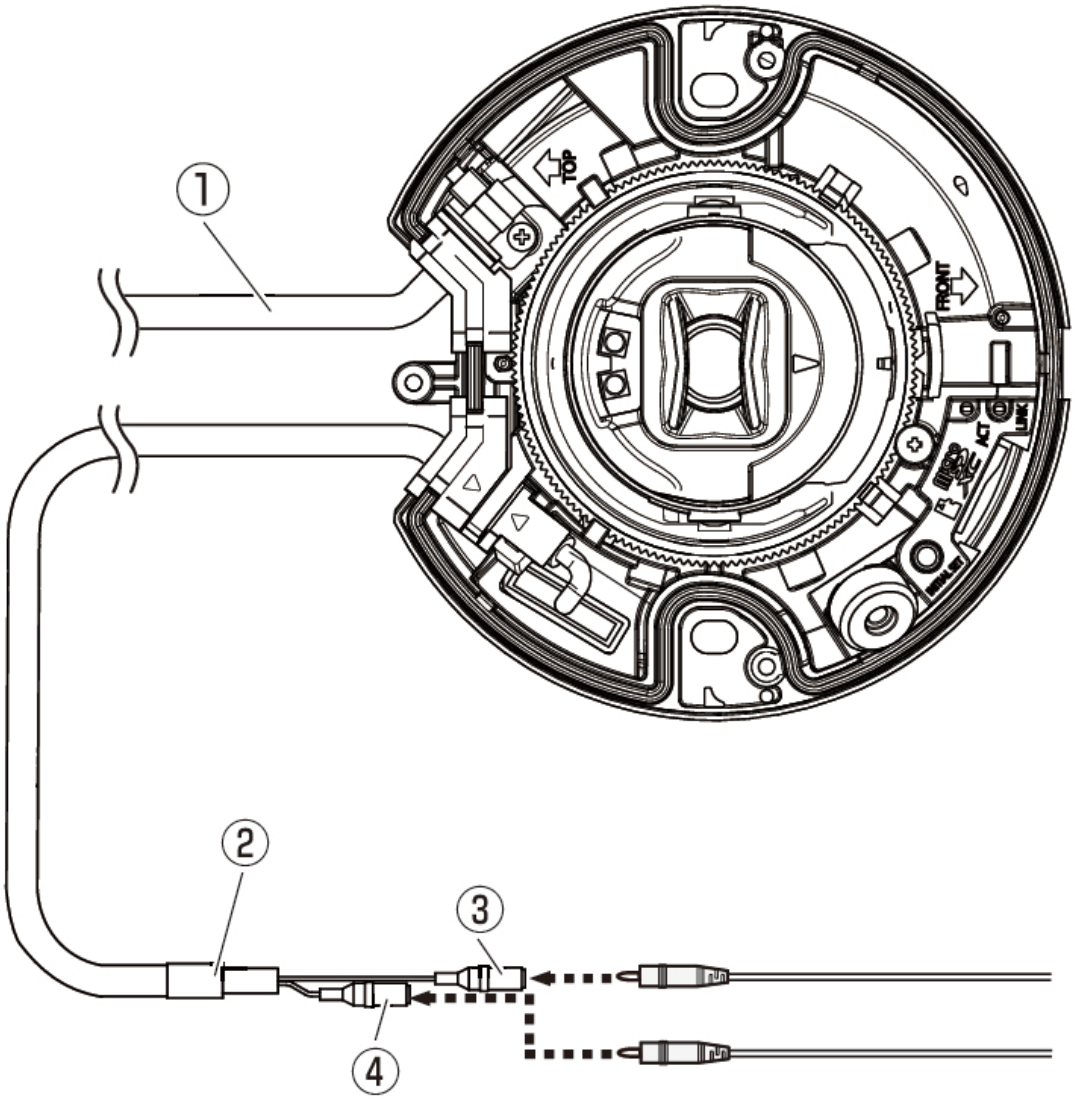

① Ethernet cable with RJ45 networking terminal /RJ45 plug (category 5e or higher, straight, 4 pairs (8 cores), less than 100 m)

② Audio cable WV-QCA504 (sold separately)

③ Audio In (white)/Audio In Cable

④ Audio Out (Black)/Audio Out Cable

6. Other

6.1 Initialize

INITIAL SETPress the button to initialize the unit.INITIAL SETFor the location of the buttons, refer to the following:

→Button

1. Turn off the power of this product.
2. Turn on the power of this product while pressing the [INITIAL SET] button.
3. Press the [INITIAL SET] button for 15 seconds or longer after the power is turned on.
4. Release the INITIAL SET button
   - Approximately two minutes later, this product is started and the settings containing the network settings are initialized. If it does not start normally, try again.

6.2 Check the software version

The functions of this product are implemented in software. We recommend that you first check the current software version if there is a problem with the operation of this product.

➢ Live image pages configuration panels>[Detailed setting]>[Camera detailed setting]> [Maintenance] of the Advanced menus on the left>Clicking on the [Upgrade] tabs displays the versioning window.

1. Check software versions with [Firmware version]
   - The current software version can be checked.

Up-to-date versions of software may contain modifications to specific problems.

6.3 Upgrade software

➢ Live image pages configuration panels>[Detailed setting]>[Camera detailed setting]> [Maintenance] of the Advanced menus on the left>When the [Upgrade] tabs are clicked, the software-upgradeable window is displayed.

1. Download the latest software to the PC
2. Click Select Files to specify the software you downloaded, and then click [Execute].

- Use a PC on the same subnet as this product to upgrade the version.
- Do not turn off the power of this product during version upgrading. Do not perform any operation until the version upgrade is completed.
- Be sure to check the version after upgrading. Also, delete the temporary Internet file.

6.4 Order of setting when adjusting image quality

It is recommended to set the settings for image quality in the following order: Adjustment of visibility → Adjustment of color → Removal of noise.

1. Adjust the visibility
   - [Light control mode], [Intelligent auto], [Super Dynamic], [Contrast level], [High light compensation(HLC)], [Adaptive black stretch], [Adaptive highlight stretch], [Maximum gain], [Maximum shutter], [Pedestal level]
2. Adjust the color
   - [White balance], [Chroma gain level]
3. Remove the noise
   - [Digital noise reduction], [Sharpness level]

Refer to the User Manual for details of each function.

- The image quality adjustment function may affect each other.
- If necessary, adjust the brightness level of the screen.

6.5 Adjusting object brightness (bright scenes)

6.5.1 Adjusting brightness

Adjust the object brightness.

➢ Live image pages configuration panels>Clicking the [Image quality] tabs enables you to set the image quality.

1. Adjust the [Brightness] of [Image quality]
   - Moving in the [+] direction brightens the image.
   - Move in the [−] direction to darken the image.

[−]
Produce darker images

[+]
Create the brighter the photos

6.6 Adjusting object brightness (dark scenes)

6.6.1 Adjust the maximum gain

In dark scenes, the image becomes brighter by increasing the maximum gain.

➢ Live image pages configuration panels>Clicking the [Image quality] tabs enables you to set the image quality.

1. Adjust the [Maximum gain] to [+]

Maximum gain: 6 Maximum gain: 11

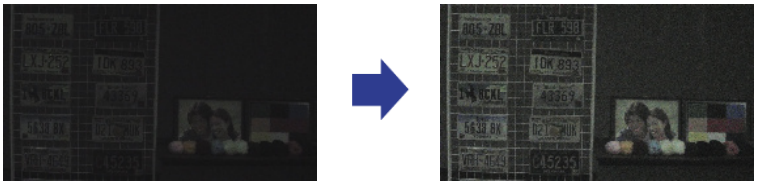

Increasing the maximum gain increases noise.

6.6.2 Adjust the maximum shutter

Increasing the maximum shutter makes the images brighter.

➢ Live image pages configuration panels>Clicking the [Image quality] tabs enables you to set the image quality.

1. Select [Maximum shutter]
   - Selecting [Maximum shutter] longer than [Max 1/30s] brightens the image because the amount of light entered increases.

Increasing the maximum shutter increases the blur.

Maximum shutter : 1/30

Maximum shutter : 4/30

6.7 Reducing white flickering and blacking on the screen

6.7.1 Set Super Dynamic

When Super Dynamic is set to ON, both bright and dark areas are reproduced faithfully, even when shooting in a place with a large brightness difference.

➢ Live image pages configuration panels>Clicking the [Image quality] tabs enables you to set the image quality.

1. Set [Super Dynamic] to [On]

Set [Super Dynamic] to [Off] when the following phenomena are observed depending on the lighting condition.
-If flicker or color change occurs
-Noise in the bright area on the screen

Super Dynamic: Off

Super Dynamic: On

6.7.2 Set the backlight compensation

By setting [Backlight Corrector], the darkness of the indoor object is suppressed (brighter indoor object).

➢ Live image pages configuration panels>[Detail setting]>[Camera detailed setting]>[Image] or [Image/Audio] of the Advanced menus on the left>[Image adjust] in the [Image quality] tabs> When [Advanced settings] is clicked, the image quality adjustment setting window is displayed.

1. Set to [Back light compensation(BLC)] in the [Super Dynamic] [BLC/ HLC]

If [Super Dynamic] is set to [On] or [Intelligent Auto] is set to [On], [Backlight Compensation] cannot be set.

Back Light Correction: Off

Back light correction: On
Level: 16

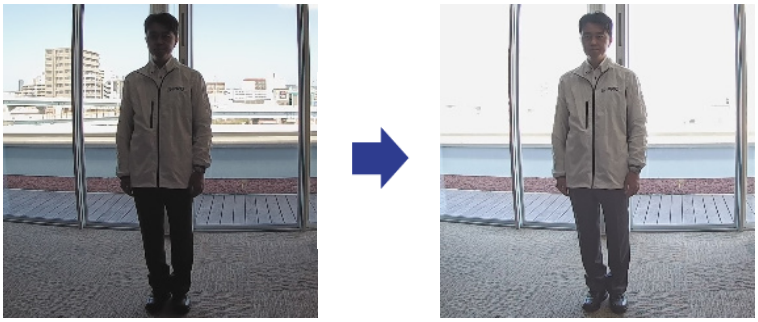

6.7.3 Set the high light compensation

By setting [High light compensation(HLC)], bright lights such as car headlights suppress the brightness of the object.

➢ Live image pages configuration panels>[Detailed setting]>[Camera detailed setting]>[Image] or [Image/Audio] of the Advanced menus on the left>[Image adjust] in the [Image quality] tabs>When [Setup] is clicked, the image quality adjustment setting window is displayed.

1. Select [High light compensation(HLC)] in [Super Dynamic] [BLC/ HLC]

If [Super Dynamic] is set to [On] or [Intelligent Auto] is set to [On], it cannot be set to [High light compensation(HLC)].

High light compensation : Off

High light compensation : On

6.7.4 Adjust the adaptive black stretch

Adjust the [Adaptive black stretch] to brighten the dark areas of the images.

➢ Live image pages configuration panels>[Detail setting]>[Camera detailed setting]>[Image] or [Image/Audio] of the Advanced menus on the left>[Image adjust] in the [Image quality] tabs> When [Advanced settings] is clicked, the image quality adjustment setting window is displayed.

1. Adjust [Detail setting] [Adaptive black stretch] levels to [+]

Level: 128

Level: 255

6.7.5 Adjust the [Pedestal level]

Adjust the [Pedestal level] to adjust the black level of the image.

➢ Live image pages configuration panels>[Detailed setting]>[Camera detailed setting]>[Image] or [Image/Audio] of the Advanced menus on the left>[Image adjust] in the [Image quality] tabs>When [Setup] is clicked, the image quality adjustment setting window is displayed.

1. Adjust the pedestal level of the [Detailed setting].
   - Moving in the [+] direction brightens the image.
   - Move in the [−] direction to darken the image.

[+] direction

Brighten the image

[−] direction

Darken the image

6.8 Adjust the object contrast

6.8.1 Adjust the contrast

By adjusting the [Contrast level] to increase the contrast between the light and dark images, visibility of the object with less contrast can be improved.

➢ Live image pages configuration panels>[Detailed setting]>[Camera detailed setting]>[Image] or [Image/Audio] of the Advanced menus on the left>[Image adjust] in the [Image quality]

tabs>When [Setup] is clicked, the image quality adjustment setting window is displayed.

1. Adjust [Detailed setting] [Contrast level] levels to [+]

Level: 128

[+] direction

Increase the contrast

6.9 Reduce flicker

Flickers are automatically corrected by using [Light control mode].

➢ Live image pages configuration panels>Clicking the [Image quality] tabs enables you to set the image quality.

1. Select [Indoor scene (50 Hz)] or [Indoor scene (60 Hz)] for [Light control mode].
   - Use 50 Hz/60 Hz depending on the region.

6.10 Reducing the blur of object (bright scenes)

6.10.1 Set intelligent auto (motion priority level)

Using [Intelligent Auto], the camera identifies object with scenes (backlights, outdoors, night scenes, etc.) and facial movements of people. The camera automatically adjusts the amount, gain, shutter speed, and contrast of light entering the camera from the camera's lenses to make it easier to see a moving object.

➢ Live image pages configuration panels>[Detail setting]>[Camera detailed setting]>[Image] or [Image/Audio] of the Advanced menus on the left>[Image adjust] in the [Image quality] tabs> When [Advanced settings] is clicked, the image quality adjustment setting window is displayed.

1. Adjust [Face priority level (Brightness)] and [Motion priority level (Shutter)] with [Intelligent Auto] set to [On].
   - By adjusting in the [+] direction, blurring of the object will be reduced.

Increasing the level in a low illumination environment increases noise.

Off (person blurred)

On (less blurring)

6.10.2 Adjust the maximum shutter

Shortening the maximum shutter reduces blur.

➢ Live image pages configuration panels>Clicking the [Image quality] tabs enables you to set the image quality.

1. Selecting a shorter [Maximum shutter] than [Max. 1/30s]
   - If [Maximum shutter] is set to a shorter time than [Max. 1/30s], blur is reduced.

In low illumination environments, shortening the maximum shutter will darken the object and increase the noise.

Maximum shutter : 1/30

Maximum shutter : 1/250

6.11 Reducing object blur (dark scenes)

6.11.1 Adjust digital noise reduction

Reducing the effects of noise reduction by adjusting the [Digital noise reduction] reduces the blur.

➢ Live image pages configuration panels>Clicking the [Image quality] tabs enables you to set the image quality.

1. Adjust the [Digital noise reduction] in the [−] direction.

If the effect of noise reduction is reduced, the noise will increase.

Level: 128

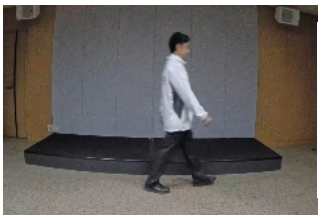

Level: 100

Reduce the blur

6.12 Sharpen the outline of the subject

6.12.1 Adjust the sharpness level

Adjust the [Sharpness level] to sharpen the outline of the images.

➢ Live image pages configuration panels>Clicking the [Image quality] tabs enables you to set the image quality.

1. Adjust the [Sharpness level] to [+]

Level: 10

Level: 31

Sharpen the outline of the image

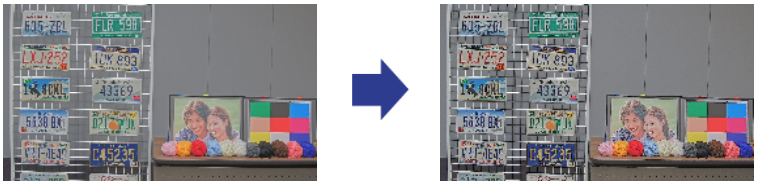

6.13 Adjust the color

6.13.1 Adjust color density

Adjust the [Chroma gain level] to adjust the darkness.

➢ Live image pages configuration panels>[Detailed setting]>[Camera detailed setting]>[Image] or [Image/Audio] of the Advanced menus on the left>[Image adjust] in the [Image quality] tabs>When [Setup] is clicked, the image quality adjustment setting window is displayed.

1. Adjust [Chroma gain level] in [Basic Adjustment] or [Detailed setting]
   - If you move the slider in the "+" direction, the colors will become loud and vivid.
   - If you move the slider in the "−" direction, the colors will become subdued.

[−] [+]

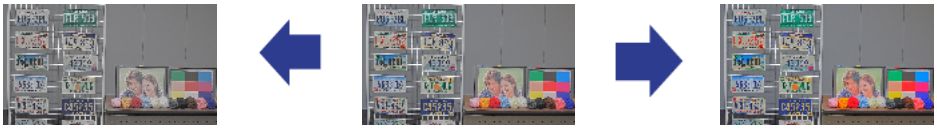

6.13.2 Adjust the white balance

If the color is affected by a sodium lamp, use [White balance] to adjust the color.

➢ Live image pages configuration panels>[Detailed setting]>[Camera detailed setting]>[Image] or [Image/Audio] of the Advanced menus on the left>[Image adjust] in the [Image quality] tabs>When [Setup] is clicked, the image quality adjustment setting window is displayed.

1. Select [ATW2] in [White balance]
   - The camera automatically adjusts the white balance under a sodium lamp.

Effect of sodium lamp No effect of sodium lamp

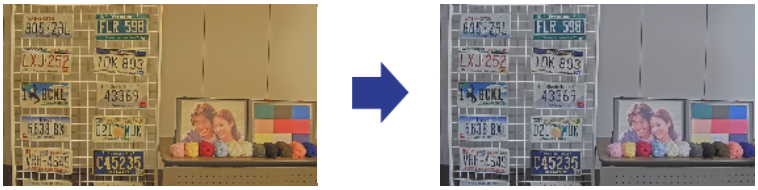

6.14 Reducing object noise (bright scenes)

6.14.1 Adjust the sharpness level

Adjusting the [Sharpness level] to make the images soft reduces the noise around the object.

➢ Live image pages configuration panels>Clicking the [Image quality] tabs enables you to set the image quality.

1. Adjust the [Sharpness level] in the [−] direction.

Level: 31

Level: 5

Soften the outline of the image

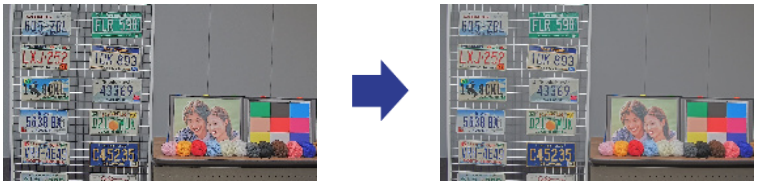

6.15 Reducing object noise (dark scenes)

6.15.1 Adjust digital noise reduction

By adjusting the [Digital noise reduction] and increasing the effects of noise reduction, noise is reduced.

➢ Live image pages configuration panels>Clicking the [Image quality] tabs enables you to set the image quality.

1. Adjust the [Digital noise reduction] to [+]

Increasing the effects of noise reduction increases blur.

Level: 90

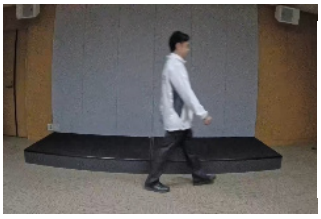

Level: 255

Reduce noise

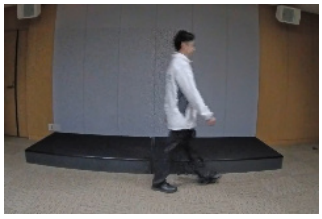

6.16 Set focus when switching between black and white.

6.16.1 Focus adjustment method for switching between black and white

If spots such as street lights or flat object are reflected in low-illumination conditions, the focus may not match when switching between black and white. If this is the case, adjust the focus as shown below.

➢ Live image pages configuration panels>[Detail setting]>[Camera detailed setting]>[Image/Audio] of the Advanced menus on the left>[Zoom/focus adjustment] in the [Image quality] tabs>To Advanced Settings>>Click [Zoom/Focus Adjustment] to open the Zoom/Focus Setting window.

1. Change [Focusing at Day & Night switching] to [Preset]
2. Run [Manual focus adjustment] or [Auto focus] in color
   - The focus position is stored in the color mode during daytime shooting.
3. Run [Manual focus adjustment] or [Auto focus] in black and white
   - The focus position is stored in black and white during night shooting.

   ➢ Live image pages configuration panels>[Detail setting]>[Camera detailed setting]>[Image/Audio] of the Advanced menus on the left>[Image adjust] in the [Image quality] tabs>To Advanced Settings>>Click [Image Quality Adjustment] to display the image quality adjustment setting screen.
4. Set [Day & Night(IR)] to [Auto1(IR Light Off)], [Auto2(IR Light On)], or [Auto3(SCC)]

depending on the application.

To be black-and-white during the daytime, set [Day & Night(IR)] to [On(IR Light On)] and force it to black-and-white.

Zoom/focus adjustment

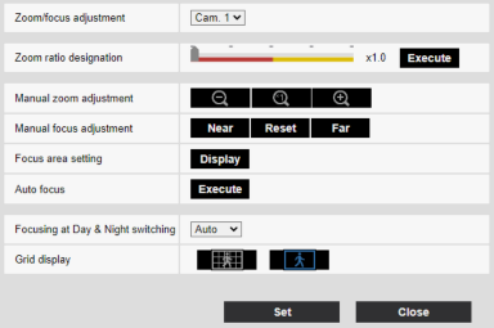

Image quality adjustment

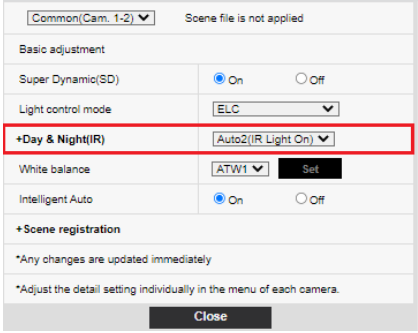

6.17 Troubleshooting

Check the symptoms on this table before asking for repair.

Contact the dealer from whom you purchased the watch if you do not recover from any of these problems or if you have symptoms other than those listed in this table.

Phenomenon	Cause	Countermeasure	See Also
Power does not turn on	For PoE power ・Complies with the PoE(IEEE802.3af: Is the Ethernet cable of this machine connected to a compatible power supply device?	・Please check if it is connected.	Installation section

Phenomenon	Cause	Countermeasure	See Also
	・Depending on the power supply device to which more than one PoE terminal device can be connected, power is not supplied when the total power limit that can be supplied is exceeded.	・Read the operating instructions for the PoE power supply.	
The LINK indicator does not light amber when the network cable is connected.	・Is the Ethernet cableconnected to the machine correctly? ・Is the hub or router to which this unit is connected operating properly? ・Is the Ethernet cable connected to the machine broken?	・Connect the Ethernet cable correctly. ・Make sure that the hub or router you are using is operating properly. ・Replace the Ethernet with another one.	—

Phenomenon	Cause	Countermeasure	See Also
Noise occurs in the audio input.	The following are possible: ・Camera, switching hub, and peripherals are not grounded ・Power lines etc. are wired nearby ・There are devices that generate strong electric or magnetic fields (such as TV and radio transmitting antennas, air conditioner motors, and power transformers) nearby.	If the improvement cannot be improved by reviewing the peripheral devices, use a microphone with amplifier or connect an audio output with low output impedance.	Installation section
The auto focus (AF) does not match.	Automatic focus adjustment may not be possible in the following situations or when shooting a subject.	Manually adjust the focus from the software screen.	—

Phenomenon	Cause	Countermeasure	See Also
	・There is a large movement. ・Large change in illuminance ・Low illumination ・Be extremely bright or reflective ・Over the window ・Where the dome cover is easily dirty ・Less bright or dark, such as white walls ・The flicker is severe.		

6.18 Precautions pertaining to usage

- **Impact on image/image quality**

  Image quality may deteriorate or the image may be difficult to see under the installation conditions below.

  - When raindrops adhere to the Dome covers during rainfall
  - When snow adheres to the Dome covers due to wind during snow accumulation (the degree of snow adherence depends on the amount of snow fall and the snow quality)
  - Contamination of the Dome covers due to airborne dust or automotive exhaust
- **Do not apply strong shocks to the Dome covers.**

  Otherwise damage or flooding can result.
- **Do not touch lenses or Dome covers directly.**

  If dirty, image quality may deteriorate.
- **Replacing the dome cover**

  If scratches or stains remain after cleaning, this may be caused by environmental factors and image quality could be affected. Please replace the dome cover.
- **Ventilation opening**
  - This product has a ventilation opening to keep the inside of the camera low humidity.
  - Condensation may occur under certain conditions, such as temperature, humidity, and

weather, and dehumidification may take longer.

- The ventilation opening is at the bottom of the camera. To maintain the dehumidification function normally, do not caulk the gap between the camera body and the ceiling (fill the gap with joint material, etc.).

・ Using in low temperature environments

This product is equipped with an internal heater unit for use in cold climates.

The heater unit turns on automatically when the temperature inside the product drops below around -15 ° C {5 ° F}.

When this product is installed and operated in low temperatures below -20 ° C {-4 ° F}, it may require time to start up since the camera will wait to be warmed up internally by the internal heater right after the power is turned on.

Also, the camera may not function properly, if it is installed and operated in an environment where the temperature is below -25 ° C{-13 ° F}. In such a case, wait approximately 2 hours or more until the camera is warmed up. Then, turn on the power again.

As the camera warms up, snow or frost accumulated on the dome cover will melt. However, it may not be defrosted from the cover depending on the ambient temperature or weather condition.

・ Using the Product in a Low Temperature Environment

If the product is installed or started in an environment where the internal temperature is-25° C or less, it may not be able to be used normally. If this happens, wait for the unit to warm up (for at least two hours) and then turn the power on again.

The warming of this unit will thaw snow and frost on the dome cover, but thawing may not be possible depending on the ambient temperature and the extent of wind and snow.

・ When "WARMING UP-PLEASE WAIT" is displayed on the screen during use

The inside temperature of this product is low. Wait for the interior to warm up before this product restarts automatically. Please wait for a while.

・ Batteries

The battery is built into this product. Do not leave the battery in an environment exposed to excessive heat from sunlight or fire.

・ If this product is no longer in use, do not leave it unattended and must be removed.

・ We shall not be liable for content compensation, losses of recorded or edited content and any direct or indirect consequent damages caused by failure to record or edit due to faults with this unit or the microSD memory card.

In addition, the same provisions apply after unit is reparied.

・ Open Source Software

- This product contains open source software licensed under GPL (GNU General Public

License), LGPL (GNU Lesser General Public License), etc.

- Customers can duplicate, distribute and modify the source code of the software under license of GPL and/or LGPL.
- For details concerning licensing and source code of open source software, click "Click here for OSS information" on "Support" page of the setup menu of this product and read the displayed content.
- Please note that we shall not respond to any inquiries regarding the contents of the source code.

・ Copyright

Except for open source software licensed under GPL/LGPL and so on, distributing, copying, disassembling, reverse compiling and reverse engineering of the software provided with this product are all expressly prohibited. In addition, exporting any software provided with this product violating export laws is prohibited.

6.19 Disclaimer

IN NO EVENT SHALL i-PRO Co., Ltd. BE LIABLE TO ANY PARTY OR ANY PERSON, EXCEPT FOR REPLACEMENT OR REASONABLE MAINTENANCE OF THE PRODUCT, FOR THE CASES,INCLUDING BUT NOT LIMITED TO BELOW:

1. ANY LOSS OR DAMAGE, INCLUDING WITHOUT LIMITATION, DIRECT OR INDIRECT, SPECIAL, CONSEQUENTIAL OR EXEMPLARY, ARISING OUT OF OR RELATING TO THE PRODUCT;
2. ANY INCONVENIENCE, LOSS, OR DAMAGE CAUSED BY INAPPROPRIATE USE OR NEGLIGENT OPERATION OF THE USER;
3. ALL MALFUNCTIONS OR TROUBLES FROM UNAUTHORIZED DISASSEMBLE, REPAIR OR MODIFICATION OF THE PRODUCT BY THE USER, REGARDLESS OF THE CAUSE OF THE MALFUNCTION OR TROUBLE;
4. INCONVENIENCE OR ANY LOSS ARISING WHEN IMAGES ARE NOT DISPLAYED, DUE TO ANY REASON OR CAUSE INCLUDING ANY FAILURE OR PROBLEM OF THE PRODUCT;
5. ANY PROBLEM, CONSEQUENTIAL INCONVENIENCE, OR LOSS OR DAMAGE, ARISING OUT OF THE SYSTEM COMBINED BY THE DEVICES OF THIRD PARTY;
6. ANY CLAIM OR ACTION FOR DAMAGES BROUGHT BY ANY PERSON OR ORGANIZATION AS A PHOTOGRAPHED SUBJECT DUE TO VIOLATION OF PRIVACY CONCERNING A SURVEILLANCE CAMERA'S PICTURE OR SAVED DATA,

FOR SOME REASON (INCLUDING USE WHEN USER AUTHENTICATION ON THE AUTHENTICATION SETTING SCREEN IS SET TO OFF)、 BECOMING PUBLIC OR BEING USED FOR ANY PURPOSE;

7. LOSS OF REGISTERED DATA CAUSED BY ANY FAILURE (INCLUDING INITIALIZATION OF THE PRODUCT DUE TO FORGOTTEN AUTHENTICATION INFORMATION SUCH AS A USER NAME AND PASSWORD);

Limitation of liability

THIS PUBLICATION IS PROVIDED "AS IS" WITHOUT WARRANTY OF ANY KIND, EITHER EXPRESS OR IMPLIED, INCLUDING BUT NOT LIMITED TO, THE IMPLIED WARRANTIES OF MERCHANTABILITY, FITNESS FOR ANY PARTICULAR PURPOSE, OR NON-INFRINGEMENT OF THE THIRD PARTY'S RIGHT.
THIS PUBLICATION COULD INCLUDE TECHNICAL INACCURACIES OR TYPOGRAPHICAL ERRORS. CHANGES ARE ADDED TO THE INFORMATION HEREIN, AT ANY TIME, FOR THE IMPROVEMENTS OF THIS PUBLICATION AND/OR THE CORRESPONDING PRODUCT (S).

6.20 For trademarks and registered trademarks

- For trademarks and registered trademarks
  - Microsoft, Microsoft Edge, and Windows are trademarks of the Microsoft group of companies.
  - Intel and Intel Core are trademarks of Intel Corporation or its subsidiaries.
  - Adobe, Acrobat, and Reader are either registered trademarks or trademarks of Adobe in the United States and/or other countries.
  - Google Chrome is a trademark of Google LLC.
  - Firefox is a trademark of the Mozilla Foundation in the US and other countries.
  - Other company names and product names described in this manual are trademarks or registered trademarks of each company.

6.21 NETWORK RELATIONSHIP

Since this product is connected to the network, it may be damaged as follows.

① Leakage or leakage of information via this product

② Malicious operation of this product by a malicious third party

③ Interference or stoppage of this product by a malicious third party

In order to prevent such damage, take adequate network security measures including the following measures under the responsibility of the customer.

- Use this product on a secure network using firewalls, etc.
- Confirm that computer viruses and malicious programs are regularly checked and exterminated when the computer is connected to the system.
- Use user authentication, set user names and passwords, and restrict users who can log in to protect against unauthorized attacks.
- To prevent image data, authentication information (user name, password), alarm mail information, FTP server information, DDNS server information, etc., from being leaked on the network, measures such as restricting access by user authentication are implemented.
- All browsers must be closed after administrator access to this product.
- The password of the administrator is changed periodically. In addition, authentication information (user name, password) shall be appropriately stored so that it is not visible to third parties.
- Do not install this product or cables in a place where they are easily destroyed.