# Wall/Ceiling Mount Bracket User's Manual

## Usage Cautions and Warnings

Thank you for purchasing our product. Please read through the User Manual prior to use.

- Please read through the stafety-related contents and usage instructions before use.
- Abide strictly by the warnings and usage instructions that require user caution, and always follow the operation methods and instructions.
- Installation must be performed by a trained specialist.
- The mounting has to be installed onto a firm and stable location where all the parts may be completely secured.
  The installation needs to be performed by a trained and experienced professional.
- Do not use the product for other purposes.

## Product Characteristics

This product has been designed to be used in the installation of vandal dome cameras.
The product is strong and corrosion-free since it is fabricated using aluminum alloy material.
Various installation environments are supported for dynamic use.

## Prior To Use

Avoid installing the mounting onto an unstable structure such as a gypsum wall panel.
Install the mounting onto a strong structure such as a concrete wall, steel beam, etc.
Use concrete screws with plugs or other installation tools when installing the mounting onto a concrete structure, Make sure that all the screw parts are metallic.
(Avoid screwing too close to the edge of a piece of wood when screwing into a wooden structure)

## 02CL | Installation Method

① Attached the mount on to the wall and insert the cable into the mount and pipe.

② After assemble the pipe onto the mount, wrap the teflon tape on the gap.

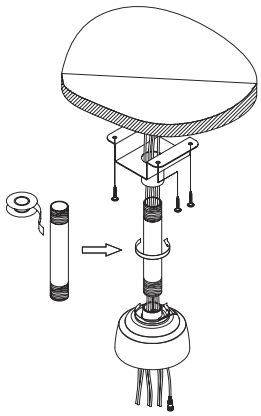

③ Assemble the adaptor flange with the camera adaptor and insert the cale into the camera adaptor.

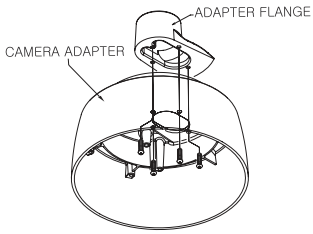


**[Hole position of Camera Adaptor]**

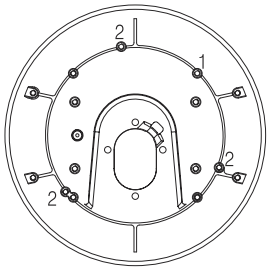

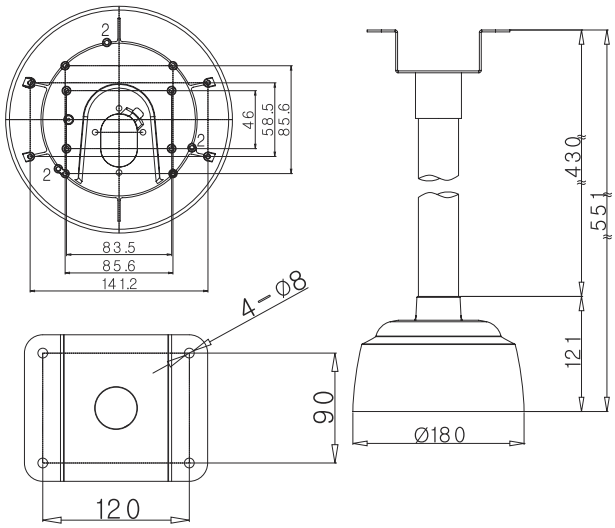
## 02CL | Dimensions