Lowell™
Distributed Audio, Power & Rack Solutions

Rack Side Panels #SDV Series

steel side panels with vents for slim frame racks
sold in pairs

Models #SDV-3026, #SDV-3826 and #SDV-4426 feature two handles.

100% CERTIFIED US STEEL

MADE IN THE U.S.A

features

- **Description:** Removable side panels are an optional accessory designed for Lowell slim frame racks (LXR Series, LVR Series).
- **Construction:** 18-gauge certified U.S. steel
- **Finish:** Black wrinkle powder epoxy finish
- **Panel Width:** 22.00 in. or 27.25 in.
- **Panel Depth:** 0.625 in. (Increases overall rack width 1.25")
- **Ventilation:** Top and bottom vents
- **Handle:** Integral handles (1 or 2, depending on size)
- **Origin:** Made in the U.S.A.

a&e specifications

The rack shall include a pair of removable side panels, Lowell model _____, which shall be 18-gauge certified U.S. steel with black wrinkle powder epoxy finish. The panels shall increase overall rack width 1.25 in. They shall feature top/bottom vents and integral handles.

DISCONTINUED SPEC SHEET

SDV Series summary

Model No.	*Description*	*For Rack Height*	*For Rack Depth*	*For Rack Width*	*Material*	*Panel Width*	*Integral Handles*	*Quantity*
SDV-821	Removable side panels w/vents	8 U	21 in.	19 in.	18-gauge steel	22.00 in.	1	1 pr
SDV-1421	Removable side panels w/vents	14 U	21 in.	19 in.	18-gauge steel	22.00 in.	1	1 pr
SDV-2221	Removable side panels w/vents	22 U	21 in.	19 in.	18-gauge steel	22.00 in.	1	1 pr
SDV-3021	Removable side panels w/vents	30 U	21 in.	19 in.	18-gauge steel	22.00 in.	1	1 pr
SDV-3821	Removable side panels w/vents	38 U	21 in.	19 in.	18-gauge steel	22.00 in.	1	1 pr
SDV-4421	Removable side panels w/vents	44 U	21 in.	19 in.	18-gauge steel	22.00 in.	1	1 pr
SDV-826	Removable side panels w/vents	8 U	26 in.	19 in.	18-gauge steel	27.25 in.	1	1 pr
SDV-1426	Removable side panels w/vents	14 U	26 in.	19 in.	18-gauge steel	27.25 in.	1	1 pr
SDV-2226	Removable side panels w/vents	22 U	26 in.	19 in.	18-gauge steel	27.25 in.	1	1 pr
SDV-3026	Removable side panels w/vents	30 U	26 in.	19 in.	18-gauge steel	27.25 in.	2	1 pr
SDV-3826	Removable side panels w/vents	38 U	26 in.	19 in.	18-gauge steel	27.25 in.	2	1 pr
SDV-4426	Removable side panels w/vents	44 U	26 in.	19 in.	18-gauge steel	27.25 in.	2	1 pr

Dimensions show inches and [mm]
1U = 1.75"

Lowell strives to provide accurate information while reserving the right to change specifications and/or improve manufacturing methods without prior notification.
©2019 Lowell Manufacturing Co., 100 Integram Dr., Pacific MO 63069 / tel. 800.325.9660 / www.lowellmfg.com

SAMPLE PANEL FOR 21"D RACKS

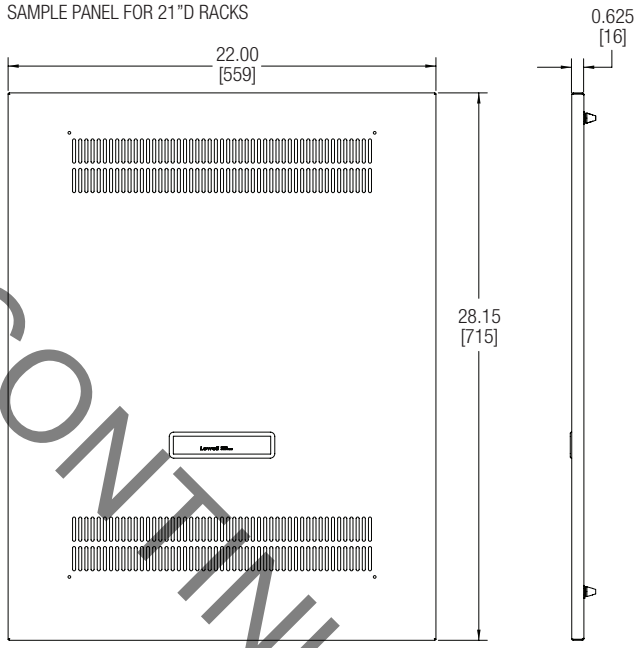

SAMPLE PANEL FOR 26"D RACKS Note: some have 2 handles

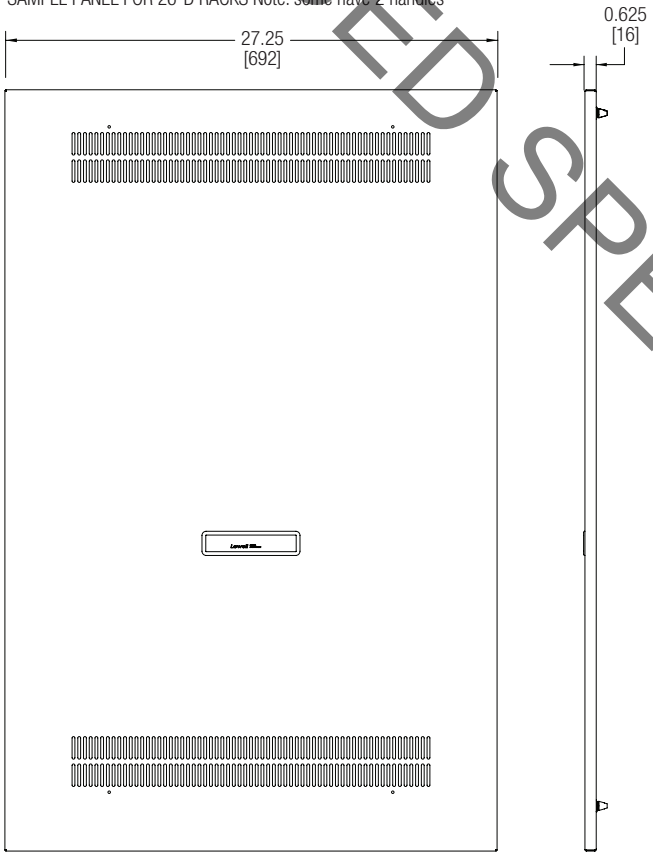

DISCONTINUED SPEC SHEET