Safety Technology International

Protective Cabinet

STI-7534, STI-7535 and STI-7535MED

Features

- Clear, protective polycarbonate cover with siren/strobe alarm.
- Design allows visibility at any angle.
- Complete with mounting hardware and gasket.
- Includes wire shelf, backing plate and siren/strobe alarm — MED models
- External mounting tabs or internal drill dimples.
- Cover includes a coated steel internal mounting plate with a baked on white enamel finish.
- Siren/strobe alarm lens is red. Also available with amber, green, blue or white lens.
- Siren offers 32 user selectable tones.
- Alarm can be set for a piercing 100 dB or 85 dB.
- Independent strobe and siren timing of 15 seconds, 30 seconds, 60 seconds or continuous.
- Powered by a 9 VDC battery or external 12-30 volts.
- Low battery indicator.

We protect the things that protect you.®

Table of Contents

Warnings ..... page 2
Cleaning Instructions ..... page 2
Dimensions..... page 3
Specifications ..... page 3
Installation of Cabinet ..... page 4
Installation of Alarm ..... page 4
Alarm Electronic Setup ..... page 5
Alarm Tones ..... page 5
Alarm Timing and Volume ..... page 5
Alarm Electronics Assembly..... page 6
Alarm Terminal Strip Connections ..... page 6
Assembly Parts List ..... page 7
Operation ..... page 7
Warranty..... page 7
Accessories & Replacement Parts ..... page 8

Warnings

All units are recommended for indoor use. Unit must be tested periodically to verify the life of battery. STI recommends you change the 9 Volt battery twice a year. When purchasing a siren/strobe alarm, you will need to periodically test the connections to make sure audibles function at a sound level to alert staff. Installer may need to purchase a simple audio-meter, typically available at your local electronics store, to measure the sound in areas where the alarm is expected to be heard during normal noise environment. Results from this test may prove it beneficial to purchase additional siren/strobe alarm units.

All specifications and information shown are current as of publication and subject to change without notice.

Cleaning

1. Rinse cover with water to remove abrasive dust and dirt.
2. Wash with soap or mild detergent using a soft cloth. (DO NOT SCRUB.)
3. Rinse once more, then dry with a soft cloth or chamois.
4. To remove grease or wet paint, rub gently with a cloth wetted thoroughly with naphtha, then wash and rinse. (DO NOT USE RAZOR BLADES.)

Dimensions

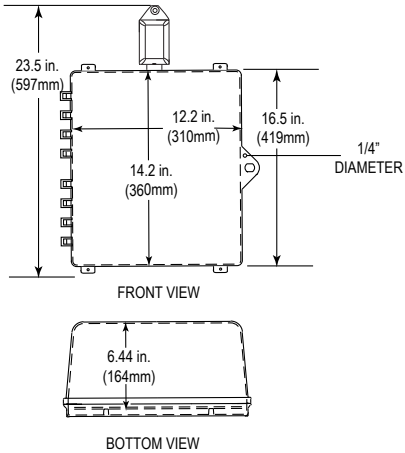

Specifications

Operating Voltage	Internal power 9 VDC battery (not included) Remote power 12-30 VDC
Operating Temperature	32°F -120°
Power Consumption	Stand by: 50µA Siren low volume: 85mA Siren high volume: 90mA Strobe: 25mA
Siren Volume	Low: 85 dB High: 100 dB
Alarm Timing	Independent control for siren and strobe: 15s, 30s, 60s, continuous
Low Battery Warning	LED flash once every 30 seconds
Form C Dry Contacts rated for	0-30VAC/DC, 1 Amp Contacts reset after longest alarm setting
Key Switch	Alarm on: normally closed
Alarm Switch	Stand by: normally open contact required
Polycarbonate Flammability Rating	UL94V-2

Installation of Cabinet

Note: Installation of cabinet should be before installation of alarm because the mounting bracket butts up to cabinet.

1. Insert the (4) M06298 mounting tabs fully into backbox mounting tab slots. Use rubber mallet if necessary.
2. After selecting a suitable location, place cabinet in closed position, against the wall. Mark and drill (4) 1/4 in. diameter holes. Insert the (4) 19033 anchors. Mount cabinet by driving in the four #10 x 1 1/2 in. screws.

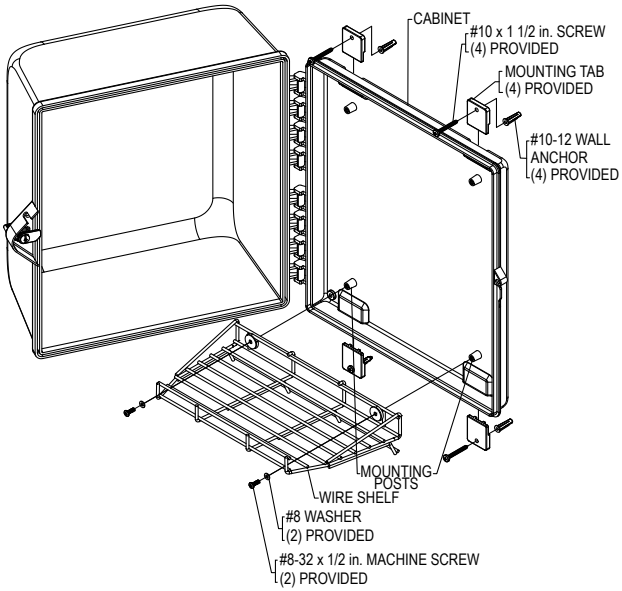

Installation of Shelf (included with STI-7535AED)

1. Align wire shelf to bottom mounting posts inside the cabinet.
2. Insert (2) #8-32 x ½ in. machine screw, through #8 washer, into mounting post and tighten.

Installation of Alarm

STEP 1 - Mounting Options

To key mount plate or into wall without electrical box

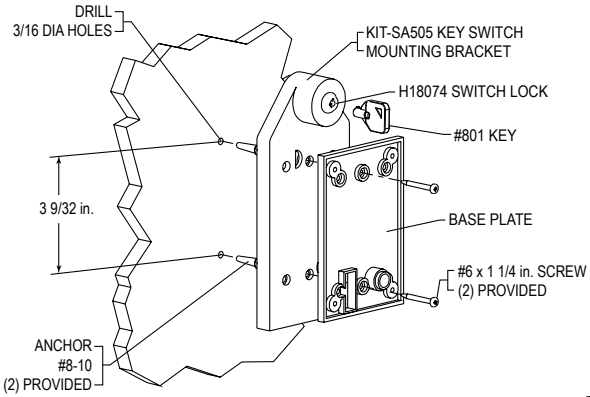

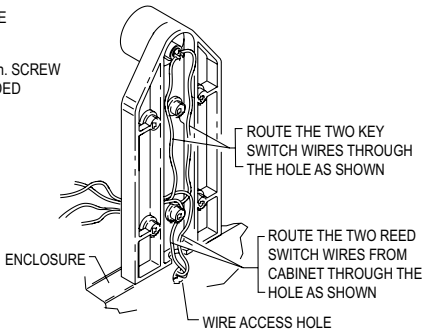

STEP 2 - Electronic Setup
Select alarm tone and timing sequence

Note: Select-Alert must be on a flat surface and lens must be installed or the tamper switch will trigger the alarm.

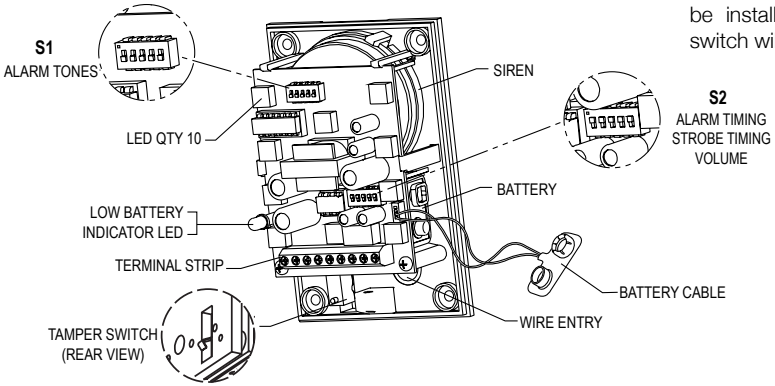

Step 3 - Alarm Tones - S1

		12345	
*	1	00000	BUZZ
	2	10000	SLOW ON/OFF
	3	01000	SLOW SIREN
	4	11000	3 BEEP/PAUSE/ REPEAT
	5	00100	UFO FAST
	6	10100	FAST SIREN
	7	01100	#5 FAST
	8	11100	#2 MEDIUM
	9	00010	#5 MEDIUM
	10	10010	SWOOP MEDIUM
	11	01010	#3 MEDIUM
	12	11010	BUZZ TONE
	13	00110	STEADY FAST
	14	10110	SWOOP SLOW
	15	01110	CONTINUOUS
	16	11110	FAST REPEAT

	12345	
17	00001	STANDARD ALARM
18	10001	#3 FAST
19	01001	#5 SLOW
20	11001	FAST BEEP
21	00101	SOUND A
22	10101	SOUND B
23	01101	SOUND C
24	11101	SOUND D
25	00011	SOUND D LOUD
26	10011	SOUND E
27	01011	SOUND F
28	11011	SOUND G
29	00111	SOUND H
30	10111	#4 LOW
31	01111	SOUND K
32	11111	CONTINUOUS FAST

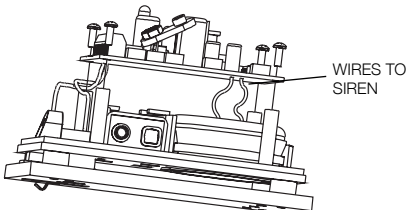

Note: Sound may be disabled by clipping wires to the siren. THIS WILL VOID ALL WARRANTIES. Remove two screws on circuit board; leave enough length of wire to possibly reattach in the future. Then insulate wires to prevent shorting to electronic components.

Step 4 - Alarm Timing and Volume - S2

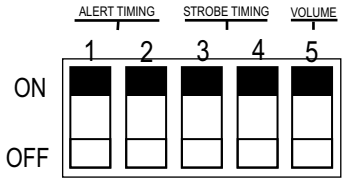

	ALARM TIMING	SIREN 1	SIREN 2	STROBE 3	STROBE 4	VOLUME 5
*	15 seconds	1	1	1	1	High 1
	30 seconds	1	0	1	0	
	60 seconds	0	1	0	1	Low 2
	Continuous	0	0	0	0	

1 = ON 0 = OFF

***Factory default settings**

Step 5 - Electronics Assembly

Wiring: After mounting circuit board assembly, connect wires. Refer to terminal strip connections (step 6).

Lens installation: Slide lip of lens behind circuit board mounting plate. Rotate lens into position. Secure with tamperproof screw and special. ⚠ Unit will not operate properly if lens cover is not installed.

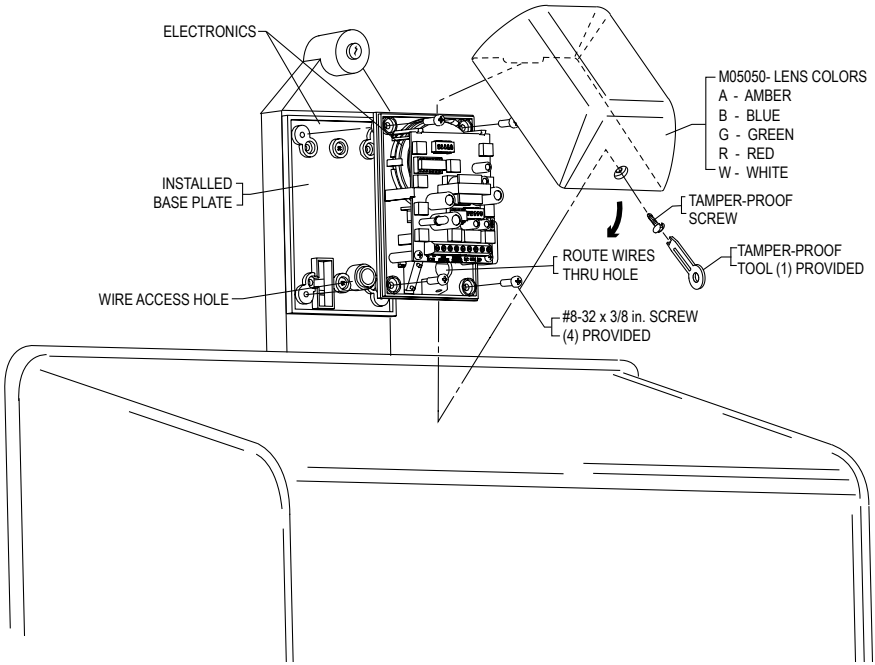

Step 6 - Terminal Strip Connections

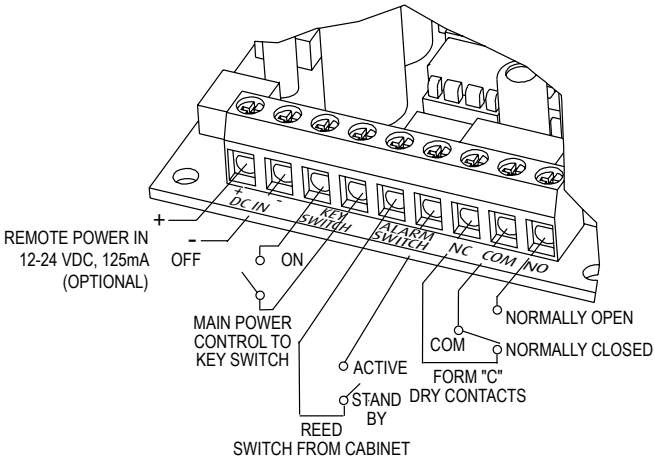

Note "DC IN" are the only polarity sensitive terminals. When external power is used, battery will act as a backup. "Dry Contacts: NC, COM, NO" are used for remote alarm monitoring.

Assembly Parts List

SIREN/STROBE ALARM

QTY.	PART #	DESCRIPTION
1	E05000	Electronics assembly (includes base plate & electronics assembly)
1	M05050-R	Red lens (unless otherwise specified)
1	M09723	Key switch mounting bracket
2	KIT-H18075	#801 key
1	H18074	Switch lock
1	KIT-E18151	N.C. reed switch and magnet (installed in cabinet)
4		Screw #8-32 x 3/8 in.
2		Screw #6 x 1 1/4 in.
2		Anchor #8-10
1		#8-32 x 1/2 in. tamper screw
1		Tamper wrench
1	BAT-9VDC	9 volt battery

CABINET

1		Hinged polycarbonate enclosure
4	M06298	Mounting tabs
4		#10 x 1 1/2 in. screw
4		Plastic anchor
1	W07532	Wire shelf (included with MED models only)
4	19002	#8-32 x 3/8 in. screw
1	H07503	Thumb lock - STI-7535 models
1	H18050	Key lock } STI-7534 models
2	KIT-H18054	CH751 } STI-7534 models

Step 7 - Operation

- Turn key switch onto arm.
- Cycle key switch to reset alarm
- Alarm will sound when cabinet is opened (alarm switch is electronically closed), alarm cover is removed or unit is removed from the wall.
- To service, turn key switch off.

Warranty

Three year guarantee against breakage of polycarbonate in normal use (one year on electro mechanical and electronic components).

Electronic warranty form at **www.sti-usa.com/wc14**.

⚠ **WARNING:** This product can expose you to chemicals including Dichloromethane, which is known to the State of California to cause cancer, and Bisphenol A (BPA), which is known to the State of California to cause birth defects or other reproductive harm. For

Accessories and Replacement Parts

STI-SA5000-R	Replacement Siren/Strobe Alarm - Red
KIT-H18054	Replacement key for cabinet lock on STI-7534
KIT-H18075	Replacement key for Siren/Strobe Alarm

USA

Safety Technology International

EMEA

2306 Airport Rd • Waterford, MI 48327, USA
Phone: 248-673-9898 • info@sti-usa.com • www.sti-usa.com

Taylor House • 34 Sherwood Road • Bromsgrove, Worcestershire • B60 3DR • England
Tel: +44 (0)1527 520 999 • info@sti-emea.com • www.sti-emea.com

Unit 7A • Lockhead Avenue • Airport Business Park • Waterford • X91 HWF2 • Ireland
info@sti-emea.com • www.sti-emea.com

Printed in USA

Subject to change without notice.

Inst. 7535MED 2018_12