ALARM LOCK LIMITED WARRANTY

ALARM LOCK SYSTEMS, INC. (ALARM LOCK) warrants its products to be free from manufacturing defects in materials and workmanship for twenty four months following the date of manufacture. ALARM LOCK will, within said period, at its option, repair or replace any product failing to operate correctly without charge to the original purchaser or user.

This warranty shall not apply to any equipment, or any part thereof, which has been repaired by others, improperly installed, improperly used, abused, altered, damaged, subjected to acts of God, or on which any serial numbers have been altered, defaced or removed. Seller will not be responsible for any dismantling or reinstallation charges, environmental wear and tear, normal maintenance expenses, or shipping and freight expenses required to return products to ALARM LOCK. Additionally, this warranty shall not cover scratches, abrasions or deterioration due to the use of paints, solvents or other chemicals.

THERE ARE NO WARRANTIES, EXPRESS OR IMPLIED, WHICH EXTEND BEYOND THE DESCRIPTION ON THE FACE HEREOF. THERE IS NO EXPRESS OR IMPLIED WARRANTY OF MERCHANTABILITY OR A WARRANTY OF FITNESS FOR A PARTICULAR PURPOSE. ADDITIONALLY, THIS WARRANTY IS IN LIEU OF ALL OTHER OBLIGATIONS OR LIABILITIES ON THE PART OF ALARM LOCK.

Any action for breach of warranty, including but not limited to any implied warranty of merchantability, must be brought within the six months following the end of the warranty period.

IN NO CASE SHALL ALARM LOCK BE LIABLE TO ANYONE FOR ANY CONSEQUENTIAL OR INCIDENTAL DAMAGES FOR BREACH OF THIS OR ANY OTHER WARRANTY, EXPRESS OR IMPLIED, EVEN IF THE LOSS OR DAMAGE IS CAUSED BY THE SELLER'S OWN NEGLIGENCE OR FAULT.

In case of defect, contact the security professional who installed and maintains your security system. In order to exercise the warranty, the product must be returned by the security professional, shipping costs prepaid and insured to ALARM LOCK. After repair or replacement, ALARM LOCK assumes the cost of returning products under warranty. ALARM LOCK shall have no obligation under this warranty, or otherwise, if the product has been repaired by others, improperly installed, improperly used, abused, altered, damaged, subjected to accident, nuisance, flood, fire or acts of God, or on which any serial numbers have been altered, defaced or removed. ALARM LOCK will not be responsible for any dismantling, reassembly or reinstallation charges, environmental wear and tear, normal maintenance expenses, or shipping and freight expenses required to return products to ALARM LOCK. Additionally, this warranty shall not cover scratches, abrasions or deterioration due to the use of paints, solvents or other chemicals.

This warranty contains the entire warranty. It is the sole warranty and any prior agreements or representations, whether oral or written, are either merged herein or are expressly cancelled. ALARM LOCK neither assumes, nor authorizes any other person purporting to act on its behalf to modify, to change, or to assume for it, any other warranty or liability concerning its products.

In no event shall ALARM LOCK be liable for an amount in excess of ALARM LOCK's original selling price of the product, for any loss or damage, whether direct, indirect, incidental, consequential, or otherwise arising out of any failure of the product. Seller's warranty, as hereinabove set forth, shall not be enlarged, diminished or affected by and no obligation or liability shall arise or grow out of Seller's rendering of technical advice or service in connection with Buyer's order of the goods furnished hereunder.

ALARM LOCK RECOMMENDS THAT THE ENTIRE SYSTEM BE COMPLETELY TESTED WEEKLY.

Warning: Despite frequent testing, and due to, but not limited to, any or all of the following; criminal tampering, electrical or communications disruption, it is possible for the system to fail to perform as expected. ALARM LOCK does not represent that the product/system may not be compromised or circumvented; or that the product or system will prevent any personal injury or property loss by burglary, robbery, fire or otherwise; nor that the product or system will in all cases provide adequate warning or protection. A properly installed and maintained alarm may only reduce risk of burglary, robbery, fire or otherwise but it is not insurance or a guarantee that these events will not occur. CONSEQUENTLY, SELLER SHALL HAVE NO LIABILITY FOR ANY PERSONAL INJURY, PROPERTY DAMAGE, OR OTHER LOSS BASED ON A CLAIM THE PRODUCT FAILED TO GIVE WARNING. Therefore, the installer should in turn advise the consumer to take any and all precautions for his or her safety including, but not limited to, fleeing the premises and calling police or fire department, in order to mitigate the possibilities of harm and/or damage.

ALARM LOCK is not an insurer of either the property or safety of the user's family or employees, and limits its liability for any loss or damage including incidental or consequential damages to ALARM LOCK's original selling price of the product regardless of the cause of such loss or damage.

Some states do not allow limitations on how long an implied warranty lasts or do not allow the exclusion or limitation of incidental or consequential damages, or differentiate in their treatment of limitations of liability for ordinary or gross negligence, so the above limitations or exclusions may not apply to you. This Warranty gives you specific legal rights and you may also have other rights which vary from state to state.

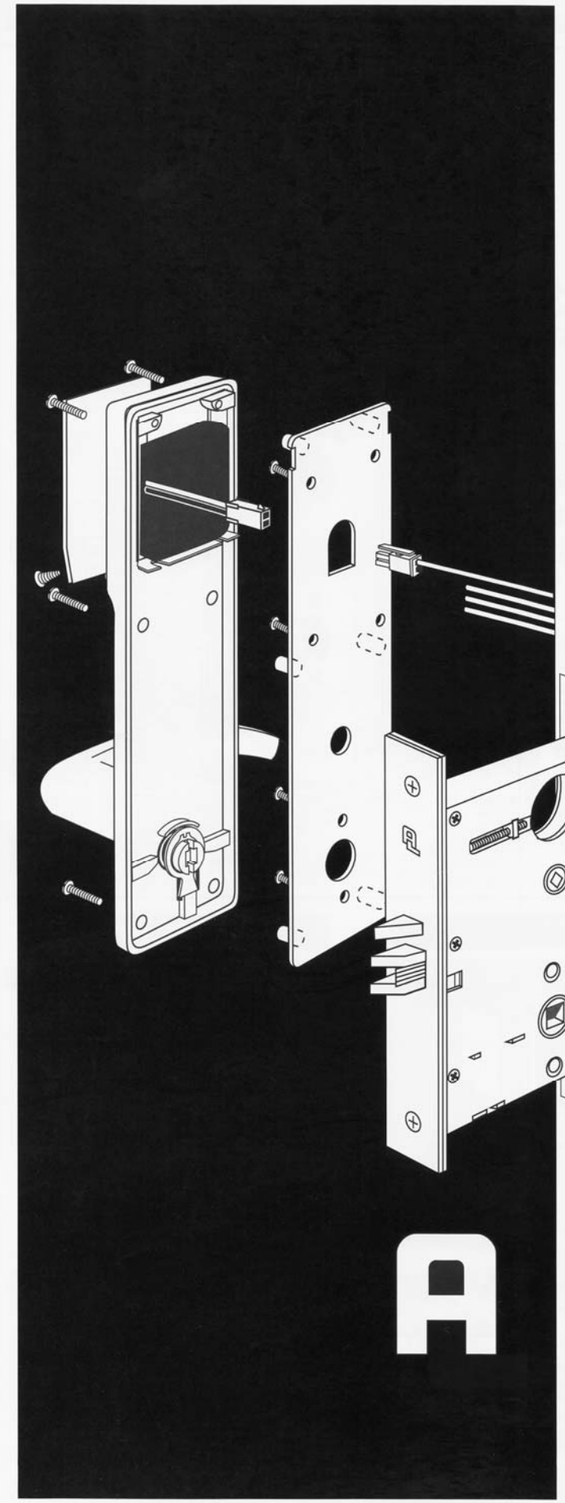

DL3500CR (ClassRoom)

The Keyless, Electronic Mortise Lockset

INSTALLATION INSTRUCTIONS

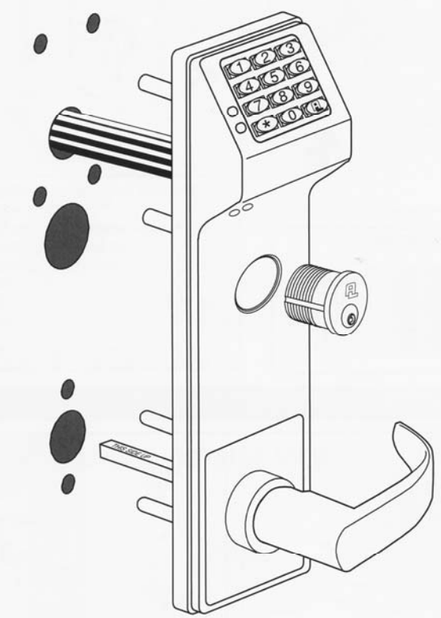

ALARM LOCK SYSTEMS, INC.
A division of the **NAPCO Security Group**
345 Bayview Avenue, Amityville, NY 11701
(631) 789-4871 1-800-252-5625
Fax: (631) 789-3383

© 2000, Alarm Lock TRILOGY is a registered trademark of Alarm Lock.

TECH SUPPORT: 1-800-ALA-LOCK

WI2123 10/14

PREPARING DOOR FOR INSTALLATION

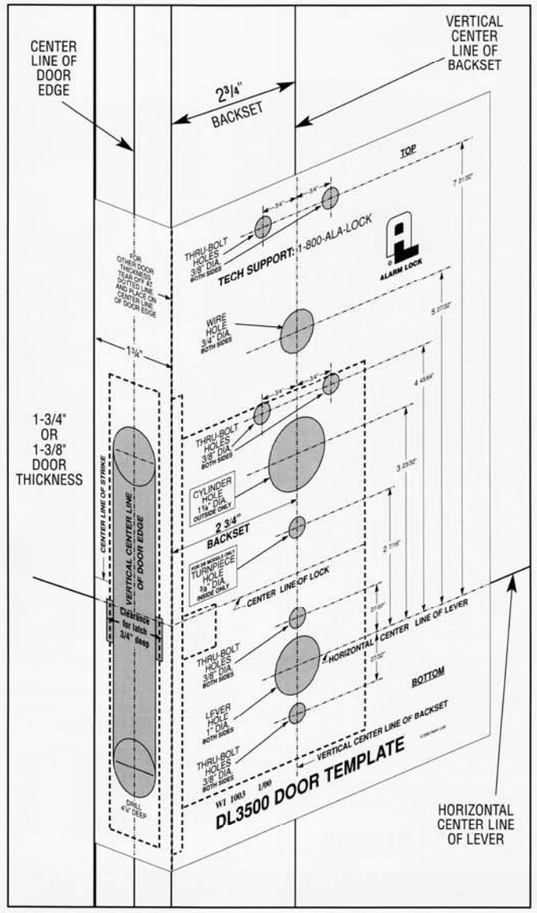

1 DOOR PREPARATION:

A. Mark Horizontal Center Line of Lever (at recommended height) on both sides of door. Mark Vertical Center Line of Door edge. Mark Vertical Center Line of Backset (2-3/4") on both sides of door.
B. Tape template in position on door, lining up with horizontal and vertical lines.
C. Mark all hole centers on each side of door as per template.
D. Mortise for lock and lock front in center of door edge as per template.
E. Drill all holes as required. It is recommended that all through holes be drilled from each side to avoid splintering.

METAL DOORS require horizontal and vertical lock case support provided by door manufacturer.

2 STRIKE INSTALLATION:

A. Position strike on door jamb and trace. Strike center line should be 3/8" above lock's center line.
B. Mortise into door jamb deep enough for dust box.
C. If dust box is not used, mortise deep enough to allow latchbolt and dead bolt to fully extend.

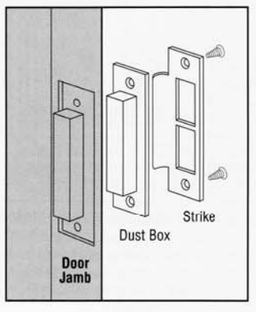

IF REVERSE HANDING IS REQUIRED:

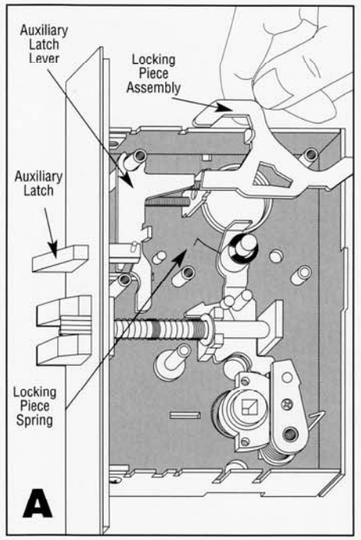

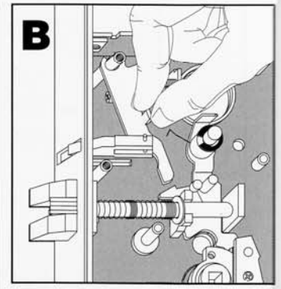

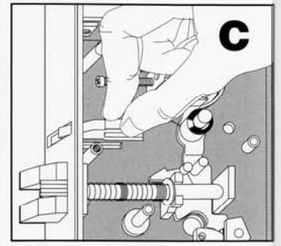

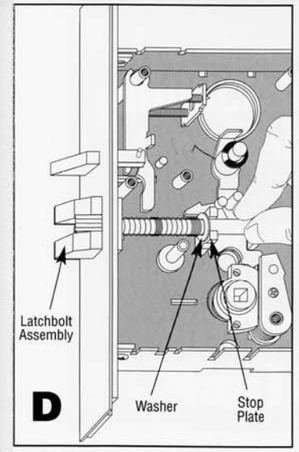

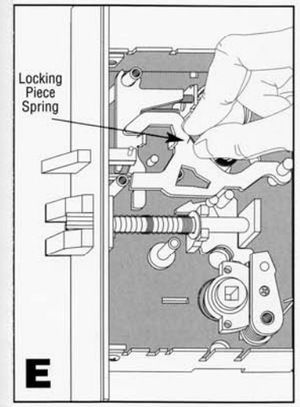

3 IF REVERSE HANDING IS REQUIRED:

Remove lock cover.
A. Remove spring from Locking Piece Assembly and lift Assembly out.
B. Pull back Auxiliary Latch Lever.
C. Disengage, rotate and re-engage Auxiliary Latch.
D. Lift up Latchbolt and remove, rotate and replace (Compress latchbolt spring with washer which should be in front of Stop Plate.
E. Replace Locking Piece assembly and spring.
Replace cover and fasten with 5 screws.

WHEN CHANGING HANDING PROPER STRIKE IS REQUIRED

REFERENCE: EXPLODED VIEW

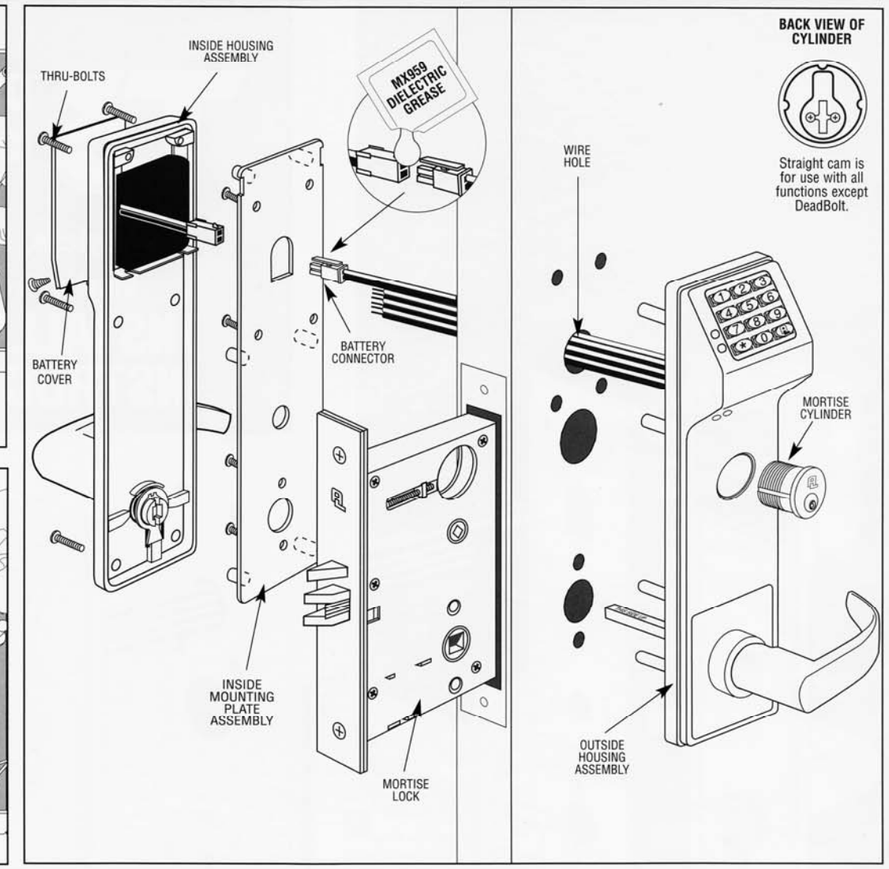

PREPARING LOCK FOR INSTALLATION:

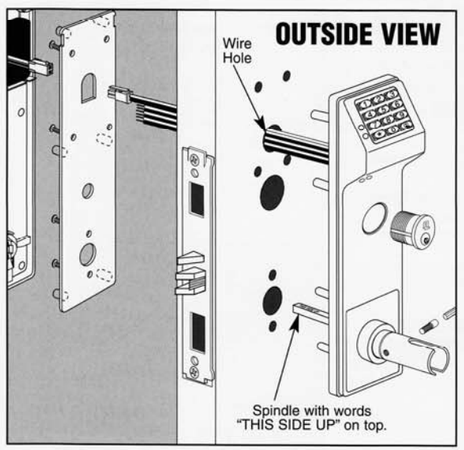

4 INSTALLING LOCK AND OUTSIDE TRIM ASSEMBLY

A. Insert lock into cavity and fasten with 2 screws.
B. Push all wires through Wire Hole in door and place Outside Housing Assembly on door and through lock.
C. Spindle position must be with words "THIS SIDE UP" on top.

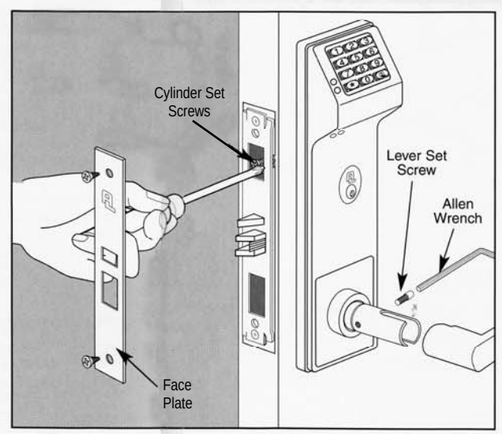

5 INSTALLING CYLINDER AND LEVER

A. Thread Cylinder through Outside Assembly and tighten up as far as possible. Make sure keyway is at bottom of cylinder.
B. Tighten the Cylinder Set Screw nearest the cylinder.
C. Position and fasten faceplate with 2 screws.
D. Slide lever on spindle and fasten with Lever Set Screw.

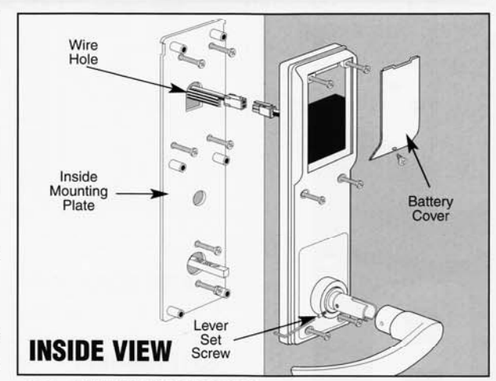

6 INSTALL INSIDE ASSEMBLY

A. Pull all wires through wire hole and Inside Mounting Plate.
B. Position and fasten Inside Mounting Plate with 6 screws. Do not pinch or cut wires.
C. Position Inside Housing Assembly on door and fasten with 6 screws.
D. Align and plug together Battery Connector. Seal with Dielectric Grease included. Fold wires and slide battery case into Inside Housing assembly.
E. Position and fasten Battery Cover with 1 screw.
F. Slide lever on spindle and fasten with the Lever Set Screw.

REFERENCE: WIRING

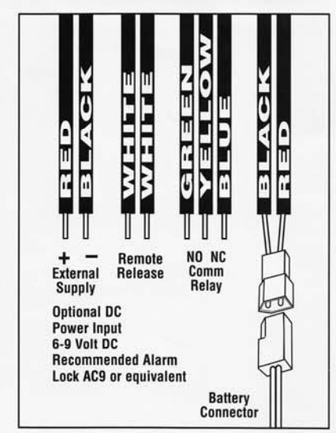

BEFORE CLOSING DOOR TEST LOCK FOR PROPER OPERATION

ALARM LOCK LIMITED WARRANTY

ALARM LOCK SYSTEMS, INC. (ALARM LOCK) warrants its products to be free from manufacturing defects in materials and workmanship for twenty four months following the date of manufacture. ALARM LOCK will, within said period, at its option, repair or replace any product failing to operate correctly without charge to the original purchaser or user.

This warranty shall not apply to any equipment, or any part thereof, which has been repaired by others, improperly installed, improperly used, abused, altered, damaged, subjected to acts of God, or on which any serial numbers have been altered, defaced or removed. Seller will not be responsible for any dismantling or reinstallation charges, environmental wear and tear, normal maintenance expenses, or shipping and freight expenses required to return products to ALARM LOCK. Additionally, this warranty shall not cover scratches, abrasions or deterioration due to the use of paints, solvents or other chemicals.

THERE ARE NO WARRANTIES, EXPRESS OR IMPLIED, WHICH EXTEND BEYOND THE DESCRIPTION ON THE FACE HEREOF. THERE IS NO EXPRESS OR IMPLIED WARRANTY OF MERCHANTABILITY OR A WARRANTY OF FITNESS FOR A PARTICULAR PURPOSE. ADDITIONALLY, THIS WARRANTY IS IN LIEU OF ALL OTHER OBLIGATIONS OR LIABILITIES ON THE PART OF ALARM LOCK.

Any action for breach of warranty, including but not limited to any implied warranty of merchantability, must be brought within the six months following the end of the warranty period.

IN NO CASE SHALL ALARM LOCK BE LIABLE TO ANYONE FOR ANY CONSEQUENTIAL OR INCIDENTAL DAMAGES FOR BREACH OF THIS OR ANY OTHER WARRANTY, EXPRESS OR IMPLIED, EVEN IF THE LOSS OR DAMAGE IS CAUSED BY THE SELLER'S OWN NEGLIGENCE OR FAULT.

In case of defect, contact the security professional who installed and maintains your security system. In order to exercise the warranty, the product must be returned by the security professional, shipping costs prepaid and insured to ALARM LOCK. After repair or replacement, ALARM LOCK assumes the cost of returning products under warranty. ALARM LOCK shall have no obligation under this warranty, or otherwise, if the product has been repaired by others, improperly installed, improperly used, abused, altered, damaged, subjected to accident, nuisance, flood, fire or acts of God, or on which any serial numbers have been altered, defaced or removed. ALARM LOCK will not be responsible for any dismantling, reassembly or reinstallation charges, environmental wear and tear, normal maintenance expenses, or shipping and freight expenses required to return products to ALARM LOCK. Additionally, this warranty shall not cover scratches, abrasions or deterioration due to the use of paints, solvents or other chemicals.

This warranty contains the entire warranty. It is the sole warranty and any prior agreements or representations, whether oral or written, are either merged herein or are expressly cancelled. ALARM LOCK neither assumes, nor authorizes any other person purporting to act on its behalf to modify, to change, or to assume for it, any other warranty or liability concerning its products.

In no event shall ALARM LOCK be liable for an amount in excess of ALARM LOCK's original selling price of the product, for any loss or damage, whether direct, indirect, incidental, consequential, or otherwise arising out of any failure of the product. Seller's warranty, as hereinabove set forth, shall not be enlarged, diminished or affected by and no obligation or liability shall arise or grow out of Seller's rendering of technical advice or service in connection with Buyer's order of the goods furnished hereunder.

ALARM LOCK RECOMMENDS THAT THE ENTIRE SYSTEM BE COMPLETELY TESTED WEEKLY.

Warning: Despite frequent testing, and due to, but not limited to, any or all of the following; criminal tampering, electrical or communications disruption, it is possible for the system to fail to perform as expected. ALARM LOCK does not represent that the product/system may not be compromised or circumvented; or that the product or system will prevent any personal injury or property loss by burglary, robbery, fire or otherwise; nor that the product or system will in all cases provide adequate warning or protection. A properly installed and maintained alarm may only reduce risk of burglary, robbery, fire or otherwise but it is not insurance or a guarantee that these events will not occur. CONSEQUENTLY, SELLER SHALL HAVE NO LIABILITY FOR ANY PERSONAL INJURY, PROPERTY DAMAGE, OR OTHER LOSS BASED ON A CLAIM THE PRODUCT FAILED TO GIVE WARNING. Therefore, the installer should in turn advise the consumer to take any and all precautions for his or her safety including, but not limited to, fleeing the premises and calling police or fire department, in order to mitigate the possibilities of harm and/or damage.

ALARM LOCK is not an insurer of either the property or safety of the user's family or employees, and limits its liability for any loss or damage including incidental or consequential damages to ALARM LOCK's original selling price of the product regardless of the cause of such loss or damage.

Some states do not allow limitations on how long an implied warranty lasts or do not allow the exclusion or limitation of incidental or consequential damages, or differentiate in their treatment of limitations of liability for ordinary or gross negligence, so the above limitations or exclusions may not apply to you. This Warranty gives you specific legal rights and you may also have other rights which vary from state to state.

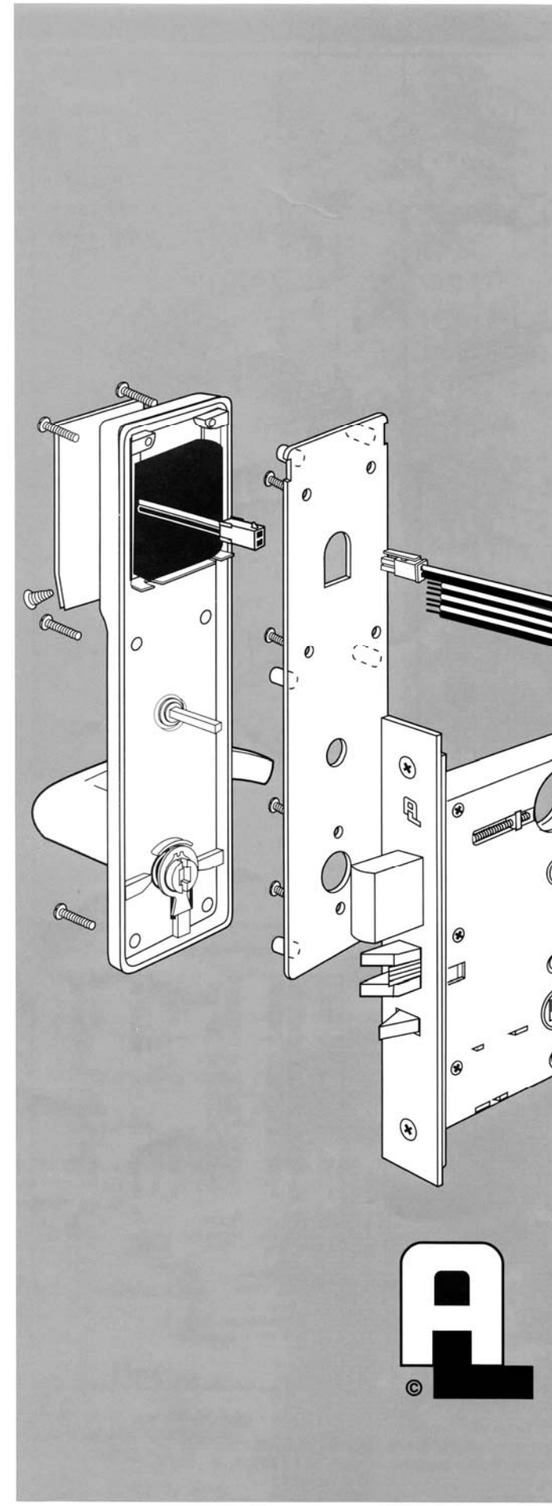

DL3500DB (DeadBolt)

The Keyless, Electronic Mortise Lockset

INSTALLATION INSTRUCTIONS

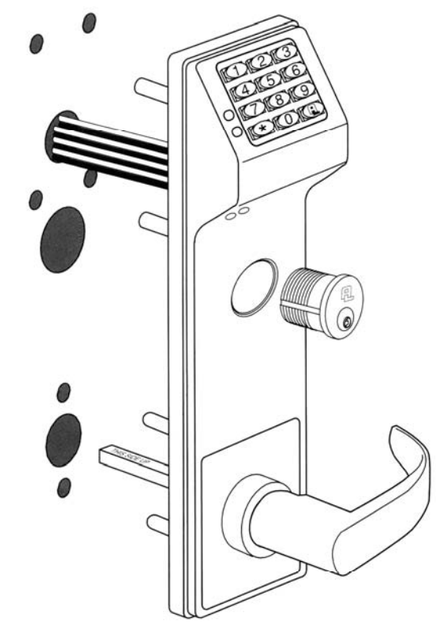

ALARM LOCK SYSTEMS, INC.
A division of the **NAPCO Security Group**
345 Bayview Avenue, Amityville, NY 11701
(631) 789-4871 1-800-252-5625
Fax: (631) 789-3383

© 2000, Alarm Lock TRILOGY is a registered trademark of Alarm Lock.

TECH SUPPORT: 1-800-ALA-LOCK

WI2122 10/14

PREPARING DOOR FOR INSTALLATION

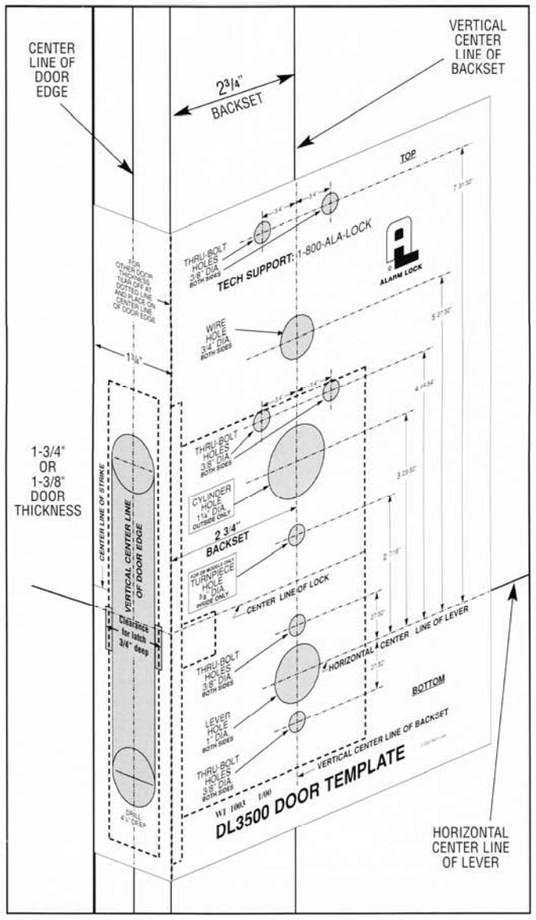

1 DOOR PREPARATION:

A. Mark Horizontal Center Line of Lever (at recommended height) on both sides of door. Mark Vertical Center Line of Door edge. Mark Vertical Center Line of Backset (2-3/4") on both sides of door.
B. Tape template in position on door, lining up with horizontal and vertical lines.
C. Mark all hole centers on each side of door as per template.
D. Mortise for lock and lock front in center of door edge as per template.
E. Drill all holes as required. It is recommended that all through holes be drilled from each side to avoid splintering.

METAL DOORS require horizontal and vertical lock case support provided by door manufacturer.

2 STRIKE INSTALLATION:

A. Position strike on door jamb and trace. Strike center line should be 3/8" above lock's center line.
B. Mortise into door jamb deep enough for dust box.
C. If dust box is not used, mortise deep enough to allow latchbolt and dead bolt to fully extend.

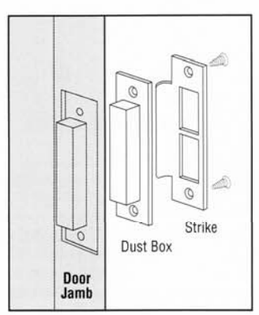

IF REVERSE HANDING IS REQUIRED:

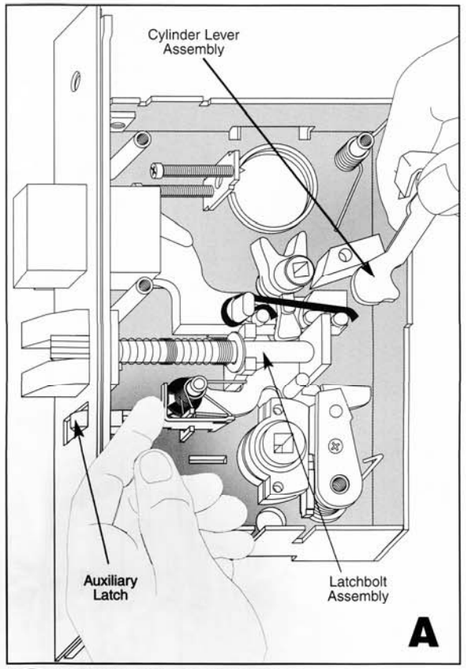

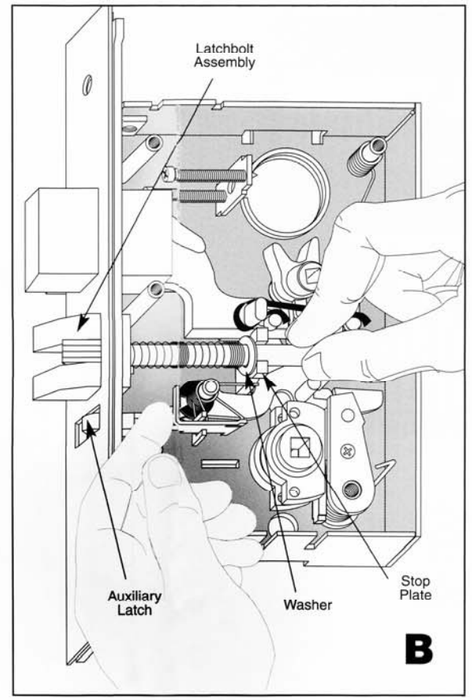

3 IF REVERSE HANDING IS REQUIRED:

Remove lock cover.
A. Lift out Cylinder Lever Assembly. Pull back Auxiliary latch and hold.
B. Lift up Latchbolt and remove, rotate and replace (Compress latchbolt spring with washer which should be in front of Stop Plate). Replace Cylinder Lever Assembly. Replace cover and fasten with 5 screws.

WHEN CHANGING HANDING PROPER STRIKE IS REQUIRED

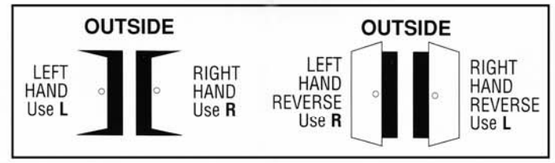

REFERENCE: EXPLODED VIEW

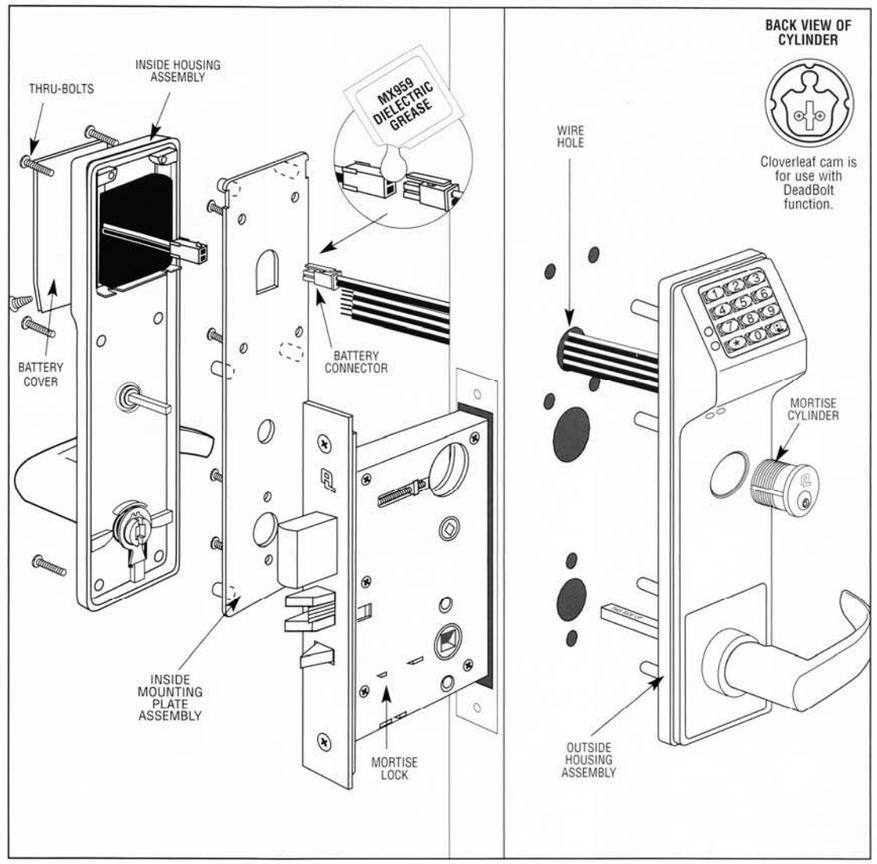

PREPARING LOCK FOR INSTALLATION:

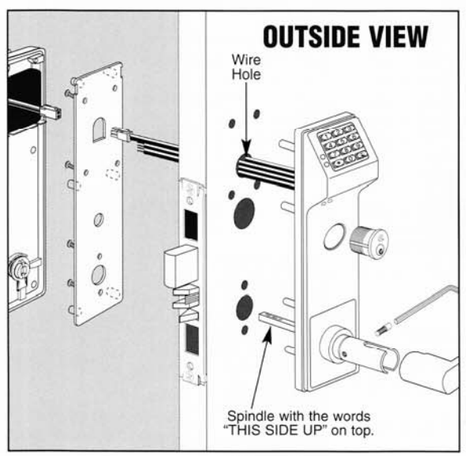

4 INSTALLING LOCK AND OUTSIDE TRIM ASSEMBLY

A. Insert lock into cavity and fasten with 2 screws.
B. Push all wires through Wire Hole in door and place Outside Housing Assembly on door and through lock.
C. Spindle position must be with words "THIS SIDE UP" on top.

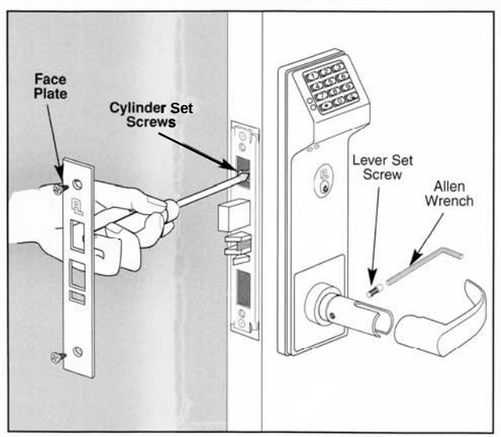

5 INSTALLING CYLINDER AND LEVER

A. Thread Cylinder through Outside Assembly and tighten up as far as possible. Make sure keyway is at bottom of cylinder.
B. Tighten the Cylinder Set Screw nearest the cylinder.
C. Position and fasten faceplate with 2 screws.
D. Slide lever on spindle and fasten with Lever Set Screw.

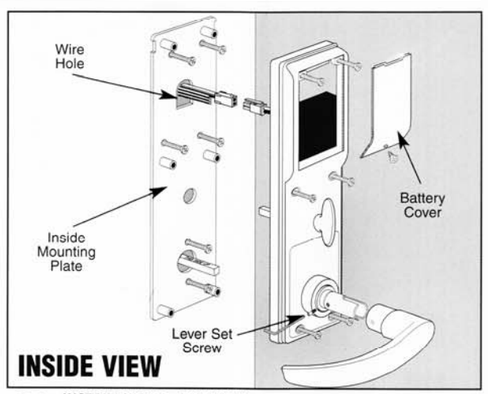

6 INSTALL INSIDE ASSEMBLY

A. Pull all wires through wire hole and Inside Mounting Plate.
B. Position and fasten Inside Mounting Plate with 6 screws. Do not pinch or cut wires.
C. Position Inside Housing Assembly on door and fasten with 6 screws.
D. Align and plug together Battery Connector. Seal with Dielectric Grease included. Fold wires and slide battery case into Inside Housing assembly.
E. Position and fasten Battery Cover with 1 screw.
F. Slide lever on spindle and fasten with Lever Set Screw.

REFERENCE: WIRING

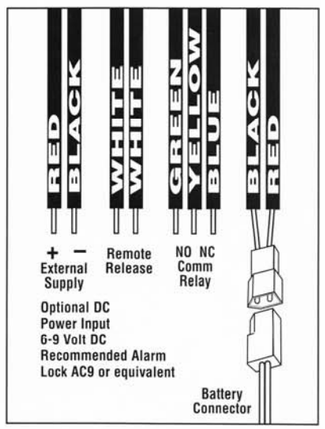

BEFORE CLOSING DOOR TEST LOCK FOR PROPER OPERATION

SUPPLEMENT to Installation Instructions

The steps below supplement the installation instructions, continuing after the last step:

INSTALL INSIDE ASSEMBLY

A. See Fig. A. Before installing the black plastic "inside housing", apply dielectric grease (provided) into all of the plugs and sockets that are described below. Connect the ribbon cable plug into its socket located on the inside housing circuit board, then connect the Auxiliary Power, Remote Release, and External Relay Contact plugs into their respective sockets shown in Fig. A. **Note:** These plugs and sockets fit only one way -- do not force any connections. Do not allow wires to cross or lay on top of each other. Before tightening any of the screws or bolts described below, jiggle the ribbon cable and all other wiring to ensure wires are not pinched.

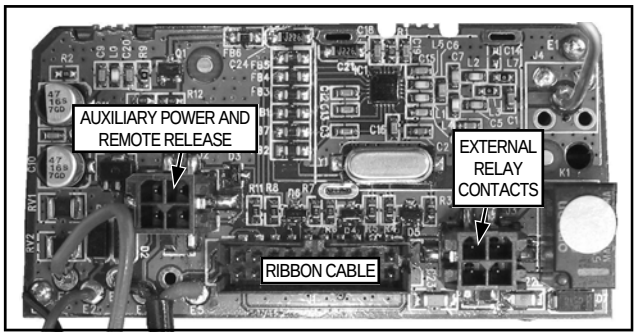

FIG. A: SOCKETS LOCATED IN THE INSIDE HOUSING CIRCUIT BOARD

B. Secure the top of the "inside housing" to the inside mounting plate with two black 4-40 x ¼ flat head Phillips or spanner head security screws. See Fig. B.

FIG. B: SECURE TOP OF INSIDE HOUSING

C. Connect the battery pack plug to the circuit board battery plug as shown in Fig. C. Note that upon connection of the battery pack, you will hear three beeps.

ALARM LOCK SYSTEMS, INC.
A division of the **Napco Security Technologies, Inc.**
345 Bayview Avenue
Amityville, New York 11701
For Sales and Repairs 1-800-ALA-LOCK
For Technical Service 1-800-645-9440
(Note: Technical Service is for locksmiths and alarm professionals only)
Publicly traded on NASDAQ Symbol: NSSC

ALARM LOCK

T3 6500 Series

The Keyless, Electronic Network Mortise Lockset

INSTALLATION INSTRUCTIONS

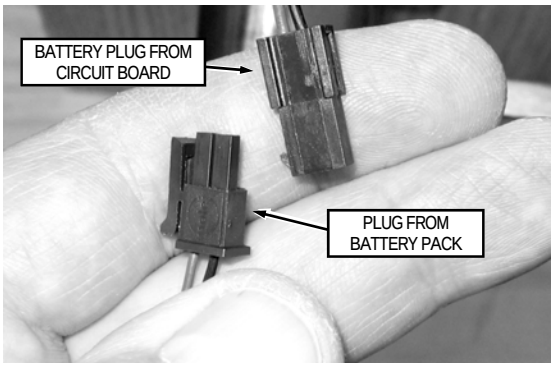

FIG. C: CONNECT THE BATTERY PLUGS

D. Insert the battery pack into inside housing as shown in Fig. D.

FIG. D: INSERT BATTERY PACK INTO HOUSING ("SEALED" TYPE SHOWN)

E. Secure the battery cover to the "inside housing" with two black 4-40 x ¼ flat head Phillips or spanner head security screws as shown in Fig. E.

(continued)

© ALARM LOCK 2016

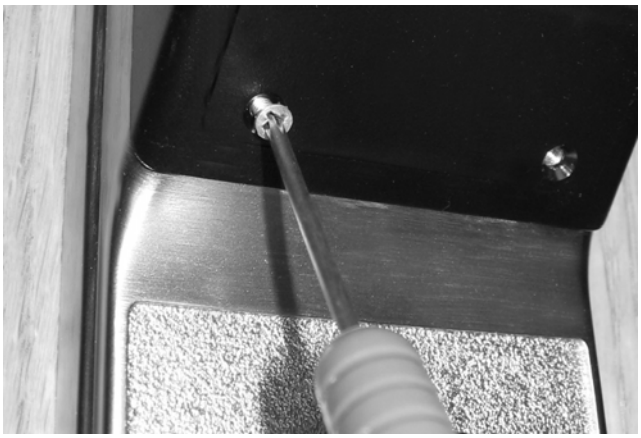

FIG. E: SECURE BATTERY COVER

PROGRAMMING

Your lock memory can be programmed (and re-programmed again and again) to suit your changing requirements. Instead of distributing metal keys, add *User Codes* to the lock's memory and distribute them to Users. Instead of collecting metal keys, simply delete the *User Codes* from the lock memory. To program your lock using the lock keypad, see the programming instructions included with your lock.

TROUBLESHOOTING

Electronic Trouble:

Lock will not accept new codes during programming.

- **Solution:** Follow the "**ERASE ALL PROGRAMMING**" procedure (see page 3), then start programming again.

Lock drains batteries quickly.

- **Solution:** Check for pinched or cut wires. Check for water damage. If condition persists, consult factory.

Lock is inoperative.

- **Solution:** Check batteries for proper polarity and check for pinched or cut wires.

Lock sounds "pulsing beeps" (with red flickering LED) during lock operation.

- **Solution:** Low battery signal - replace batteries.

Mechanical Trouble:

Lever pulls off.

- Lever Catch not fully engaged. Lock is not centered on door. Door too thick.

Unable to assemble outside lever.

- Key and tailpiece orientation are incorrect.

Latch will not fully retract.

- Lock is not properly engaged with latch or misaligned. Lock is not centered on door.

Key binds in lock.

- Lever Catch not fully engaged. Lock is not centered on door. Check for proper tailpiece and proper orientation of tailpiece.

WIRE CONNECTIONS

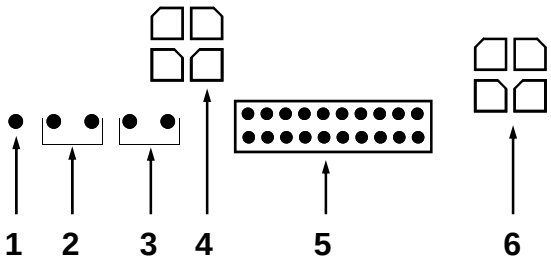

1. **Ground** **(Shown above for reference only)**
2. **Battery Connector**
3. **Motor Connector**
4. **Auxiliary Power / Remote Release**
   Wire colors in supplied plug are as follows:
   Auxiliary Power:
   Red: 6 - 9VDC
   Black: Ground
   Remote Release:
   Two white wires (short to activate).
5. **Ribbon Cable**
6. **External Relay Contacts**
   Wire colors are as follows:
   COM-Orange / NO-Green / NC-Yellow

FIG. F: WIRE CONNECTIONS

WIRING AND POWER UP

Note: See the lock programming instructions for additional programming information.

Auxiliary Power:

Red / Black wires - Use an external 7.5VDC power source for operation without batteries.

Remote Release:

White / White wires - Wire a normally-open contact to these two white wires. Momentarily short to unlock, thus allowing the person to pass through door. **NOTE:** These Remote Release wires are enabled from the factory. See the lock programming instructions for additional information.

External Relay Contacts:

COM-Orange / NO-Green / NC-Yellow - See the lock programming instructions ("Function 67") for the available relay programming options.

POWER UP

Note: Battery packs are available in two types: A "sealed" battery pack that must be discarded if found to be weak, or a "user-serviceable" pack that can be disassembled and refilled with four (4) C-cell batteries (use alkaline batteries only). For applying power for the first time, see **FIRST TIME POWER UP**; if re-applying power to a lock previously in operation, go to "**WHEN POWER IS RE-APPLIED**".

FIRST TIME POWER UP

1. Unpack the lock.
2. With the batteries disconnected, hold down the

key for 10 seconds and release.

3. Connect the batteries and listen for 3 beeps. Within 5 seconds of hearing the 3 beeps, press and hold until beeping starts. This will clear the lock of all programmed data. **Important:** If you do NOT hear these 3 beeps, you must start over at step 2.
4. Listen for another series of beeps and LED flashes *followed by 10 seconds of silence*. The lock is now ready to program. *Failure to follow this exact procedure can result in erratic lock behavior*.

WHEN POWER IS RE-APPLIED

When power is re-applied to a lock that was previously in operation, proceed as follows:

1. Disconnect battery pack connector.
2. With battery power disconnected, press and hold down for 10 seconds to ensure discharge of all capacitors.
3. Re-connect battery pack (lock will sound 3 short beeps). If beeps are NOT heard, then restart from step 1.
4. Do not press any keys for 15 seconds.
5. After 15 seconds, the LED will flash red 6 times and 6 beeps will sound.
6. The lock is now ready for use. The pre-existing program is loaded from fixed memory. Reset the clock using Functions 38, 39 and 40 as detailed in the lock keypad programming instructions provided or download the clock settings ***wirelessly*** as described in the **DL-Windows Wireless Setup & Configuration Instructions** (OI352).

ERASE ALL PROGRAMMING

The "out of box" factory default will be loaded.

1. Remove the battery pack.
2. With battery power disconnected, press and hold down for 10 seconds to ensure discharge of all capacitors.
3. Re-install the battery pack (lock will sound 3 short beeps). If beeps are not heard, then restart from step 1.
4. Within 5 seconds after hearing the 3 short beeps, press and hold until the lock begins to beep, then release.
5. A series of 5 RED LED and 5 beeps will be heard followed by 10 seconds of silence, then 3 GREEN LED's and 3 fast beeps.
   All settings and programming have been erased and the lock is now ready for use. **Note:** All lock programming can also be erased (without need to disconnect the batteries) by entering Function 99 as detailed in the lock keypad programming instructions or download the clock settings ***wirelessly*** as described in the **DL-Windows Wireless Setup & Configuration Instructions** (OI352).

BATTERY REPLACEMENT

When a valid code is entered and the batteries are weak, the LED will flicker red and the sounder will sound "pulsing beeps". *Always replace weak batteries as soon as possible*.

CAUTION: Do not press any keys while batteries are disconnected or you may erase the real-time clock settings.

1. At the back of the lock, remove the two screws at the bottom of the lock housing and remove the cover.
2. Pull out the battery pack. Disconnect the old battery pack and quickly (within 1 minute) re-connect the new battery pack. Listen for any beeping sounds.
3. If you **DO NOT** hear the 3 beeps when power is re-applied, all programming and settings have been retained, and the lock is ready for use. Go to step 5.
4. If you **DO** hear 3 beeps when power is re-applied, do not press any keys for 15 seconds. After the 15 second period, the LED will flash red 6 times and 6 beeps will sound. Reset the clock using functions 38, 39 and 40 as detailed in the lock keypad programming instructions or download the clock settings ***wirelessly*** as described in the **DL-Windows Wireless Setup & Configuration Instructions** (OI352).
5. Replace the cover and tighten the screws.

WIRELESS LOCK CONFIGURATION OVERVIEW

The Trilogy Networx™ wireless door locks allow you to upload and download programming features ***wirelessly*** using a computer connected to a computer network. With "wireless" communication, the various cables and/or AL-DTM Data Transfer Module devices are NOT required to transfer data. With a few clicks of the computer mouse, you can use your computer to retrieve logs, download User Codes and program features into and out of each wireless door lock in your installation. See the **DL-Windows Wireless Setup & Configuration Instructions** (OI352) for complete information.

Important Note: Keypad programming of User Codes, Features, Time Zones, and Schedules is available as a ***temporary*** convenience to allow the lock to be put into use before installing and configuring a wireless network. *Therefore, all lock programming added via the keypad cannot be retrieved into DL-Windows.* If you decide to start programming your wireless lock via the keypad, we recommend you keep hardcopy records (in a secure location) of all Users, their User Codes, and any proximity cards that may have been programmed. Keeping complete and accurate records saves time because after the wireless network is set up, any programming added via the keypad must be re-added to DL-Windows and downloaded back to the lock(s).

DL-Windows software is installed on a computer that is connected to a computer network; connected to this network is an intermediate device called a *Gateway* that communicates to a radio located inside each door lock. In this way, the software allows full programming and control of each lock in the system.

To ensure each physical lock is identified correctly by DL-Windows, the factory assigns each lock a unique serial number. After locks are installed on the doors and the Gateways are mounted, the Gateways search for new locks, allowing them to be enrolled into the system.

For every new wireless lock installed on a door, we recommend that you fill out a new yellow-colored "Lock ID Card" with the location, lock model and serial number. These ID

Windows is a registered trademark of the Microsoft Corporation. Other products, product names and services described in this manual are for identification purposes only and may be trademarks of their respective companies.

cards are a convenient way to keep track of and ensure all locks are correctly enrolled in the DL-Windows Account.

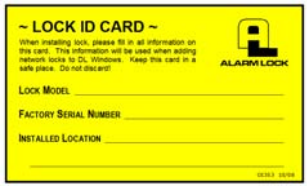

Flexible Setup

In addition to wireless communication, *these wireless door locks can also be programmed at the keypad*. This means that locks can be installed on the doors and *immediately be put into use via keypad programming*--even before a wireless network is set up. Therefore, you can install the locks on the doors before configuring the wireless network, or you can set up the wireless network first and add locks later. If you wish, you can even start by designing a "virtual" system within DL-Windows (creating new Accounts, adding Users and configuring lock features, etc.), then set up the network and install the lock hardware later. But in the end, after your lock hardware is physically installed and the network is up and running, you can run DL-Windows to link the "virtual" system saved on your computer with the "real" lock hardware on the doors.

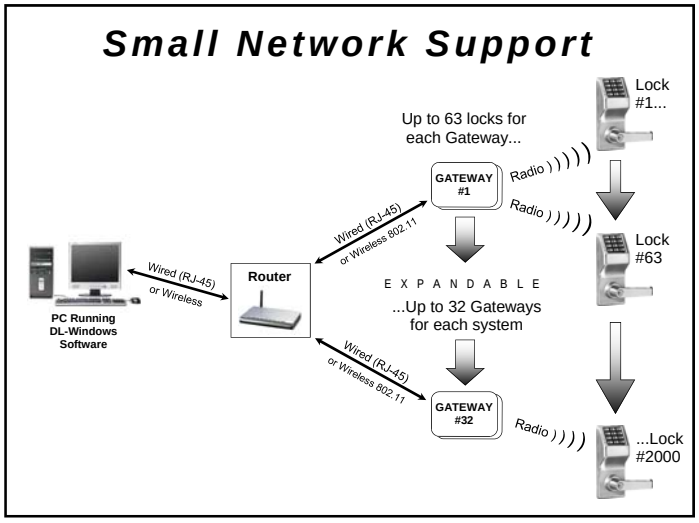

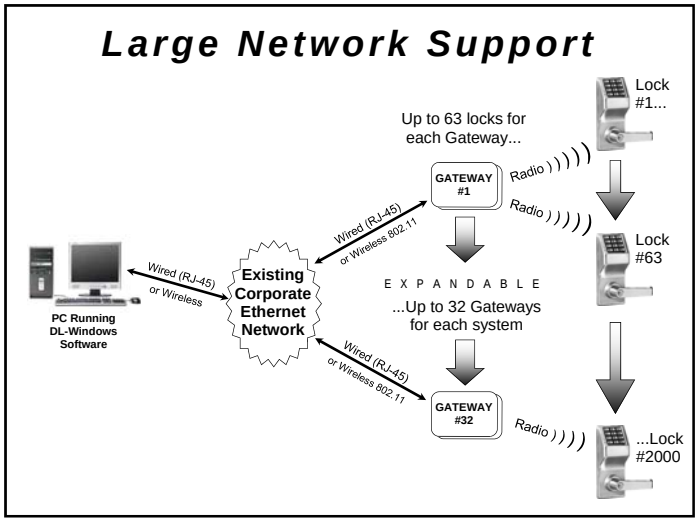

ALARM LOCK LIMITED WARRANTY

ALARM LOCK SYSTEMS, INC. (ALARM LOCK) warrants its products to be free from manufacturing defects in materials and workmanship for 24 months following the date of manufacture. ALARM LOCK will, within said period, at its option, repair or replace any product failing to operate correctly without charge to the original purchaser or user.

This warranty shall not apply to any equipment, or any part thereof, which has been repaired by others, improperly installed, improperly used, abused, altered, damaged, subjected to acts of God, or on which any serial numbers have been altered, defaced or removed. Seller will not be responsible for any dismantling or reinstallation charges.

THERE ARE NO WARRANTIES, EXPRESS OR IMPLIED, WHICH EXTEND BEYOND THE DESCRIPTION ON THE FACE HEREOF. THERE IS NO EXPRESS OR IMPLIED WARRANTY OF MERCHANTABILITY OR A WARRANTY OF FITNESS FOR A PARTICULAR PURPOSE. ADDITIONALLY, THIS WARRANTY IS IN LIEU OF ALL OTHER OBLIGATIONS OR LIABILITIES ON THE PART OF ALARM LOCK.

Any action for breach of warranty, including but not limited to any implied warranty of merchantability, must be brought within the six months following the end of the warranty period. IN NO CASE SHALL ALARM LOCK BE LIABLE TO ANYONE FOR ANY CONSEQUENTIAL OR INCIDENTAL DAMAGES FOR BREACH OF THIS OR ANY OTHER WARRANTY, EXPRESS OR IMPLIED, EVEN IF THE LOSS OR DAMAGE IS CAUSED BY THE SELLER'S OWN NEGLIGENCE OR FAULT.

In case of defect, contact the security professional who installed and maintains your security system. In order to exercise the warranty, the product must be returned by the security professional, shipping costs prepaid and insured to ALARM LOCK. After repair or replacement, ALARM LOCK assumes the cost of returning products under warranty. ALARM LOCK shall have no obligation under this warranty, or otherwise, if the product has been repaired by others, improperly installed, improperly used, abused, altered, damaged, subjected to accident, nuisance, flood, fire or acts of God, or on which any serial numbers have been altered, defaced or removed. ALARM LOCK will not be responsible for any dismantling, reassembly or reinstallation charges.

This warranty contains the entire warranty. It is the sole warranty and any prior agreements or representations, whether oral or written, are either merged herein or are expressly canceled. ALARM LOCK neither assumes, nor authorizes any other person purporting to act on its behalf to modify, to change, or to assume for it, any other warranty or liability concerning its products.

In no event shall ALARM LOCK be liable for an amount in excess of ALARM LOCK's original selling price of the product, for any loss or damage, whether direct, indirect, incidental, consequential, or otherwise arising out of any failure of the product. Seller's warranty, as hereinabove set forth, shall not be enlarged, diminished or affected by and no obligation or liability shall arise or grow out of Seller's rendering of technical advice or service in connection with Buyer's order of the goods furnished hereunder.

ALARM LOCK RECOMMENDS THAT THE ENTIRE SYSTEM BE COMPLETELY TESTED WEEKLY.

Warning: Despite frequent testing, and due to, but not limited to, any or all of the following; criminal tampering, electrical or communications disruption, it is possible for the system to fail to perform as expected. ALARM LOCK does not represent that the product/system may not be compromised or circumvented; or that the product or system will prevent any personal injury or property loss by burglary, robbery, fire or otherwise; nor that the product or system will in all cases provide adequate warning or protection. A properly installed and maintained alarm may only reduce risk of burglary, robbery, fire or otherwise but it is not insurance or a guarantee that these events will not occur. CONSEQUENTLY, SELLER SHALL HAVE NO LIABILITY FOR ANY PERSONAL INJURY, PROPERTY DAMAGE, OR OTHER LOSS BASED ON A CLAIM THE PRODUCT FAILED TO GIVE WARNING. Therefore, the installer should in turn advise the consumer to take any and all precautions for his or her safety including, but not limited to, fleeing the premises and allege police or fire department, in order to mitigate the possibilities of harm and/or damage.

ALARM LOCK is not an insurer of either the property or safety of the user's family or employees, and limits its liability for any loss or damage including incidental or consequential damages to ALARM LOCK's original selling price of the product regardless of the cause of such loss or damage.

Some states do not allow limitations on how long an implied warranty lasts or do not allow the exclusion or limitation of incidental or consequential damages, or differentiate in their treatment of limitations of liability for ordinary or gross negligence, so the above limitations or exclusions may not apply to you. This Warranty gives you specific legal rights and you may also have other rights which vary from state to state.

To Disable the Flashing Lightbar

When the **lightbar** located on the rear lock housing activates during Lockdown, it flashes a red LED once per second. The **lightbar** is synchronized with the lock's internal **relay** (wired in parallel). Therefore, any feature that activates the **relay** also activates the **lightbar** (**lightbar** follows **relay**).

Disable the lightbar:
Cut the red wire shown in the image below (arrow) and tape both ends. The **relay** remains operational.

If the **relay** is not required then simply do not use the **relay** output; the **lightbar** will remain operational.

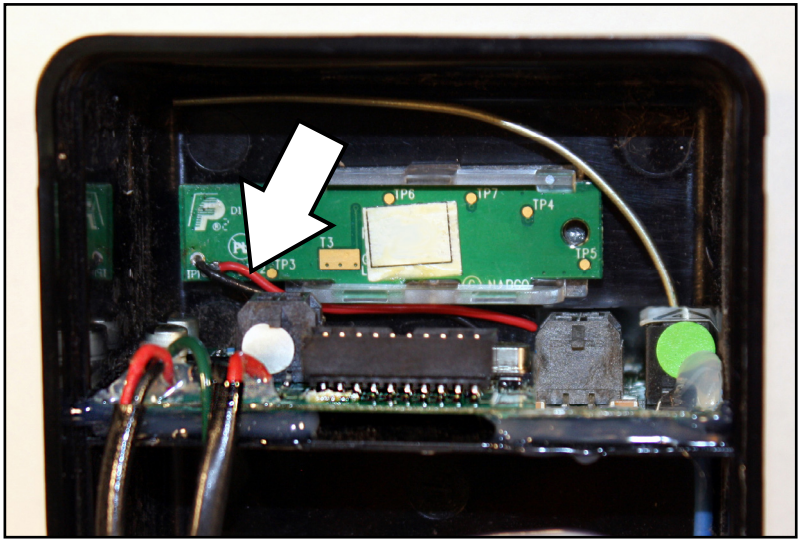

Cut red wire (arrow) to disable lightbar. Relay remains operational.

© Alarm Lock 2016

TRILOGY NETWORX™ LOCKS
RELAY WIRING COLORS
ADDENDUM

For all wireless Trilogy 6000 series Networx door locks, the correct wire colors and descriptions are:

Common = Orange
N/O = Green
N/C = Yellow

© Alarm Lock 2010

IMPORTANT!
Upgrade the Firmware!

When this Networx lock was manufactured, it was loaded with the most recent firmware available at the time. However, an updated version of the firmware may be available. For proper operation, we strongly recommend updating the lock firmware prior to (or just after) installation. ***If using the latest "version 2" Gateways and Expanders, be certain the latest firmware is installed***.

Download the latest firmware here:
http://tech.napcosecurity.com/index.php/software/brand/brand_id/2

© Alarm Lock 2017

ALARM LOCK
345 Bayview Avenue
Amityville, New York 11701
For Sales and Repairs 1-800-ALA-LOCK
For Technical Service 1-800-645-9440
Publicly traded on NASDAQ Symbol: NSSC

© ALARM LOCK 2017

Wireless Trilogy® DL6500 & ETDLN

Supports Version 2 Gateways and Expanders

Programming Instructions

WI1836BLF 05/17

DL6500 & ETDLN

AL-IME-USB
GATEWAY MODULE

DL-WINDOWS PROGRAMMING SOFTWARE

AL-IM2-PIE PLUG-IN
EXPANDER MODULE

AL-IM2 SERIES
"VERSION 2"
GATEWAY MODULES

AL-IM2-80211
AL-IME2
AL-IME2POE

DL6500 & ETDLN LOCKS

THE **ALARM LOCK** TRILOGY SERIES STAND-ALONE AND NETWORK PROGRAMMABLE ACCESS CONTROL SYSTEM IS A SERIES OF STATE-OF-THE-ART WIRELESS AND KEYPAD-ENTRY PROGRAMMABLE SECURITY LOCKS.

DL6500
&
ETDLN

DL6500 & ETDLN

The DL6500 and ETDLN mortise locks are designed to allow all features to be programmed either at the keypad or through its radio link to a DL-Windows equipped computer. In addition, Audit Log Data may be transmitted through the radio link back to the DL-Windows computer.

These locks both feature a real-time clock/calendar that automatically adjusts for *Daylight Saving Time* and allows for automated programming of events. Up to 5000 unique user codes can be added to the lock, from 3-6 digits in length.

The DL6500 Series mortise-based lock provides additional hardware security compared with standard cylindrical door locks; the ETDLN Series is also a mortise-based lock, but is used for exit door push bar applications. **Keypad programming is identical for both locks.**

Wireless Network and DL-Windows

If your Networx wireless network is not yet set up, you can add Users and program other features using the DL6500 / ETDLN keypad as a *temporary* convenience to allow the lock to be put into use before installing the wireless network. Be aware that all programming added using the keypad *cannot* be retrieved into DL-Windows, so if you decide to start programming using the lock keypad, we recommend you keep hardcopy records (in a secure location) of all user names and their User Codes that have been programmed. Keeping these hardcopy records will save time because after the wireless network is set up, all programming added via the lock keypad can easily be re-added to DL-Windows and downloaded back to the lock(s).

These instructions include manual keypad programming for the DL6500 and ETDLN. For DL-Windows user instructions, see OI237; for configuring your wireless system, see OI352.

Important Note: The word "credential", used throughout this manual, is a generic word used to describe a User Code, a hardwired Remote Input momentary contact, a Wireless Remote Release, or any future device or design that allows the lock to unlock, allowing passage through the door.

Table of Contents

Lock Features 3
Supported Products 4
Lock Design Overview 5
Terminology Used in this Manual 6
Programming Levels 8
Conventions Used in this Manual 9
LED and Sounder Indicators 9
Wiring and Power Up 10
Quick Start 11
Testing the Codes Entered 13
Programming Functions Overview 14
Programming Functions 15-27
Groups and Scheduled Group 1 Examples ... 28-29
Programming Record Sheet 30
User Code Record Sheet 31
Schedule Record Sheet 33
Glossary 35-36
Warranty 36

Lock Features

Audit Trail

- 40,000 Event Capacity*
- Entries Logged with Time and Date
- Critical Programming Events Logged
- Uploadable using Alarm Lock's DL-Windows software

Lock Features

- Metal Key Override for all cylindrical locks
- Keypad Lockout (see page 26, Functions 60-61)
- Non-Volatile (Fixed) Memory
- Real-Time Clock (within one second accuracy) (see page 24, Functions 43-44)
- Programmable Internal Relay (see pages 27-28)
- Visual and Audible Keypad Feedback (see page 10)
- Battery Status Monitor (see page 14)

Scheduling

- 500 Scheduled Events (see pages 29-32)
- Automated Unlock/Lock
- Enable/Disable Users (see page 20, Function 3)
- Enable/Disable Groups (see page 21)
- Four "Quick Schedules" (contains 4 most common schedules) (see page 30)
- Real-time clock and calendar (see page 24)
- Programmable Timeout Functions (see page 20-22)

User Access Methods

- Keypad Entered User Codes (see page 19)

User Features

- 5000 Users (see page 19)
- 5 Pre-defined Administration User Levels including *Master*, *Installer*, *Manager*, *Supervisor* and *Basic* User Codes (see page 9)
- User Code Lengths from 3-6 digits
- Service Code ("One-Time-Only" Code) (see page 8)
- User Lockout Mode (see page 20, Function 6)
- Users Assignable to 4 Groups (see page 33)
- *Ambush* Function (see page 26, Function 66)
- Guard Tour Code (see page 8)
- Emergency Commands (see page 8)
- Emergency Lockdown / Passage activated from Wireless Remote Release transmitters, DL-Windows or initiated from another Networx lock in the system (see "How do the Emergency Commands work?" on page 8)

Computer Programming

- Full Administrative programming from a PC using Alarm Lock's DL-Windows Software. For a description of all features, see the *DL-Windows User's Guide* (OI382) and the *DL-Windows for Networx User's Guide* (OI383)
- **Networked mode**: PC running DL-Windows is connected to (wirelessly or wired) a network, either using an Ethernet or 802.11 connection. Communications are accomplished through networked Gateway module(s). See page 4 and 5 for supported products.
- **Non-networked mode**: PC running DL-Windows does not require a network. Communications are accomplished using an **AL-IME-USB** Gateway inserted into a USB port on your Windows laptop or PC. **Note:** Only "Local" Emergency Commands are supported when using an **AL-IME-USB** Gateway. See page 4 and 5 for supported products.
- Wireless programming range: Up to 200 feet, depending on building construction materials (see page 2).

Trilogy® is a registered trademark of Alarm Lock. Microsoft® and Windows® are trademarks of their the Microsoft Corporation.

Supported Products and Applications

AL-IM2-80211
AL-IME2
AL-IME2POE

AL-IM2 SERIES WI-FI Gateway Modules
A Networx series door lock contains a radio that transmits and receives data--via a private wireless signal--to an intermediate device called a Gateway module. In turn, this Gateway module is connected (either wirelessly or wired) to a computer network such as a LAN or corporate Intranet. A Windows PC connected to this network can control and program all Networx series door locks by the use of the *DL-Windows* software (see OI382 and OI383). With access rights to the software, one computer--or several--can control the software and consequently can control the devices in the system. **Note:** See below for an explanation of "VERSION 2". Several Gateway device models are available:

- **"Wireless / Wired" AL-IM2-80211** Hardwired / Wireless Gateway Interface Module. Supplied with its own class 2 transformer to supply power and supports connection to a network either using 802.11 or a standard Ethernet cable. This "Wireless / Wired" Gateway module has two antennas, one for the proprietary radio connection to the Networx series door lock and the other for 802.11 network transmissions. Ensure adequate 802.11 coverage in the area where the "Wireless / Wired" Gateway is mounted. Supports up to 63 Networx locks. Ceiling- or wall-mountable.

- **"Wired" AL-IME2** Hardwired Gateway Interface Module, supports up to 63 Networx Locks, connects directly to a network using a standard RJ-45 Ethernet cable. This model has one antenna used to transmit to the Networx series door lock via an Alarm Lock proprietary radio connection. Ceiling- or wall-mountable. Powered with Class 2, 6VAC transformer (supplied).

- **"Power over Ethernet" AL-IME2POE** Hardwired Gateway Interface Module + POE (Power Over Ethernet), supports up to 63 Networx Locks, connects directly to a network using a standard RJ-45 Ethernet cable and POE. This model has one antenna used to transmit to the Networx series door lock via an Alarm Lock proprietary radio connection. Ceiling- or wall-mountable.

AL-IME-USB

- **AL-IME-USB** - USB Portable Gateway Interface Module, virtually the same functionality of the Gateways listed above, however this highly portable and compact module connects to a standard USB 2.0 socket or greater in your Windows laptop or PC, quickly and effortlessly creating a wireless connection to your Networx series door locks. Requires DL -Windows v5.3.2 or higher. **Note:** Only "Local" Emergency Commands are supported when using an **AL-IME-USB** Gateway.

DL-Windows Software Application
Alarm Lock Trilogy Microsoft Windows-based software application, v4.0 or higher, supports Trilogy Networx and Trilogy stand alone locks, with single database (PDL6500 / ETPDLN series door locks require v5.2 or higher). For use with *Free of charge* and downloadable online at **www.alarmlock.com**. ***DL-Windows software is the basis for the wireless lock programming interface.*** For those unfamiliar with using DL-Windows software, stop here and review the DL-Windows User's Guide (OI382) and the DL-Windows for Networx User's Guide (OI383).

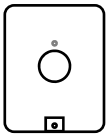

RR-1BUTTON

RR-4BKEYFOB

RR-1BUTTON and RR-4BKEYFOB
The PDL6500 / ETPDLN series door locks are compatible with the **RR-1BUTTON** *Wireless Remote Release Button* (see WI1999) and **RR-4BKEYFOB** *Wireless Remote Release Keyfob* (see WI2004). Both the PDL6500 and ETPDLN can wirelessly unlock all Networx™ series door locks. The **RR-4BKEYFOB** is a portable pocket-size remote release, and the 1-button **RR-1BUTTON** is intended for fixed mounting at a hidden location. Each requires one battery (service life of up to 12,000 openings). During normal operation, the lock typically opens within 2 seconds of the button press.

Supported Products and Applications (cont'd)

AL-IM2-EXP

AL-IME2-PIE

The Networx™ **AL-IME2-EXP** *Expanders* extend the coverage area of **AL-IME2** series Gateways, allowing control of up to its rated maximum of 63 Networx locks per Gateway. Installation is simple, as Expanders only require a connection to 12VDC power supply. **AL-IME2-EXP** Expanders are cost-effective, easier to wire than conventional Gateways, and feature a simplified 'Plug and Play' setup where the Networx system automatically identifies all newly powered Expanders and quickly determines the best wireless signal pathways. Up to 7 Expanders can be added to one **AL-IME2** series Gateway. The easy to install **AL-IME2-PIE** *Plug-In Expander* can simply be powered by any ordinary 120VAC wall outlet. See OI391 for more information.

SITE SURVEY TOOLS

The **AL-NSM** *Networx Signal Meter* and the **AL-NSG** *Networx Signal Generator* greatly assist with identifying optimal Gateway locations for the anticipated installation doors. See WI2092 for complete information, but a general description follows:

AL-NSM
Signal Meter

AL-NSM *Networx Signal Meter*

Performs a site survey test of the premises to:

- find the optimum location for Gateways relative to locks
- find the optimum location for locks relative to Gateways
- determine the optimum number of Gateways required to cover the signal area of the locks you plan to install
- perform diagnostic testing of existing Gateway radio signals within your installation environment

Using the various available Modes, the **AL-NSM** can measure radio noise levels, calculate overall signal quality, discover Networx locks not yet assigned to Gateways, and even send a "locate" signal (causing all unassigned locks to "beep").

The **AL-NSM** can be used with an existing Gateway and the "Gateway Signal Test Mode" feature in DL-Windows, or with the **AL-NSG** ***Networx Signal Generator*** explained below. **Note:** See the "Gateway Signal Test Mode" feature in the ***DL-WINDOWS for Networx V5 User's Guide*** (OI383).

AL-NSG Signal Generator

AL-NSG *Networx Signal Generator*

As mentioned above, the **AL-NSM** ***Signal Meter*** may be used with either an existing operational Gateway or the portable **AL-NSG** ***Networx Signal Generator***. The **AL-NSG** is a portable battery-powered Gateway simulation device that generates continuous Gateway radio signals to an **AL-NSM**.

Depending on how you use the **AL-NSG**, the **AL-NSG** can be placed in the proposed location for a Gateway or in the proposed location of a lock, to determine the acceptability and the dependability of the radio signal coverage. The **AL-NSG** can be mounted using the inert nylon lanyard or reusable adhesive mounting putty (supplied with the **AL-NSG**).

"VERSION 2" CONSIDERATIONS

The **AL-IME2-EXP** "version 2" Expanders (notice the "**2**" in the model name) are the next generation of Networx wireless devices (all **AL-IME2-EXP**s are version 2). Because **AL-IME2-EXP** Expanders *only* work with **AL-IME2** version 2 Gateways, an **AL-IME2** version 2 Gateway must be installed and operational in your system for **AL-IME2-EXP** Expanders to function (**AL-IME2-EXP** Expanders cannot communicate with older "non-version 2" Gateways).

Note: Although the version 2 **AL-IME2** Gateways and **AL-IME2-EXP** Expanders CAN be mixed into an existing system that includes older "non-version 2" Gateways, *at least one new **AL-IME2** Gateway must be up and running before an **AL-IME2-EXP** Expander will function*. Compared with the original "version 1" Gateways. the "version 2" Gateways have a different enclosure design, the operation and colors of the LEDs are different, and the location of the hidden Ethernet socket is through the rear mounting plate. **Important: DL-Windows version 5.3.2** or later is required to support version 2 Gateways and Expanders. **Note:** The **AL-IME2-POE** Gateway is compatible with Alarm Lock and Continental Access products. Refer to the documentation supplied with your software for integration details.

Lock Design Overview

Why use User Codes?

With ordinary door locks, the need to make physical copies of metal keys and distributing them can be a huge organizational and financial task -- and what will you do if someone causes a security breach by accidentally losing their key?

The answer lies in the advantage of "firmware". The firmware inside the DL6500 / ETDLN can be programmed (and re-programmed again and again) to suit your changing requirements. No more metal keys to distribute...instead, distribute *User Codes* -- and delete them from the firmware when needed. A *User Code* is the firmware equivalent of a metal key--it is a series of numeric button-presses at the DL6500 / ETDLN keypad to allow (for example) passage through a door.

Preparing to Program User Codes

The DL6500 / ETDLN keypad contains 12 buttons, numbers 1 through 9 plus zero, a star button (*) and a special "AL" button (L). You can use the DL6500 / ETDLN keypad to program your system, or you can use a computer program called DL-Windows that can be configured to program your system wirelessly. This guide will show you how to program your DL6500 / ETDLN using the keypad, without DL-Windows. (For more information about DL-Windows, see User Guides OI237; for information about using DL-Windows within the Networx wireless system, see OI352).

Before you can program your DL6500 / ETDLN using the keypad, you must first enter something called "Program Mode".

What is Program Mode?

The software has only two "modes"--"Normal Mode" and "Program Mode". When you want to make changes to the lock program, you enter "Program Mode". When you finish programming and wish to put the lock into use, you exit "Program Mode" to enter "Normal Mode".

You can enter Program Mode using the keypad by pressing the *Master Code* of the lock that was set at the factory (then wait for the green light and press L until multiple beeps are heard). The Master Code is basically a secret 6-digit "passcode" that allows you to enter Program Mode. But since all locks are identical and leave the factory with the same Master Code, this factory Master Code is therefore not very secret--and should be changed to your own personal Master Code. This way, only YOU can enter Program Mode and make changes to the lock programming.

Once the new Master Code is set , then you can continue with the *Quick Start* procedure and set the weekday, date and time. After this, you can start entering User Codes for people to use. All changes to the lock are organized by their Function Number. Want to change the date? Use Function Number 38. Want to add a User Code? Use Function Number 2. There are 99 Functions in total, some that you will use often, and others that you may never need.

Notice that when you program your lock, programming tends to follow a consistent 5-step pattern: (1) Enter Program Mode (2) Press L followed by the Function # (3) Press L and enter data (4) Press * to end (5) Exit Program Mode to put the lock into use.

Turn the page and learn about the special terminology used with your lock. Once that is clear, use the Quick Start procedure on page 15 to help you get up and running.

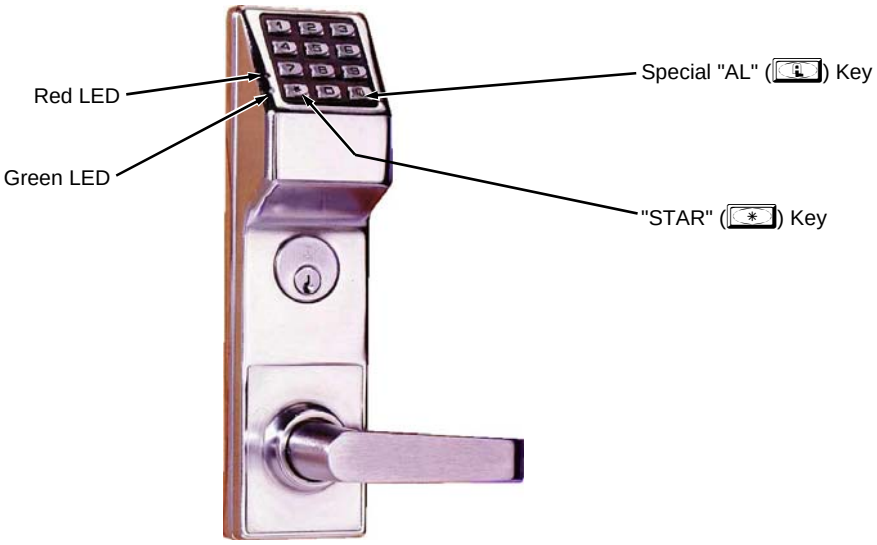

Terminology Used in this Manual

What is a *Lock Program*?

A Lock Program contains the instructions that the lock uses to perform its various functions. You can also use DL-Windows (defined below) to create a Lock Program on your computer, and then transfer and store the Program in the circuitry contained inside the lock itself. The Lock Program is essentially a computer database file that maintains feature settings, schedules, audit trails, etc. Using DL-Windows, a Lock Program (called a "Lock Profile" in DL-Windows) can be created with default information, edited on your PC, and then sent to (and even received from) the lock. The **Lock Program** consists of 4 areas: **User Codes**, **Features**, **Time Zones**, and **Schedules**, all defined below:

What are *User Codes*?

Also called *User Access Codes* or *PIN No. Codes*, User Codes are numbers the User enters into the lock keypad to unlock the lock. The User Codes are part of the Lock Program, and the Lock Program is stored in the lock circuitry awaiting the Users to key in their User Codes.

What are *Features*?

Your lock is designed to support many options and functions. Using the keypad or DL-Windows software, you can select the features you wish to activate, such as if the lock will automatically adjust for Daylight Saving Time in the spring and autumn, or if the lock sounder should be disabled or enabled.

What is a *TimeZone*?

Events (recorded lock activities) can be programmed to occur at certain times. It is these times (for example, “every Tuesday at 5PM”) that are referred to as *TimeZones*. TimeZones can be created manually through the keypad. In DL-Windows, you can use the **Schedule-TimeZone** screen to create these TimeZones, and once created, you can link events to these TimeZones.

What is a *Schedule*?

Your lock can be programmed to maintain a schedule in which certain events can occur automatically. For example, you can program the lock to allow Groups of Users (with their User Codes) access ONLY during specific business hours. With another example, you can program another lock to UNLOCK at 9AM, LOCK at noon for lunch, UNLOCK at 1PM, and LOCK again at 5PM--every weekday. As you can see, many different combinations of Schedules can be created to suit the needs of the Users. First you create *TimeZones* (see above). Next you create events and link them to your TimeZones (also using the **Schedule-TimeZone** screen in DL-Windows). When finished, you can view (in DL-Windows) your schedule in the **Schedule View** screen.

What is a *User*?

A User is a person who is authorized to operate or make certain programming changes to the lock. This User can be anyone--from a one-time visitor (who will almost certainly have no authority to make programming changes) to the owner of the building in which the lock is installed (who may wish to have total authority to make changes). The DL6500 / ETDLN Series locks can hold up to 5000 Users (each with their own User Code) in its programming memory, and each User possesses a pre-defined level of authority--a **Programming Level**--as to their ability to use or make changes to the lock.

What is a *Programming Level*?

The Programming Level defines the range of programming tasks a User is allowed to perform. The higher the Level, the more programming tasks the User is allowed (with Master allowing ALL tasks).

Note: Since the Programming Level is closely associated with the type of User and their abilities, a User who holds a certain Programming Level is sometimes referred to by their “**User Type**”.

For example, DL6500 / ETDLN Series locks can hold up to 5000 Users in its programming memory, and each User is associated with a User Number (see definition of "User Number" below) and therefore a specific Programming Level, as follows:

Master: Always associated with User Number 1. Is always enabled and can program all functions. (Abbreviated as Programming Level = M).

Installer: Always associated with User Numbers 2 and 3. Can program all functions except changing the Master Code. (Abbreviated as Programming Level = 4).

Manager: Always associated with User Numbers 4, 5, and 6. Can program all functions except functions relating to lock configuration. (Abbreviated as Programming Level = 3).

Supervisor: Always associated with User Numbers 7, 8 and 9. Can only program functions relating to day to day operation. (Abbreviated as Programming Level = 2).

Print Only Users: In previous versions of the ALARM LOCK Trilogy series locks, *Print Only Users* were always associated with User Numbers 10 & 11 and were restricted to printing event logs only, using a special AL-IR1 handheld printer. With the DL6500 / ETDLN Series locks no longer requiring (or allowing) the use of this AL-IR1 printer, *Print Only Users* are also no longer required. Although the attributes of User Numbers 10 and 11 have been changed to replicate those of "Basic Users", to ensure compatibility with previous lock models we do NOT recommend the use of User Numbers 10 and 11.

Basic Users: Always associated with User Number 12 and higher (except 297-300). No programming ability allowed. Most Users are *Basic Users*, who are given their own personal User Codes and are only allowed to simply unlock the lock when desired.

Programming Levels are hierarchical--higher levels are allowed to do anything the levels below them can do. For example, if you are a *Manager*, you are allowed to do anything that *Supervisors* and *Basic Users* can do in addition to those tasks allowed for Managers (Level 3).

What is the *Minimum Required Program Level*?

This Programming Level abbreviation is the *minimum* programming level required to access the particular Function. (The higher the level number, the more programming tasks the User is allowed, with Master allowing all tasks).

In this manual, Programming Levels are abbreviated as follows: **M** = Master, **4** = Installer, **3** = Manager, **2** = Supervisor.

All other Levels are hierarchical, with higher levels being allowed to do anything the levels below them can do. Therefore Level 4 is "higher" than level 3. See the chart on page 9.

What is a *User Number*?

(*User Number = Location Number = User Location = Slot in Lock*)

User Numbers are used and are significant within each individual lock only. The User Number determines the Programming Level for each User. For example, DL6500 / ETDLN Series locks can hold up to 5000 Users in its programming memory. This memory can be thought of as simply a numbered list from 1 through 5000. Each entry in the list is represented by a User Number. Therefore,

Terminology Used in this Manual (cont'd)

where a User is located in this list--their *User Location*--is a commonly used description of their User Number. Because of their similarities, a *User Number*, *User Location* and *Location Number* can be used interchangeably. In some DL-Windows screens, the word "Slot" is also used. They all mean the same thing.

Since User Numbers are fixed, knowing a User Number will specify the associated Programming Level, and will in turn indicate a User's programming abilities. For example, User Number 1 is always the Master, who can perform all programming tasks.

Programming Levels are hierarchical--higher levels are allowed to do anything the levels below them can do. For example, if you are User 2, you are allowed to do anything that Users 3 through 11 can do.

What is a *Group*?

With many lock applications, it is convenient for large numbers of similar Users to be grouped together. Placing Users into Groups (by assigning them specific User Numbers) allows large numbers of Users to be controlled all at once rather than individually--saving time and effort. Groups are controlled via schedules, and a typical example involves enabling or disabling a Group at a certain time. Default Group associations are specified in the table on page 9. For example, if you wish to add a User to Group 1, assign this User a User Number between 51 and 100. These default Group associations can be changed if needed to allow Groups larger than the default number of 50 (by using keypad Function 35). (See page 21 for some Group function examples).

What is *DL-Windows*?

DL-Windows is a computer program that allows you to program your ALARM LOCK Security Lock. You do not need DL-Windows to program your lock, but it makes programming much faster and easier. With DL-Windows, you can quickly create Lock Programs (programs that make the lock perform its many functions) add multiple Users (who have access), retrieve event logs, and create Schedules. The benefit of DL-Windows is that it allows you to set up all lock programming in advance (on your computer), and then later send the information to the locks at your convenience.
DL-Windows version 4.0.1 software (or later) allows you to upload and download programming features ***wirelessly*** using the Trilogy Networx™ series door locks and a computer network. See OI352 for more information.

How do the Emergency Commands work?

For use with all locks enrolled into the Trilogy Networx™ radio network, these wireless commands can be sent to all locks in an Account during a crisis or other urgent situation.
By default, Administrative Users (Users 1-11) can send an Emergency command. In addition, any User Code can be programmed to allow the use of these Emergency Commands by simply adding that User Code to an "Emergency Users" list within DL-Windows. When an enabled User Code is pressed at a lock keypad, first the lock unlocks, then the lock permits the use of these emergency commands to be sent to all locks in the network, as follows:

- ...press **911** to issue "**Emergency Lockdown**", to indefinitely lock all doors;
- ...press **000** to issue "**Emergency Passage**", to indefinitely unlock all doors;
- ...press **123** to issue "**Return to Normal**" returning all doors to "normal" (non-emergency) operation.

In addition, emergency commands may be sent via an RR-4BKEYFOB. **Note:** 3 chirps sound after each emergency command entry. See the DL-Windows user guide OI383, "Emergency Lock Down" for more information. **Note:** DL-Windows does not need to be running to allow these "Emergency" commands to be initiated; **any** wireless lock keypad can be used to disseminate these commands throughout the system.

Who are *Users 297-300*?

Users assigned to User Numbers 297, 298, 299 and 300 have special abilities, as follows:

User 297: *Quick Enable User 300*

User 297 possesses the unique ability to enable the User Code associated with User 300. User 297 does this by first entering their own *User 297 User Code* into the lock keypad. When User 300 subsequently enters their *User 300 User Code*, the lock allows access (for one time) and then the *User 300 User Code* becomes disabled.

For example, you wish to allow one-time access to a temporary worker. Simply enter the *User 297 User Code* into the lock keypad. Later, when the temporary worker enters the *User 300 User Code* into the lock keypad, the *User 300 User Code* allows access (for one time only) and then becomes disabled. Later, if you wish to grant the temporary worker re-access, simply re-enter the *User 297 User Code* and the *User 300 User Code* will be re-enabled (again for one time only). **Note:** From the factory, the User 300 User Code is blank; when the User 300 User Code is added, it is automatically enabled by default. In addition, each time Features or Users are uploaded to the lock, the User 300 User Code is re-enabled in ALL the locks in the Account.

User *298: Reserved*

In previous versions of the ALARM LOCK Trilogy series locks, User Number 298 initiated the sending of data to or from the lock, and a special "AL-PCI" cable was used to physically connect the lock to a PC running DL-Windows. With the DL6500 / ETDLN Series wireless locks no longer requiring a wired connection, User Number 298 is also no longer required and has been removed as an active code. Note that the User 298 code does provide a "Guard Tour" type function (logging the code entry with a time and date stamp in the Event Log / Audit Trail), but to ensure compatibility with previous lock model versions, the use of User 298 is not recommended. **Note:** User 298 is not an access code (it is a "non-pass" code) and therefore does not allow passage through the door. See "**User 299: *Guard Tour Code***" below.

User 299: *Guard Tour Code*

A *Guard Tour Code* is used to log the movement of a security guard as he or she makes rounds from one assigned guard tour station to the next. Entering the User 299 code provides precise verification and accountability of a guard's movement by logging the location with a time and date stamp in the Event Log (Audit Trail).
Note: User 299 is not an access code (it is a "non-pass" code) and therefore does not allow the security guard to pass through the door.

User 300: *One-Time Only Service Code*

This is a *One-Time Only Service User Code* enabled by User 297. For example, User Code 300 is sometimes used for guard tour duties. See *User 297: Quick Enable User 300* above.

Programming Levels

The Programming Level defines the range of programming tasks a User is allowed to perform. The higher the Level, the more programming tasks the User is allowed (with Master allowing ALL tasks).

Note: Since the Programming Level is closely associated with the type of User and their abilities, a User who holds a certain Programming Level is sometimes referred to by their "**User Type**".

For example, DL6500 / ETDLN Series locks can hold up to 5000 Users in its programming memory, and each User is associated with a User Number (see definition of "User Number" in the previous "Terminology" section) and therefore a specific Programming Level, as follows:

Master: Always associated with User number 1. Is always enabled and can program all functions. (Abbreviated as Programming Level = M).

Installer: Always associated with Users 2 and 3. Can program all functions except changing the Master Code. (Abbreviated as Programming Level = 4).

Manager: Always associated with Users 4, 5, and 6. Can program all functions except functions relating to lock configuration. (Abbreviated as Programming Level = 3).

Supervisor: Always associated with Users 7, 8 and 9. Can only program functions relating to day to day operation. (Abbreviated as Programming Level = 2).

Print Only Users: In previous versions of the ALARM LOCK Trilogy series locks, *Print Only Users* were always associated with User Numbers 10 & 11 and were restricted to printing event logs only, using a special AL-IR1 handheld printer. With the DL6500 / ETDLN Series locks no longer requiring (or allowing) the use of this AL-IR1 printer, *Print Only Users* are also no longer required. Although the attributes of User Numbers 10 and 11 have been changed to replicate those of "Basic Users", to ensure compatibility with previous lock models we do NOT recommend the use of User Numbers 10 and 11.

Basic Users: Always associated with User number 12 and higher (except 297-300). No programming ability allowed.

Programming Levels are hierarchical--higher levels are allowed to do anything the levels below them can do. For example, if you are a *Manager*, you are allowed to do anything that *Supervisors* and *Basic Users* can do in addition to those tasks allowed for Managers (Level 3).

Lock Defaults for DL6500 / ETDLN Series locks

Users added will default to a Group Association and a Programming Level ability as follows:

USER TYPE	USER NUMBER	GROUP DEFAULT ASSOCIATION	MINIMUM PROGRAM LEVEL (See page 7)
Master Code	1	-	M
Installer Codes	2 & 3	none	4
Manager Codes	4 - 6	none	3
Supervisor Codes	7 - 9	none	2
(Reserved--see above)	10 - 11	none	--
Basic User Codes	12 - 50	none	none
Basic User Codes Group 1	51 - 100	1	none
Basic User Codes Group 2	101 - 150	2	none
Basic User Codes Group 3	151 - 200	3	none
Basic User Codes Group 4	201 - 250	4	none
Basic User Codes	251 - 296	none	none
Quick Enable User 300 Code	297	none	none
(Reserved--see page 8)	298	none	none
Guard Tour Code*	299	none	none
Service Code	300	none	none
Basic User Codes	301-5000	none	none

*This code is a *Non-Pass* code and therefore does not allow passage through the door.

Conventions Used in this Manual

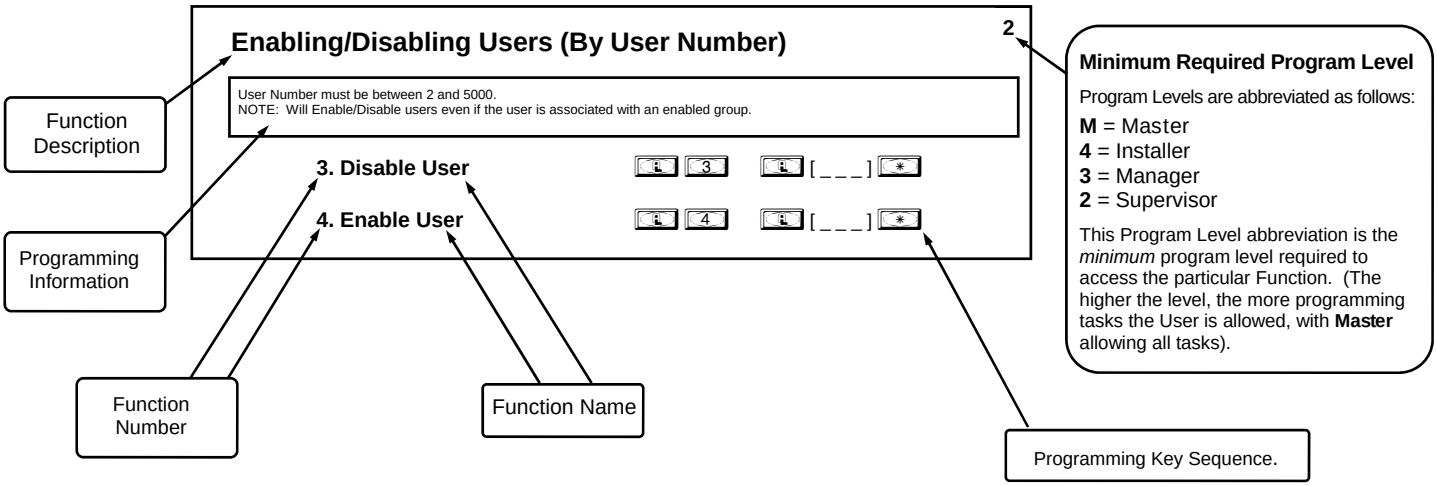

General Program Mode Information

If a wrong key is pressed during code entry, press the key until the error sound is heard (7 short beeps), this will clear the entry. Re-enter the key sequence again.
All program sequences are followed by the key; 2 short beeps indicate a successful program sequence.

LED and Sounder Indicators

The DL6500 / ETDLN Series locks provide visual and audible keypad feedback. With a fully charged battery, the LED and sounder feedback is as follows:

ACTIVITY	LED	SOUNDER	COMMENTS
Keypress	1 Red Flash	1 Beep	Normal Operation
Access Granted or Remote Release	2 Green Flashes	2 Beeps	Remote release enabled through activation of relay
Invalid Code	7 Red Flashes	7 Beeps	Re-enter User Code
Successful Program Entry	2 Green Flashes	2 Beeps	When in Program Mode
Unsuccessful Program Entry	7 Red Flashes	7 Beeps	When in Program Mode
Exit Program Mode	1 Red , 2 Green Flashes	10 Beeps	
Valid but Disabled Code	1 Green , 4 Red Flashes	1 long, 5 short beeps	Code exists in memory, but disabled
Emergency Commands are in effect	1 Red Flash every two seconds	--	--
Low Battery	Red LED and Sounder turn on steady for the duration of the Pass Time		See page 14 before changing batteries. See Functions 52-54 for the definition of "Pass Time".

Emergency Commands

Emergency Commands

The PDL6500 and ETPDLN series locks can be programmed to send and/or respond to Emergency Commands ("**Emergency Lockdown**", "**Emergency Passage**" and "**Return to Normal**"). Emergency Commands can be initiated directly from the lock's keypad, initiated from an RR-4BKEYFOB *Wireless Remote Release* or initiated from the Networx server running DL-Windows. (**Note:** "**Emergency Passage**" is not available with the *Wireless Remote Release*). Emergency Commands are available in two types: "**Global**" or "**Local**".

- With "**Global Emergency Commands**", activating the Emergency Command changes the state of all locks in the entire system.
- With "**Local Emergency Commands**", only the lock that initiates the Emergency Command will change state; activating the Emergency Command does NOT change the state of all locks in the entire system.

For more information about how Emergency Commands work with your ENTIRE system, see the *DL-Windows for Networx User's Guide* (OI383).

Understanding "Global" vs. "Local"

The following features should be understood before using **Emergency Commands** with your lock. Below describes the various features available for **Global Emergency Commands** or **Local Emergency Commands**, or combinations of both.

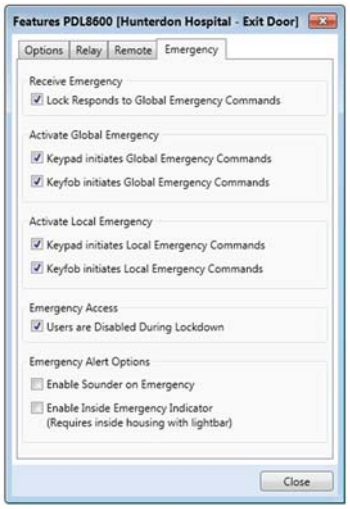

TIP: If using an RR-4BKEYFOB *Wireless Remote Release*, before reading this page, we recommend that you read the documentation that came with it, and also the "**Wireless Remote Releases**" section on page 13.

Receiving Emergency Commands

Lock Responds to Global Emergency Commands

- **When enabled:** The lock **WILL** accept and adhere to Emergency Commands that disseminate from another lock or from DL-Windows. **Note:** This feature does not need to be enabled (checked) for the lock to accept commands from an RR-4BKEYFOB *Wireless Remote Release*.
- **When disabled:** The lock **WILL NOT** accept nor adhere to Emergency Commands that disseminate from another lock or from DL-Windows. ***CAUTION:*** *Disabling (un-checking) this feature could be of great consequence for the safe administration of your Networx system.*

Activating Global Emergency Commands

Keypad initiates Global Emergency Commands: When enabled (checked), if an Emergency Command is initiated from the keypad, the lock will first inform the Gateway to broadcast the Emergency Command to all locks assigned to the same "**Gateway Group**", **then** the lock will respond to that Emergency Command accordingly (if the above "**Lock Responds to Global Emergency Commands**" is enabled).

Keyfob initiates Global Emergency Commands: When enabled (checked), if an Emergency Command is initiated from an RR-4BKEYFOB *Wireless Remote Release*, the "paired" lock will first inform the Gateway to broadcast the Emergency Command to all locks assigned to the same "**Gateway Group**", **then** the paired lock will respond to that Emergency Command accordingly (if the above "**Lock Responds to Global Emergency Commands**" is enabled).
Note: See OI383 for more information about Gateway Emergency Groups.

Activating Local Emergency Commands

Keypad initiates Local Emergency Commands: When enabled (checked), if an Emergency Command is initiated from the keypad, the lock will immediately change state accordingly. The Emergency Command will NOT be sent to the Gateway and therefore will NOT be sent to other locks in the system.

Keyfob initiates Local Emergency Commands: When enabled (checked), if an Emergency Command is initiated from an RR-4BKEYFOB *Wireless Remote Release*, the paired lock will immediately change state accordingly. The Emergency Command will NOT be sent to the Gateway and therefore will NOT be sent to other locks in the system.

TIP: Combining Global and Local Features: You can combine the various Global and Local Emergency fea-

Emergency Commands (cont'd)

tures to customize your system.

Example #1: DL-Windows by default enables (checks) all of the features, as shown above in the **Features** dialog. What will happen when all features are enabled and an "**Emergency Lockdown**" command is initiated at the keypad? Because the **Activate Local Emergency** commands are enabled, the lock that initiates the Emergency Command will lock, then this lock will inform the Gateway to broadcast the Emergency Command to all locks assigned to the same "**Gateway Group**".

Example #2: This example is known as the "pull station option", where one of the **Activate Global Emergency** commands is checked, none of the **Activating Local Emergency** commands are checked, and the "**Lock Responds to Global Emergency Commands**" is unchecked. If an "**Emergency Lockdown**" command is initiated at a lock keypad, the lock will first inform the Gateway to broadcast the Emergency Command to all locks assigned to the same "**Gateway Group**", then the lock will ignore the broadcast when received.

Emergency Users

Activating Emergency Commands

By default, Administrative Users (Users 1 through 11) automatically have the ability to initiate Emergency Commands from the keypad. In addition, "Basic Users" (Users 12+) may be granted the ability to initiate Emergency Commands from the keypad by adding them as Emergency Users in DL-Windows (for more information about adding Emergency Users in DL-Windows, see OI383). **Note:** All paired Wireless Remote Releases have the ability to initiate Emergency Commands (see page 13 for more information).

When a User Code from an Administrative or Emergency User is pressed at any lock keypad, first the lock unlocks, then the lock permits the use of the following Emergency Commands:

[_ _ _ _]
Administrative or Emergency User Code

...press 9 1 1 to issue "**Emergency Lockdown**"

...press 0 0 0 to issue "**Emergency Passage**"

...press 1 2 3 to issue "**Return to Normal**"

Access During an Emergency

- **When enabled:** If the feature **Users are Disabled During Lockdown** is enabled (checked) for a specific lock, and when the Networx system is in an Emergency Lockdown state, "Basic Users" (Users 12+) are denied the ability to unlock the physical lock (User Codes for these Basic Users are ignored). The User Codes added to Administrative Users (Users 1 through 11) as well as all "Emergency Users" **remain enabled**, retaining the ability to unlock a secured lock.
- **When disabled:** If the feature **Users are Disabled During Lockdown** is disabled (unchecked) for a specific lock, and when the Networx system is in an Emergency Lockdown state, ANY valid User Code that exists in the lock's internal memory will be allowed to unlock the secured lock, regardless of User Number.

Emergency Alert Options

Sounder

If **Enable Sounder on Emergency** is enabled (checked), upon receiving an Emergency Command, the integral sounder will beep once per second for 30 seconds.

Emergency Indicator

When the feature **Enable Inside Emergency Indicator** is enabled (checked), upon receiving the Emergency Command, the internal relay (where equipped) will activate once per second.

Tip: Only "Local" Emergency Commands are supported when using an **AL-IME-USB** Gateway . See page 4 for Gateway model descriptions.

Wireless Remote Releases

Overview

Two types of "Wireless Remote Release" devices are compatible with the PDL6500 and ETPDLN: The RR-1BUTTON *Wireless Remote Release Button* (see WI1999) and RR-4BKEYFOB *Wireless Remote Release Keyfob* (see WI2004). Whether the Wireless Remote Release contains a single button (RR-1BUTTON) or four buttons (RR-4BKEYFOB), each button can be "paired" (connected) with one lock. This means, for example, the four buttons on the RR-4BKEYFOB can each be paired with four separate locks. In addition, each individual lock contains ten (10) "slots" ("User Numbers"), and each "slot" is available to accommodate one paired Wireless Remote Release button. Therefore, each individual door lock can ultimately be paired with up to ten Wireless Remote Release buttons on multiple Wireless Remote Release devices.

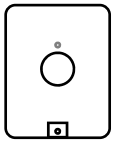

RR-1BUTTON

RR-4BKEYFOB

Note: Since each button can ONLY be paired with one specific lock at a time, when a previously paired button is later paired with a second lock, the first pairing is erased.

Before you "pair" (connect) your Wireless Remote Release buttons, be sure to consider the following:

- Wireless Remote Releases can be paired before a lock is enrolled into a Networx system. However, to allow for lock discovery, the lock must be defaulted and re-initialized (see **ERASE ALL PROGRAMMING** on page 14), *clearing all previously programmed Users and/or paired Wireless Remote Releases*.

Pairing Wireless Remote Release Buttons

Refer to the programming instructions included with the model RR-1BUTTON *Wireless Remote Release Button* (see WI1999) and/or the model RR-4BKEYFOB *Wireless Remote Release Keyfob* (see WI2004).

Emergency Lockdown (via Wireless Remote Release)

The PDL6500 and ETPDLN locks have the added ability to accept Emergency Lockdown commands from a Wireless Remote Release (model RR-4BKEYFOB only). Using the RR-4BKEYFOB, when buttons 3 and 4 are pressed simultaneously, within seconds an Emergency Lockdown command is sent to all locks to which the RR-4BKEYFOB is currently paired (up to 4). Conversely, pressing buttons 1 and 2 simultaneously will send a Return to Normal command, returning the paired locks back to the state they were in prior to receiving the Emergency Lockdown command.

See page 11 for the two different modes (see the section **Understanding "Global" vs. "Local"**) to which the lock will respond when an Emergency Command is sent from a Wireless Remote Release.

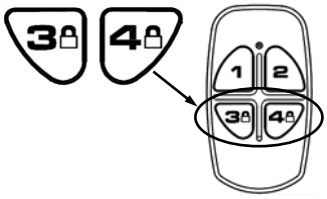

RR-4BKEYFOB

Wiring and Power Up

WIRING

See the Installation Manual for more information.

Batteries:

Use only four 1.5 volt Alkaline size-C batteries or an Alarm Lock pre-wired battery pack assembly.

External Power:

Red / Black wires - External 7.5 VDC Power Source must be used for operation without batteries.

Hardwired Remote Input:

White / White wires - Wire a Normally Open Contact to wires (white and white). Momentarily close to allow person to pass through door. **NOTE: Remote Input is enabled from the factory.** (See page 26)

Relay:

COM-Orange / NO-Green / NC-Yellow - See Function 67 for programming options for the Relay.

Wiring to Disarm a Burglary Control Panel

Burglary Control Panel wiring. See page 31.

POWER UP

FIRST TIME

- **When applying power to the lock for the first time**, stop and follow the procedure outlined in "Quick Start, First time Power Up" further in this manual.

POWER RE-APPLIED

- **When power is re-applied to a lock that was already operational**, proceed as follows:

1. Disconnect battery pack connector.
2. With battery power disconnected, press **and hold down** for 10 seconds to insure discharge of all capacitors.
3. Re-connect battery pack (lock will sound 3 short beeps). If beeps are not heard, then restart at step 1.
4. **Do not press any keys for 15 seconds**.
5. After 15 seconds, the LED will flash red 6 times and 6 beeps will sound.

The lock is now ready for use. The pre-existing program is loaded from fixed memory. Set the clock using functions 38, 39 and 40.

ERASE ALL PROGRAMMING

(The "out of box" factory default will be loaded)

1. Remove the battery pack.
2. With battery power disconnected, press **and hold down** for 10 seconds to ensure discharge of all capacitors.
3. Re-install the battery pack (lock will sound 3 short beeps). If beeps are not heard, then restart at step 1.
4. Within 5 seconds after hearing the 3 short beeps, press and hold until the lock begins to beep, then release.
5. A series of 5 RED LED and 5 beeps will be heard followed by 10 seconds of silence, then 3 GREEN LEDs and 3 fast beeps.

All settings and programming have been erased and the lock is now ready for use. **Note:** All lock programming can also be erased (without need to disconnect the batteries) by entering Function 99.

BATTERY REPLACEMENT

When a valid code is entered and the batteries are weak, the red LED will light when the keys are pressed and the sounder will sound steady for the duration of the Pass Time. For models with a replacable battery pack, use four (4) C-size 1.5 volt alkaline batteries. For models with a sealed battery pack, contact your Alarm Lock dealer for a replacement battery pack. Always replace weak batteries as soon as possible.

CAUTION: Do not press any keys while batteries are disconnected or you may erase the real-time clock settings.

1. At the back of the lock, remove the screw at the bottom of the lock housing and remove the cover.
2. Pull out the battery pack and quickly replace all 4 batteries - within 1 minute. For models with the sealed battery pack, simply unplug the old battery pack and plug in the new battery pack.
3. If you **do not** hear the 3 beeps when power is re-applied, all programming and settings have been retained, and the lock is ready for use. Go to step 5.
4. If you **do** hear 3 beeps when power is re-applied, **do not press any keys for 15 seconds**. After the 15 second period, the LED will flash red 6 times and 6 beeps will sound. Reset the clock using functions 38, 39 and 40.
5. Replace the cover and tighten the screw.

Quick Start

First Time Start Up

1. Unpack the lock.
2. With the batteries disconnected, hold down the [L] key for 10 seconds and release.
3. Connect the batteries and listen for 3 beeps. Within 5 seconds of hearing the 3 beeps, press and hold [L] until beeping starts. This will clear the lock of all programmed data. Important: If you do not hear these 3 beeps, you must start over at step 2.
4. Listen for another series of beeps and LED flashes *followed by 10 seconds of silence*. The lock is now ready to program. Failure to follow this exact procedure can result in erratic lock behavior. **Important Note:** When entering any key sequence below, *do not pause more than 25 seconds between any key presses*--otherwise you must start again.

Enter Program Mode and Change Factory Master Code

1. Press the default Master Code: [1] [2] [3] [4] [5] [6].
2. Wait for the green light and press [L] until multiple beeps are heard. You are now in Program Mode.

   Note: The lock will beep every 6 seconds as a reminder that you are in Program Mode.
3. Enter a new personal 6-digit Master Code number by pressing the following keys:

   [L] [1] [L] [new Master Code] [L] [new Master Code] [*] (the second set of digits must be exactly the same).

   (For example, if you want your new Master Code to be "664433". Press:
   [L] [1] [L] [6] [6] [4] [4] [3] [3] [L] [6] [6] [4] [4] [3] [3] [*]).

Now that the Master Code has been changed, there is no need to change it again (unless you want to). Since you are still in Program Mode, you can now proceed directly below and program various functions. **Note:** Programming any Function, such as setting the clock, follows a consistent 5-step pattern: (1) Enter Program Mode (2) Press [L] [Function #] (3) Press [L] and enter data (4) Press [*] to end (5) Exit Program Mode.

Note: There is a 3 minute Program Mode timeout if no keys are pressed when in Program Mode. A steady tone will sound for the final 15 seconds of the 3 minute timeout period as a warning. To remain in Program Mode, press any key.

Set the Weekday

1. Enter Program Mode (if not in already).
2. Press [L] [4] [0] [L] [number of weekday] [*]. (Use 1= Sunday, 7 = Saturday).

   (For example - Friday - press [L] [4] [0] [L] [6] [*]).

Set the Date

1. Enter Program Mode (if not in already).
2. Press [L] [3] [8] [L] [MMDDYY] [*].

   (For example - May 10, 2002 - press [L] [3] [8] [L] [0] [5] [1] [0] [0] [2] [*]).

Set the Time

1. Enter Program Mode (if not in already. If you just finished the above procedure, you are still in Program Mode).
2. Press [L] [3] [9] [L] [HHMM] [*]. (Use 24-hour military format, where PM adds 12 hours).

   (For example - 2:30pm - press [L] [3] [9] [L] [1] [4] [3] [0] [*]).

Enter User Codes

1. Enter Program Mode (if not in already).
2. Press [L] [2] [L] [User Number] [L] [new User Code] [*].

Quick Start (cont'd)

(For example, John Smith is designated as User 21. You want him to use the code of "232323" to unlock the door. Program the lock by pressing: [1] [2] [1] [2] [1] [1] [2] [3] [2] [3] [2] [3] [*]).

3. Repeat step 2 for each new user.

Delete a User Code

1. Enter Program Mode (if not in already).
2. Press [1] [2] [1] [User Number] [*].

   The sounder beeps for 10 seconds with green (and then red) LED flashes. At this point the lock expects a new User Code entry; but do nothing -- simply wait for the beeping to time-out (10 seconds). When beeping stops, the existing User Code data will be erased.
3. Repeat step 2 for each new User.

User Code Conflicts

Care should be taken not to program a new User Code which matches the first digits of any other User Code (only the User Code with the least number of digits will be recognized). **Example:** If User Codes 123 and 123456 are both entered in the system, only code 123 would be recognized, unless the ENTER Key has been enabled (see Function 69, see page 29). In addition, an error will sound if you try to program a new User Code that matches the first digits of the Master Code.

WARNING: When attempting to change an existing Master Code, it is HIGHLY recommended that you enable all Groups (see Function 23 on page 21), exit Program Mode, and enter the new anticipated Master Code to verify that the anticipated sequence does not currently open the lock. If the lock does not open, the anticipated Master Code can be used as the new Master Code; if the lock opens, the anticipated Master Code already exists in the lock (as a User Code), and the anticipated Mater Code should NOT be used. Always repeat this procedure with any new anticipated Master Codes.

Exit Program Mode

Hold Down any key for 3 seconds. Program Mode exit is confirmed by several beeps. You are now in normal operation.

Re-enter Program Mode

If you wish to re-enter Program Mode, key-in your new 6-digit Master Code, and press [1].

You are now ready to mount and install your DL6500 / ETDLN Series locks and give out your User Codes. Before installation, it is suggested you test and verify that all User Codes entered are active (see next page).

Testing the Codes Entered

Verifying Basic Keypad User Codes

Test a valid User Code:

VALID CODE - The Green LED will flash momentarily and the sounder will beep a few times after a valid code is entered.
INVALID CODE - The RED LED will flash several times and the sounder will beep several times after an invalid code is entered. Use Function 2 to re-program the code.

NOTES

Programming Functions--Overview

Function 1	**Change Master Code**	See page 19
Function 2	**Add/Delete/Change User Codes**	See page 19
Function 3	**User Disable (By User Number)**	See page 20
Function 4	**User Enable (By User Number)**	See page 20
Function 5	**User Enable with Timeout**	See page 20
Function 6	**Enable Total User Lockout**	See page 20
Function 7	**Disable Total User Lockout**	See page 20
Function 8	**Exit Program Mode**	See page 20
Function 9	**Enable User 300 (Service Code)**	See page 20
Function 10	**Erase All Users Except the Master Code**	See page 20
Function 11	**Reserved**	--
Function 12	**Clear All Schedules and Timeout Functions**	See page 21
Function 13	**Clear All Timeout Functions**	See page 21
Function 14 - 17	**Group 1-4 Disable**	See page 21
Function 18	**Disable All Groups**	See page 21
Function 19 - 22	**Group 1-4 Enable**	See page 21
Function 23	**Enable All Groups**	See page 21
Function 24	**Reserved**	--
Function 25 - 28	**Group Disable with Timeout**	See page 22
Function 29	**Disable All Groups with Timeout**	See page 22
Function 30 - 33	**Group Enable with Timeout**	See page 22
Function 34	**Disable All Groups with Timeout**	See page 22
Function 35	**Group Add/Delete Association**	See page 22
Function 36 - 37	**Reserved**	--
Function 38	**Set Date**	See page 23
Function 39	**Set Time**	See page 23
Function 40	**Set Weekday**	See page 23
Function 41	**Daylight Saving Time Start Date**	See page 23
Function 42	**Daylight Saving Time End Date**	See page 23
Function 43	**Speed Up Clock**	See page 24
Function 44	**Slow Down Clock**	See page 24
Function 45 - 46	**Passage Mode Enable/Disable**	See page 24
Function 47	**Timed Passage Mode**	See page 24

Function 48	**Enable Passage Mode**	See page 25
Function 49	**Disable Passage Mode**	See page 25
Function 50	**Return Lock to Normal Passage Mode Schedule**	See page 25
Function 51	**Passage Mode Configuration**	See page 25
Function 52 - 54	**Pass Time**	See page 25
Function 55	**Reserved**	--
Function 56	**Reserved**	--
Function 57	**Reserved**	--
Function 58	**Reserved**	--
Function 59	**Reserved**	--
Function 60	**Number of Attempt Before Lockout**	See page 26
Function 61	**Set the Attempts Lockout Time**	See page 26
Function 62 - 63	**Reserved**	--
Function 64 - 65	**Hardwired Remote Input Wireless Remote Release Pairing**	See page 26
Function 66	**Ambush Code**	See page 26
Function 67	**Add Relay/System Features**	See page 27
Function 68	**Delete All Relay Functions and System Options added by Function 67**	See page 28
Function 69 - 70	**Enable/Disable Enter Key**	See page 29
Function 71	**Reserved**	--
Function 72 - 73	**Scheduled Enable/Disable Passage Mode**	See page 29
Function 74 - 77	**Schedule Enable Group 1 - 4**	See page 29
Function 78	**Schedule Enable All Groups**	See page 29
Function 79 - 82	**Schedule Disable Group 1 - 4**	See page 29
Function 83	**Schedule Disable All Groups**	See page 29
Function 84 - 87	**Quick Schedules - Enable Group**	See page 30
Function 88	**Passage Mode** (Open Time Window)	See page 30
Function 89	**Passage Mode** (Close Time Window)	See page 30
Function 90	**Relay Activation** (Open Time Window)	See page 31
Function 91	**Relay Activation** (Close Time Window)	See page 31
Function 92	**Enable Group 4** (Open Time Window)	See page 32
Function 93	**Enable Group 4** (Close Time Window)	See page 32
Function 94	**Disable Radio**	See page 32
Function 95 - 98	**Reserved**	--
Function 99	**Clear All Lock Programming**	See page 32

Programming Functions

USERS

1. New Master Code (User Number 1)

[L] [1] [L] [_ _ _ _ _ _] [L] [_ _ _ _ _ _] [*]

(New Master Code) (Confirm New Master Code)

M

- Master Code must be 6 digits-only.
- Master Code is Keypad Code Access only.
- **Factory Default =** [1] [2] [3] [4] [5] [6]
- See "Lock Design Overview" on page 6 for more information about Master Codes.

2. Adding and Deleting User Codes (for User Numbers 2-5000)

(Entering a "User Code" / "PIN No. Code" into the lock programming) [L] [2] [L] [_ _ _ _] [L] [_ _ _ _ _ _] [*]

(User Number) (User Code)

(Deleting Entire User) [L] [2] [L] [_ _ _ _] [*] [Beep Beep]

(User Number)

3

- User Number must be between 2 and 5000.
- User Code must be 3-6 digits.
- Each User Code can be thought of as a person. As long as each person possesses their own unique User Code, you can control access to the lock by adding or deleting User Codes. See "Terminology Used in this Manual" on page 7 for more information.

Lock Defaults for DL6500 / ETDLN Series locks

Users added will default to a Group Association and a Programming Level ability as follows:

USER TYPE	USER NUMBER	GROUP DEFAULT ASSOCIATION	MINIMUM PROGRAM LEVEL (See page 7)
Master Code	1	-	M
Installer Codes	2 & 3	none	4
Manager Codes	4 - 6	none	3
Supervisor Codes	7 - 9	none	2
(Reserved)	10 - 11	none	--
Basic User Codes	12 - 50	none	none
Basic User Codes Group 1	51 - 100	1	none
Basic User Codes Group 2	101 - 150	2	none
Basic User Codes Group 3	151 - 200	3	none
Basic User Codes Group 4	201 - 250	4	none
Basic User Codes	251 - 296	none	none
Quick Enable User 300 Code	297	none	none
(Reserved--see page 8)	298	none	none
Guard Tour Code*	299	none	none
Service Code	300	none	none
Basic User Codes	301-5000	none	none

*This code is a *Non-Pass* code and therefore does not allow passage through the door.

Programming Functions (cont'd)

User Enable/Disable (By User Number)

- User Number must be between 2 and 5000. **2**

NOTE: Will Enable/Disable Users even if the User is associated with an enabled Group. Use Feature 3 to disable a specific User Number and their associated User Code. If the disabled User Code is entered, the lock will flash 1 Green and 4 Red Flashes (with 1 long and 5 short beeps) indicating that the User Code exists in memory, but is disabled. Function 4 will "undo" Function 3.

3. Disable User

[3] [L] [_ _ _ _] [*]
(User Number)

4. Enable User

[4] [L] [_ _ _ _] [*]
(User Number)

5. User Enable with Timeout

(Enter Timeout, XXX Hours)
(This Function enabled through keypad only)

[5] [L] [_ _ _ _] [L] [_ _ _ _] [*]
(User Number) (XXX Hours)

- With Function 5, User Numbers must be between 2-5000, hours must be between 001-999. **2**
- Function 5 can *temporarily* override a disabled User (disabled using Function 3 above).
- Since this is a temporary feature, Function 5 can only be enabled using the keypad.
- **Example:** Brian, User Number 1157, rarely works at the office, but when he does, enable him for his 8 hour work day by entering Program Mode and pressing: [5] [L] [1] [1] [5] [7] [L] [0] [0] [8] [*].
- **NOTE:** Up to 4 Timeout Functions may be pending at any one time. An error beep will sound when attempting to program more than 4 Timeout Functions.

User Lockout Mode

Prevents all User Codes (Except User 1 Code) from operating the lock. **Note:** No other programming functions or schedules (including a DL-Windows data transfer) will re-enable Users. Users must be re-enabled with Function 7. **Note:** Does not change the User enable/disable status. **Note:** If the lock is currently in Passage Mode (door "unlocked") and Function 6 is programmed, the lock will remain in Passage Mode. **M**

6. Enable Total User Lockout Mode

(This Function enabled through keypad only)

[L] [6] [*]

7. Disable Total User Lockout Mode

(This Function enabled through keypad only)

[L] [7] [*]

8. Exit Program Mode

[L] [8] [*]

Allows rapid exit from Program Mode. Program Mode exit is confirmed by several beeps (same functionality as holding down any keypad key for 3 seconds in order to exit Program Mode). **3**

9. Enable User 300 (Service Code)

[L] [9] [*]

Service Code is a One-Time-Only Code. Once it is used, it is disabled until enabled again. **2**
NOTE: User Number 297 is used to reset Service Code Use. See "Terminology Used in this Manual" on page 8 for more information and examples regarding special Users 297-300.

10. Erase All Users Except the Master Code (User 1)

(This Function enabled through keypad only)

[L] [1] [0] [L] [0] [0] [0] [*]

Erases all User Codes except the Master Code (User 1). **M**

- Function 10 can only be performed using the keypad.

11. Reserved

Programming Functions (cont'd)

CLEAR FUNCTIONS

12. Clear All Schedules and Timeout Functions

L 1 2 L 0 0 0 *

Function 12 clears all programmed *Schedules* and all *Timeout Functions*. (To clear All Timeout Functions only, see Function 13 below). Function 12 will clear all of the following: All Schedule Functions 72 through 93, Timeout Functions 5, 25 through 34 and Function 47. **Note:** Function 12 also resets Passage Mode and any disabled Groups. After using Function 12, your Scheduled/Timeout features must be manually re-programmed.

NOTE: Up to 4 Timeout Functions may be pending at any one time. An error beep will sound when attempting to program more than 4 Timeout Functions. This Function only disables the timeout; the event associated with the timeout will remain.

3

13. Clear All Timeout Functions

(This Function enabled through keypad only)

L 1 3 L 0 0 0 *

Function 13 clears all *Timeout Functions*. (To clear All Schedules and Timeout Functions, see Function 12 above). Function 13 will clear all of the following: All Timeout Functions 5, 25-34 and Function 47. After using Function 12, your Scheduled/Timeout features must be manually re-programmed.

NOTE: Up to 4 Timeout Functions may be pending at any one time. An error beep will sound when attempting to program more than 4 Timeout Functions. This Function only disables the timeout; the event associated with the timeout will remain.

3

Important: It is the responsibility of the lock programmer to verify the proper lock/unlock conditions and Group conditions after programming the lock with Function 12 and 13.

GROUPS

Group Enable/Disable

Enter the functions below to Enable/Disable Groups. Functions 14 - 23 will each override existing scheduled events. Therefore, Functions 14 - 23 are temporary, take effect immediately, and are always overridden by future scheduled events that already exist within the lock programming.

2

14. Disable Group 1 — L 1 4 *

15. Disable Group 2 — L 1 5 *

16. Disable Group 3 — L 1 6 *

17. Disable Group 4 — L 1 7 *

18. Disable All Groups — L 1 8 *

19. Enable Group 1 — L 1 9 *

20. Enable Group 2 — L 2 0 *

21. Enable Group 3 — L 2 1 *

22. Enable Group 4 — L 2 2 *

23. Enable All Groups — L 2 3 *

PRIORITY ORDER

1. **Disabled Users**
2. **Enabled Groups**
3. **Disabled Groups**
4. **Enabled Users**

The Priority Order details which Function will take effect before ("have priority over") others. For example, as per the list above, Enabled Users have the lowest priority, and other Functions can affect the status of these Users. Disabling a Group (Functions 14-18) will take priority over the enabled Users in that Group, disabling them. Enabling Groups (Functions 19-23) will take priority over those tasks lower in the list, and finally disabling a User (Function 3) takes priority over all other tasks listed.

24. Reserved

Programming Functions (cont'd)

GROUPS

NOTE: Clear All Timeout Functions by entering Function 13.

Group Enable/Disable with Timeout (Enter Timeout, XXX Hours)

(Functions 25-34 are enabled through the keypad only)

2

- Hours must be between 001-999. Enter the functions below to Enable/Disable Groups for the amount of time entered in hours. **NOTE:** Only 4 Timeout Functions are allowed at any one time. An error beep will sound when attempting to program more than 4 Timeout Functions. Functions 25 - 34 will each override existing scheduled events. Therefore, Functions 25 - 34 are temporary, take effect immediately, and are always overridden by future scheduled events that already exist within the lock programming. **NOTE:** Functions 25-34 are enabled through the keypad only.
- **Example:** All 15 members of the Accounting Department are members of Group 4, and a schedule programmed in the department's door lock reflects their normal working hours of 9 AM through 5 PM, Monday through Friday. But one day a special event occurs, and all Accounting Department members are requested to stay an extra hour until 6 PM. Therefore, at 5 PM, the manager (wishing to temporarily enable Group 4 users for an extra hour) enters Program Mode and presses: [1] [3] [3] [1] [0] [0] [1] [*]. Likewise, if the manager wished to send his department home early at 3 PM, the manager could enter [1] [2] [8] [1] [0] [0] [2] [*].

25. Timed Disable Group 1 — [1] [2] [5] [1] [_ _ _] [*] (XXX Hours)

26. Timed Disable Group 2 — [1] [2] [6] [1] [_ _ _] [*] (XXX Hours)

27. Timed Disable Group 3 — [1] [2] [7] [1] [_ _ _] [*] (XXX Hours)

28. Timed Disable Group 4 — [1] [2] [8] [1] [_ _ _] [*] (XXX Hours)

29. Timed Disable All Groups — [1] [2] [9] [1] [_ _ _] [*] (XXX Hours)

30. Timed Enable Group 1 — [1] [3] [0] [1] [_ _ _] [*] (XXX Hours)

31. Timed Enable Group 2 — [1] [3] [1] [1] [_ _ _] [*] (XXX Hours)

32. Timed Enable Group 3 — [1] [3] [2] [1] [_ _ _] [*] (XXX Hours)

33. Timed Enable Group 4 — [1] [3] [3] [1] [_ _ _] [*] (XXX Hours)

34. Timed Enable All Groups — [1] [3] [4] [1] [_ _ _] [*] (XXX Hours)

35. Group Add/Delete Association

[1] [3] [5] [1] [_ _ _] (User Number) [1] [_ _ _ _] (Groups) [*]

3

As per the chart on page 9, the lock's default programming from the factory associates certain User Numbers with certain Groups. To override these default Group associations, Function 35 manually associates (or disassociates) a selected User with a selected Group. During programming, Groups not selected are then disassociated from the User. Function 35 is helpful when the number of Users you wish to add to a Group outgrows the number of User Numbers defaulted to a Group (50); or if an existing User joins a department and you wish to simply add them to a Group.

- User Number must be between 2 and 5000; Groups 1-4 (to associate with User) may be selected.

Add Example: To associate User 67 with Groups 1, 2 and 4;

Enter: [1] [3] [5] [1] [6] [7] [1] [1] [2] [4] [*]

Delete Example: To remove all Group associations for User 67;

Enter: [1] [3] [5] [1] [6] [7] [*]

NOTE: If a User is associated with more than one Group, **all** associated Groups would have to be disabled before the User is disabled.

36 - 37. Reserved

Programming Functions (cont'd)

CLOCK SETTINGS

38. Set Date

[L] [3] [8] [L] [_ _ _ _ _ _] [*]
(Date)

- Use Month Day Year format - MMDDYY - Single digit months and days are entered with a preceding zero.
- Enter ONLY the last two digits of the year.

3

For Example: March 8, 2030; Enter:
[L] [3] [8] [L] [0] [3] [0] [8] [3] [0] [*]

39. Set Time

[L] [3] [9] [L] [_ _ _ _] [*]
(Time)

- Time must be 4 digits
- Use 24 Hour Format (add 12 hours to program PM time)

3

For Example: To set time to 8:25PM;
Enter: [L] [3] [9] [L] [2] [0] [2] [5] [*]

For Example: To set time to 8:25AM;
Enter: [L] [3] [9] [L] [0] [8] [2] [5] [*]

40. Set Weekday

[L] [4] [0] [L] [_] [*]
(Day)

- For day enter: 1 for Sunday, 2 for Monday, 3 for Tuesday, 4 for Wednesday, 5 for Thursday, 6 for Friday and 7 for Saturday.

3

For Example: To set day to Sunday;
Enter: [L] [4] [0] [L] [1] [*]

41. Daylight Saving Time Start Date

[L] [4] [1] [L] [M M W D] [*]
(DST Starting Month, Month, Week, Day)

4

The manner in which Daylight Saving Time (DST) is observed varies with location, therefore the DST adjustment is fully flexible to accommodate these regional differences. Function 41 allows the entry of a *DST Start Date* (month, day and week), and Function 42 allows the entry of a *DST End Date* (month, day and week). DST begins and ends at 2AM on the programmed date. **Enter** [L] [4] [1] [L] [0] [0] [0] [*] **to disable DST**. All locks leave the factory with DST enabled and pre-programmed to the following start and end dates (for the USA beginning 2007):

- **Default DST Start Date:** March, Week 2, Sunday ("Second Sunday in March")
- **Default DST End Date:** November, Week 1, Sunday ("First Sunday in November")

To program the DST start date using the keypad, press: [L] [4] [1] [L] [M M W D] [*] where "M M W D" represents:

- **"M M"** = **Two digits of the month** (01 through 12 = January through December. Single digit months are entered with a preceding zero).
- **"W"** = **Single digit for "week of the month"** (valid entries are 1-5 where "1" is the first week, "2" is the second week, "3" is the third week, "4" is the fourth week and "5" is the last week of the month.
- **"D"** = **Day of the week** (valid entries are 1-7: 1 for Sunday, 2 for Monday, 3 for Tuesday, 4 for Wednesday, 5 for Thursday, 6 for Friday and 7 for Saturday).

Example: To set the default start date of "second Sunday in March", press:

[L] [4] [1] [L] [**0 3 2 1**] [*] (**03** = "March", **2** = "2nd week", **1** = Sunday).

42. Daylight Saving Time End Date

[L] [4] [2] [L] [M M W D] [*]
(DST Ending Month, Month, Week, Day)

4

End date of Daylight Saving Time (month, week, day). **Enter** [L] [4] [2] [L] [0] [0] [0] [*] **to disable DST**.
See Function 41 for full explanation.

Programming Functions (cont'd)

CLOCK ADJUST

Clock Adjust

Number of seconds to adjust (speed up/slow down) the clock each day must be between 0-55 seconds. **4**

Note: Repeated use of these Functions are not "cumulative" (this means, for example, if the clock has *already* been set to speed up 10 seconds per day, and then is found to need an additional 10 seconds, then program 20 seconds using Function 43).

Example 1: Clock is losing 13 seconds every day, enter:
[🔒] [4] [3] [🔒] [1] [3] [*].

This example assumes that the Clock Adjust setting was at the factory default of zero.

Example 2: Clock is gaining 13 seconds every day, enter:
[🔒] [4] [4] [🔒] [1] [3] [*].

This example assumes that the Clock Adjust setting was at the factory default of zero.

Example 3: To set the clock adjust setting back to the factory default of zero, enter:
[🔒] [4] [3] [*] or [🔒] [4] [4] [*]

Clock Accuracy
The internal oscillator is factory calibrated to an accuracy of ±5 minutes/year. Changes in ambient temperature may affect accuracy. If necessary, the accuracy of the internal clock may be adjusted by first updating the correct time via Function 39. After an interval of about 1 month, re-set the correct time via Function 39 and then view the Audit Log. Because the Audit Log displays both the "New Clock Time" and the "Old Clock Time", a daily accuracy (in seconds) can be determined by taking the difference in seconds between the "Old" and "New" times divided by the number of days between the two Function 39 entries. **Note:** Because the minimum available adjustment is 1 second per day, the inaccuracy of the clock must exceed about 6 minutes per year before adjustment is necessary.

43. Speed Up Clock [🔒] [4] [3] [🔒] [_ _] [*]
(This Function enabled through keypad only) (seconds)

44. Slow Down Clock [🔒] [4] [4] [🔒] [_ _] [*]
(This Function enabled through keypad only) (seconds)

PASSAGE MODE

Passage Mode Enable/Disable - Schedule will Override

- Function 45 allows passage through the door without the need for a User Code. Re-Lock using Function 46. **2**
- Programmed Schedules will override the state of the lock when Functions 45 and 46 are used. If it is required that programmed schedules do not override Passage Mode, enable/disable Passage Mode using Functions 48/49. **Note:** Because of the temporary nature of these features, Functions 45-47 can only be enabled using the keypad.

45. Enable Passage Mode [🔒] [4] [5] [*]
(This Function enabled through keypad only)

46. Disable Passage Mode [🔒] [4] [6] [*]
(This Function enabled through keypad only)

47. Timed Passage Mode [🔒] [4] [7] [🔒] [_ _ _] [*]
(This Function enabled through keypad only) (XXX Hours)

- Hours must be between 1 - 999. **2**

Function 47 allows passage through the door without the need for a User Code for the programmed amount of time.

- For example, if you wish your office door lock to be unlocked (unlocked = "Passage Mode") for the next 3 hours, enter Program Mode and press: [🔒] [4] [7] [🔒] [0] [0] [3] [*]

Programming Functions (cont'd)

PERMANENT PASSAGE MODE

Passage Mode Enable/Disable - Schedule will not Override

- Function 48 allows passage through the door without the need for a User Code. Re-Lock using Function 49.
- Programmed Schedules will not override the state of the lock using functions 48 and 49. If it is required that programmed schedules override Passage Mode, Enable/Disable Passage Mode using Functions 45/46. Use Function 50 to "undo" Functions 48 and/or 49, and therefore return the lock to all pre-existing scheduled functions. **Note:** Functions 48-50 can only be enabled using the keypad. ***Warning:*** *Function 49 will inhibit all scheduled Passage Mode events and overrides manually initiated timed unlock events (the DL-Windows feature "Manually Unlock Door" is an example of a timed unlock event).*

2

48. Enable *Permanent Passage Mode* [ ] [4] [8] [*]
(This Function enabled through keypad only)

49. Disable *Permanent Passage Mode* [ ] [4] [9] [*]
(This Function enabled through keypad only)

50. Return Lock to Normal Passage Mode Schedule [ ] [5] [0] [*]
(This Function enabled through keypad only)
(Locks will lock or unlock depending on the current schedule). Use Function 50 to "undo" Functions 48 and/or 49, and therefore return the lock to all pre-existing scheduled functions.

NOTE:	See Scheduled functions 72 and 73 for Scheduled Passage Mode.

51. Passage Mode Configuration [ ] [5] [1] [ ] [_] [*]
(Mode)

- **Mode 1 (Normal):** Passage Mode must be enabled/disabled using Function 45 and 46. **Mode 1 (Normal) is the factory default.**
- **Mode 2:** Group 2 toggles Passage Mode.
- **Mode 3:** Group 2 enables, Group 3 disables Passage Mode. Disable Passage Mode has priority if User is a member of both Groups 2 and 3.

  With **Mode 2**, each time any member of Group 2 enters their User Code, they will toggle Passage Mode. For example, if Passage Mode is enabled, and a Group 2 User enters their User Code, Passage Mode will be disabled. If a few seconds later they enter their User Code again, Passage Mode will be enabled. With **Mode 3**, Group 2 members will always enable Passage Mode, and Group 3 members will always disable Passage Mode. For example, if Passage Mode is already enabled, and a Group 2 User enters their User Code, the Passage Mode status will not be changed due to the Function 51 Mode 3 configuration. If Passage Mode is already enabled, and a Group 3 User enters their User Code, Passage Mode will become disabled.

4

PASS TIME

Pass Time

The Pass Time is the length of time the lock stays unlocked after a valid User Code is entered. When the Pass Time expires, the lock will re-lock automatically. Use the functions below to change the Pass Time to 3, 10 or 15 seconds. **The Pass Time is defaulted to 3 seconds.**

4

52. Set Pass Time to 3 Sec. [ ] [5] [2] [*]

53. Set Pass Time to 10 Sec. [ ] [5] [3] [*]

54. Set Pass Time to 15 Sec. [ ] [5] [4] [*]

Programming Functions (cont'd)

55 - 59. Reserved

LOCKOUT

60. Number of Attempts Before Lockout

- Number of attempts before lockout must be 1-9 attempts. **4**
- The number of attempts is reduced by half every time the keypad is locked out without a successful code entry (default is 6 attempts).
- The attempt count is reset each time a valid code is entered.

[L] 6 0 [L] [_] [*]
(Number of Attempts)

61. Set the Attempts Lockout Time

- Lockout Time must be 1-60 seconds. **4**

How long the keypad is locked-out after a series of unsuccessful attempts (default is 18 seconds).

[L] 6 1 [L] [_ _] [*]
(Lockout Time)

62-63. Reserved

HARDWIRED REMOTE INPUT

Hardwired Remote Input / Wireless Remote Release Pairing

- Wire a Normally Open contact to wires (white & white). Momentarily close switch to unlock the lock to allow person to pass through door. **2**
- Enter the Functions below to disable / enable the hardwired Remote Input.

NOTE: The hard-wired Remote Input is enabled as part of the default program.

64. Disable Remote Input

[L] 6 4 [*]

65. Enable Remote Input

[L] 6 5 [*]

Note: In addition to using a wired momentary switch, Function 65 is also used to pair a compatible Wireless Remote Release such as the RR-1BUTTON (see WI1999) or the portable pocket-size RR-4BKEYFOB (see WI2004). Function 64 is also used to remove all paired Wireless Remote Releases from the locking device. *Be aware of the potential loss of Wireless Remote Release pairing(s) that can result from using Function 64*. Refer to the above WIs for complete instructions.

65. Pair Wireless Remote Release

[L] 6 5 [L] [____] [*]
Slot Number
(1-10)

AMBUSH

66. Ambush Code

[L] 6 6 [L] [_ _] [*]
(Ambush Code)

- Ambush code must be 2 digits. **3**
- An error will sound if the Ambush Code matches the 1st two digits of any User Code. See Function 67 for more information about the Ambush Function.

Programming Function 67

67. Add System Features	[1] [6] [7] [1] [_ _] [*] (Event Number)	4

Relay Features (For locks equipped with an internal relay)

Use Function 67 to program **one or more** lock events and the relay will energize when the programmed event(s) listed below occurs. For example, program [1] [6] [7] [1] [3] [*] and when an attempted entry fails (such as a User who enters an incorrect or un-programmed User Code), the relay will energize for 2 seconds. **Note:** For more information about the hardwired **Remote Input**, see page 14 (**WIRING**, **Hardwired Remote Input**) and page 26 (Function 65).

1. **Remote Input switch closed and Function 65 *Remote Input* enabled.** Because the hardwired Remote Input is enabled by factory default, the relay will energize when the hardwired Remote Input switch is closed.
2. **Remote Input switch closed and Function 64 *Remote Input* disabled.** If the hardwired Remote Input is disabled with Function 64, the relay will energize when the hardwired Remote Input Switch is closed.
3. **Failed attempted entry.** Relay energizes for 2 seconds when an attempted User Code entry fails.
4. **Disabled User or Group.** Relay energizes for 2 seconds when a disabled User or disabled Group member enters a User Code.
5. **Follow Access Granted.** When a valid User Code is entered into the keypad and the lock unlocks, the relay energizes for 2 seconds. Compare with Event 31.
6. **Group 1 User Code.** Relay energizes for 2 seconds when a scheduled Group 1 User Code is entered. See Function 90, page 31.
7. **Scheduled Lock Event.** Relay energizes for 2 seconds when lock is locked by a Schedule.
8. **Scheduled Unlock Event.** Relay energizes for 2 seconds when lock is unlocked by a schedule
9. **Lock Out.** Relay energizes for 2 seconds when a Lock Out occurs (i.e. number of attempts is exceeded, see Function 60).
10. **Ambush.** Relay energizes for 2 seconds when Ambush is tripped. See Function 66, page 26.
11. **First Key Press.** Relay energizes for 2 seconds at the first key press of any sequence.
31. **Follow Access Granted--No Time Limit.**** When a valid User Code is entered into the keypad and the lock unlocks, the relay energizes for the *same amount of time as the programmed Pass Time*. (The Pass Time is the length of time the lock stays unlocked after a valid User Code is entered. See functions 52-54). Use this feature for remote monitoring or other activation as this feature works independently of all other relay options. Programming this feature will supersede all other programmed relay features. Subsequent relay feature programming will not take effect while this feature is active. Before programming any other relay features, press [1] [6] [8] [1] [0] [0] [0] [*] to delete this feature.

System Options

24. One Time Access for Group 3 Users***
25. Disable Sounder
26. 5 sec. Delayed Entry *
27. 15 sec. Delayed Entry *
28. 45 sec. Delayed Entry *

Hardwired Remote Input Functions

29. **Toggle Passage Mode.** Hardwired Remote Input toggles Passage Mode.
30. **Forced Unlock Follows Remote Input.**** When hardwired Remote Input switch is closed, regardless of the current state of the lock, the lock unlocks for the duration of the hardwired Remote Input switch closure.
32. **Remote Input Disables Unit.**** Regardless of the current state, that state will remain unchanged (and keypad will be disabled) for the duration of the hardwired Remote Input switch closure.
34. **Forced Lock Follows Remote Input** ** When the hardwired Remote Input switch is closed, regardless of the

Programming Function 67 (cont'd)

67. Add System Features (cont'd) [L] [6] [7] [L] [_ _] [*] (Event Number) **4**

current state of the lock, the lock will lock for the duration of the hardwired Remote Input switch closure.

Enable Emergency Commands†

38. **Lock responds to "Global" Emergency Commands.** (Default = OFF, thus default = Lock responds to "Local" Emergency Commands only). Allows lock to respond to Emergency Lockdown requests initiated by Networx server running DL-Windows or another lock (as opposed to directly from a Wireless Remote Release).††
39. **Users are Disabled During Lockdown.** (Default = ON)†† Basic Users (User Numbers 12 - 5000) are denied access (passage through the door) during an Emergency.

43 **Enable Sounder on Emergency.** (Default = OFF) Integral sounder beeps for 30 seconds while in Emergency.

45 **Activate Local Emergency: Keypad initiates Local Emergency Commands.** (Default = ON). Initiating an Emergency command directly from the lock's keypad places only that lock into an Emergency state; the Emergency command is not sent to other locks in the system.

46 **Activate Global Emergency: Keypad initiates Global Emergency Commands.** (Default = OFF). Initiating an Emergency command directly from the lock's keypad immediately sends the Emergency command to all other locks in the system, then places the local lock into an Emergency state††.

47 **Activate Local Emergency: Keyfob initiates Local Emergency Commands.** (Default = ON). Initiating an Emergency command from a Wireless Remote Release (for example model RR-4BKEYFOB *Wireless Remote Release*) places only the paired lock into an Emergency state; the Emergency command is not sent to other locks in the system. ††.

48 **Activate Global Emergency: Keyfob initiates Global Emergency.** (Default = OFF). Initiating an Emergency command from a Wireless Remote Release (for example model RR-4BKEYFOB *Wireless Remote Release*) immediately sends the Emergency command to all other locks in the system, then places the paired lock into an Emergency state††.

* Features 26, 27 & 28 will delay User Codes 12 and higher only (except 297, 298 and 299, and any Emergency Command enabled User).

** Features 30, 31 & 32 should be used with External DC Power unless feature is used for short a duration or infrequently. Sustained closure of hardwired Remote Input or relay will drain batteries. Scheduled events and their associated audit trail entries will not occur during sustained closure of the hardwired Remote Input. **NOTE:** Enter [L] [6] [7] [L] [0] [0] [0] [*] to delete all relay features added by Function 67 (identical to Function 68).

*** Feature 24, "One Time Access for Group 3 Users", allows the creation of multiple 'one time only' User Codes. When activated, an entry by a Group 3 User allows entry only once, then user becomes disabled. **Note:** When the User Code is entered for the first time and access is granted, the Event Log will read "Entry" followed by "User Disabled". If the User Code is entered a second time, access will be denied, and the Event Log will read "User Denied Access".

To Enable the Feature: Enter Program Mode and enter the key sequence [L] [6] [7] [L] [2] [4] [*]. **To assign the selected User Codes to Group 3:** For example, to assign User Number 15 to Group 3, press: [L] [3] [5] [L] [1] [5] [L] [3] [*].

† Emergency Commands are disabled until a download from DL-Windows is performed. If a Function 67 or 68 (Clear Relay) is performed, Emergency Commands are turned off.

†† Upon initial power up of the lock, options 39, 45 and 47 are enabled. A subsequent profile download from DL-Windows will enable 38, 39, and 45 through 48.

Ambush Function (for locks equipped with an internal relay)

1. Connect relay to a device able to properly monitor dry contacts for an *Ambush* condition.
2. Program the relay for *Ambush Tripped* using Program Function 67(10) above.
3. Set the Ambush Code using Program Function 66.
4. When the Ambush Code is entered followed by a valid User Code, the relay will close for 2 seconds.

   Notes: The Ambush Code defaults to **99**. An error will sound if you try to program a new User Code starting with the Ambush Code.

Programming Functions (cont'd)

ENTER KEY

Enter Key

- When this function is enabled, the User must press [*] after any valid User Code entry. Therefore, this Function allows User Codes to be subsets of other User Codes. **4**

Examples:

[1] [2] [3] [*] can be a valid user code;
[1] [2] [3] [4] [*] can be a valid user code within the same lock.
[1] [2] [3] [4] [5] [6] [*] (Hold [L]) for Master User Code to enter Program Mode.

69. Enable [*] as Enter Key [L] [6] [9] [*]

70. Disable [*] as Enter Key [L] [7] [0] [*]

71. Reserved

SCHEDULES

NOTE: Clear All Schedule and Timeout Functions by entering Function 12. To set the time, see Function 39.

Scheduled Passage and Group

Use the functions below to enable Passage Mode and enable/disable Groups at the time programmed. **3**

- For day enter: 1 for Sunday, 2 for Monday, 3 for Tuesday, 4 for Wednesday, 5 for Thursday, 6 for Friday, 7 for Saturday, 8 for Monday to Friday, 9 for Saturday and Sunday, and 0 for all days of week.

Passage Mode

72. Schedule Enable Passage Mode ("Unlock") [L] [7] [2] [L] [_] (Day) [L] [_ _ _ _] (Time) [*]

73. Schedule Disable Passage Mode ("Lock") [L] [7] [3] [L] [_] (Day) [L] [_ _ _ _] (Time) [*]

Groups

74. Schedule Enable Group 1 [L] [7] [4] [L] [_] (Day) [L] [_ _ _ _] (Time) [*]

75. Schedule Enable Group 2 [L] [7] [5] [L] [_] (Day) [L] [_ _ _ _] (Time) [*]

76. Schedule Enable Group 3 [L] [7] [6] [L] [_] (Day) [L] [_ _ _ _] (Time) [*]

77. Schedule Enable Group 4 [L] [7] [7] [L] [_] (Day) [L] [_ _ _ _] (Time) [*]

78. Schedule Enable All Groups [L] [7] [8] [L] [_] (Day) [L] [_ _ _ _] (Time) [*]

79. Schedule Disable Group 1 [L] [7] [9] [L] [_] (Day) [L] [_ _ _ _] (Time) [*]

80. Schedule Disable Group 2 [L] [8] [0] [L] [_] (Day) [L] [_ _ _ _] (Time) [*]

81. Schedule Disable Group 3 [L] [8] [1] [L] [_] (Day) [L] [_ _ _ _] (Time) [*]

82. Schedule Disable Group 4 [L] [8] [2] [L] [_] (Day) [L] [_ _ _ _] (Time) [*]

83. Schedule Disable All Groups [L] [8] [3] [L] [_] (Day) [L] [_ _ _ _] (Time) [*]

Programming Functions (cont'd)

QUICK SCHEDULES

Quick Schedules - Enable Group

For your convenience, your lock comes pre-programmed with Quick Schedules, which, when programmed, enable Groups for popular blocks of time. Group members will be enabled during the blocks of time defined below, but will still need to enter their User Codes into the keypad to unlock the lock. **3**

- Group number must be 1-4; enter the number of the Group that is to be enabled for the time specified by the Quick Schedules below.

Note: These Quick Schedules can **only** be programmed through the keypad (not through DL-Windows), and existing Quick Schedules **will be over-written** by schedules downloaded from DL-Windows. Therefore, after downloading any DL-Windows schedules, be sure to re-program your Quick Schedules into your Lock Program.

84. Business Quick Schedule [i] 8 4 [i] [_] [*] (Group)
7AM-5PM, Monday - Friday
(This Function enabled through keypad only)

85. Day Quick Schedule [i] 8 5 [i] [_] [*] (Group)
7AM-5PM, All days, Sunday - Saturday
(This Function enabled through keypad only)

86. Evening Quick Schedule [i] 8 6 [i] [_] [*] (Group)
3PM-1AM, All days
(This Function enabled through keypad only)

87. Night Quick Schedule [i] 8 7 [i] [_] [*] (Group)
11PM-9AM, All days
(This Function enabled through keypad only)

SCHEDULES GROUP 1 ACTIVATED

Scheduled Passage Mode (Group 1 Activated)

Functions 88 and 89 allow you to set up a window of time where if any **Group 1** User Code is entered within this window, Passage Mode will be activated, allowing anyone to enter. **Note:** This feature can only be programmed using the lock keypad. For additional information, see "Group 1 Activated Features" on page 33. **3**

- For the **day** enter: 1 for Sunday, 2 for Monday, 3 for Tuesday, 4 for Wednesday, 5 for Thursday, 6 for Friday, 7 for Saturday, 8 for Monday to Friday, 9 for Saturday and Sunday, and 0 for all days of week.
- Enter time of day in 24 hour format (for example, for 2:15 PM, enter 14:15).

88. Passage Mode [i] 8 8 [i] [_] (Day) [i] [_ _ _ _] (Time) [*]
(Open Time Window)
(This Function enabled through keypad only)

89. Passage Mode [i] 8 9 [i] [_] (Day) [i] [_ _ _ _] (Time) [*]
(Close Time Window)
(This Function enabled through keypad only)

Programming Functions (cont'd)

SCHEDULES GROUP 1 ACTIVATED

Scheduled Relay Activation (Group 1 Activated)

3

Functions 90 and 91 allow you to set up a window of time where if any **Group 1** User Code is entered within this window, the relay will be activated for 2 seconds. This relay can be used with a Control Panel that has a key switch disarm option. For additional information, see "Group 1 Activated Features" on page 33.

- Also program Relay Function 6 using Function 67 ([ ] 6 7 [ ] 6 *).
- For **day** enter: 1 for Sunday, 2 for Monday, 3 for Tuesday, 4 for Wednesday, 5 for Thursday, 6 for Friday, 7 for Saturday, 8 for Monday to Friday, 9 for Saturday and Sunday, and 0 for all days of week.
- Enter time of day in 24 hour format (for example, for 2:15 PM, enter 14:15).

90. Relay Activation
(Open Time Window)

[ ] 9 0 [ ] [_] (Day) [ ] [_ _ _ _] (Time) *

91. Relay Activation
(Close Time Window)

[ ] 9 1 [ ] [_] (Day) [ ] [_ _ _ _] (Time) *

To Disarm a Burglary Control Panel

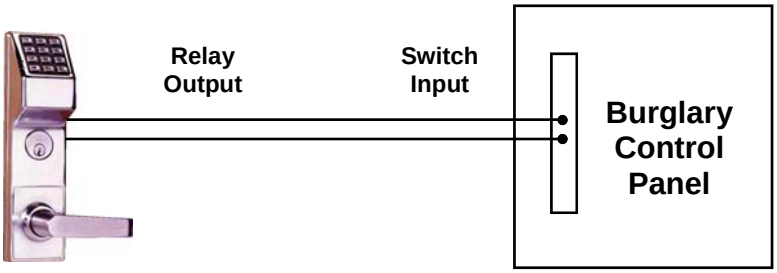

Alarm Panel with Switched Input for Disarming

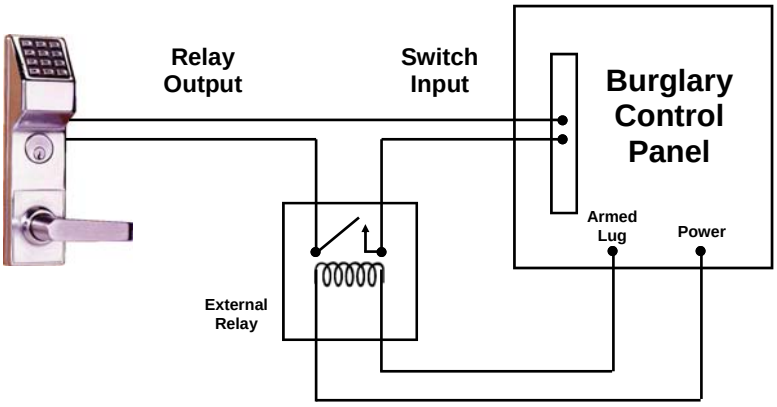

Alarm Panel with Switched Input for Toggled Arm/Disarm

NOTES

1. ***Group 1 Disarms a Burglary Control Panel*** will always disarm an alarm system. Arming should be performed by other means (such as Alarm Panel Keypad/Schedule).

2. Use a qualified electrical / alarm specialist to review your current alarm system and add additional components as needed (such as a relay, wire, resistors, connectors and/or diodes) and re-program the operation of your alarm system as needed.

Programming Functions (cont'd)

Scheduled Group 4 Enable (Group 1 Activated)

Functions 92 and 93 allow you to set up a window of time where if any **Group 1** User Code is entered within this window, Group 4 members will be enabled. (Group 4 members will still need to enter their User Codes to enter). For additional information, see "Group 1 Activated Features" on page 33. **3**

- For **day** enter: 1 for Sunday, 2 for Monday, 3 for Tuesday, 4 for Wednesday, 5 for Thursday, 6 for Friday, 7 for Saturday, 8 for Monday to Friday, 9 for Saturday and Sunday, and 0 for all days of week.
- Enter time of day in 24 hour format (for example, for 2:15 PM, enter 14:15).

92. Enable Group 4
(Open Time Window)
(This Function enabled through keypad only)

[9] [2] [ ] [_] (Day) [ ] [_ _ _ _] (Time) [*]

93. Enable Group 4
(Close Time Window)
(This Function enabled through keypad only)

[ ] [9] [3] [ ] [_] (Day) [ ] [_ _ _ _] (Time) [*]

Disable Radio Signal

94. Disable Radio
(This Function enabled through keypad only)

[ ] [9] [4] [ ] [0] [0] [0] [*]

Disables the radio signal (RF) link inside the lock, rendering all wireless communication with the selected lock inoperative. **3**

When using a lock without the DL-Windows RF link, it is highly recommended to enter this command to disable all radio access to the lock. If enrollment in a wireless system should be desired later, simply restart the lock either through the power up "ERASE ALL PROGRAMMING" procedure (see page 14) or through the use of the [ ] [9] [9] [ ] [0] [0] [0] [*] command, then enroll and reprogram the lock through the DL-Windows interface.

95 - 98. Reserved

CLEAR ALL PROGRAMMING

99. Clear All Lock Programming
(This Function enabled through keypad only)

[ ] [9] [9] [ ] [0] [0] [0] [*]

Clears all programming, and returns lock to factory default settings. Audit Trail contents are maintained. **M**

Groups and Scheduled Group 1 Examples

The following examples detail the more advanced features of the DL6500 / ETDLN Series locks. Although all features and device functions can be programmed using the lock keypad, when programming becomes more complex you may find it easier to use DL-Windows software to program your Alarm Lock security lock. For more information, contact your Alarm Lock security professional.

Assign a User to Two Groups

Create a User 101 (all Users 101-150 are members of Group 2 by default) and include User 101 in Group 3 (as well as the default Group 2).

1. Enter Program Mode (if not in already).
2. Using Function 2, create User 101 with a User Code of "789":
   Press [L] [2] [L] [1] [0] [1] [L] [7] [8] [9] [*].
3. Using Function 35, make User 101 a member of Group 2 *and* 3:
   Press [L] [3] [5] [L] [1] [0] [1] [L] [2] [3] [*].
4. Exit Program Mode.

Note: See step 3 above--although User 101 is by default a member of Group 2, you must include Group 2 when using Function 35 or the Group 2 association will be removed.

The example to add Users to Group 2 and Group 3 has been selected due to the fact that *Group 1 Activated Functions* require that a member of Group 1 enter their User Code to activate the Function, and it may become necessary to assign Users to Groups.

Group 1 Activated Features: Functions 88/89, 90/91 and 92/93

- **Function 88 and 89** allow for a window of time to be created where if any Group 1 User Code is entered within the programmed window, *Passage Mode* will be activated (the device physically unlocks, allowing passage for all). If a Group 1 User does not enter their User Code during the specified window, Functions 88/89 remain inactive.
- **Function 90 and 91** allow for a window of time to be created where if any Group 1 User Code is entered within the programmed window, an internal *Relay* will be activated for 2 seconds. This Relay can be used with a burglar alarm control panel that has a key switch disarm option. See **To Disarm a Burglary Control Panel** on page 31. If a Group 1 User does not enter their User Code during the specified window, Functions 90/91 remain inactive.
- **Function 92 and 93** allow for a window of time to be created where if any Group 1 User Code is entered within the programmed window, the *User Codes in Group 4* will be enabled. If a Group 1 User does not enter their User Code during the specified window, Functions 92/93 remain inactive. Companies typically use this feature to allow Group 1 Managers the ability to enable all Group 4 staff members during a certain window of time.

  The following examples illustrate how Functions 88-93 can be programmed into your DL6500 / ETDLN Series locks via the keypad:

Functions 88/89: Use Function 88 to set an *Open Time Window* (during which the Group 1 User must enter their User Code), and then use Function 89 to set the time to close the Window. Re-lock the door at night manually (Function 46).

1. Enter Program Mode (if not in already).
2. Using Function 2, create User 4 with a User Code of "456789":
   Press [L] [2] [L] [4] [L] [4] [5] [6] [7] [8] [9] [*].
3. Because User 4 does not have a default Group association, make User 4 a member of Group 1 using Function 35:
   Press [L] [3] [5] [L] [4] [L] [1] [*].
4. Use Function 88 and Function 89 (see page 30) to designate Passage Mode as being between the hours of 8:30 A.M. and 10 A.M. for all days of the week:
   Function 88 (Open Window Time) = 8:30 A.M.: Press [L] [8] [8] [L] [0] [L] [0] [8] [3] [0] [*]
   Function 89 (Close Window Time) = 10:00 A.M.: Press [L] [8] [9] [L] [0] [L] [1] [0] [0] [0] [*]
5. Exit Program Mode (hold down any key for 3 seconds).

The lock will now be put in Passage Mode (device physically unlocked) if User 4 (or any Group 1 member) enters their User Code between 8:30 A.M. and 10 A.M. If a Group 1 User does not enter their User Code during the specified window, Functions 88/89 remain inactive

- The device will have to be manually locked each night by entering the following command using Function 46:
  [L] [4] [6] [*]
- The device can also be programmed to automatically lock (disable Passage Mode) each night at 5 P.M. by using Function 73:
  [L] [7] [3] [L] [0] [L] [1] [7] [0] [0] [*]
- Remember to exit Function Mode when programming is complete.

Groups and Scheduled Group 1 Examples (cont'd.)

Functions 90/91: Use Function 90 and 91 (see page 31) to create a window of time where if any Group 1 User Code is entered within the programmed window, a *Relay* will be activated for 2 seconds. The Relay can be configured to disarm a burglary control panel. See page 31.

1. Enter Program Mode (if not in already).
2. Connect Relay to a burglar control panel with switch input for disarming.
3. Using Function 2, create User 4 with a User Code of "456789":
   Press [L] [2] [L] [4] [L] [4] [5] [6] [7] [8] [9] [*].
4. Because User 4 does not have a default Group association, make User 4 a member of Group 1 using Function 35:
   Press [L] [3] [5] [L] [4] [L] [1] [*].
5. Use Function 90 to set the time to open the window (8:30 A.M. all days of the week) allowing any Group 1 member to close the Relay for 2 seconds. **Note:** Only 1 Relay closure will occur even if another member of Group 1 enters their User Code. Use Function 91 to set the time to close the window (10 A.M. for all days of the week):
   Function 90 (Open Window Time) = 8:30 A.M.: Press [L] [9] [0] [L] [0] [L] [0] [8] [3] [0] [*]
   Function 91 (Close Window Time) = 10:00 A.M.: Press [L] [9] [1] [L] [0] [L] [1] [0] [0] [0] [*]
6. Exit Program Mode (hold down any key for 3 seconds).

The Relay will close, one time only, when a member of Group 1 enters their User Code between 8:30AM and 10:00AM. If a Group 1 User does not enter their User Code during the specified window, Functions 90/91 remain inactive

- The alarm panel will have to be armed at night by the User or by an automatic schedule function of the alarm panel.

Functions 92/93: Use Function 92 and 93 (see page 32) to create a window of time where if any Group 1 User Code is entered within the programmed window, *Group 4 Users* will be enabled.

1. Enter Program Mode (if not in already).
2. Using Function 2, create User 4 with a User Code of "456789":
   Press [L] [2] [L] [4] [L] [4] [5] [6] [7] [8] [9] [*].
3. Because User 4 does not have a default Group association, make User 4 a member of Group 1 using Function 35:
   Press [L] [3] [5] [L] [4] [L] [1] [*].
4. Using Function 17, disable Group 4. (Group 4 will need to be "disabled" before it can be "enabled" later).
   Press [L] [1] [7] [*].
5. Use Function 92 to set the time to open the window (8:30 A.M. all days of the week) allowing any Group 1 member to enable Group 4. Use Function 93 to set the time to close the window (10:00 A.M. all days of the week).
   Function 92 (Open Window Time) = 8:30 A.M.: Press [L] [9] [2] [L] [0] [L] [0] [8] [3] [0] [*]
   Function 93 (Close Window Time) = 10:00 A.M.: Press [L] [9] [3] [L] [0] [L] [1] [0] [0] [0] [*]
6. Exit Program Mode (hold down any key for 3 seconds).

The lock will now enable Group 4 User Codes if User 4 (or any Group 1 member) enters their User Code between 8:30 A.M. and 10 A.M. If no Group 1 member arrives to enter their User Code between 8:30 A.M. and 10 A.M., Group 4 User Codes will not be enabled and will remain disabled all day.

- The device will have to be manually locked each night by entering the following command using Function 82:
  [L] [4] [6] [*]
- The device can also be programmed to automatically disable Group 4 members each night at 5 P.M. by using Function 82:
  [L] [8] [2] [L] [0] [L] [1] [7] [0] [0] [*]
- Test the device by creating User 222 (with User Code 466466) and adding User 222 to Group 4:
  [L] [2] [L] [2] [2] [2] [L] [4] [6] [6] [4] [6] [6] [*]
  [L] [3] [5] [L] [2] [2] [2] [L] [4] [*]
- Remember to exit Function Mode when programming is complete.

Programming Record Sheet

Default Values are shown in parentheses.

Function Number(s)	Function Name	Programming
43/44	Clock Adjust	+/- [ ][ ] 0-55 Seconds (0) (0)
52/53/54	Pass Time	(3 sec) ☐ 10 sec ☐ 15 sec ☐
60	Set Lockout Attempts	[ ] 1-9 Attempts (6)
61	Set Lockout Time	[ ][ ] 1-60 seconds (1) (8)
64/65	Remote Input (hardwired momentary switch closure)	(Enable) ☐ Disable ☐
66	Ambush Code	[ ][ ] 00-99 Ambush Code (9) (9)
67	Add Relay/System Features	
69/70	Enter Key	Enable ☐ (Disable) ☐

Check all that apply:

1. Remote Input switch closed and Function 65 *Remote Input* enabled	☐
2. Remote Input switch closed and Function 64 *Remote Input* disabled	☐
3. Failed attempted entry	☐
4. Disabled User or Group	☐
5. Follow Access Granted	☐
6. Group 1 User Code	☐
7. Scheduled Lock Event	☐
8. Scheduled Unlock Event	☐
9. Lock Out	☐
10. Ambush	☐
11. First Key Press	☐
24. One Time Access for Group 3 Users	☐
25. Disable Sounder	☐
26. 5 sec. Delayed Entry	☐
27. 15 sec. Delayed Entry	☐
28. 45 sec. Delayed Entry	☐
29. Toggle Passage Mode	☐
30. Forced Unlock Follows Remote Input	☐
31. Follow Access Granted--No Time Limit	☐
32. Remote Input Disables Unit	☐
33. Remote Input Puts Unit in PC Communication Mode	☐
34. Forced Lock Follows Remote Input	☐
38. Lock responds to "Global" Emergency Commands (default = OFF)	☐
39. Users are Disabled During Lockdown (default = ON)	☐
43 Enable Sounder on Emergency	☐
44 Enable Inside Emergency Indicator	☐
45 Activate Local Emergency: Keypad initiates Local Emergency Commands	☐
46 Activate Global Emergency: Keypad initiates Global Emergency Commands	☐
47 Activate Local Emergency: Keyfob initiates Local Emergency Commands	☐
48 Activate Global Emergency: Keyfob initiates Global Emergency	☐

User Code Record Sheet

User Number (1-5000)	User Code (3-6 digits)						Group Association				User Name
							1	2	3	4	

Schedule Record Sheet

Function Number	Day(s) Program up to 500 scheduled functions. For Day Enter: 1 = Sunday, 2 = Monday, 3 = Tuesday, 4 = Wednesday 5 = Thursday, 6 = Friday, 7 = Saturday, 8 = Monday through Friday, 9 = Saturday and Sunday, 0 = All days of the week Enter time of day in 24-hour format (00:00- 23:59)	Time	Function Name
		:	
		:	
		:	
		:	
		:	
		:	
		:	
		:	
		:	
		:	
		:	
		:	
		:	
		:	
		:	
		:	
		:	
		:	
		:	
		:	
		:	
		:	
		:	
		:	
		:	
		:	
		:	
		:	
		:	
		:	
		:	

Glossary

ACCESS = Entry into a restricted area.

AMBUSH = A special Code entered at the keypad when the User is *coerced* into unlocking a security device. The device unlocks but sends a silent alarm with no indication at the keypad. Can be used to trip a relay, to alert security, or trip a silent alarm on a burglary control panel.

AUDIT TRAIL = A date/time stamped log of previous lock events.

BURGLARY CONTROL PANEL = Provides local alarm and remote communication to request security for burglary/break-in. An internal lock relay output used for Ambush can provide a silent alarm and call-for-help (for locks equipped with an internal relay).

CLOCK

- **REAL TIME CLOCK** = An accurate built-in clock that allows date/time stamping of events. The clock can be slowed or speeded up to fine tune long term accuracy to within three minutes per year (see Functions 43 and 44).
- **CLOCK SPEED** = The clock can be adjusted to allow faster/slower speeds and therefore increasing clock accuracy (see Functions 43 and 44).

CODE = Numeric sequence of numbers (such as: 1234) entered at the keypad. If *Star-Enter* key is required, must be followed by a [*] key.

- **AMBUSH CODE** = See Ambush.
- **BASIC USER CODE** = User Codes assigned to User Numbers 12+ (except Users 297-300). (Does not allow programming)
- **INSTALLER CODE** = User Codes assigned to User Numbers 2 and 3. (Allows all programming except Master functions).
- **INVALID CODE** = A numeric sequence of numbers entered via the keypad buttons that have not been programmed in the lock.
- **MANAGER CODE** = User Codes assigned to User Numbers 4 through 6. (Allows most of the programming functions).
- **MASTER CODE** = User Code assigned to User Number 1. Default (factory) Master Code is 123456. The User with the Master Code has complete control of the lock.
- **QUICK ENABLE USER 300 CODE** = Refers to the User Code entered by User 297 which (when entered at the keypad) enables the User Code assigned to User 300 for one time only.
- **SERVICE CODE** = User 300 User Code. Allows only one entry, then needs to be re-enabled by the User 297 User Code to regain access.
- **SUPERVISOR CODE** = User Codes assigned to Users 7, 8 and 9. Can only program day-to-day operation.
- **USER CODE** = Code used by Users. Code is 3 to 6 numeric digits long, allowing controlled entry.
- **VALID CODE** = A numeric sequence of numbers entered via the keypad buttons that have been programmed in the lock and identified by the lock as a User Code.

CREDENTIAL = A generic word used to indicate User Code, a hardwired Remote Input momentary contact, a Wireless Remote Release, or any future device or design that allows the lock to unlock, allowing passage through the door.

DATE = Month, Day and Year entered as MMDDYY.

DAY OF WEEK = Sunday through Saturday (where 1 = Sunday and 7 = Saturday).

DEFAULT = Default settings are the original settings that were set at the factory; in other words, it is the lock's original factory condition when the lock was first taken out of its box. The default settings are permanently encoded within the lock's fixed memory, and when the lock is first started, or when power is removed and re-applied (see **Wiring and Power-Up**, page 14), the original factory default settings are reloaded and take effect.

DISABLE = Turn off.

DOWNLOAD = Send data to the lock.

EMERGENCY COMMANDS = For use with the Trilogy Networx™ wireless network only. Wireless commands can be sent to all wireless locking devices in an Account during a crisis or other urgent situation. "Global Lock Down" locks all doors in the Account; "Global Passage" unlocks all doors in the Account; Return all devices in the Account to "normal" discontinues all emergency commands, reverting to "normal" non-emergency operation. **Note:** DL-Windows does not need to be running to allow these "Emergency" commands to be initiated; any wireless keypad can be used to disseminate these commands throughout the wireless system.

EMERGENCY GROUP = Upon the addition of each Gateway (see page 4) into an Account, the Gateway is automatically placed into an Emergency Group ("GROUP A" by default). This is done so that upon the initiation of an Emergency Command, ALL Gateways in the Emergency Group (and their assigned locks) will respond to Emergency Commands issued from DL-Windows. In addition, the automatic placement of a new Gateway into an Emergency Group allows for keypad-initiated Emergency Commands to lock all the locks in an entire system from a single

Glossary (cont'd)

wireless lock. See OI383 for more information.

ENABLE = Turn on.

EVENTS = Recorded lock activity.

FUNCTION (also called **Programming Functions**) = are the numbers used to program lock features (enabling/disabling Users, User Groups, Passage Mode, Schedules, etc.).

GATEWAY GROUP = See...EMERGENCY GROUP

GROUP

- **USER GROUP** = Defining a User to specific Groups, allows User entry when the Group is allowed entry.
- **GROUP 1 DISARMS BURGLAR CONTROL** = A Group 1 USER CODE entry can disarm an alarm panel during a predefined schedule. Should the Group 1 enter the lock outside of the scheduled time, the alarm will not disarm. The alarm panel must be armed through other means (such as an alarm control panel keypad). The burglary alarm control panel must be programmed to disarm from an armed state only and the zone input must be programmed for input disarming.
- **GROUP 1 ENABLES GROUP 4 USERS** = A Group 1 USER CODE entry during a predefined schedule will allow access to Group 4 Users.
- **GROUP 1 PUTS UNIT IN PASSAGE** = A Group 1 USER CODE entry during a pre-defined schedule will unlock unit.

GUARD TOUR = A *Guard Tour Code* is used to log the movement of a security guard as he or she makes rounds from one assigned guard tour station to the next. See "**User 299: *Guard Tour Code***" on page 8 for more information.

INSTALLER = See.... CODE, INSTALLER CODE.

KEYPAD = 10-numeric keys, [*] and special [🔒] key.

- **KEYPAD LOCKOUT** = Keypad is programmed to lockout Users, for a specified period of time, when a specified number of invalid User Codes are entered.
- **KEYPAD PROGRAMMING** = Ability to program the lock through the keypad.

KEYPRESS = Pressing a button on the Lock's Keypad.

LEVEL ABILITY = Predefined User types (such as Master, Installer, Manager and Supervisor) have specific abilities to program and /or control the lock.

LOCKOUT ATTEMPTS = A specified number of invalid User Code entries (1-9), that will disable the keypad for a predefined period of time (1-60 seconds).

LOCKOUT TIME = A predefined time (1-60) seconds that the lock will stop accepting User Codes, after a specified number of invalid User Code entries (1-9).

LOG = See... AUDIT TRAIL.

MANAGER = See... CODE, MANAGER CODE.

MASTER = See... CODE, MASTER CODE.

PAIR = To connect a button (located on the RR-1BUTTON Wireless Remote Release Button or the RR-4BKEYFOB Wireless Remote Release Keyfob) with a lock for the purpose of locking or unlocking the lock, or initiating Emergency Commands. Each button on the Wireless Remote Release can be "paired" (connected) with one locking device (four buttons on the RR-4BKEYFOB can be paired with four separate locking devices).

PASSAGE = Allow anyone to pass through the door without USER CODES (door is unlocked).

PROGRAM MODE = A mode allowing program / data to be entered through the keypad. Only specific Users can program a lock manually, by entering their USER CODE, followed by the [🔒] key. To exit program mode, hold any key until repeated beeps are heard.

PROGRAMMABLE RELAY FUNCTIONS = The internal relay (where equipped) can be programmed for one or more functions.

RELAY = Switched output allowing remote control of other devices (where equipped). For an explanation of all relay features, see Function 67 on pages 27 and 28.

REMOTE INPUT = Entry into a restricted area, by the closing of a hardwired momentary switch connected to the Remote Input wires (white and white) by someone on the other side of the door.

SCHEDULE = A programmed operation (enable / disable, lock/unlock, etc.) on a specific day (Sunday through Saturday) and time.

SCHEDULES, QUICK = Any one of four most common types of schedules can be programmed.

TIME = Hours and Minutes in the HHMM format.

TIME/DATE STAMP = A recorded date and time that an event occurred.

TIMEOUT = Immediate operation for a specified number of hours.

UPLOAD = Receive data from the lock.

USER = A person who has been provided with a USER CODE for access through the door.

USER LOCKOUT, TOTAL = All Users (except for Master Code) have been locked out.

ALARM LOCK LIMITED WARRANTY

ALARM LOCK SYSTEMS, INC. (ALARM LOCK) warrants its products to be free from manufacturing defects in materials and workmanship for twenty four months following the date of manufacture. ALARM LOCK will, within said period, at its option, repair or replace any product failing to operate correctly without charge to the original purchaser or user.

This warranty shall not apply to any equipment, or any part thereof, which has been repaired by others, improperly installed, improperly used, abused, altered, damaged, subjected to acts of God, or on which any serial numbers have been altered, defaced or removed. Seller will not be responsible for any dismantling or reinstallation charges, environmental wear and tear, normal maintenance expenses, or shipping and freight expenses required to return products to ALARM LOCK. Additionally, this warranty shall not cover scratches, abrasions or deterioration due to the use of paints, solvents or other chemicals.

THERE ARE NO WARRANTIES, EXPRESS OR IMPLIED, WHICH EXTEND BEYOND THE DESCRIPTION ON THE FACE HEREOF. THERE IS NO EXPRESS OR IMPLIED WARRANTY OF MERCHANTABILITY OR A WARRANTY OF FITNESS FOR A PARTICULAR PURPOSE. ADDITIONALLY, THIS WARRANTY IS IN LIEU OF ALL OTHER OBLIGATIONS OR LIABILITIES ON THE PART OF ALARM LOCK.

Any action for breach of warranty, including but not limited to any implied warranty of merchantability, must be brought within the six months following the end of the warranty period.

IN NO CASE SHALL ALARM LOCK BE LIABLE TO ANYONE FOR ANY CONSEQUENTIAL OR INCIDENTAL DAMAGES FOR BREACH OF THIS OR ANY OTHER WARRANTY, EXPRESS OR IMPLIED, EVEN IF THE LOSS OR DAMAGE IS CAUSED BY THE SELLER'S OWN NEGLIGENCE OR FAULT.

In case of defect, contact the security professional who installed and maintains your security system. In order to exercise the warranty, the product must be returned by the security professional, shipping costs prepaid and insured to ALARM LOCK. After repair or replacement, ALARM LOCK assumes the cost of returning products under warranty. ALARM LOCK shall have no obligation under this warranty, or otherwise, if the product has been repaired by others, improperly installed, improperly used, abused, altered, damaged, subjected to accident, nuisance, flood, fire or acts of God, or on which any serial numbers have been altered, defaced or removed. ALARM LOCK will not be responsible for any dismantling, reassembly or reinstallation charges, environmental wear and tear, normal maintenance expenses, or shipping and freight expenses required to return products to ALARM LOCK. Additionally, this warranty shall not cover scratches, abrasions or deterioration due to the use of paints, solvents or other chemicals.

This warranty contains the entire warranty. It is the sole warranty and any prior agreements or representations, whether oral or written, are either merged herein or are expressly cancelled. ALARM LOCK neither assumes, nor authorizes any other person purporting to act on its behalf to modify, to change, or to assume for it, any other warranty or liability concerning its products.

In no event shall ALARM LOCK be liable for an amount in excess of ALARM LOCK's original selling price of the product, for any loss or damage, whether direct, indirect, incidental, consequential, or otherwise arising out of any failure of the product. Seller's warranty, as hereinabove set forth, shall not be enlarged, diminished or affected by and no obligation or liability shall arise or grow out of Seller's rendering of technical advice or service in connection with Buyer's order of the goods furnished hereunder.

ALARM LOCK RECOMMENDS THAT THE ENTIRE SYSTEM BE COMPLETELY TESTED WEEKLY.

Warning: Despite frequent testing, and due to, but not limited to, any or all of the following; criminal tampering, electrical or communications disruption, it is possible for the system to fail to perform as expected. ALARM LOCK does not represent that the product/system may not be compromised or circumvented; or that the product or system will prevent any personal injury or property loss by burglary, robbery, fire or otherwise; nor that the product or system will in all cases provide adequate warning or protection. A properly installed and maintained alarm may only reduce risk of burglary, robbery, fire or otherwise but it is not insurance or a guarantee that these events will not occur. CONSEQUENTLY, SELLER SHALL HAVE NO LIABILITY FOR ANY PERSONAL INJURY, PROPERTY DAMAGE, OR OTHER LOSS BASED ON A CLAIM THE PRODUCT FAILED TO GIVE WARNING. Therefore, the installer should in turn advise the consumer to take any and all precautions for his or her safety including, but not limited to, fleeing the premises and calling police or fire department, in order to mitigate the possibilities of harm and/or damage.

ALARM LOCK is not an insurer of either the property or safety of the user's family or employees, and limits its liability for any loss or damage including incidental or consequential damages to ALARM LOCK's original selling price of the product regardless of the cause of such loss or damage.

Some states do not allow limitations on how long an implied warranty lasts or do not allow the exclusion or limitation of incidental or consequential damages, or differentiate in their treatment of limitations of liability for ordinary or gross negligence, so the above limitations or exclusions may not apply to you. This Warranty gives you specific legal rights and you may also have other rights which vary from state to state.