Face Recognition Server

Quick Start Guide

Quick Start Guide

COPYRIGHT ©2017 Hangzhou Hikvision Digital Technology Co., Ltd.
ALL RIGHTS RESERVED.
Any and all information, including, among others, wordings, pictures, graphs are the properties of Hangzhou Hikvision Digital Technology Co., Ltd. or its subsidiaries (hereinafter referred to be "Hikvision"). This user manual (hereinafter referred to be "the Manual") cannot be reproduced, changed, translated, or distributed, partially or wholly, by any means, without the prior written permission of Hikvision. Unless otherwise stipulated, Hikvision does not make any warranties, guarantees or representations, express or implied, regarding to the Manual.

About this Manual

This Manual is applicable to Face Recognition Server.

The Manual includes instructions for using and managing the product. Pictures, charts, images and all other information hereinafter are for description and explanation only. The information contained in the Manual is subject to change, without notice, due to firmware updates or other reasons. Please find the latest version in the company website (http://overseas.hikvision.com/en/).

Please use this user manual under the guidance of professionals.

Trademarks Acknowledgement

HIKVISION and other Hikvision's trademarks and logos are the properties of Hikvision in various jurisdictions. Other trademarks and logos mentioned below are the properties of their respective owners.

Legal Disclaimer

TO THE MAXIMUM EXTENT PERMITTED BY APPLICABLE LAW, THE PRODUCT DESCRIBED, WITH ITS HARDWARE, SOFTWARE AND FIRMWARE, IS PROVIDED "AS IS", WITH ALL FAULTS AND ERRORS, AND HIKVISION MAKES NO WARRANTIES, EXPRESS OR IMPLIED, INCLUDING WITHOUT LIMITATION, MERCHANTABILITY, SATISFACTORY QUALITY, FITNESS FOR A PARTICULAR PURPOSE, AND NON-INFRINGEMENT OF THIRD PARTY. IN NO EVENT WILL HIKVISION, ITS DIRECTORS, OFFICERS, EMPLOYEES, OR AGENTS BE LIABLE TO YOU FOR ANY SPECIAL, CONSEQUENTIAL, INCIDENTAL, OR INDIRECT DAMAGES, INCLUDING, AMONG OTHERS, DAMAGES FOR LOSS OF BUSINESS PROFITS, BUSINESS INTERRUPTION, OR LOSS OF DATA OR DOCUMENTATION, IN CONNECTION WITH THE USE OF THIS PRODUCT, EVEN IF HIKVISION HAS BEEN ADVISED OF THE POSSIBILITY OF SUCH DAMAGES.

REGARDING TO THE PRODUCT WITH INTERNET ACCESS, THE USE OF PRODUCT SHALL BE WHOLLY AT YOUR OWN RISKS. HIKVISION SHALL NOT TAKE ANY RESPONSIBILITES FOR ABNORMAL OPERATION, PRIVACY LEAKAGE OR OTHER DAMAGES RESULTING FROM CYBER ATTACK, HACKER ATTACK, VIRUS INSPECTION, OR OTHER INTERNET SECURITY RISKS; HOWEVER, HIKVISION WILL PROVIDE TIMELY TECHNICAL SUPPORT IF REQUIRED.

SURVEILLANCE LAWS VARY BY JURISDICTION. PLEASE CHECK ALL RELEVANT LAWS IN YOUR JURISDICTION BEFORE USING THIS PRODUCT IN ORDER TO ENSURE THAT YOUR USE CONFORMS THE APPLICABLE LAW. HIKVISION SHALL NOT BE LIABLE IN THE EVENT THAT THIS PRODUCT IS USED WITH ILLEGITIMATE PURPOSES.

IN THE EVENT OF ANY CONFLICTS BETWEEN THIS MANUAL AND THE APPLICABLE LAW, THE LATER PREVAILS.

Regulatory Information

FCC Information

Please take attention that changes or modification not expressly approved by the party responsible for compliance could void the user's authority to operate the equipment.

FCC compliance: This equipment has been tested and found to comply with the limits for a Class A digital device, pursuant to part 15 of the FCC Rules. These limits are designed to provide reasonable protection against harmful interference when the equipment is operated in a commercial environment. This equipment generates, uses, and can radiate radio frequency energy and, if not installed and used in accordance with the instruction manual, may cause harmful interference to radio communications. Operation of this equipment in a residential area is likely to cause harmful interference in which case the user will be required to correct the interference at his own expense.

FCC Conditions

This device complies with part 15 of the FCC Rules. Operation is subject to the following two conditions:

1. This device may not cause harmful interference.
2. This device must accept any interference received, including interference that may cause undesired operation.

EU Conformity Statement

This product and - if applicable - the supplied accessories too are marked with "CE" and comply therefore with the applicable harmonized European standards listed under the EMC Directive 2014/30/EU, the LVD Directive 2014/35/EU, the RoHS Directive 2011/65/EU.

2012/19/EU (WEEE directive): Products marked with this symbol cannot be disposed of as unsorted municipal waste in the European Union. For proper recycling, return this product to your local supplier upon the purchase of equivalent new equipment, or dispose of it at designated collection points. For more information see: www.recyclethis.info

2006/66/EC (battery directive): This product contains a battery that cannot be disposed of as unsorted municipal waste in the European Union. See the product documentation for specific battery information. The battery is marked with this symbol, which may include lettering to indicate cadmium (Cd), lead (Pb), or mercury (Hg). For proper recycling, return the battery to your supplier or to a designated collection point. For more information see: www.recyclethis.info

Industry Canada ICES-003 Compliance

This device meets the CAN ICES-3 (A)/NMB-3(A) standards requirements.

Applicable Models

This manual is applicable to the models listed in the following table.

Series	Model
Face Recognition Server	DS-IE6308-E/FA
	DS-IE6316-E/FA
	DS-IE6332-E/FA
	DS-IE6364-E/FA

Symbol Conventions

The symbols that may be found in this document are defined as follows.

Symbol	Description
NOTE	Provides additional information to emphasize or supplement important points of the main text.
WARNING	Indicates a potentially hazardous situation, which if not avoided, could result in equipment damage, data loss, performance degradation, or unexpected results.
DANGER	Indicates a hazard with a high level of risk, which if not avoided, will result in death or serious injury.

Safety Instructions

- Proper configuration of all passwords and other security settings is the responsibility of the installer and/or end-user.
- In the use of the product, you must be in strict compliance with the electrical safety regulations of the nation and region. Please refer to technical specifications for detailed information.
- Input voltage should meet both the SELV (Safety Extra Low Voltage) and the Limited Power Source with 100~240 VAC or 12 VDC according to the IEC60950-1 standard. Please refer to technical specifications for detailed information.
- Do not connect several devices to one power adapter as adapter overload may cause over-heating or a fire hazard.
- Please make sure that the plug is firmly connected to the power socket.
- If smoke, odor or noise rise from the device, turn off the power at once and unplug the power cable, and then please contact the service center.

Preventive and Cautionary Tips

Before connecting and operating your device, please be advised of the following tips:

- Ensure unit is installed in a well-ventilated, dust-free environment.
- Unit is designed for indoor use only.
- Keep all liquids away from the device.
- Ensure environmental conditions meet factory specifications.
- Ensure unit is properly secured to a rack or shelf. Major shocks or jolts to the unit as a result of dropping it may cause damage to the sensitive electronics within the unit.
- Use the device in conjunction with an UPS if possible.
- Power down the unit before connecting and disconnecting accessories and peripherals.
- Improper use or replacement of the battery may result in hazard of explosion. Replace with the same or equivalent type only. Dispose of used batteries according to the instructions provided by the battery manufacturer.

Chapter 1 Panel Description

1.1 Front Panel

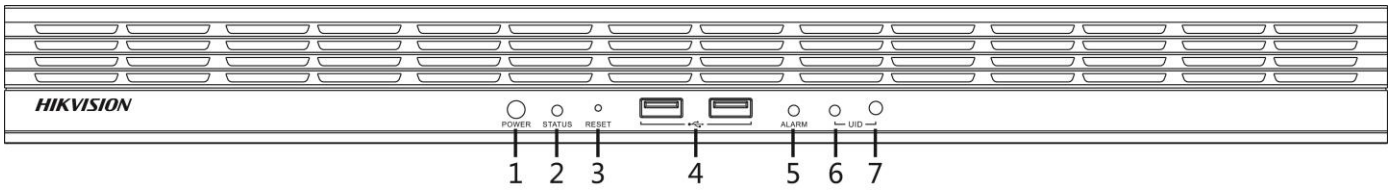

Figure 1-1 Front Panel

Table 1-1 Panel Description

No.	Name	Function Description
1	Power button	● Press it to power on device. The button is blue when device is on. ● Hold it for 3 seconds to force shut down the device.
2	Status indicator	● Solid blue: System is naormal. ● Unlit: System is abnormal.
3	Reset button	Press it to restore device to defaults.
4	USB interfaces	Two USB 2.0 interfaces for connecting USB devices.
5	Alarm indicator	Solid red when motherboard is abnormal.
6	UID indicator	Used to position server. It is blue whenUID is on.
7	UID button	Turn on/off UID indicator.

1.2 Rear Panel

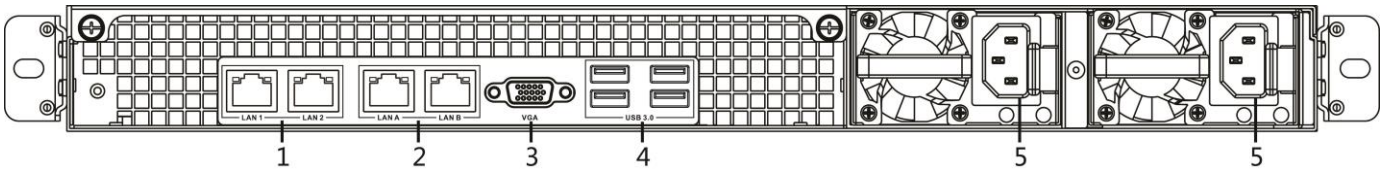

Figure 1-2 Rear Panel

Table 1-2 Panel Description

No.	Name	Description
1	LAN 1/LAN 2	2 × 10M/10M/1000M data network interface.
2	LAN A/LAN B	2 × 10M/100M/1000M management network interface.
3	VGA	VGA video output interface
4	USB interface	Four USB 3.0 interfaces for connecting USB devices.
5	Power supply	Power supply

Chapter 2 Installation

2.1 Installation Instruction

Before installing the server, please be advised of following tips:

- Check the delivered package. If any object is damaged or lacked, please contact the dealer.
- Ensure the server is installed in a well-ventilated, dust-free environment.
- Keep away from hot source, electric noise, and electromagnetic field.
- To ensure adequate airflow and safety, install the server in a dedicated rack.
- Use a rack with enough bearing capacity. And properly keep the server.
- To ensure adequate airflow and convenient maintenance, deploy sufficient room for rack and wall.
- Provide the server with rated power supply.
- Do not share server power socket with other devices.
- Ensure the rack is correctly grounded.
- It is highly recommended that an Uninterruptible Power Supply (UPS) is used in conjunction with the server.
- As a Class A product, the server may cause radio interference. You are recommended to take practical measures for the interference.

2.2 Uninstall Power Module

Purpose:

Follow the steps to uninstall power modules.

Step 1 Unlock the power module via the spring bolt.

Step 2 Pull the power module out of the server.

2.3 Server Installation

Purpose:

Follow the steps to install the rear part of inner rails in the server. The front part has been installed when delivered.

NOTE

Rack requirement: The distance between the front column and rear column ranges from 660 to 850 mm.

2.3.1 Inner Rail Installation

Purpose:

Follow the steps to install the rear part of inner rails in the server. The front part has been installed when delivered.

Step 1 Confirm that the left and right inner rails have been correctly identified.

Step 2 Place the inner rail firmly against the side of the chassis, aligning the hooks on the side of the chassis with the holes in the inner rail.

Step 3 Forwards slide the inner rail towards the front of the chassis until the rail clicks into the locked position, which secures the inner rail to the chassis.

Step 4 Secure the inner rail to the chassis with two M4 sunk screws.

Step 5 Repeat step 1 to 4 to install the other inner rail.

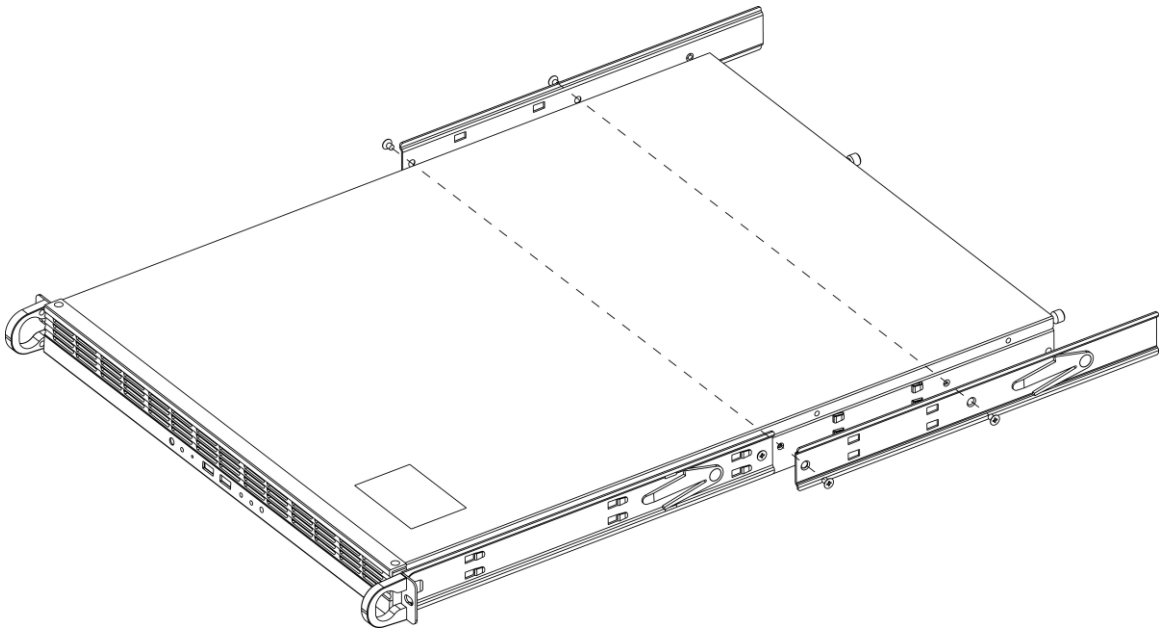

Figure 2-1 Fix Server and Inner Rails

2.3.2 Outer Rail Installation

Follow the steps to install two outer rails into rack.

Step 1 Fix the delivered M5 cage nuts in rack columns with six in front columns and four in rear.

Step 2 Hang the hooks of the front of the outer rail onto the slots on the front of the rack.

Step 3 Use M5 × 10 screw to secure the rear end of outer rails to the rack.

Step 4 Pull out the rear of the outer rail, adjusting the length until it fits the rear column.

Step 5 Hang the hooks of the rear portion of the outer rail onto the slots on the rear of the rack. Use M5 × 10 screw to secure the rear of the outer rail to the rear of the rack.

Step 6 Repeat the above the steps to fix the other outer rail.

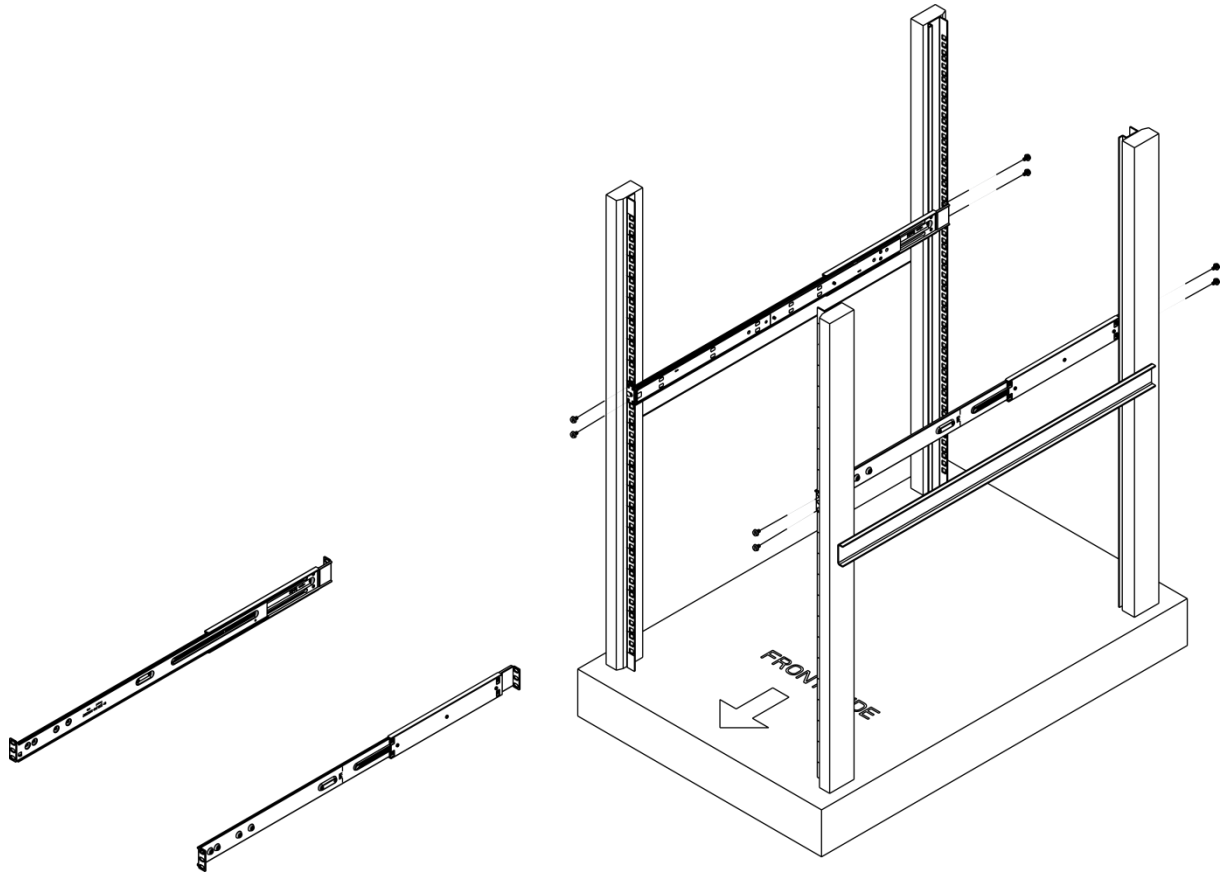

Figure 2-2 Install Outer Rails

2.3.3 Installing Server into a Rack

Before you start:

Confirm that the inner rails are properly installed on the chassis and the outer rails are correctly installed on the rack.

Step 1 Align the chassis inner rails with the front of the outer rails.

Step 2 Slide the server into the rear of the rack along the outer rail.

Step 3 Fix the server and outer guide rail with screws.

NOTE

If you need to pull out the server from the rack, push the left locking tab in inner rail upwards and then push the left one downwards.

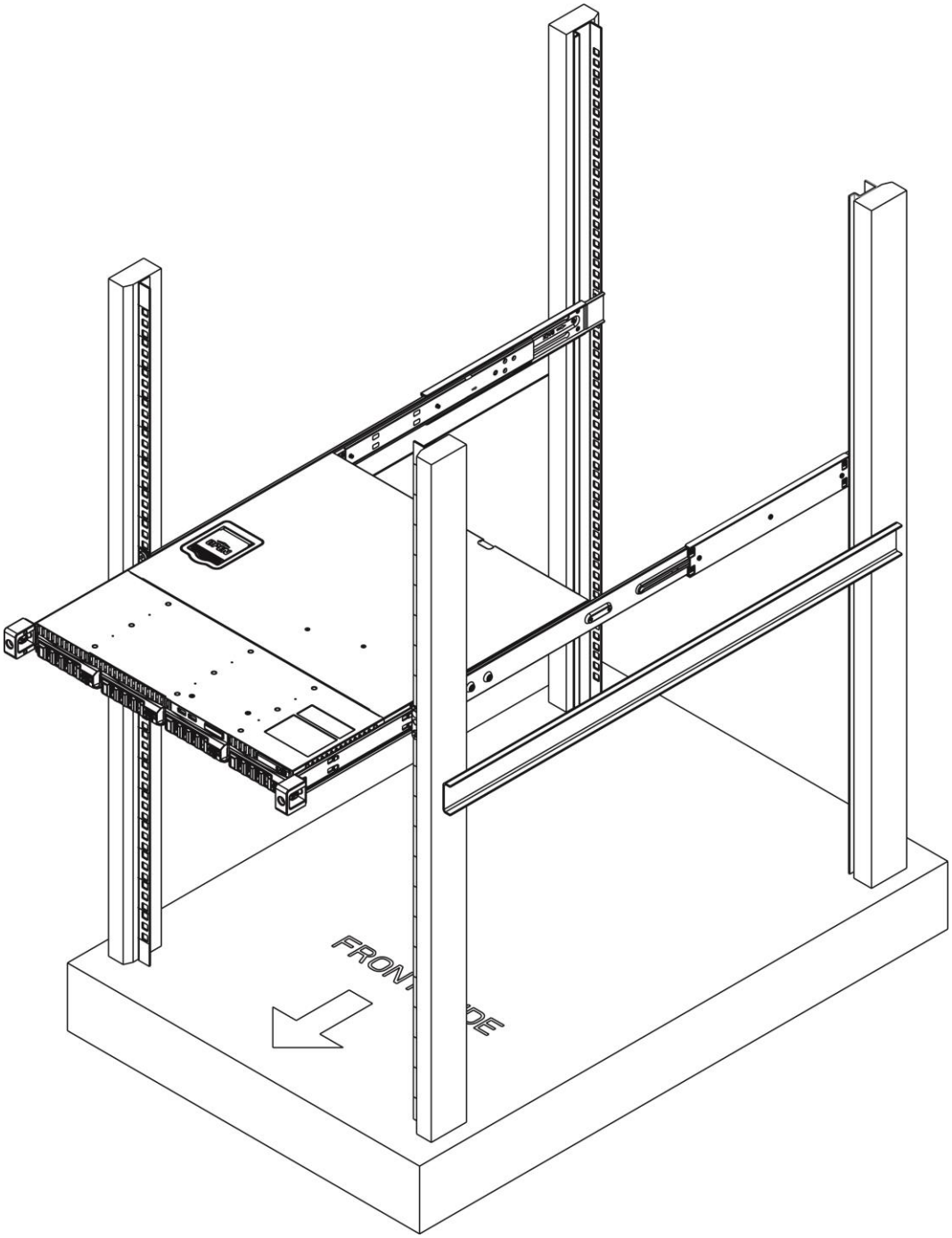

Figure 2-3 Installing Server into Rack

0304091060928

See Far, Go Further

UD07938B