GeoVision inc
The Vision of Security

GV-A/T/EBD Series IP Camera Mount

Installation Guide

- GV-Mount107
- GV-Mount113
- GV-Mount114
- GV-Mount208-5
- GV-Mount210-3
- GV-Mount211-12
- GV-Mount211P
- GV-Mount212P
- GV-Mount213
- GV-Mount300-2 / 310-2
- GV-Mount312
- GV-Mount313
- GV-Mount420
- GV-Mount440
- GV-Mount480
- GV-Mount504
- GV-Mount511
- GV-Mount704
- GV-Mount924

Before attempting to connect or operate this product,
please read these instructions carefully and save this manual for future use.

ATEBDSERIES-MI-D

© 2025 GeoVision, Inc. All rights reserved.
Under the copyright laws, this manual may not be copied, in whole or in part, without the written consent of GeoVision.

Every effort has been made to ensure that the information in this manual is accurate. GeoVision, Inc. makes no expressed or implied warranty of any kind and assumes no responsibility for errors or omissions. No liability is assumed for incidental or consequential damages arising from the use of the information or products contained herein. Features and specifications are subject to change without notice.

GeoVision, Inc.
9F, No. 246, Sec. 1, Neihu Rd.,
Neihu District, Taipei, Taiwan
Tel: +886-2-8797-8377
Fax: +886-2-8797-8335
http://www.geovision.com.tw

Trademarks used in this manual: *GeoVision*, the *GeoVision* logo and GV series products are trademarks of GeoVision, Inc. *Windows* is the registered trademark of Microsoft Corporation.

May 2025

Scan the following QR codes for product warranty and technical support policy:

[Warranty] **[Technical Support Policy]**

Contents

Preface ii

Chapter 1 Installing Multi-Sensor Camera 1

1.1 Pendant Adapter Plate GV-Mount113 1

1.2 Pendant Mounting 2

1.2.1 Pendant Mounting with GV-Mount107 2

1.2.2 Pendant Mounting with GV-Mount114 5

1.3 Wall Mounting 7

1.3.1 Wall Mounting with GV-Mount211-12 7

1.3.2 Wall Pendant Mounting with GV-Mount210-3 9

1.4 Convex Corner Mounting 12

1.4.1 Convex Corner Mounting with GV-Mount312 12

1.4.2 Convex Corner Mounting with GV-Mount313 14

1.5 Pole Mounting 16

1.5.1 Pole Mounting with GV-Mount420 16

1.5.2 Pole Mounting with GV-Mount480 18

1.6 Wall Box Mounting 20

1.6.1 Wall Box Mounting with GV-Mount511 20

1.7 Swan Neck Mounting 23

1.7.1 Swan Neck Mounting with GV-Mount208-5 23

Chapter 2 Installing Eyeball Dome / Vandal Proof Dome 25

2.1 Pendant Mounting with GV-Mount107 25

2.2 Junction Box Mounting with GV-Mount211P 27

2.3 Convex / Concave Corner Mounting with GV-Mount 300-2 / 310-2 32

2.4 Pole Mounting with GV-Mount420 34

2.5 Wall / Ceiling Box Mounting with GV-Mount 213 / 212P 37

2.6 Power Box Mounting with GV-Mount924 40

Chapter 3 Installing Bullet Camera 42

3.1 Convex / Concave Corner Mounting with GV-Mount300-2 / 310-2 42

3.2 Wall Box Mounting with GV-Mount504 44

3.3 Pole Mounting with GV-Mount440 47

3.4 Power Box Mounting with GV-Mount924 49

Preface

Welcome to the *GV-A/T/EBD Series IP Camera Mount Installation Guide*.

This Installation Guide is designed for the following models:

Model	Model Number
Bullet IP Camera	GV-TBL2718
Multi-Sensor IP Camera	GV-TMS8800 / 20811
Panoramic IP Camera	GV-EBDP5800 / 8800
	GV-TBLP5800 / 8800
Vandal Proof IP Camera	GV-TVD2712

Chapter 1 Installing Multi-Sensor Camera

1.1 Pendant Adapter Plate GV-Mount113

GV-Mount113 is a pendant adapter plate designed to be used with other mounts. It is not intended for standalone use.

GV-Mount113 Packing List

1. GV-Mount113 Pendant Adapter Plate	2. M4 Screw (12 mm) x 4

Applicable Models

- **GV-TMS20811**: GV-Mount113 must be used with GV-Mount114, GV-Mount208-5, or GV-Mount210-3.

GV-Mount113 Installation

- For Pendant Mounting using GV-Mount114, see *1.2.2 Pendant Mounting with GV-Mount114*.
- For Wall Mounting using GV-Mount210-3, see *1.3.2 Wall Pendant Mounting with GV-Mount210-3*.
- For Swan Neck Mounting using GV-Mount208-5, see *1.7.1 Swan Neck Mounting with GV-Mount208-5*.

1.2 Pendant Mounting

1.2.1 Pendant Mounting with GV-Mount107

The mounting requires GV-Mount107 and GV-Mount511.

GV-Mount107 Packing List

1. GV-Mount107	2. Pendant Mount Bracket
3. Pendant Tube	4. Tube Connector
5. Torx Wrench	

Applicable Models

- **GV-TMS8800**: GV-Mount107 must be used with GV-Mount511.

Note: Before installing GV-Mount107, note the following:

- Prepare 3 long screws for securing the Pendant Bracket to the ceiling.
- GV-Mount107 optionally extends with GV-Mount704.

GV-Mount107 + GV-Mount511 Installation

1. Place GV-Mount107 on the ceiling and mark the location for the center socket and the 3 screws.
2. Drill the marks and secure the Pendant Bracket onto the ceiling.

3. Attach one end of the Pendant Tube to the Pendant Bracket, and the other end to the Tube Connector.
4. Thread the necessary wires from the ceiling through the Pendant Tube.
5. Mount and tighten GV-Mount511 onto the Tube Connector of GV-Mount107.

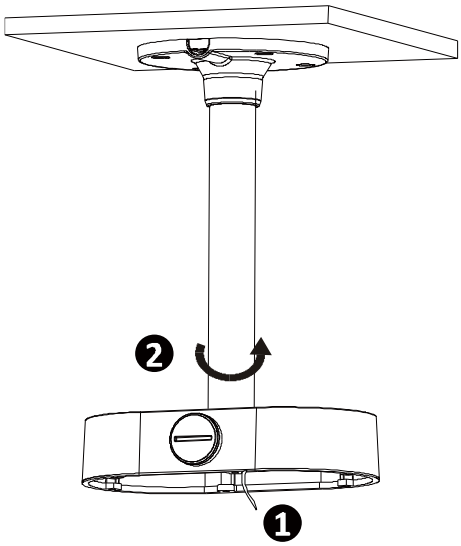

6. Connect the camera tail cables with the wires led out at *Step 4.*

7. Fix the camera base to GV-Mount511, adjust the lens angle, and fix the housing to the camera base.

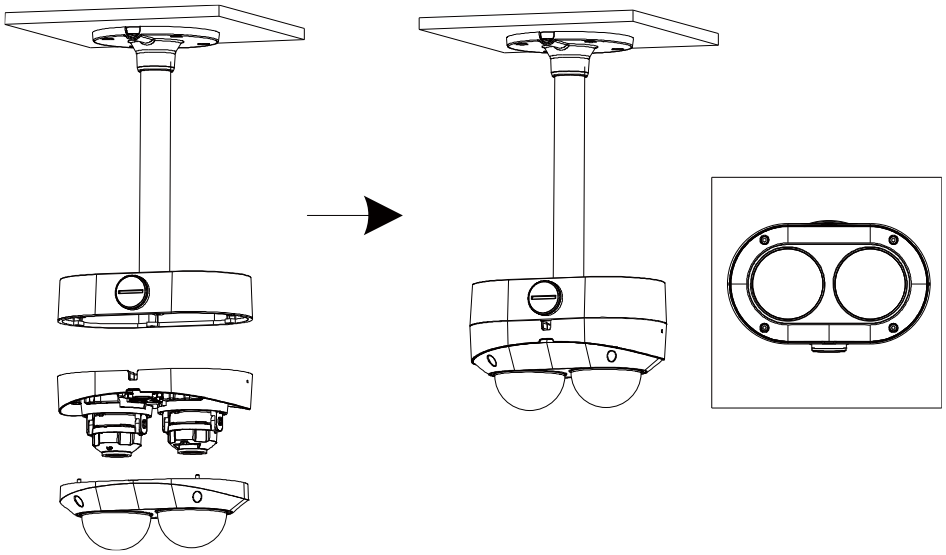

Caution: Do not pull hard when leading the tail cables; otherwise, it will cause loose or disconnected tail cables.

1.2.2 Pendant Mounting with GV-Mount114

The mounting requires GV-Mount114 and GV-Mount113.

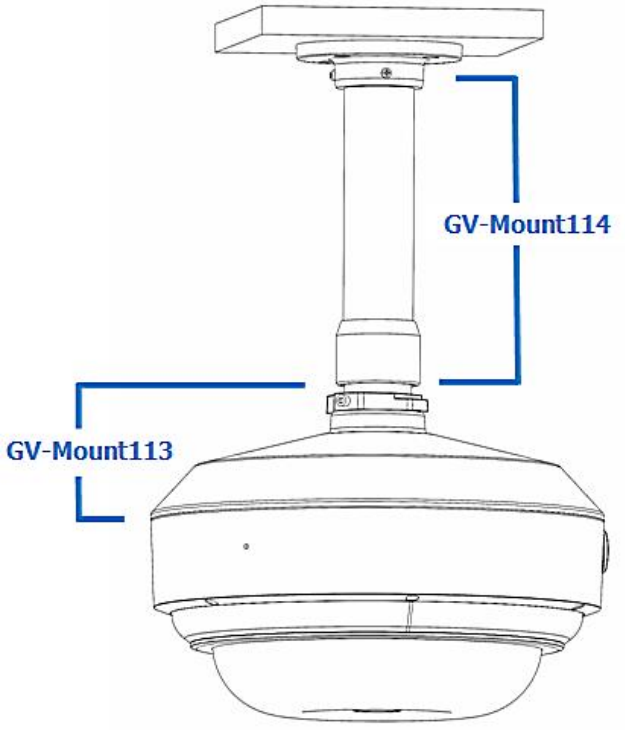

GV-Mount114 Packing List

1. GV-Mount114 Pendant Mount	2. M8 Screw Anchor (80 mm) x 4
3. Drill Template Paster	

Applicable Models

- **GV-TMS20811**: GV-Mount114 must be used with GV-Mount113.

GV-Mount114 + GV-Mount113 Installation

1. Stick the drill template paster to the ceiling and drill holes on the ceiling according to the drill template.
2. Insert the screw anchors in the ceiling.
3. Secure the GV-Mount114 pendant mount to the ceiling.
4. Mount the GV-Mount113 adapter plate by referring to Steps 2 to 3 in *1.3.2 Wall Pendant Mounting with GV-Mount210-3*.
5. Mount the camera base and cover by referring to Steps 4 to 8 in *8.3.2 GV-TMS20811* in the *Quick Start Guide*.

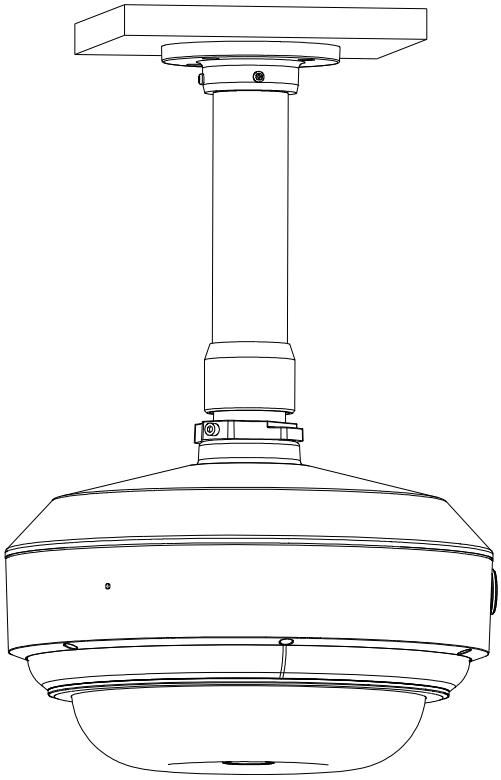

1.3 Wall Mounting

1.3.1 Wall Mounting with GV-Mount211-12

The mounting requires GV-Mount211-12.

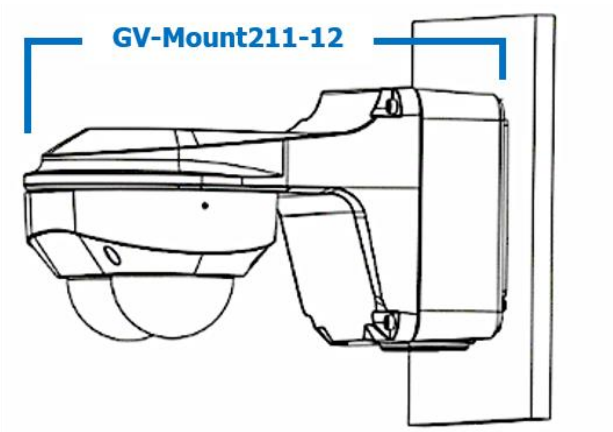

GV-Mount211-12 Packing List

1. GV-Mount211-12	2. Long Screw (47 mm) x 5
3. Short Screw (10 mm) x 4	4. Screw Anchor x 5
5. Drill Template Paster	

Applicable Models

- GV-TMS8800

GV-Mount211-12 Installation

1. Unscrew the bottom of GV-Mount211-12 to separate the two parts.
2. Drill 4 mounting holes on the wall using the drill template paster.
3. Secure the bottom of GV-Mount211-12 to the wall using the supplied long screws.
4. Unscrew the four screws of the camera to remove the housing from the camera base.

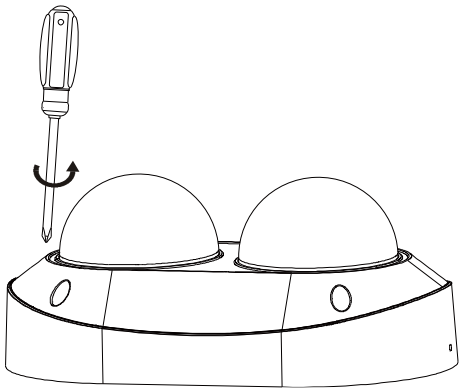

5. Thread the necessary wires through GV-Mount211-12.
6. Secure the camera bottom onto the upper part of GV-Mount211-12 using the supplied short screws as indicated below.

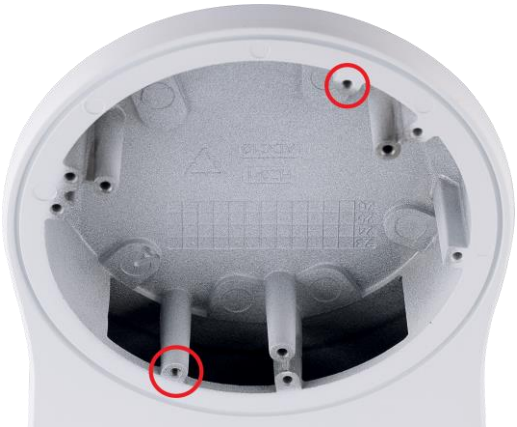

7. Fix the housing to the camera base and assemble GV-Mount211-12 to complete the installation.

1.3.2 Wall Pendant Mounting with GV-Mount210-3

The mounting requires GV-Mount210-3 and GV-Mount113.

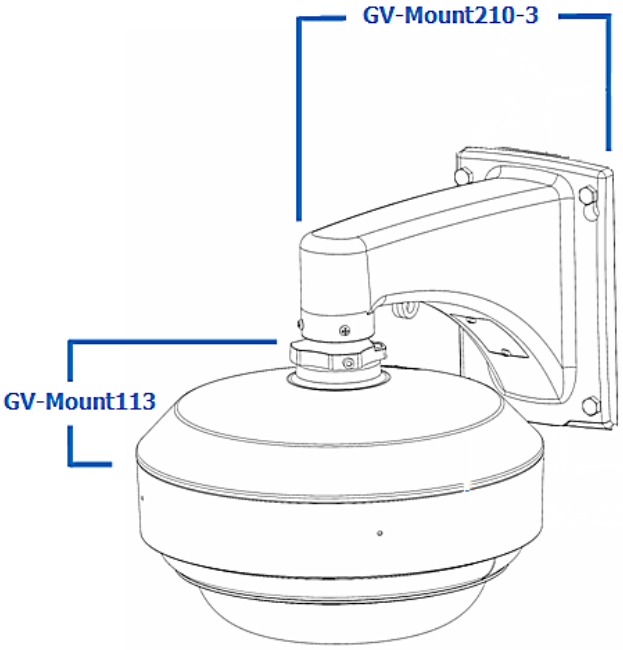

GV-Mount210-3 Packing List

1. GV-Mount210-3 Wall Pendant Mount	2. M8 Screw Anchor (80 mm) x 4
3. Drill Template Paster	4. Rubber Pad

Applicable Models

- **GV-TMS20811**: GV-Mount210-3 must be used with GV-Mount113.

GV-Mount210-3 + GV-Mount113 Installation

1. Secure the GV-Mount210-3 wall mount bracket.
   (1) Locate the positions of the holes according to the 4 screw holes on the bracket. Drill 4 expansion screw holes on the wall and insert the expansion screws.
   (2) Lead cables through the bracket hole.
   (3) Align the bracket holes with the expansion screws, and insert the expansion screws into the bracket holes. Insert the flat washer and hex nuts into the screws, and tighten the hex nuts to secure the bracket on the wall with the hex key.

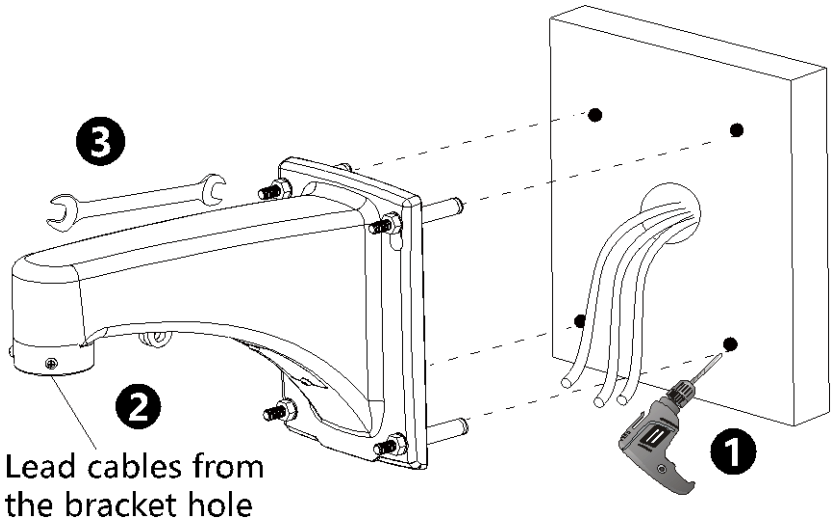

2. Align the holes of the GV-Mount113 adapter plate with those of the mounting plate, and secure them with four screws using the hex key or a Torx screwdriver.

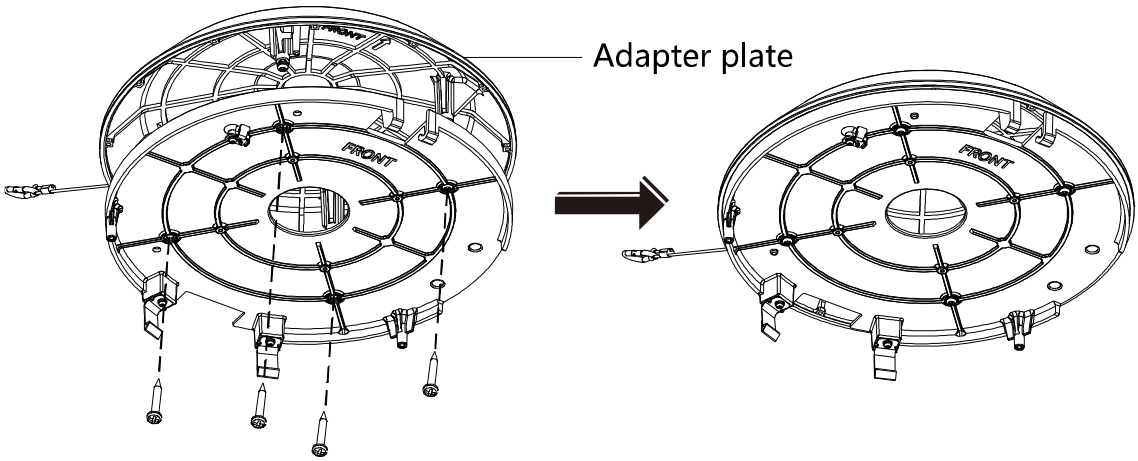

Note: The adapter plate with the FRONT logo should face the ground during installation.

3. Mount the GV-Mount113 adapter plate.
   (1) Hang the safety rope on the lock nut.
   (2) Align the locknut on the GV-Mount113 adapter plate with the GV-Mount210-3 wall mount bracket, tighten the locknut in reverse direction (relative to the installation direction of the adapter plate), and tighten the screws on the bracket and the hex nuts on the locknut with the hex key and a Philips screwdriver.

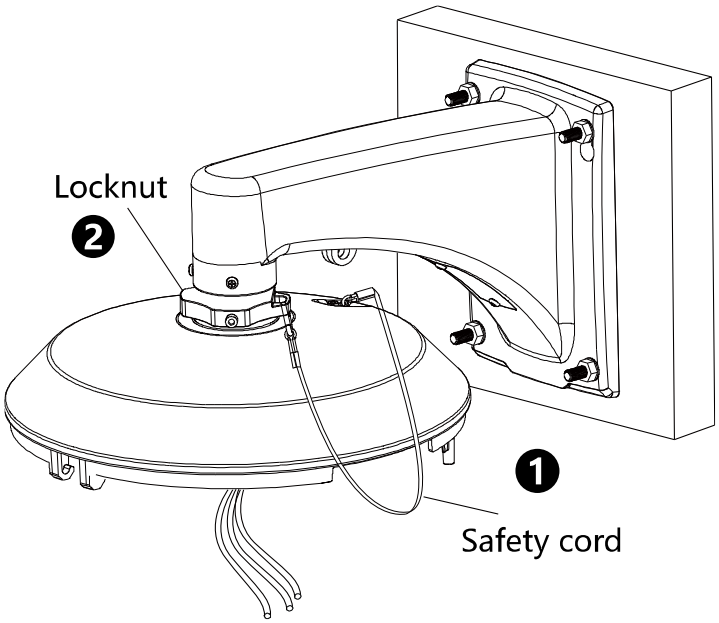

4. Mount the camera base and cover by referring to Steps 4 to 10 in *8.3.2 GV-TMS20811* in the *Quick Start Guide*.

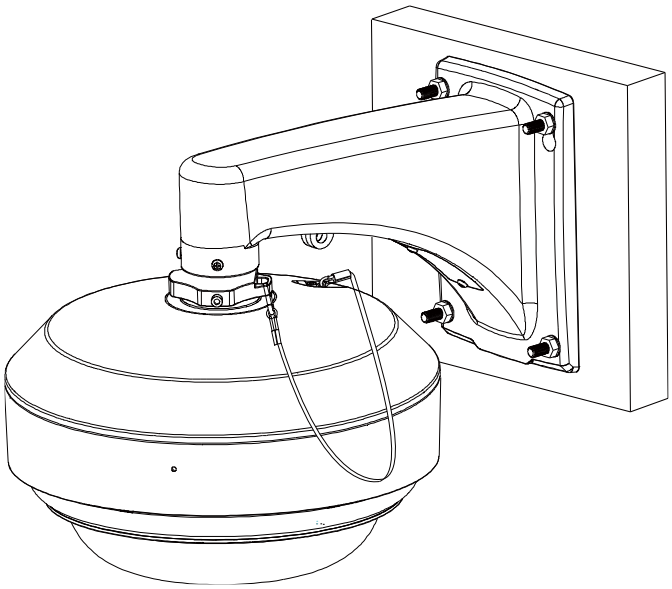

1.4 Convex Corner Mounting

1.4.1 Convex Corner Mounting with GV-Mount312

The mounting requires GV-Mount312 and GV-Mount211-12.

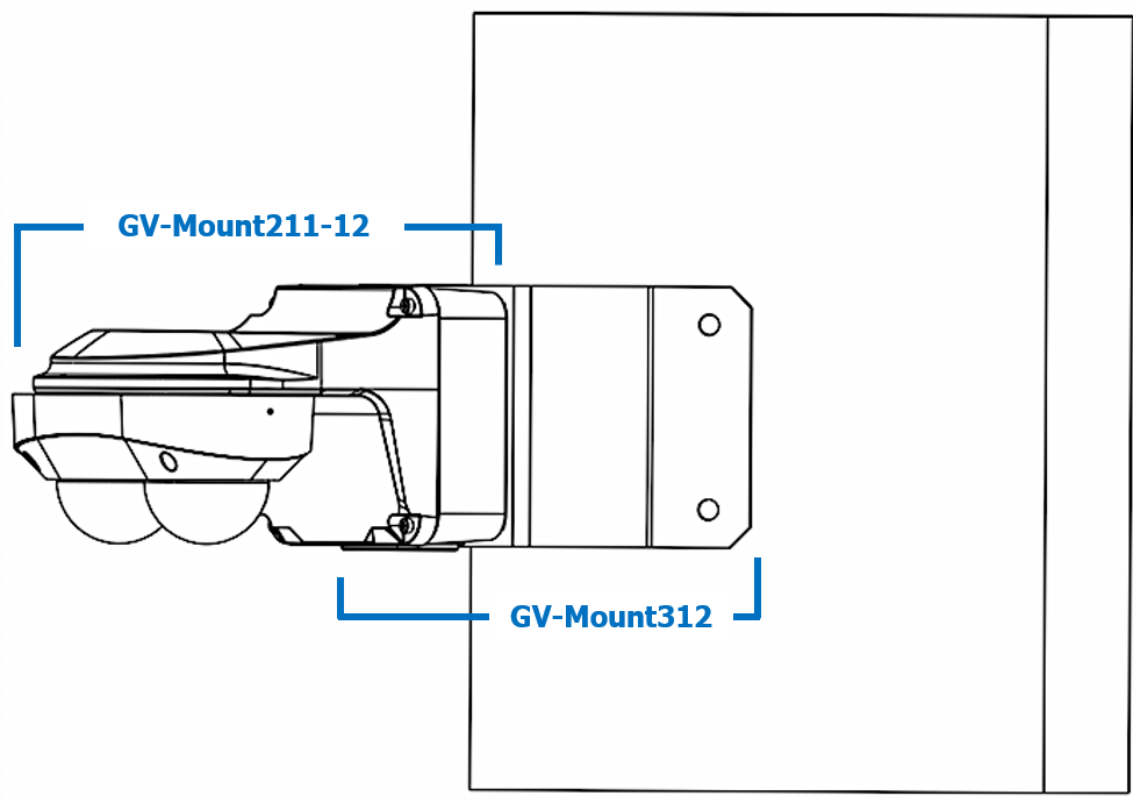

GV-Mount312 Packing List

1. GV-Mount312	2. M4 Screw (20 mm) x 4
3. M8 Screw (80 mm) x 4	

Applicable Models

- **GV-TMS8800**: GV-Mount312 must be used with GV-Mount211-12.

GV-Mount312 + GV-Mount211-12 Installation

1. Drill 4 mounting holes on the corner using the drill template paster.
2. Secure GV-Mount312 to the corner using the supplied screws.
3. Unscrew the bottom of GV-Mount211-12 to separate the two parts.
4. Secure the bottom of GV-Mount211-12 onto GV-Mount312 using the supplied screws as indicated below.

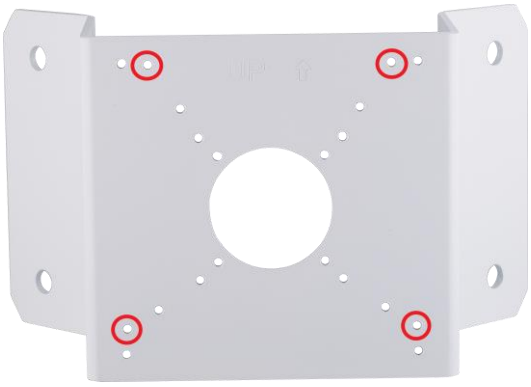

Note: Make sure the direction of the UP ↑ indicators on the 2 parts are placed pointing upward.

5. Follow Steps 4 to 7 in *1.3.1 Wall Mounting with GV-Mount211-12* to complete the installation.

1.4.2 Convex Corner Mounting with GV-Mount313

The mounting requires GV-Mount313, GV-Mount210-3, and GV-Mount113.

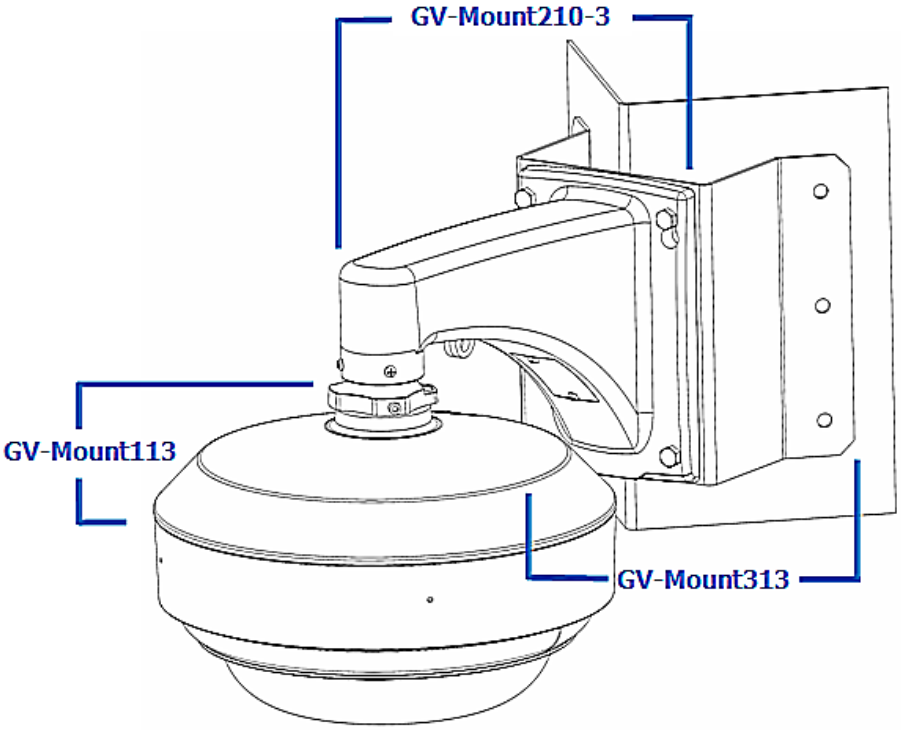

GV-Mount313 Packing List

1. GV-Mount313 Convex Corner Mount	2. M8 Screw Anchor (25 mm) x 4
3. D8 Flat Washer x 4	4. D8 Spring Washer x 4

Applicable Models

- **GV-TMS20811**: GV-Mount313 must be used with GV-Mount210-3.

Note: GV-Mount210-3 must be used with GV-Mount113.

GV-Mount313 + GV-Mount210-3 + GV-Mount113 Installation

1. Secure the GV-Mount313 corner mount bracket to the wall using the 6 screws and thread the external cables through.
2. Secure the GV-Mount210-3 wall mount bracket to the GV-Mount313 corner mount bracket by referring to Step 1 in *1.3.2 Wall Pendant Mounting with GV-Mount210-3*.
3. Mount the GV-Mount113 adapter plate by referring to Steps 2 to 3 in *1.3.2 Wall Pendant Mounting with GV-Mount210-3*.
4. Mount the camera base and cover by referring to Steps 4 to 8 in *8.3.2 GV-TMS20811* in the *Quick Start Guide*.

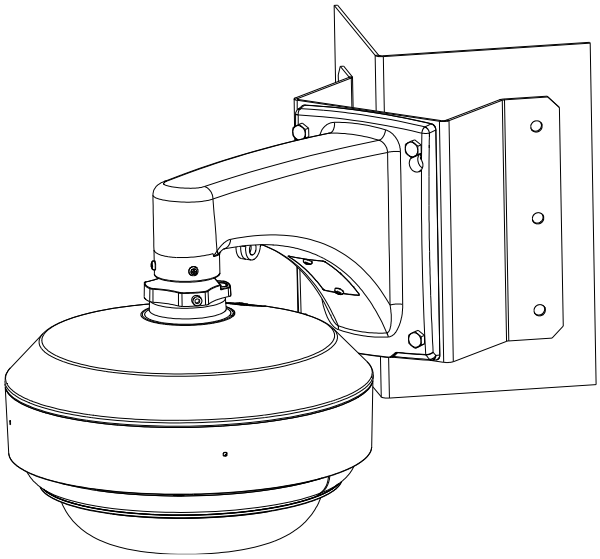

1.5 Pole Mounting

1.5.1 Pole Mounting with GV-Mount420

The mounting requires GV-Mount420 and GV-Mount211-12.

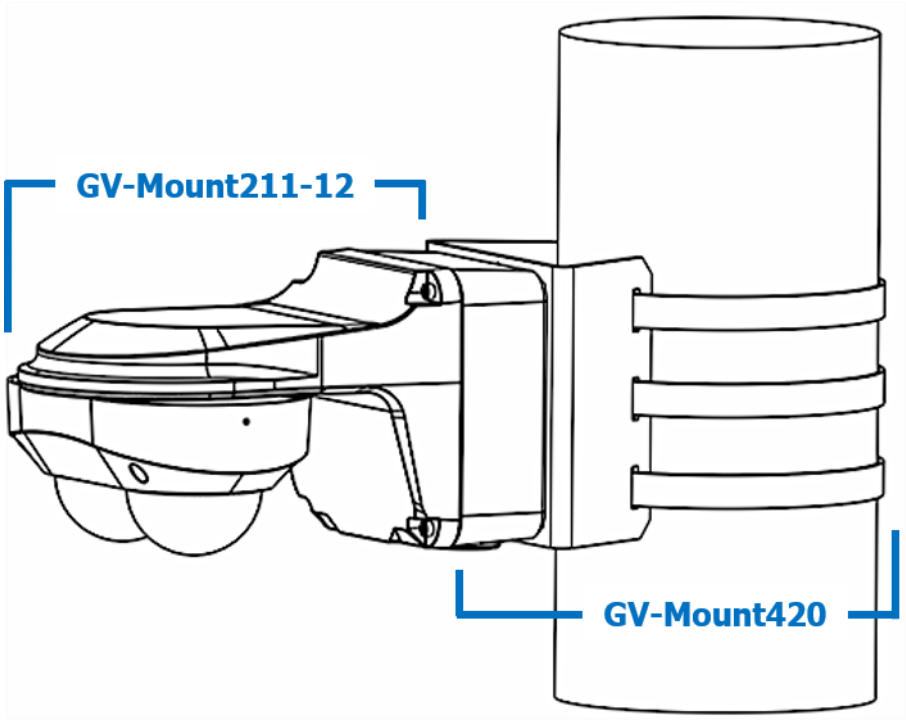

GV-Mount420 Packing List

1. GV-Mount420	2. M4 Screw x 4
3. Additional Screw Kit • M6 Screw x 4 • M6 Nut x 4 • M6 Plain Washer x 4 • M6 Split Washer x 4	

Applicable Models

- **GV-TMS8800**: GV-Mount420 must be used with GV-Mount211-12.

GV-Mount420 + GV-Mount211-12 Installation

1. Unscrew the bottom of GV-Mount211-12 to separate the two parts.
2. Align and attach the bottom of GV-Mount211-12 to GV-Mount420 using the supplied screws as indicated.

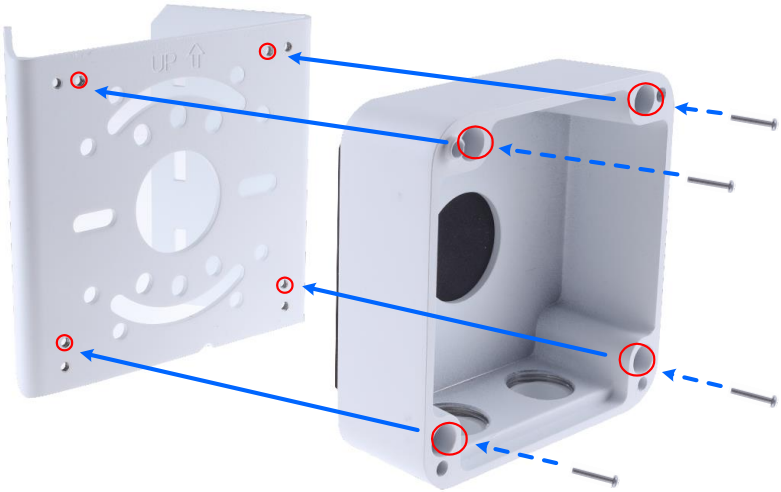

Note: Make sure the direction of the UP ↑ indicators on the 2 parts are placed pointing upward.

3. Thread the 3 steel straps onto the back plate.

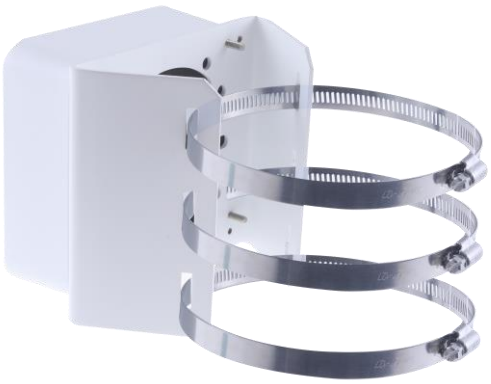

4. Follow Steps 4 to 7 in *1.3.1 Wall Mounting with GV-Mount211-12* to assemble GV-Mount211-12.
5. Secure the camera onto the desired pole by tightening the steel straps.

1.5.2 Pole Mounting with GV-Mount480

The mounting requires GV-Mount480, GV-Mount210-3, and GV-Mount113.

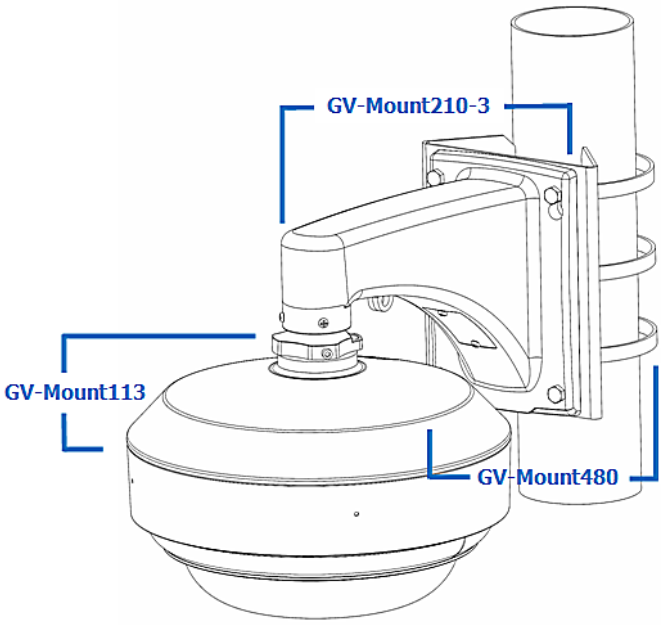

GV-Mount480 Packing List

1. GV-Mount480 Pole Mount Bracket	2. Clamp x 3
3. M8 Screw Anchor (25 mm) x 4	4. D8 Flat Washer x 4
5. D8 Spring Washer x 4	

Applicable Models

- **GV-TMS20811**: GV-Mount480 must be used with GV-Mount210-3.

Note: GV-Mount210-3 must be used with GV-Mount113.

GV-Mount480 + GV-Mount210-3 + GV-Mount113 Installation

1. Secure the GV-Mount480 pole mount bracket using the hoop and thread the external cables through.
2. Secure the GV-Mount210-3 wall mount bracket to the GV-Mount480 pole mount bracket by referring to Step 1 in *1.3.2 Wall Pendant Mounting with GV-Mount210-3*.
3. Mount the GV-Mount113 adapter plate by referring to Steps 2 to 3 in *1.3.2 Wall Pendant Mounting with GV-Mount210-3*.
4. Mount the camera base and cover by referring to Steps 4 to 8 in *8.3.2 GV-TMS20811* in the *Quick Start Guide*.

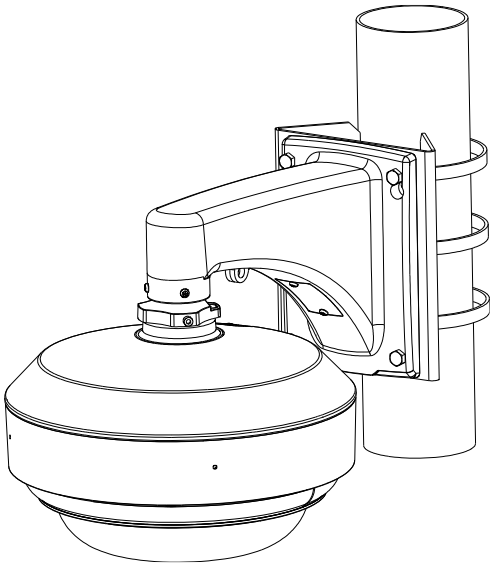

1.6 Wall Box Mounting

1.6.1 Wall Box Mounting with GV-Mount511

The mounting requires GV-Mount511.

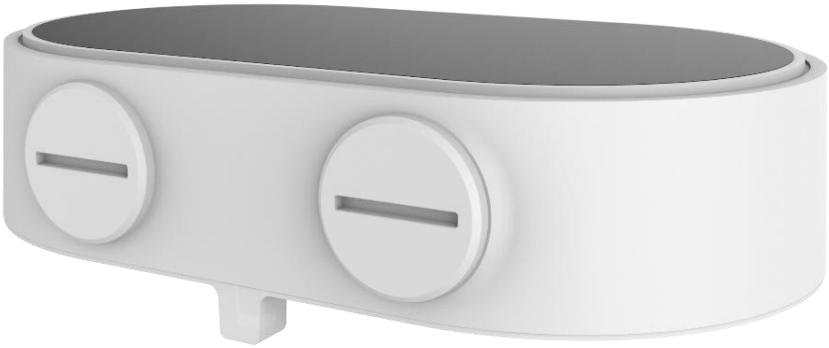

GV-Mount511 Packing List

1. GV-Mount511	2. M3 Screw (25 mm) x 4
3. M3 Screw (12 mm) x 2	4. Screw Anchor x 4
5. Drill Template Paster	

Applicable Models

- GV-TMS8800

GV-Mount511 Installation

1. Drill 4 mounting holes and a hole at the center socket location on the wall using the drill template paster.
2. Insert 4 screw anchors to the mounting screw location and secure GV-Mount511 to the wall with the supplied screws. Note that the knobs should point down.

Knobs point down

3. Unscrew the four screws of the camera to remove the housing from the camera base.

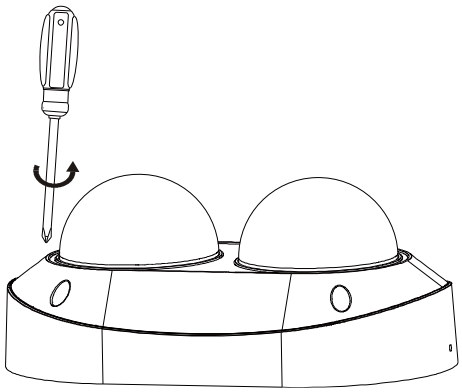

4. Cut open GV-Mount511 base and thread the camera cables through the center socket and waterproof the Ethernet cable. For details, see *1.10 Waterproofing the Cable* in the User's Manual.
5. Fit the cables into GV-Mount511.

6. Secure the camera base onto GV-Mount511 using the 2 supplied screws as indicated below:

7. Adjust the camera lens angles if necessary, and fix the housing to the camera base.

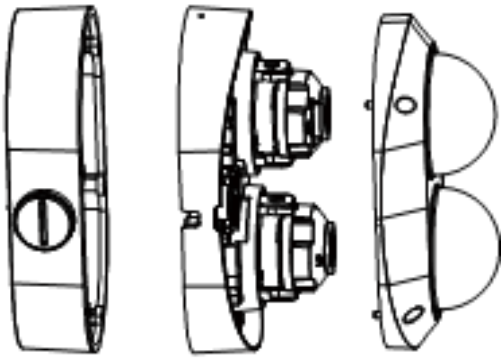

1.7 Swan Neck Mounting

1.7.1 Swan Neck Mounting with GV-Mount208-5

The mounting requires GV-Mount208-5 and GV-Mount113.

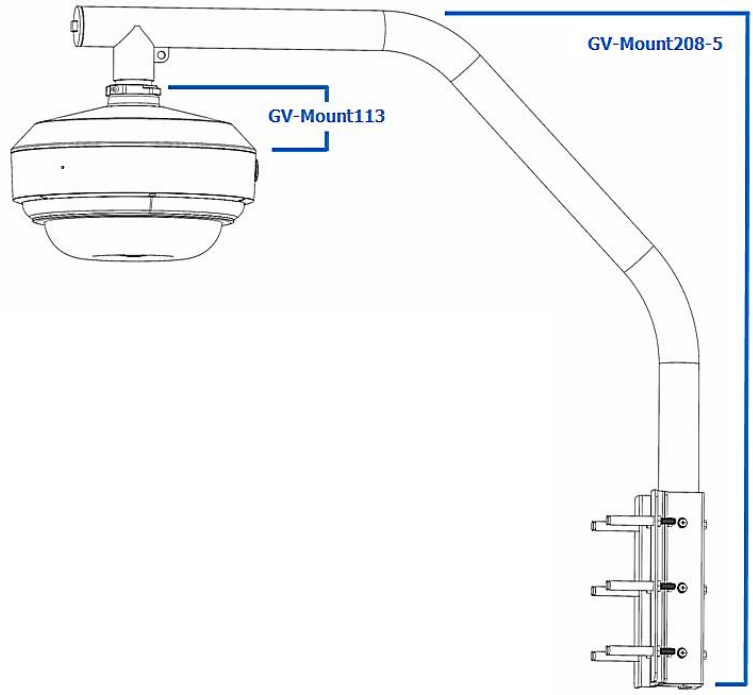

GV-Mount208-5 Packing List

1. GV-Mount208-5 Swan Neck Mount	2. M8 Screw Anchor (90 mm) x 6

Applicable Models

- **GV-TMS20811**: GV-Mount208-5 must be used with GV-Mount113.

GV-Mount208-5 + GV-Mount113 Installation

1. Secure the GV-Mount208-5 swan neck mount.
2. Align the GV-Mount113 adapter plate with the holes in the mounting plate and tighten the four screws with the matching wrench or hexagonal screwdriver, installing the mounting plate with the side with the “FRONT” logo facing downward (the opposite side of the adapter plate).
3. Attach the safety cord to the locknut.
4. Align the counter-locking nut on the GV-Mount113 adapter plate with the GV-Mount208-5 swan neck mount, tighten the counter-locking nut in the opposite direction (relative to the direction in which the GV-Mount113 adapter plate is mounted), and use a Phillips screwdriver and wrench to tighten the screws on the bracket and the hexagonal nut on the counter-locking nut.
5. Mount the camera base and cover by referring to Steps 4 to 8 in *8.3.2 GV-TMS20811* in the *Quick Start Guide*.

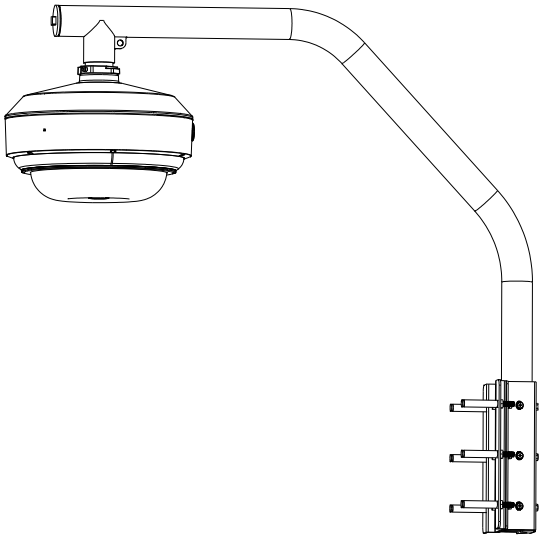

Chapter 2 Installing Eyeball Dome / Vandal Proof Dome

2.1 Pendant Mounting with GV-Mount107

The mounting requires GV-Mount107 and GV-Mount213 / 212P.
GV-Mount213 is for eyeball domes, while GV-Mount212P is for vandal proof domes.

The following illustration uses GV-Mount213 as an example:

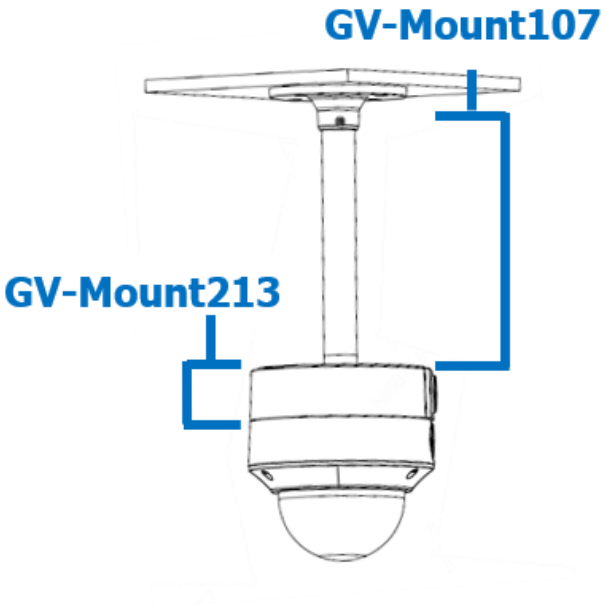

GV-Mount107 Packing List

1. Pendant Bracket	2. Pendant Tube
3. Tube Connector	4. Torx Wrench

GV-Mount213 / 212P Packing List

1. GV-Mount213 / 212P	2. Long Screw x 3
3. Short Screw x 3	4. Screw Anchor x 3

Applicable Models

- Eyeball Dome: GV-EBDP5800 / 8800
- Vandal Proof Dome: GV-TVD2712

Note: Before installing GV-Mount107, note the following:

- Install your camera on GV-Mount213 / 212P by cutting a hole in the center of the mount and thread the camera wires through.

- Prepare 3 long screws for securing the Pendant Bracket to the ceiling.
- GV-Mount107 optionally extends with GV-Mount704.

1. Place GV-Mount107 on the ceiling and mark the location for the center socket and the 3 screws.
2. Drill the marks and secure the Pendant Bracket onto the ceiling.

3. Attach one end of the Pendant Tube to the Pendant Bracket, and the other end to the Tube Connector.
4. Connect the wires from the ceiling to the camera through the Pendant Tube.

5. Push and arrange the connected wires inside Mount213 / 212P.
6. Secure the camera onto the Tube Connector.

2.2 Junction Box Mounting with GV-Mount211P

The mounting requires GV-Mount211P.

GV-Mount211P Packing List

1.	GV-Mount211P	2.	Long Screw x 5
3.	Short Screw x 4	4.	Screw Anchor x 5
5.	Plastic PG21 Conduit Connector	6.	Drill Template Paster

Applicable Models

<u>Eyeball Dome</u>

- GV-EBD2702 / 2704 / 2705 / 4700 / 4701 / 4704 / 4711 / 4712 / 4813 / 8700 / 8711 / 8800 / 8813
- GV-EBDP5800 / 8800
- GV-EBFC5800

<u>Vandal Proof Dome</u>

- GV-TVD2712

GV-Mount211P Installation

1. Unscrew the bracket.

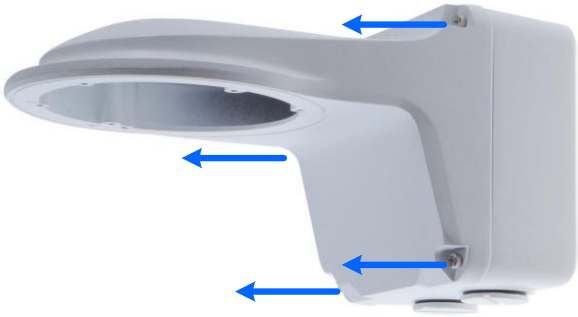

2. Loosen the indicated area by turning it anticlockwise.

3. Stick the drill template paster to the wall with the arrow pointing up.
4. Drill 4 holes according to the sticker and insert the 4 screw anchors to the 4 holes.
5. Secure the power box to the wall with 4 long screws.

6. Remove the bottom ring by turning it anticlockwise.

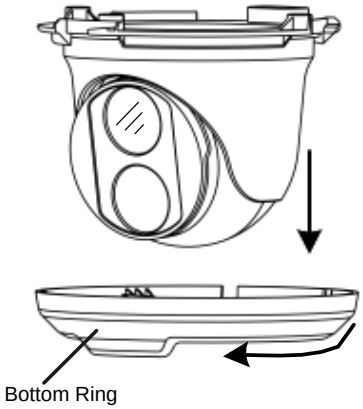

7. Secure the camera to the wall mount bracket with the provided short screws according to the screw position for each model:

GV-EBDP5800 / 8800

GV-EBD2702 / 2704

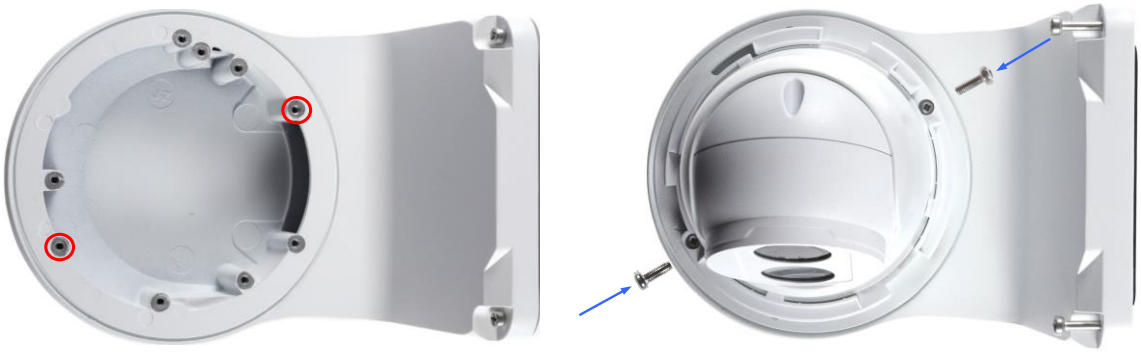

8. Thread the Ethernet cable through the PG21 conduit connector and the power box as shown in No. 8, *Step 10*. Then connect the cable to the camera.
9. Rotate the plastic ring to secure the conduit connector to the power box. Screw in the cap as shown in No. 9, *Step 10*.
10. Screw the wall mount bracket to the power box as shown in No. 10 in the figure below.

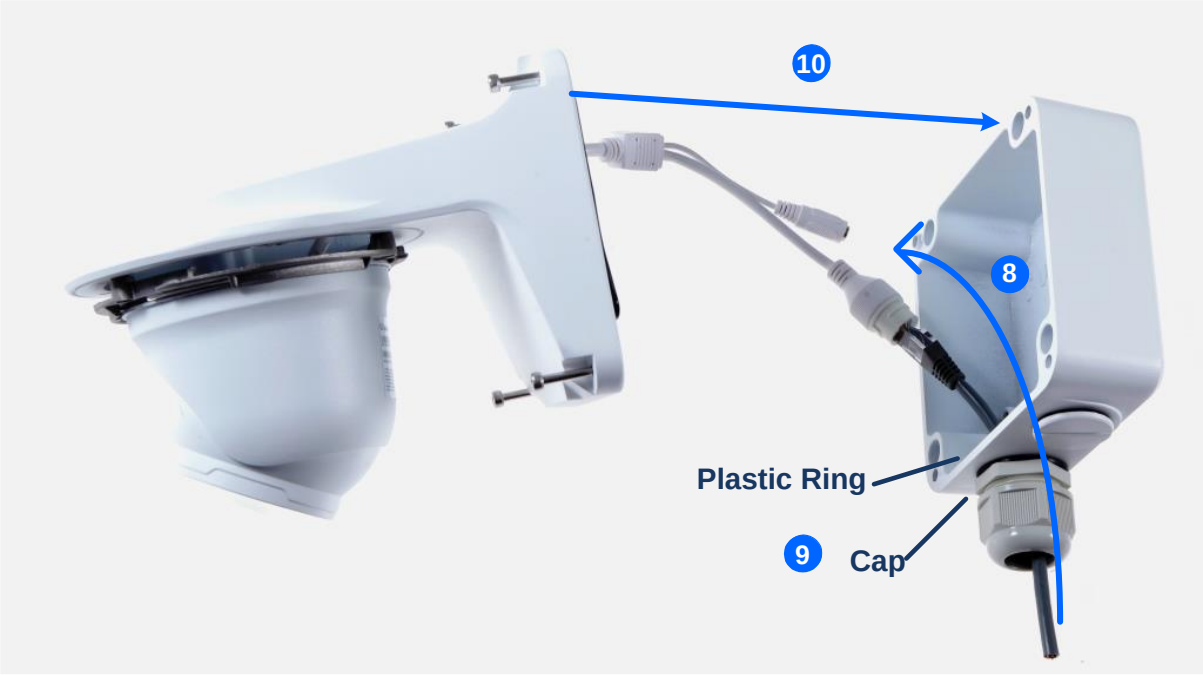

11. Mount the bottom ring.

2.3 Convex / Concave Corner Mounting with GV-Mount 300-2 / 310-2

The mounting requires GV-Mount211P and GV-Mount300-2 / 310-2.
GV-Mount300-2 is for convex corner mounting, while GV-Mount310-2 is for concave corner installation.

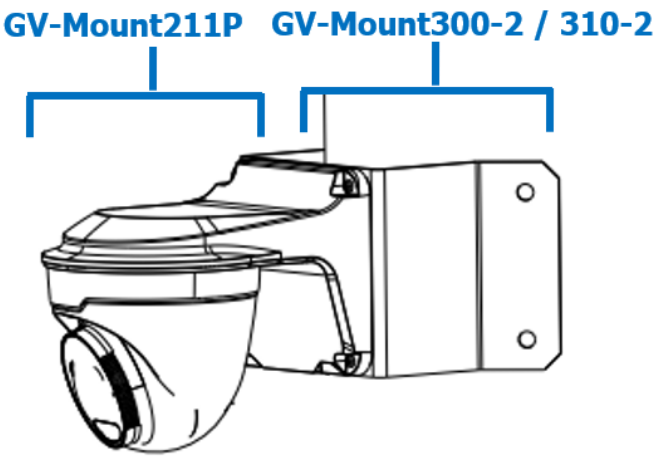

GV-Mount300-2 / 310-2 Packing List

1. Mounting Bracket	2. Convex / Concave Mounting Plate x 2
3. Carriage Bolt x 6	4. 1/4” Plain Washer x 6
5. 1/4” Flange Nut x 6	6. M4 Screw (25 mm) x 4
7. M4 Plain Washer x 4	8. M4 Flange Nut x 4
9. M3 Screw (15 mm) x 4	10. M3 Plain Washer x 4
11. M3 Flange Nut x 4	

Applicable Models

- Eyeball Dome: GV-EBDP5800 / 8800
- Vandal Proof Dome: GV-TVD2712

GV-Mount211P + GV-Mount300-2 / 310-2 Installation

1. To install the camera to the GV-Mount211P junction box, see *2.2 Junction Box Mounting*.
2. Assemble the GV-Mount300-2 / 310-2, by attaching the two mounting plates onto the mounting bracket with the supplied carriage bolts, 1/4” plain washers, and 1/4” flange nuts.

3. Position and secure GV-Mount211P to GV-Mount300-2 / 310-2 as indicated below.

4. Secure your camera to the GV-Mount211P to complete the installation.

2.4 Pole Mounting with GV-Mount420

The mounting requires GV-Mount211P and Mount420.

GV-Mount420 Packing List

1. GV-Mount420	2. M4 Screw x 4
3. Additional Screw Kit • M6 Screw x 4 • M6 Nut x 4 • M6 Plain Washer x 4 • M6 Split Washer x 4	

Applicable Models

- Eyeball Dome: GV-EBDP5800 / 8800
- Vandal Proof Dome: GV-TVD2712

GV-Mount211P + Mount420 Installation

1. Unscrew the bracket.

2. Loosen the indicated area by turning it anticlockwise.

3. Align and attach the power box to the back plate using the 4 supplied M4 screws as indicated.

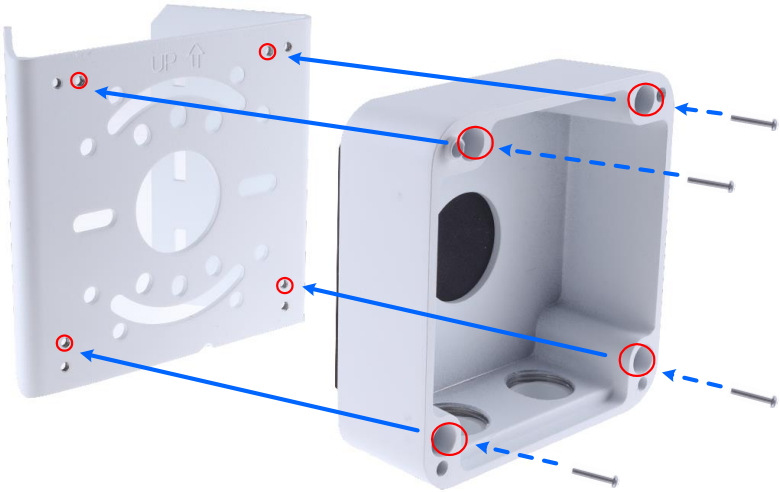

Note: Make sure the direction of the "up ↑" indicator on the back plate match that of the power box.

4. Thread the 3 steel straps onto the back plate.

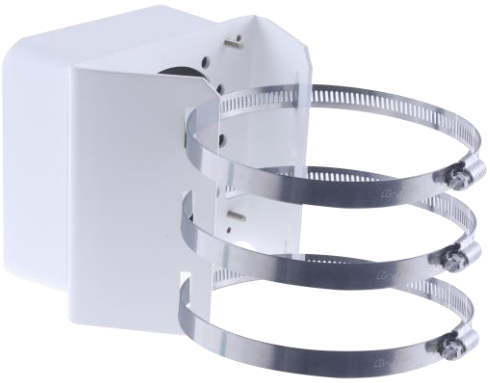

5. To install the camera to the GV-Mount211P junction box, follow Steps 6 to 12 in *2.2 Junction Box Mounting with GV-Mount211P.*

6. Secure the camera onto the desired pole by tightening the steel straps.

2.5 Wall / Ceiling Box Mounting with GV-Mount 213 / 212P

The mounting requires GV-Mount213 or GV-Mount212P.

GV-Mount213 is for eyeball domes, while GV-Mount212P is for vandal proof domes.

The following illustration uses GV-Mount213 as an example:

GV-Mount213 / 212P Packing List

1. GV-Mount213 / 212P	2. Long Screw x 3
3. Short Screw x 3	4. Screw Anchor x 3

Applicable Models

- Eyeball dome: GV-EBDP5800 / 8800
- Vandal Proof Dome: GV-TVD2712

GV-Mount213 / 212P Installation

1. Attach the GV-Mount to the wall / ceiling and use a marker to mark the location for the center socket and the 3 screws.

2. Drill 3 holes according to the screw locations. Then, drill a bigger hole at the center socket location for the Ethernet cable.
3. Insert 3 screw anchors to the screw locations and secure GV-Mount to the wall / ceiling with 3 long screws.
4. Thread the Ethernet cable through the center socket and waterproof the Ethernet cable.

5. Fit the cable into the GV-Mount.
6. Remove the camera cover and fasten the camera to the wall box mount as indicated below using the supplied short screws.

7. Secure the camera cover.

Note: In addition to the abovementioned standard installation, you can also choose to run the Ethernet cable through a corrugated tube. To do this, you will have to purchase your own conduit connector and corrugated tube. 3/4” NPS is the recommended type of connector. After you secure the wall box to the desired location, remove the knob at the bottom and connect the conduit connector with a self-prepared corrugated tube to the wall box. Then, thread the Ethernet cable through the corrugated tube and waterproof the cable.

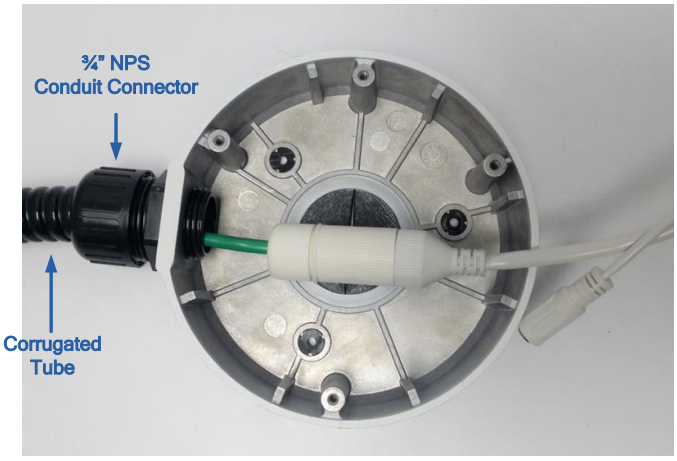

2.6 Power Box Mounting with GV-Mount924

The mounting requires GV-Mount924.

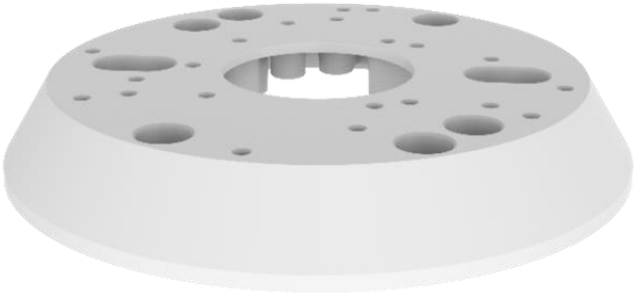

GV-Mount924 Packing List

1. GV-Mount924	2. M3 8 mm Screw x 4

Applicable Models

- GV-EBDP5800 / 8800

The mounting is only for eyeball domes.

GV-Mount924 installation

1. Secure the gang box onto the back of GV-Mount924 using the ports indicated below.

US Double Gang Box

US Single Gang Box

2. Thread the camera's cables through GV-Mount924 and secure the camera onto the mount using the ports indicated below using the supplied screws.

Chapter 3 Installing Bullet Camera

3.1 Convex / Concave Corner Mounting with GV-Mount300-2 / 310-2

The mounting requires GV-Mount504 and GV-Mount300-2 / 310-2.

GV-Mount300-2 is for convex corner mounting, while GV-Mount310-2 is for concave corner installation.

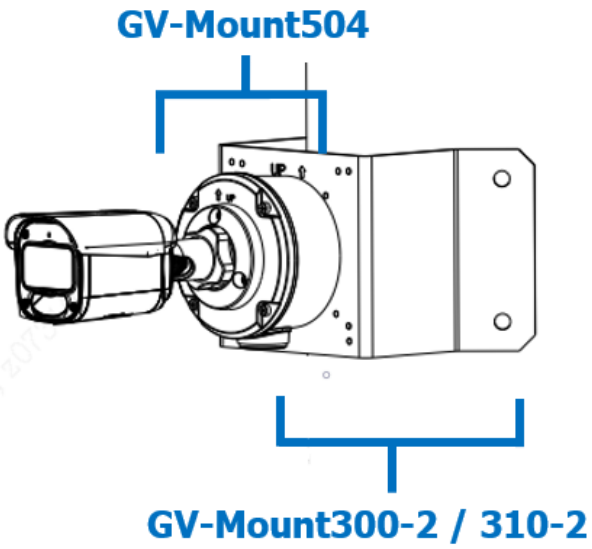

GV-Mount300-2 / 310-2 Packing List

1. Mounting Bracket	2. Convex / Concave Mounting Plate x 2
3. Carriage Bolt x 6	4. 1/4” Plain Washer x 6
5. 1/4” Flange Nut x 6	6. M4 Screw (25 mm) x 4
7. M4 Plain Washer x 4	8. M4 Flange Nut x 4
9. M3 Screw (15 mm) x 4	10. M3 Plain Washer x 4
11. M3 Flange Nut x 4	

Applicable Models

- GV-TBL2718
- GV-TBLP5800 / 8800

GV-Mount300-2 / GV-Mount310-2 + GV-Mount504 Installation

1. Follow the instructions in *3.2 Wall Box Mounting with GV-Mount504* to install the camera onto GV-Mount504.
2. Assemble GV-Mount300-2 / 310-2 by attaching the two mounting plates onto the mounting bracket with the supplied carriage bolts, 1/4” plain washers, and 1/4” flange nuts.
3. Position and secure GV-Mount504 to GV-Mount300-2 / 310-2 as indicated below.

4. Secure your GV-IP Camera to GV-Mount504 to complete the installation.

3.2 Wall Box Mounting with GV-Mount504

The mounting requires GV-Mount504.

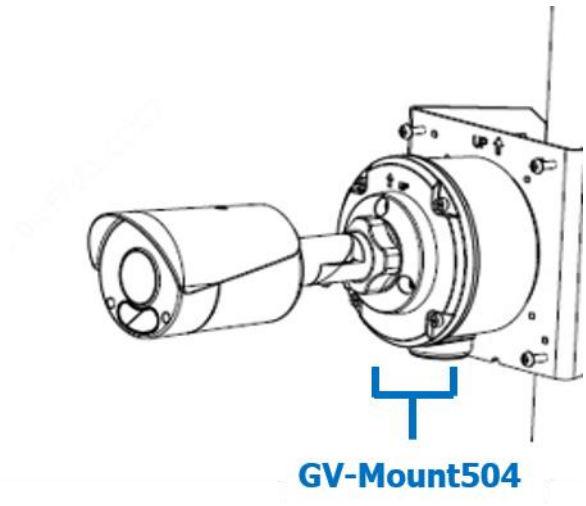

GV-Mount504 Packing List

1. GV-Mount504	2. Long Screw x 4
3. Short Screw x 3	4. Screw Anchor x 4
5. Drill Template Paster	6. Waterproof Rubber Plug
7. Plastic PG21 Conduit Connector	

Applicable Models

- GV-TBL2718
- GV-TBLP5800 / 8800

GV-Mount504 Installation

1. Unscrew the box cover.

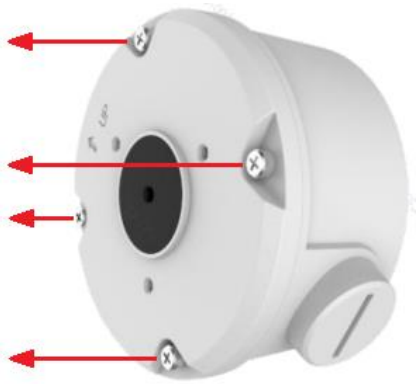

2. Stick the drill template paster to the wall with the arrow pointing up.
3. Drill the 4 mounting holes according to the drill template.
4. Insert the 4 screw anchors to the mounting holes.
5. Position the power box on the wall with the “up ↑” indicator pointing up and align the screw holes indicated below to the 4 mounting holes on the wall.

6. Secure the power box to the wall with the supplied long screws.

7. Connect the Ethernet cable using one of the two methods:

   A. Thread the Ethernet cable through the center hole.

   B. Thread the Ethernet cable through the PG21 conduit connector and the power box as shown in No 8 in the figure below.

   Rotate the plastic ring to secure the conduit connector to the power box. Secure in the cap, as shown in No 9 in the figure below.

8. Thread the camera cable through the box cover from the top, and then attach the supplied waterproof rubber plug to the camera cable at around the camera base, as shown in the figure below.

9. Press firmly to embed the waterproof plug onto the box cover.

10. Use the supplied short screws to secure the camera to the box cover at the indicated holes below.

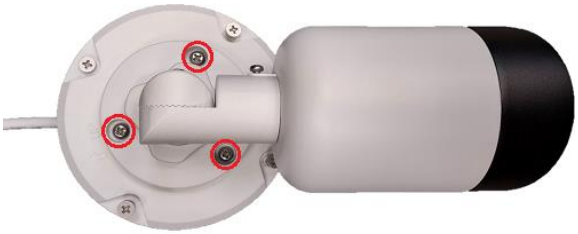

11. Connect the Ethernet cable to the camera cable, align the “up ↑” indicators on the box cover and power box, and then secure the box cover to the power box.

3.3 Pole Mounting with GV-Mount440

The mounting requires GV-Mount440 and GV-Mount504.

GV-Mount440 Packing List

1. GV-Mount440	2. M4 Screw x 4

Applicable Models

- GV-TBL2718
- GV-TBLP5800 / 8800

GV-Mount440 + GV-Mount504 Installation

1. Unscrew the box cover.

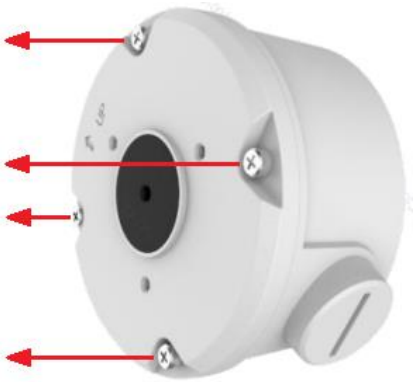

2. Align and attach the power box to the back plate using the 4 supplied M4 screws as indicated.

Note: Make sure the direction of the "up ↑" indicator on the back plate matches that of the power box.

3. Thread the 3 steel straps onto the back plate.

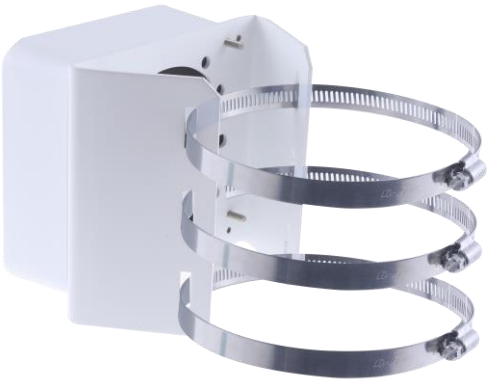

4. To install the camera to the GV-Mount504 wall box, follow Steps 7 to 12 in *3.2 Wall Box Mounting with GV-Mount504*.
5. Secure the camera onto the desired pole by tightening the steel straps.

3.4 Power Box Mounting with GV-Mount924

The mounting requires GV-Mount924.

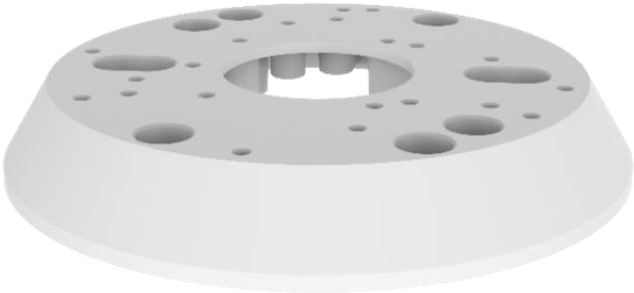

GV-Mount924 Packing List

1. GV-Mount924	2. M3 8 mm Screw x 4

Applicable Models

- GV-TBL2718
- GV-TBLP5800 / 8800

GV-Mount924 installation

1. Secure the gang box onto the back of GV-Mount924 using the ports indicated below.

US Double Gang Box

US Single Gang Box

2. Thread the camera's cables through GV-Mount924 and secure the camera onto the mount using the ports indicated below using the supplied screws.