SPORTON LAB.

Project No : **FD262405-01**

VERIFICATION OF COMPLIANCE

Equipment : **7-Port Multi-Gig Switch**
Model No. : **TEG-S327**
Applicant : **TRENDNET INC**
20675 MANHATTAN PL TORRANCE, CA 90501-1827 United States
TAIPEI, 115 TAIWAN

SPORTON LAB.

I HEREBY DECLARE THAT :

The equipment is in accordance with the procedures are given in **ANSI C63.4 and ANSI C63.4a** and the energy emitted by this equipment was **Passed by FCC Part 15 Subpart B, Canada Standard ICES-003 Issue 7**. Radiated and conducted emissions are compliance in **Class A** limits.
The test was carried out on **Jul. 08, 2022** at **SPORTON INTERNATIONAL INC. Hsinhua Laboratory**.

William Li

EMI TEST REPORT

Filing Type	:	**Supplier's Declaration Of Conformity**
Equipment	:	**7-Port Multi-Gig Switch**
Brand Name	:	**TRENDnet**
Model Name	:	**TEG-S327**
Applicant	:	**TRENDNET INC 20675 MANHATTAN PL TORRANCE, CA 90501-1827 United States**
Manufacturer	:	**TRENDNET INC 20675 MANHATTAN PL TORRANCE, CA 90501-1827 United States**
Standard	:	**47 CFR FCC Rules and Regulations Part 15 Subpart B, Class A Digital Device ICES-003 Issue 7, Class A**

The product was received on Jun. 24, 2022, and testing was started from Jul. 07, 2022 and completed on Jul. 08, 2022. We, SPORTON INTERNATIONAL INC. Hsinhua Laboratory, would like to declare that the tested sample has been evaluated in accordance with the procedures given in ANSI C63.4 and ANSI C63.4a and shown compliance with the applicable technical standards.

The test results in this report apply exclusively to the tested model / sample. Without written approval of SPORTON INTERNATIONAL INC. Hsinhua Laboratory, the test report shall not be reproduced except in full.

Approved by: William Li

SDoC by:

SPORTON INTERNATIONAL INC. Hsinhua Laboratory
No.52, Huaya 1st Rd., Guishan Dist., Taoyuan City 333411, Taiwan (R.O.C.)

Table of Contents

History of this test report 3

Summary of Test Result 4

1. General Description of Equipment under Test 5
- 1.1. Basic Description of Equipment under Test 5
- 1.2. Feature of Equipment under Test 5
- 1.3. Modification of EUT 5

2. Test Configuration of Equipment under Test 6
- 2.1. Details of EUT Test Modes 6
- 2.2. Description of Test System 6
- 2.3. Connection Diagram of Test System 7
- 2.4. Details of EUT Test Setup 9

3. General Information of Test 10
- 3.1. Test Facilities 10
- 3.2. Test Standards 10
- 3.3. Test Voltage/Frequencies 10
- 3.4. Test Distance and Frequency Range Investigated 10
- 3.5. Operating Condition 10
- 3.6. Labelling requirements 11
- 3.7. User Information 12

4. Conducted Emissions Measurement 13
- 4.1. Conducted Emissions at Powerline for FCC 13
- 4.2. Conducted Emissions Measurement (AC mains power terminals) for ISED Standard 17

5. Radiated Emissions Measurement 21
- 5.1. Radiated Emission below 1GHz for FCC 21
- 5.2. Radiated Emission below 1GHz for ISED Standard 24

6. Uncertainty of Test Site 27
- 6.1. Measurement Uncertainty 27

7. List of Measuring Equipment Used 28

Appendix A. Test Results of Conducted Emission at Powerline

Appendix B.1 Test Results of Radiated Emissions below 1GHz_FCC

Appendix B.2 Test Results of Radiated Emissions below 1GHz_ISED

Appendix C. Test Photos

Photographs of EUT v01

History of this test report

Report No.	Version	Description	Issued Date
FD262405-01	01	Initial issue of report	Oct. 18, 2022

Summary of Test Result

FCC

Report Clause	Ref Std. Clause	Test Items	Result (PASS/FAIL)	Remark
4.1	15.107	Conducted Emissions of Powerline	PASS	Under limit 27.62 dB at 546.156 kHz
5.1	15.109	Radiated Emissions below 1GHz	PASS	Under limit 7.58 dB at 249.6 MHz
-	15.109	Radiated Emissions above 1GHz	Not Applicable	Note 1

Note 1: The highest frequency of the internal sources of the EUT is less than 108MHz, so the measurement shall only be made up to 1GHz.
Note 2: From Sporton Project No.: FD262405

ISED

Report Clause	Ref Std. Clause	Test Items	Result (PASS/FAIL)	Remark
4.1	3.2.1	Conducted Emissions of Powerline	PASS	Under limit 27.62 dB at 546.156 kHz
5.2	3.2.2	Radiated Emissions below 1GHz	PASS	Under limit 7.58 dB at 249.6 MHz
-	3.2.2	Radiated Emissions above 1GHz	Not Applicable	Note 1

Note 1: The highest frequency of the internal sources of the EUT is less than 108MHz, so the measurement shall only be made up to 1GHz.
Note 2: From Sporton Project No.: FD262405

Declaration of Conformity:

1. The Radiated Emission and Conducted Transient Disturbances test result (Pass/Fail) which exclude measurement uncertainty. Note that measurement values may risk exceeding the limit of regulation standard. If measurement uncertainty is included in test results.
2. The Radiated Emission and Conducted Transient Disturbances measurement uncertainty please refer to the "Measurement Uncertainty" section of the report.

Comments and explanations:

The test configuration and test mode were recorded in this test report are declared by the manufacturer.

Reviewed by: Andrew Yang

Report Producer: Ann Hou

1. General Description of Equipment under Test

1.1. Basic Description of Equipment under Test

Equipment : 7-Port Multi-Gig Switch
Model No. : TEG-S327
Power Supply Type : From Power Adapter
AC Power Cord : Wall-Mount, 2 pin
DC Power Cable : Non-Shielded, 1.4 m
The maximum operating frequency: 25 MHz

1.2. Feature of Equipment under Test

Accessories				
AC Adapter 2 (US Plug)	Brand Name	Sunny	Model Name	SYS1638-1212-W2
	Power Rating	I/P: 100 - 240 Vac, 0.5 A, O/P: +12.0Vdc, 1.0 A		
	DC Power Cable	1.4 meter, non-shielded cable, w/o ferrite core		

For a more detailed features description, please refer to the manufacturer's specifications or the User's Manual.

1.3. Modification of EUT

No modifications to the EUT were made.

2. Test Configuration of Equipment under Test

2.1. Details of EUT Test Modes

Model No.: TEG-S327 was selected as the main test model and its data was recorded in this report. The equipment under test was performed the following test modes:

Test Items	Description of test modes
Conducted Emission	Mode 1. LAN 1、5: 1 Gbps, LAN 6、7: 2.5 Gbps, LAN 2~4 flotaing
Radiated Emissions <below 1GHz>	Mode 1. LAN 1、5: 1 Gbps, LAN 6、7: 2.5 Gbps, LAN 2~4 floating [Z Axis] Mode 2. LAN 1、5: 1 Gbps, LAN 6、7: 2.5 Gbps, LAN 2~4 floating [X Axis] cause “mode 1” generated the worst test result; it was reported as final data.

2.2. Description of Test System

Conducted emission and radiated emission below 1GHz

No.	Peripheral	Manufacturer	Model Number	FCC ID	Remarks
For Remote					
Z1	Laptop	DELL	E5430	DoC	-
Z2	Laptop	DELL	E5430	DoC	-
Z3	Personal Computer(with 10G card)	HP	Elite 8300	DoC	-
Z4	Personal Computer(with 10G card)	HP	Elite 8300	DoC	-
Z5	LCD Monitor*2	DELL	UltraSharp U2410f	DoC	-
Z6	Keyboard*2	Microsoft	1366	DoC	-
Z7	Mouse*2	Microsoft	1113	DoC	-

2.3. Connection Diagram of Test System

Test Setup Diagram - Conducted emission

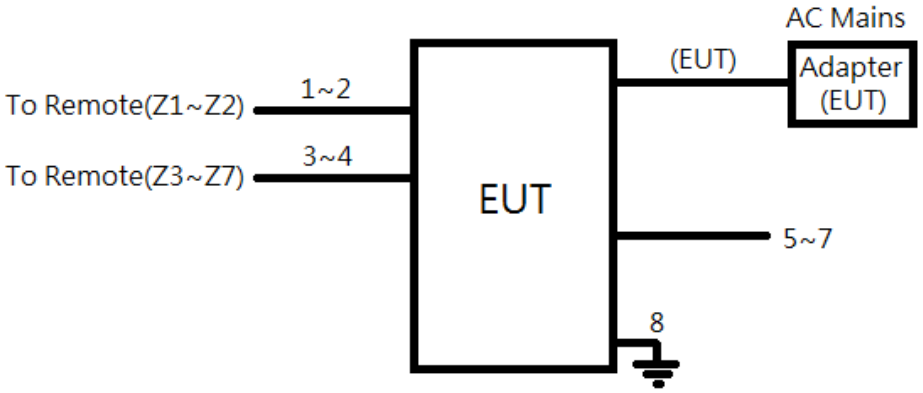

No.	Types of Cables	Shielding on Cable	Length (m)	Remarks
1	RJ45 Cable	Non-Shielded	10	Remote
2	RJ45 Cable	Non-Shielded	10	Remote
3	RJ45 Cable	Non-Shielded	10	Remote
4	RJ45 Cable	Non-Shielded	10	Remote
5~7	RJ45 Cable*3	Non-Shielded	3	Floating
8	GND Cable	Non-Shielded	1.2	Ground

Test Setup Diagram - Radiated emission below 1GHz

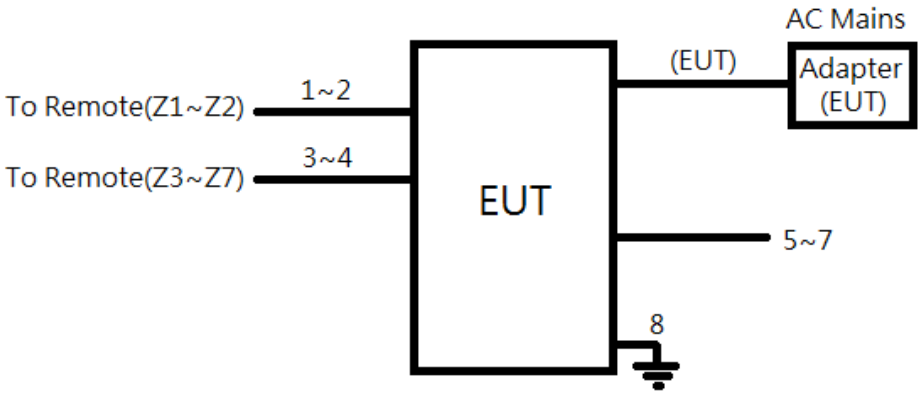

No.	Types of Cables	Shielding on Cable	Length (m)	Remarks
1	RJ45 Cable	Non-Shielded	10	Remote
2	RJ45 Cable	Non-Shielded	10	Remote
3	RJ45 Cable	Non-Shielded	10	Remote
4	RJ45 Cable	Non-Shielded	10	Remote
5~7	RJ45 Cable*3	Non-Shielded	2	Floating
8	GND Cable	Non-Shielded	2	Ground

2.4. Details of EUT Test Setup

An executive program, under WIN 7 (remote) was used as the test software. The program was executed as follows:

- Turn on the power of all equipment.
- The remote Laptop executed "ping" to link with the EUT's 1 Gbps LAN port by RJ45 cable.
- The remote PC executed "ping" to link with the EUT's 2.5 Gbps LAN port by RJ45 cable.
- LAN2~LAN4 Port of EUT was floating through RJ45 Cable.

3. General Information of Test

3.1. Test Facilities

Test Lab : Sporton International Inc. Hsinhua Laboratory			
☒	Hsinhua (TAF: 3785)	**ADD** : No.52, Huaya 1st Rd., Guishan Dist., Taoyuan City 333411, Taiwan (R.O.C.)	
		TEL : 886-3-327-3456	**FAX** : 886-3-327-0973
		FCC Designation Number: TW1129	
☐		**ADD :** No.3, Ln. 238, Kangle St., Neihu Dist., Taipei City 114040, Taiwan (R.O.C.)	
		TEL : 886-2-2631-5551	**FAX :** 886-2-2631-9740
		FCC Designation Number: TW1133	

Test Items	Test Site No.	Test Engineer	Test Environment		Test Date	Remark
			temp °C	humidity %		
Powerline Conducted Emissions	CO01-HY	Michael Huang	26.1~26.3	61~62	08/Jul/2022	-
Radiated Emissions (below 1GHz)	10CH02-HY	Nicky Chen	25.5~26	62~63	07/Jul/2022	-

3.2. Test Standards

Test items	Test Standards and Test Procedures
Radiated and Conducted Emissions	ANSI C63.4:2014 with FCC Method 47 CFR Part 15, Subpart B, Class A Digital Device ANSI C63.4a-2017 with Canada Standard ICES-003 Issue 7, Class A

3.3. Test Voltage/Frequencies

Power Supply Type	Voltage/Frequencies
Power Adapter	120V / 60Hz

3.4. Test Distance and Frequency Range Investigated

Test Items	Frequency Range	Remark
Powerline Conducted Emissions	150 kHz to 30 MHz	-
Radiated Emissions (below 1GHz)	30 MHz to 1,000 MHz	Measurement distance is 10 m.

3.5. Operating Condition

- Full system.

3.6. Labelling requirements

3.6.1. FCC Labelling requirements

The devices shall bear the following statement in a conspicuous location on the device:

This device complies with part 15 of the FCC Rules. Operation is subject to the following two conditions: (1) This device may not cause harmful interference, and (2) this device must accept any interference received, including interference that may cause undesired operation.

3.6.2. ICES Labelling requirements

The requirements specified in ICES-Gen shall apply. An example ISED compliance label, to be placed on each unit of an equipment model (or in the user manual, if allowed), is given below:

CAN ICES-003(*) / NMB-003(*)

* Insert either “A” or “B”, but not both, to identify the applicable Class of the device used for compliance verification.

The above label is only an example. The specific format is left to the manufacturer to decide, as long as the label includes the required information, in accordance with ICES-Gen.

3.7. User Information

The users manual or instruction manual for an intentional or unintentional radiator shall caution the user that changes or modifications not expressly approved by the party responsible for compliance could void the user's authority to operate the equipment.

For a Class B digital device or peripheral, the instructions furnished the user shall include the following or similar statement, placed in a prominent location in the text of the manual:

This equipment has been tested and found to comply with the limits for a Class B digital device, pursuant to part 15 of the FCC Rules. These limits are designed to provide reasonable protection against harmful interference in a residential installation.

This equipment generates, uses and can radiate radio frequency energy and, if not installed and used in accordance with the instructions, may cause harmful interference to radio communications. However, there is no guarantee that interference will not occur in a particular installation.

If this equipment does cause harmful interference to radio or television reception, which can be determined by turning the equipment off and on, the user is encouraged to try to correct the interference by one or more of the following measures:
—Reorient or relocate the receiving antenna.
—Increase the separation between the equipment and receiver.
—Connect the equipment into an outlet on a circuit different from that to which the receiver is connected.
—Consult the dealer or an experienced radio/TV technician for help.

For a Class A digital device or peripheral, the instructions furnished the user shall include the following or similar statement, placed in a prominent location in the text of the manual:

This equipment has been tested and found to comply with the limits for a Class A digital device, pursuant to part 15 of the FCC Rules. These limits are designed to provide reasonable protection against harmful interference when the equipment is operated in a commercial environment. This equipment generates, uses, and can radiate radio frequency energy and, if not installed and used in accordance with the instruction manual, may cause harmful interference to radio communications. Operation of this equipment in a residential area is likely to cause harmful interference in which case the user will be required to correct the interference at his own expense

4. Conducted Emissions Measurement

4.1. Conducted Emissions at Powerline for FCC

The EUT is which satisfies the Class A disturbance limits.

4.1.1. Limit

Limits for conducted disturbance at the mains ports of class A			
Frequency range MHz	**Coupling device**	**Detector type / bandwidth**	**Class A limits** dB(μV)
0,15 – 0,5	AMN	Quasi-peak / 9 kHz	79
0,50 – 30			73
0,15 – 0,5	AMN	Average / 9 kHz	66
0,50 – 30			60
Note 1: The lower limit shall apply at the transition frequency.			
Limits for conducted disturbance at the mains ports of class B			
Frequency range MHz	**Coupling device**	**Detector type / bandwidth**	**Class B limits** dB(μV)
0,15 – 0,5	AMN	Quasi-peak / 9 kHz	66 - 56
0,5 – 5			56
5 – 30			60
0,15 – 0,5	AMN	Average / 9 kHz	56 - 46
0,5 – 5			46
5 – 30			50
Note 1: The lower limit shall apply at the transition frequencies. Note 2: The limit decreases linearly with the logarithm of the frequency in the range 0.15 MHz to 0.50 MHz.			

4.1.2. Test Procedures

Tabletop equipment:

a). The EUT was warmed up for 15 minutes before testing started.
b). The EUT was placed on a desk 0.8 meter height from the metal ground plane and 0.4 meter from the conducting wall of the shielding room and it was kept at least 0.8 meter from any other grounded conducting surface.
c). Connect EUT to the power mains through a line impedance stabilization network (LISN).
d). All the support units are connect to the other LISN.
e). The LISN provides 50 ohm, coupling impedance for the measuring instrument.
f). The FCC states that a 50 ohm, 50 microhenry LISN should be used.
g). Both sides of AC line were checked for maximum conducted interference.
h). The frequency range from 150 kHz to 30 MHz was searched.
i). Set the test-receiver system to Peak Detect Function and Specified Bandwidth with Maximum Hold Mode.
j). All emissions not reported here are more than 10 dB below the prescribed limit.

Floor-standing equipment:

a). The EUT was warmed up for 15 minutes before testing started.
b). The EUT was placed on the horizontal ground reference plane, 12mm above ground.
c). Connect EUT to the power mains through a line impedance stabilization network (LISN).
d). All the support units are connect to the other LISN.
e). The LISN provides 50 ohm, coupling impedance for the measuring instrument.
f). The CISPR states that a 50 ohm, 50 microhenry LISN should be used.
g). Both sides of AC line were checked for maximum conducted interference.
h). The frequency range from 150 kHz to 30 MHz was searched.
i). Set the test-receiver system to Peak Detect Function and Specified Bandwidth with Maximum Hold Mode.
j). All emissions not reported here are more than 10 dB below the prescribed limit.

4.1.3. Measurement Results Calculation

The measured Level is calculated using:
Corrected Reading (dBμV) = Raw(Read Level)+(LISN Factor) + CL(Cable Loss) +AT(Attenuator)
For example at 0.3 MHz if the LISN Factor is 10.48 dB, the cable loss is 0.10 dB, the measured voltage is 36.39 dBμV, attenuation 10dB, the signal strength would be calculated:
Corrected Reading (dBμV) = 36.39 dBμV+10.48 dB + 0.10 dB + 10 dB = 56.97 dBμV

4.1.4. Typical Test Setup Layout

Tabletop equipment

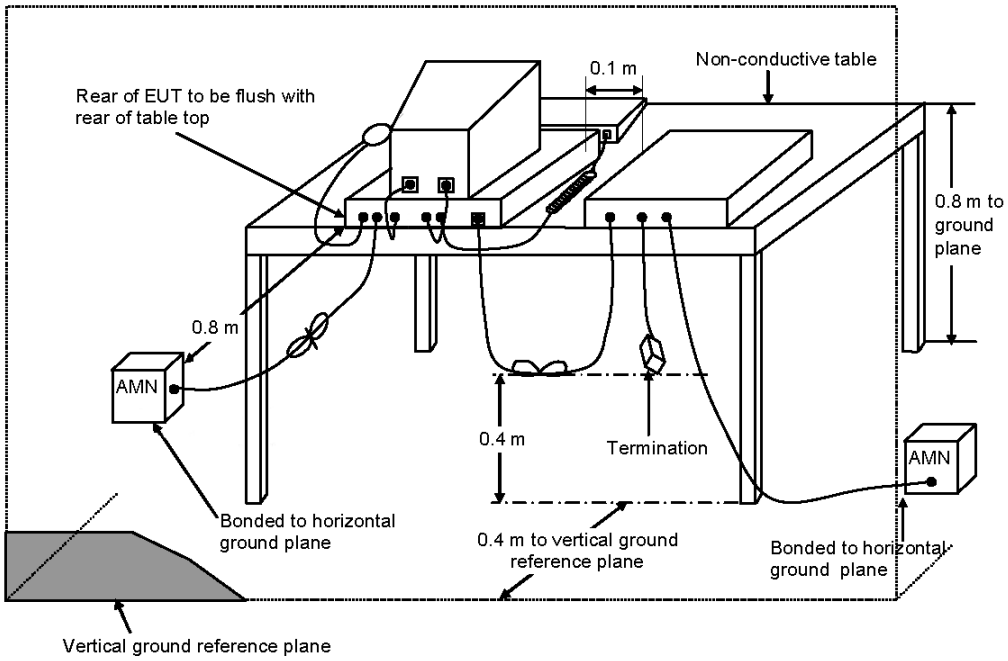

a). AMN is 80 cm from the EUT and at least 80 cm from other units and other metal planes.
b). EUT is connected to one artificial mains network (AMN).
c). All other units of a system are powered from a second AMN. A multiple outlet strip can be used for multiple mains cords.
d). Rear of EUT to be flushed with rear of table top.
e). Peripherals shall be placed at a distance of 10 cm from each other and from the controller, except for the monitor which, if this is an acceptable installation practice, shall be placed directly on the top of the controller.
f). If cables, which hang closer than 40 cm to the horizontal metal ground plane, cannot be shortened to appropriate length, the excess shall be folded back and forth forming a bundle 30 cm to 40 cm long.
g). Mains cords and signal cables shall be positioned for their entire lengths, as far as possible, at 40 cm from the vertical reference plane.
h). Cables of hand operated devices, such as keyboards, mice, etc. shall be placed as for normal usage.

Floor-standing equipment

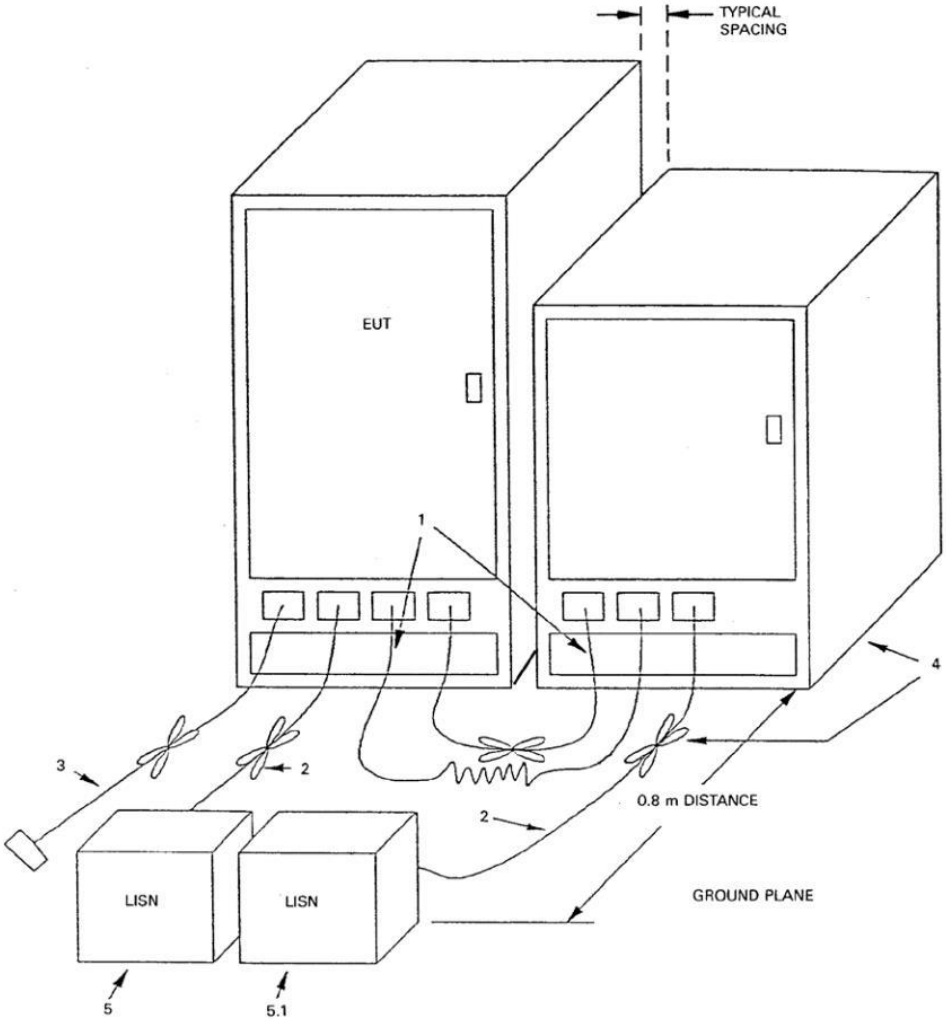

a). Excess I/O cables shall be bundled in the center. If bundling is not possible, the cables shall be arranged in a serpentine fashion. Bundling shall not exceed 40 cm in length.

b). Excess power cords shall be bundled in the center or shortened to appropriate length.

c). I/O cables that are not connected to a peripheral shall be bundled in the center. The end of the cable may be terminated, if required, using the correct terminating impedance. If bundling is not possible, the cable shall be arranged in a serpentine fashion.

d). EUT and all cables shall be insulated, if required, from the ground plane by up to 12 mm of insulating material.

e). EUT connected to one LISN. LISN can be placed on top of, or immediately beneath, the ground plane.

5.1 All other equipment powered from a second LISN or additional LISN(s).

5.2 A multiple outlet strip can be used for multiple power cords of non-EUT equipment.

4.1.5. Test Result

Refer as Appendix A

4.2. Conducted Emissions Measurement (AC mains power terminals) for ISED Standard

The EUT is which satisfies the Class A disturbance limits.

4.2.1. Limit

Limits for conducted disturbance at the mains ports of class A			
Frequency range MHz	**Coupling device**	**Detector type / bandwidth**	**Class A limits dB(μV)**
0,15 – 0,5	AMN	Quasi-peak / 9 kHz	79
0,50 – 5			73
5 – 30			73
0,15 – 0,5	AMN	Average / 9 kHz	66
0,50 – 5			60
5 – 30			60
Note : The more stringent limit applies at transition frequencies.			

Limits for conducted disturbance at the mains ports of class B			
Frequency range MHz	**Coupling device**	**Detector type / bandwidth**	**Class B limits dB(μV)**
0,15 – 0,5	AMN	Quasi-peak / 9 kHz	66 to 56
0,50 – 5			56
5 – 30			60
0,15 – 0,5	AMN	Average / 9 kHz	56 to 46
0,50 – 5			46
5 – 30			50
Note : The more stringent limit applies at transition frequencies.			

4.2.2. Test Procedures

Tabletop equipment:

k). The EUT was warmed up for 15 minutes before testing started.
l). The EUT was placed on a desk 0.8 meter height from the metal ground plane and 0.4 meter from the conducting wall of the shielding room and it was kept at least 0.8 meter from any other grounded conducting surface.
m). Connect EUT to the power mains through a line impedance stabilization network (LISN).
n). All the support units are connect to the other LISN.
o). The LISN provides 50 ohm, coupling impedance for the measuring instrument.
p). The CISPR states that a 50 ohm, 50 microhenry LISN should be used.
q). Both sides of AC line were checked for maximum conducted interference.
r). The frequency range from 150 kHz to 30 MHz was searched.
s). Set the test-receiver system to Peak Detect Function and Specified Bandwidth with Maximum Hold Mode.
t). All emissions not reported here are more than 10 dB below the prescribed limit.

Floor-standing equipment:

a). The EUT was warmed up for 15 minutes before testing started.
b). The EUT was placed on the horizontal ground reference plane, 12 mm above ground.
c). Connect EUT to the power mains through a line impedance stabilization network (LISN).
d). All the support units are connect to the other LISN.
e). The LISN provides 50 ohm, coupling impedance for the measuring instrument.
f). The CISPR states that a 50 ohm, 50 microhenry LISN should be used.
g). Both sides of AC line were checked for maximum conducted interference.
h). The frequency range from 150 kHz to 30 MHz was searched.
i). Set the test-receiver system to Peak Detect Function and Specified Bandwidth with Maximum Hold Mode.
j). All emissions not reported here are more than 10 dB below the prescribed limit.

4.2.3. Measurement Results Calculation

The measured Level is calculated using:
Corrected Reading (dBμV) = Raw(Read Level)+(LISN Factor) + CL(Cable Loss) +AT(Attenuator)
For example at 0.3 MHz if the LISN Factor is 10.48 dB, the cable loss is 0.10 dB, the measured voltage is 36.39 dBμV, attenuation 10dB, the signal strength would be calculated:
Corrected Reading (dBμV) = 36.39 dBμV+10.48 dB + 0.10 dB + 10 dB = 56.97 dBμV

4.2.4. Typical Test Setup Layout

Tabletop equipment

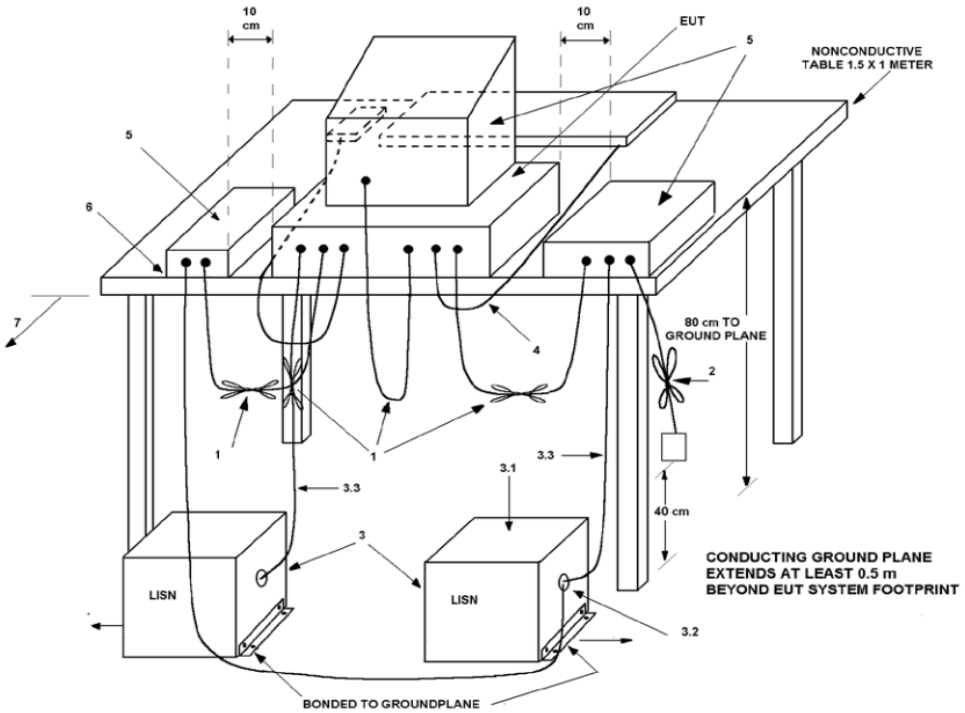

i). Interconnecting cables that hang closer than 40 cm to the ground plane shall be folded back and forth in the center forming a bundle 30 cm to 40 cm long.

j). Input/output (I/O) cables that are not connected to a peripheral shall be bundled in the center. The end of the cable may be terminated, if required, using the correct terminating impedance. The overall length shall not exceed 1 m.

k). EUT connected to one LISN. Unused LISN measuring port connectors shall be terminated into 50 Ω loads. LISN can be placed on top of, or immediately beneath, reference ground plane.
3.1 All other equipment powered from additional LISN(s).
3.2 Multiple outlet strips can be used for multiple power cords of non-EUT equipment.
3.3 LISN at least 80 cm from nearest part of EUT chassis.

l). Cables of hand-operated devices, such as keyboards and mice, shall be placed as for normal use.

m). Non-EUT components of EUT system being tested.

n). Rear of EUT, including peripherals, shall all be aligned and flush with rear of tabletop.

o). Rear of tabletop shall be 40 cm removed from a vertical conducting plane that is bonded to the ground plane.

Floor-standing equipment

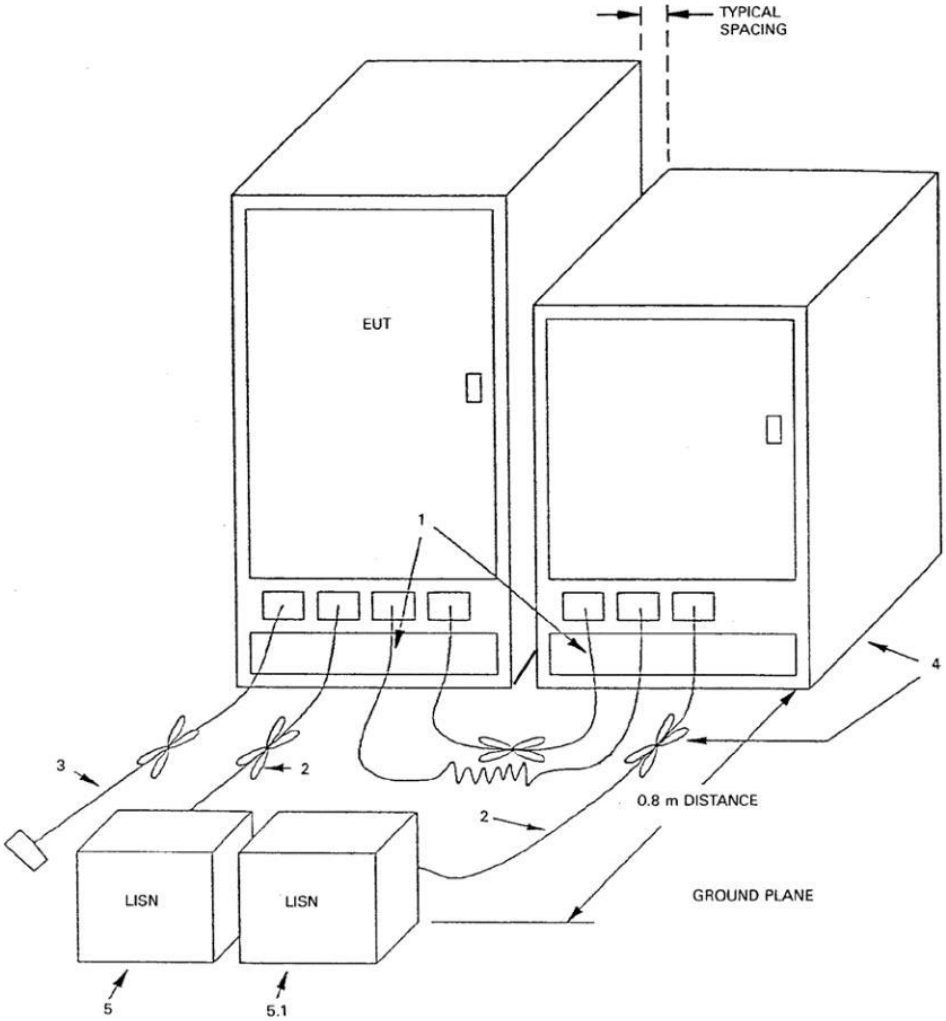

a). Excess I/O cables shall be bundled in the center. If bundling is not possible, the cables shall be arranged in a serpentine fashion. Bundling shall not exceed 40 cm in length.
b). Excess power cords shall be bundled in the center or shortened to appropriate length.
c). I/O cables that are not connected to a peripheral shall be bundled in the center. The end of the cable may be terminated, if required, using the correct terminating impedance. If bundling is not possible, the cable shall be arranged in a serpentine fashion.
d). EUT and all cables shall be insulated, if required, from the ground plane by up to 12 mm of insulating material.
e). EUT connected to one LISN. LISN can be placed on top of, or immediately beneath, the ground plane.
5.1 All other equipment powered from a second LISN or additional LISN(s).
5.2 A multiple outlet strip can be used for multiple power cords of non-EUT equipment.

4.2.5. Test Result

Refer as Appendix A

5. Radiated Emissions Measurement

The EUT is which satisfies the Class A disturbance limits.

5.1. Radiated Emission below 1GHz for FCC

5.1.1. Limit

radiated emissions at frequencies up to 1 GHz for Class A equipment			
Frequency range MHz	**Measurement**		**Class A limits**
	Distance (m)	**Detector type / bandwidth**	**dB(μV/m)**
30 – 230	10	Quasi Peak / 120 kHz	40
230 – 1000			47
radiated emissions at frequencies up to 1 GHz for Class B equipment			
Frequency range MHz	**Measurement**		**Class B limits**
	Distance (m)	**Detector type / bandwidth**	**dB(μV/m)**
30 – 230	10	Quasi Peak / 120 kHz	30
230 – 1000			37

5.1.2. Test Procedures

Tabletop equipment:

a). The EUT was placed on a rotatable table top 0.8 meter above ground.
b). The EUT was set 10 meters from the interference-receiving antenna which was mounted on the top of a variable height antenna tower.
c). The table was rotated 360 degrees to determine the position of the highest radiation.
d). The antenna is a half wave dipole and its height is varied between one meter and four meters above ground to find the maximum value of the field strength both horizontal polarization and vertical polarization of the antenna are set to make the measurement.
e). For each suspected emission the EUT was arranged to its worst case and then tune the antenna tower (from 1 M to 4 M) and turn table (from 0 degree to 360 degrees) to find the maximum reading.
f). Set the test-receiver system to Peak Detect Function and specified bandwidth with Maximum Hold Mode.
g). If the emission level of the EUT in peak mode was 3 dB lower than the limit specified, then testing will be stopped and peak values of EUT will be reported, otherwise, the emissions which do not have 3 dB margin will be repeated one by one using the quasi-peak method and reported.
h). The FCC Part 15.109(g) permit parties seeking to authorize a digital device to choose to demonstrate that the device complies with either the Part 15 standards or the international standards found in Publication 22 of the International Special Committee on Radio Interference (CISPR).
i). If the EUT is having a Wireless modular, can choose to install the filter at the input connector of test-receiver system.

Floor-standing equipment:

a). The EUT was placed on the horizontal ground reference plane, 12 mm above ground.
b). The EUT was set 10 meters from the interference-receiving antenna which was mounted on the top of a variable height antenna tower.
c). The table was rotated 360 degrees to determine the position of the highest radiation.
d). The antenna is a half wave dipole and its height is varied between one meter and four meters above ground to find the maximum value of the field strength both horizontal polarization and vertical polarization of the antenna are set to make the measurement.
e). For each suspected emission the EUT was arranged to its worst case and then tune the antenna tower (from 1 M to 4 M) and turn table (from 0 degree to 360 degrees) to find the maximum reading.

f). Set the test-receiver system to Peak Detect Function and specified bandwidth with Maximum Hold Mode.
g). If the emission level of the EUT in peak mode was 3 dB lower than the limit specified, then testing will be stopped and peak values of EUT will be reported, otherwise, the emissions which do not have 3 dB margin will be repeated one by one using the quasi-peak method and reported.
h). The FCC Part 15.109(g) permit parties seeking to authorize a digital device to choose to demonstrate that the device complies with either the Part 15 standards or the international standards found in Publication 22 of the International Special Committee on Radio Interference (CISPR).
i). If the EUT is having a Wireless modular, can choose to install the filter at the input connector of test-receiver system.

5.1.3. Measurement Results Calculation

The measured Level is calculated using:
Corrected Reading (dBμV/m) = Raw(Read Level)+AF(Antenna Factor)+CL(Cable Loss)−PA(Preamp Factor)
For example at 125 MHz if the Antenna Factor is 17.24 dB/m, the cable loss is 1.20 dB, the measured voltage is 35.80 dBμV and the Preamp Factor is 27.18 dB, the signal strength would be calculated:
Corrected Reading (dBμV/m) = 35.80 dBμV + 17.24 dB/m + 1.20 dB - 27.18 dB = 27.06 dBμV/m
Note: If a hybrid antenna is used, the antenna factor shall be the sum of the Antenna Factor + Attenuator Factor.

5.1.4. Typical Test Setup Layout

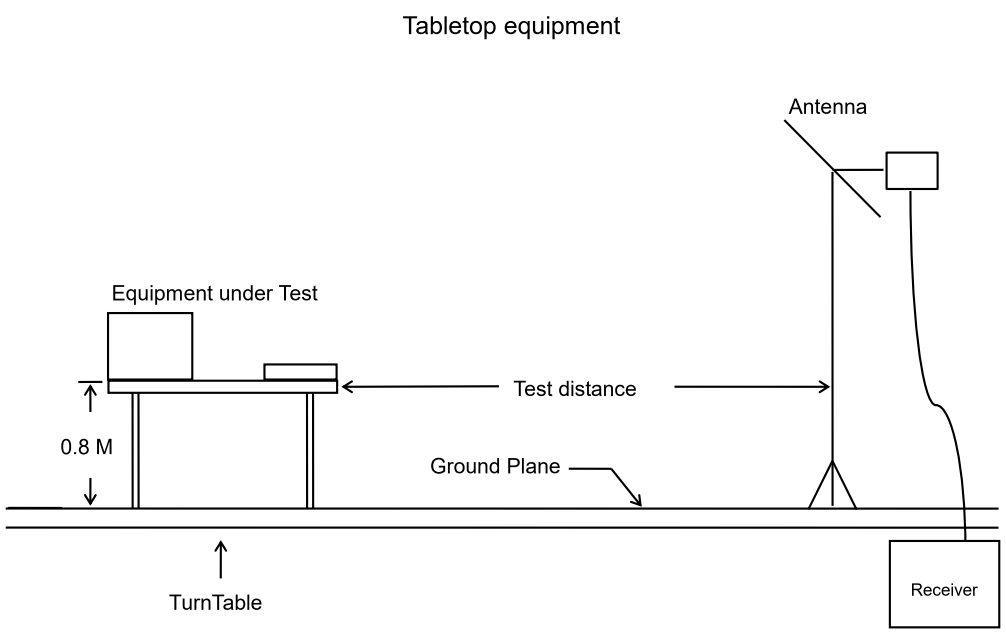

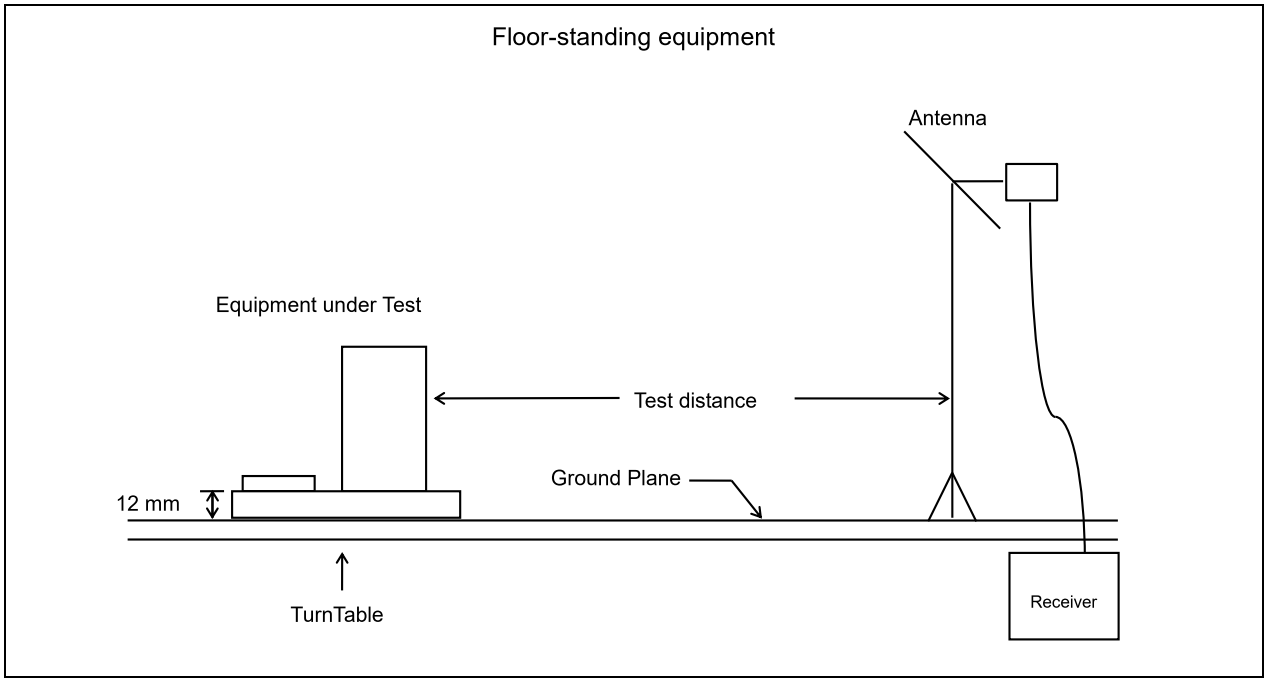

5.1.5. Test Result

Refer as Appendix B.1

5.2. Radiated Emission below 1GHz for ISED Standard

The EUT is which satisfies the Class A disturbance limits.

5.2.1. Limit

radiated emissions at frequencies up to 1 GHz for Class A equipment				
Frequency range MHz	**Measurement**		**Class A limits**	
	Distance (m)	**Detector type / bandwidth**	**3m(dBμV/m)**	**10m(dBμV/m)**
30 – 88	3 or 10	Quasi Peak / 120 kHz	50.0	40.0
88 – 216			54.0	43.5
216 – 230			56.9	46.4
230 – 960			57.0	47.0
960 – 1000			60.0	49.5
Note: The more stringent limit applies at transition frequencies.				

radiated emissions at frequencies up to 1 GHz for Class B equipment				
Frequency range MHz	**Measurement**		**Class B limits**	
	Distance (m)	**Detector type / bandwidth**	**3m(dBμV/m)**	**10m(dBμV/m)**
30 – 88	3 or 10	Quasi Peak / 120 kHz	40.0	30.0
88 – 216			43.5	33.1
216 – 230			46.0	35.6
230 – 960			47.0	37.0
960 – 1000			54.0	43.5
Note: The more stringent limit applies at transition frequencies.				

5.2.2. Test Procedures

Tabletop equipment:

j). The EUT was placed on a rotatable table top 0.8 meter above ground.

k). The EUT was set 10 meters from the interference-receiving antenna which was mounted on the top of a variable height antenna tower.

l). The table was rotated 360 degrees to determine the position of the highest radiation.

m). The antenna is a half wave dipole and its height is varied between one meter and four meters above ground to find the maximum value of the field strength both horizontal polarization and vertical polarization of the antenna are set to make the measurement.

n). For each suspected emission the EUT was arranged to its worst case and then tune the antenna tower (from 1 M to 4 M) and turn table (from 0 degree to 360 degrees) to find the maximum reading.

o). Set the test-receiver system to Peak Detect Function and specified bandwidth with Maximum Hold Mode.

p). If the emission level of the EUT in peak mode was 3 dB lower than the limit specified, then testing will be stopped and peak values of EUT will be reported, otherwise, the emissions which do not have 3 dB margin will be repeated one by one using the quasi-peak method and reported.

q). If the EUT is having a Wireless modular, can choose to install the filter at the input connector of test-receiver system.

Floor-standing equipment:

a). The EUT was placed on the horizontal ground reference plane, 12 mm above ground.

b). The EUT was set 10 meters from the interference-receiving antenna which was mounted on the top of a variable height antenna tower.

c). The table was rotated 360 degrees to determine the position of the highest radiation.

d). The antenna is a half wave dipole and its height is varied between one meter and four meters above ground to find the maximum value of the field strength both horizontal polarization and vertical polarization of the antenna are set to make the measurement.

e). For each suspected emission the EUT was arranged to its worst case and then tune the antenna tower (from 1 M to 4 M) and turn table (from 0 degree to 360 degrees) to find the maximum reading.

f). If the EUT is having a Wireless modular, can choose to install the filter at the input connector of test-receiver system.

5.2.3. Measurement Results Calculation

The measured Level is calculated using:

Corrected Reading (dBμV/m) = Raw(Read Level)+AF(Antenna Factor)+CL(Cable Loss)−PA(Preamp Factor)

For example at 125 MHz if the Antenna Factor is 17.24 dB/m, the cable loss is 1.20 dB, the measured voltage is 35.80 dBμV and the Preamp Factor is 27.18 dB, the signal strength would be calculated:

Corrected Reading (dBμV/m) = 35.80 dBμV + 17.24 dB/m + 1.20 dB - 27.18 dB = 27.06 dBμV/m

Note: If a hybrid antenna is used, the antenna factor shall be the sum of the Antenna Factor + Attenuator Factor.

5.2.4. Typical Test Setup Layout

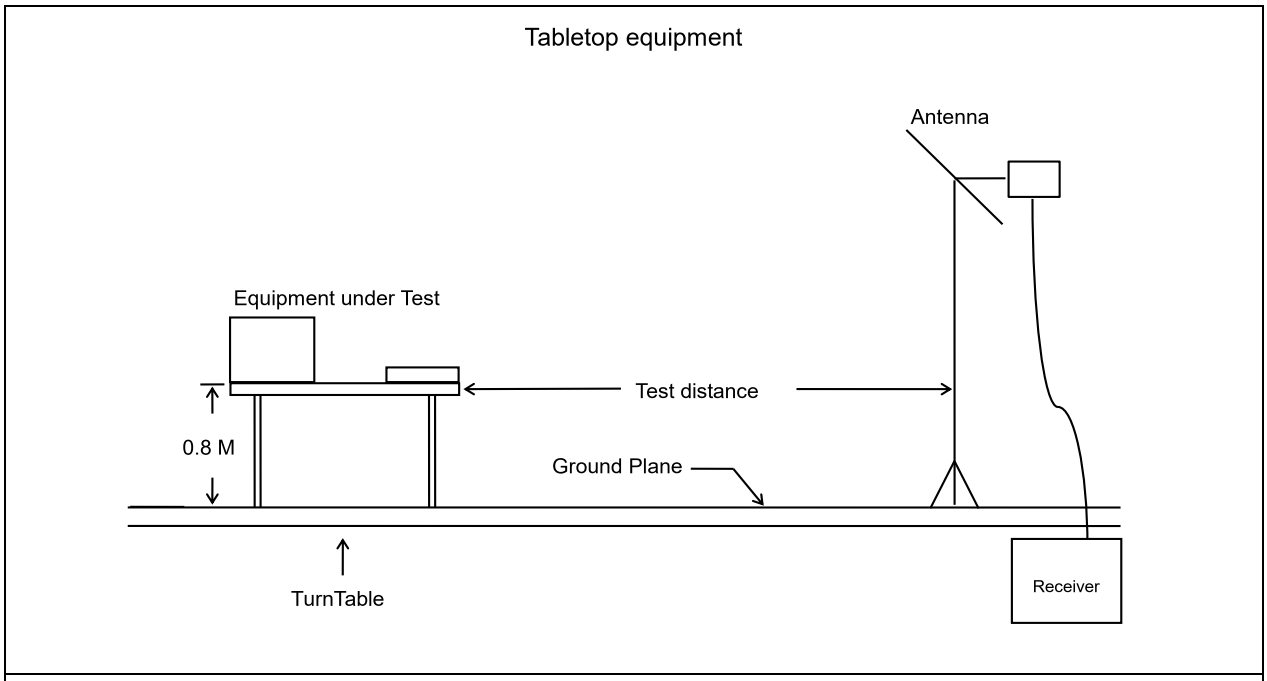

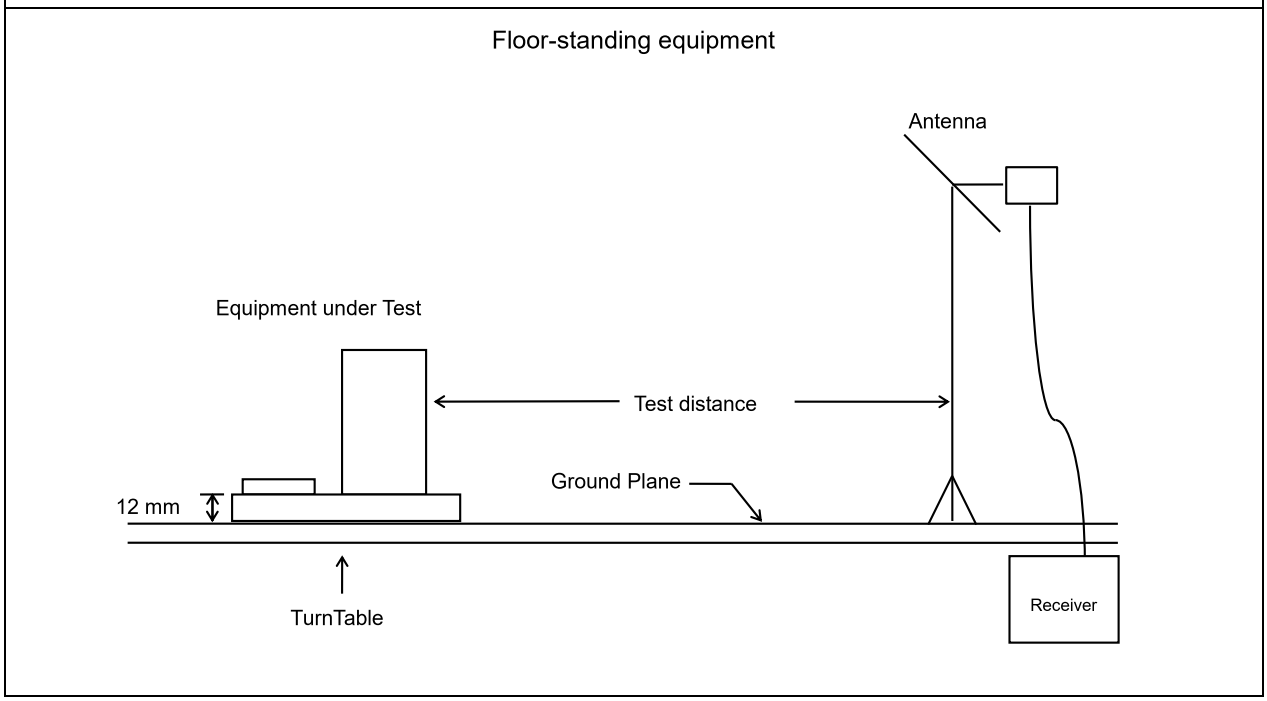

5.2.5. Test Result

Refer as Appendix B.2

6. Uncertainty of Test Site

ISO/IEC 17025 requires that an estimate of the measurement uncertainties associated with the emissions test results be included in the report. The measurement uncertainties given below are based on a 95% confidence level (based on a coverage factor (k=2).

6.1. Measurement Uncertainty

Test Items	Test Site No.	U_{LAB}
Conducted Emissions	CO01-HY	2.66 dB
Radiated Emissions below 1GHz	10CH02-HY	5.44 dB

7. List of Measuring Equipment Used

Conducted Emission - Test Date: 08/Jul/2022

Instrument	Manufacturer/ Brand	Model No.	Serial No.	Characteristics	Calibration Date	Calibration Due Date	Remark
EMI Test Receiver	R&S	ESR	102052	9kHz ~ 3.6GHz	30/May/2022	29/May/2023	Conduction (CO01-HY)
Two-Line V Network (LISN)	R&S	ENV 216	101274	9kHz ~ 30MHz	24/May/2022	23/May/2023	Conduction (CO01-HY)
Cable	MTJ	RG 142	CO01-cable-01	9 kHz ~ 1GHz	12/Jul/2021	11/Jul/2022	Conduction (CO01-HY)
Pulse Limiter	R&S	EHS3-Z2	100920	9kHz ~ 30MHz	29/Oct/2021	28/Oct/2022	Conduction (CO01-HY)
Software	Sporton	SENSE-EMI	V5.10.7	-	NCR	NCR	Conduction (CO01-HY)

NCR: No Calibration Required

Radiated Emission below 1GHz - Test Date: 07/Jul/2022

Instrument	Manufacturer/ Brand	Model No.	Serial No.	Characteristics	Calibration Date	Calibration Due Date	Remark
10m Semi Anechoic Chamber	TDK	SAC-10M	10CH02-HY	30 MHz ~ 1 GHz 10m,3m	18/Sep/2021	17/Sep/2022	Radiation (10CH02-HY)
Amplifier	AGILENT	8447D	2944A10828	100 kHz ~ 1.3 GHz	03/Jan/2022	02/Jan/2023	Radiation (10CH02-HY)
Amplifier	AGILENT	8447D	2944A10827	100 kHz ~ 1.3 GHz	03/Jan/2022	02/Jan/2023	Radiation (10CH02-HY)
Receiver	R&S	ESU26	100422	20Hz ~ 26.5GHz	05/Nov/2021	04/Nov/2022	Radiation (10CH02-HY)
EXA Signal Analyzer	KEYSIGHT	N9010A	MY54200401	10Hz ~ 44GHz	21/Dec/2021	20/Dec/2022	Radiation (10CH02-HY)
Biconical Antenna	Schwarzbeck	VHBB 9124	287	30 MHz ~ 200 MHz	19/Nov/2021	18/Nov/2022	Radiation (10CH02-HY)
Log Antenna	Schwarzbeck	VUSLP 9111	207	200 MHz ~ 1 GHz	22/Nov/2021	21/Nov/2022	Radiation (10CH02-HY)
Turn Table	EM Electronics	EM 1000	60546	0 -360 degree	NCR	NCR	Radiation (10CH02-HY)
Antenna Mast	HD	MA240	240/664	1 m - 4 m	NCR	NCR	Radiation (10CH02-HY)
Antenna Mast	MF	MFA-515BSN	1308569	1 m - 4 m	NCR	NCR	Radiation (10CH02-HY)
RF Cable-R10m	Jye Bao	RG142	CB027-INSIDE	30 MHz ~ 1 GHz	15/Sep/2021	14/Sep/2022	Radiation (10CH02-HY)
RF Cable-R10m	MTJ	RG223/U + RG8/U	CB026-DOOR	30 MHz ~ 1 GHz	15/Sep/2021	14/Sep/2022	Radiation (10CH02-HY)
Software	Sporton	SENSE-EMI	V5.10.8	-	NCR	NCR	Radiation (10CH02-HY)

NCR: No Calibration Required

Summary

Mode	Type	Freq (Hz)	Level (dBuV)	Limit (dBuV)	Margin (dB)	Factor (dB)	Condition
Mode 1	AV	546.156k	32.38	60.00	-27.62	19.34	Neutral

Mode 1

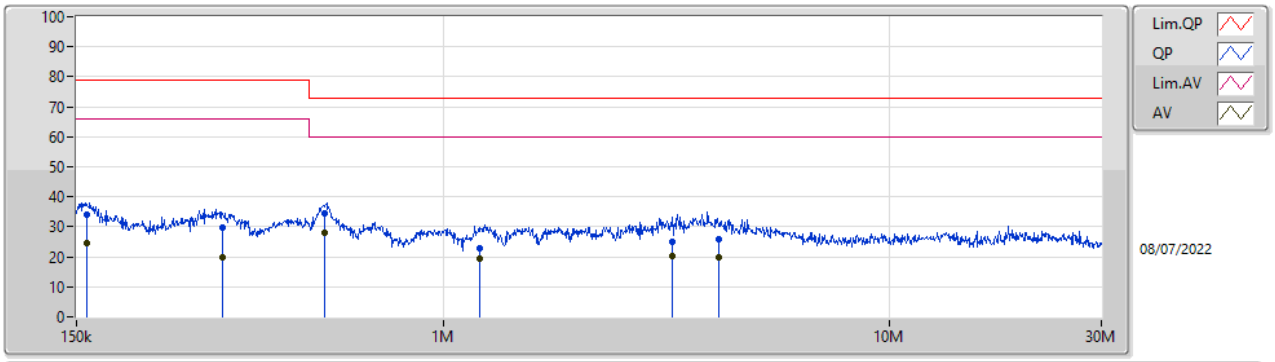

Type	Freq	Level	Limit	Margin	Factor	Condition	Comment	Raw	LISN	CL	AT
	(Hz)	(dBuV)	(dBuV)	(dB)	(dB)			(dBuV)	(dB)	(dB)	(dB)
QP	157.73k	33.95	79.00	-45.05	19.48	Line	-	14.47	9.59	0.07	9.82
AV	157.73k	24.46	66.00	-41.54	19.48	Line	-	4.98	9.59	0.07	9.82
QP	318.134k	29.55	79.00	-49.45	19.41	Line	-	10.14	9.59	0.08	9.74
AV	318.134k	19.75	66.00	-46.25	19.41	Line	-	0.34	9.59	0.08	9.74
QP	542.692k	34.62	73.00	-38.38	19.34	Line	-	15.28	9.59	0.09	9.66
AV	542.692k	28.17	60.00	-31.83	19.34	Line	"Worst"	8.83	9.59	0.09	9.66
QP	1.21M	22.74	73.00	-50.26	19.29	Line	-	3.45	9.60	0.11	9.58
AV	1.21M	19.47	60.00	-40.53	19.29	Line	-	0.18	9.60	0.11	9.58
QP	3.26M	24.79	73.00	-48.21	19.31	Line	-	5.48	9.62	0.15	9.54
AV	3.26M	20.42	60.00	-39.58	19.31	Line	-	1.11	9.62	0.15	9.54
QP	4.161M	26.06	73.00	-46.94	19.32	Line	-	6.74	9.62	0.16	9.54
AV	4.161M	19.78	60.00	-40.22	19.32	Line	-	0.46	9.62	0.16	9.54

Mode 1

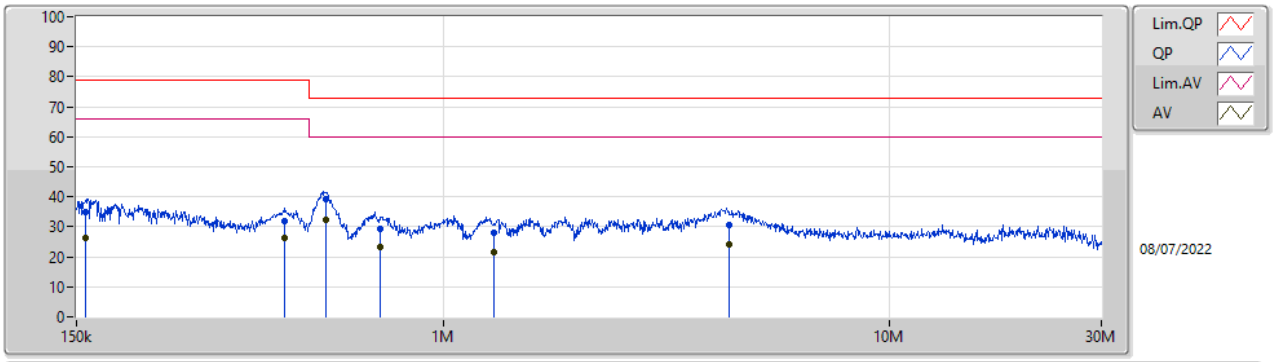

Type	Freq	Level	Limit	Margin	Factor	Condition	Comment	Raw	LISN	CL	AT
	(Hz)	(dBuV)	(dBuV)	(dB)	(dB)			(dBuV)	(dB)	(dB)	(dB)
QP	157.14k	34.95	79.00	-44.05	19.48	Neutral	-	15.47	9.59	0.07	9.82
AV	157.14k	26.26	66.00	-39.74	19.48	Neutral	-	6.78	9.59	0.07	9.82
QP	439.051k	31.94	79.00	-47.06	19.37	Neutral	-	12.57	9.59	0.09	9.69
AV	439.051k	26.33	66.00	-39.67	19.37	Neutral	-	6.96	9.59	0.09	9.69
QP	546.156k	39.08	73.00	-33.92	19.34	Neutral	-	19.74	9.59	0.09	9.66
AV	546.156k	32.38	60.00	-27.62	19.34	Neutral	"Worst"	13.04	9.59	0.09	9.66
QP	720.893k	29.44	73.00	-43.56	19.32	Neutral	-	10.12	9.59	0.10	9.63
AV	720.893k	23.31	60.00	-36.69	19.32	Neutral	-	3.99	9.59	0.10	9.63
QP	1.3M	28.14	73.00	-44.86	19.27	Neutral	-	8.87	9.59	0.11	9.57
AV	1.3M	21.41	60.00	-38.59	19.27	Neutral	-	2.14	9.59	0.11	9.57
QP	4.372M	30.76	73.00	-42.24	19.33	Neutral	-	11.43	9.62	0.17	9.54
AV	4.372M	24.27	60.00	-35.73	19.33	Neutral	-	4.94	9.62	0.17	9.54

Summary

Mode	Type	Freq (Hz)	Level (dBuV/m)	Limit (dBuV/m)	Margin (dB)	Factor (dB/m)	Condition	Azimuth (°)	Height (m)
Mode 1	PK	249.6M	39.42	47.00	-7.58	-11.57	Horizontal	230	4.00

Mode 1

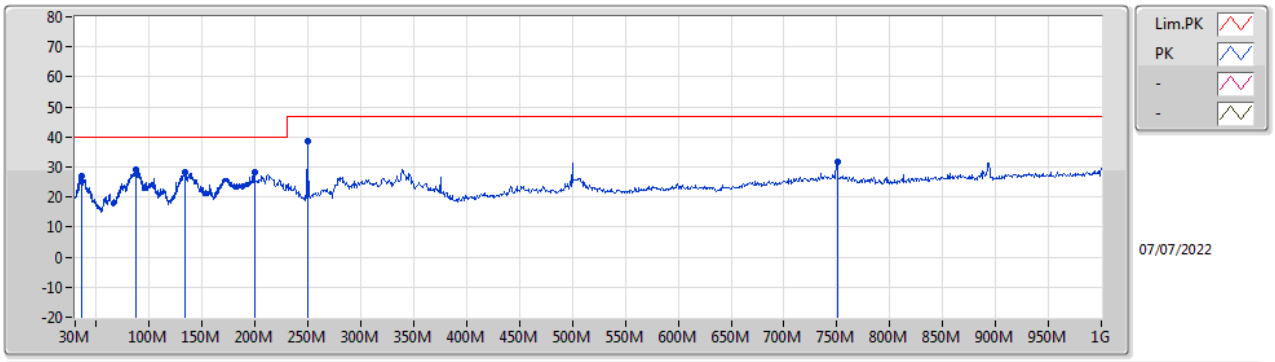

Type	Freq	Level	Limit	Margin	Factor	Dist	Condition	Azimuth	Height	Comment	Raw	AF	CL	PA
	(Hz)	(dBuV/m)	(dBuV/m)	(dB)	(dB/m)	(m)		(°)	(m)		(dBuV)	(dB/m)	(dB)	(dB)
PK	35.61M	26.89	40.00	-13.11	-14.29	10	Vertical	-	-	-	41.18	11.98	2.16	28.43
PK	87.29M	29.31	40.00	-10.69	-16.01	10	Vertical	-	-	-	45.32	8.82	3.46	28.29
PK	134.21M	28.26	40.00	-11.74	-12.38	10	Vertical	-	-	-	40.64	11.38	4.30	28.06
PK	200M	28.16	40.00	-11.84	-8.00	10	Vertical	-	-	-	36.16	16.50	3.09	27.59
PK	249.6M	38.70	47.00	-8.30	-11.57	10	Vertical	200	1.00	"Worst"	50.27	12.40	3.42	27.39
PK	750.4M	31.77	47.00	-15.23	-1.49	10	Vertical	-	-	-	33.26	20.99	5.81	28.29

Mode 1

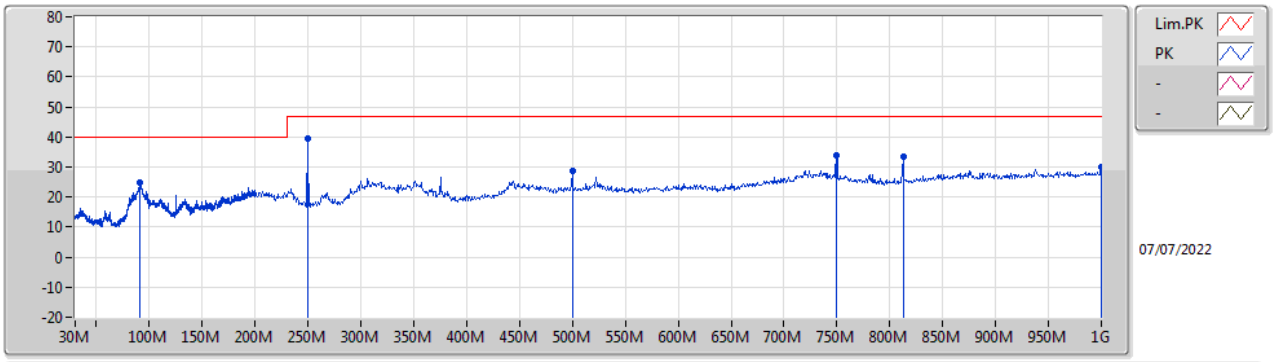

Type	Freq	Level	Limit	Margin	Factor	Dist	Condition	Azimuth	Height	Comment	Raw	AF	CL	PA
	(Hz)	(dBuV/m)	(dBuV/m)	(dB)	(dB/m)	(m)		(°)	(m)		(dBuV)	(dB/m)	(dB)	(dB)
PK	91.37M	24.85	40.00	-15.15	-15.73	10	Horizontal	-	-	-	40.58	9.00	3.54	28.27
PK	249.6M	39.42	47.00	-7.58	-11.57	10	Horizontal	230	4.00	"Worst"	50.99	12.40	3.42	27.39
PK	500M	28.81	47.00	-18.19	-6.10	10	Horizontal	-	-	-	34.91	17.60	4.78	28.48
PK	749.6M	33.88	47.00	-13.12	-1.47	10	Horizontal	-	-	-	35.35	21.01	5.81	28.29
PK	812.8M	33.58	47.00	-13.42	-1.25	10	Horizontal	-	-	-	34.83	21.06	5.86	28.17
PK	1G	30.21	47.00	-16.79	2.63	10	Horizontal	-	-	-	27.58	23.20	6.53	27.10

Summary

Mode	Type	Freq (Hz)	Level (dBuV/m)	Limit (dBuV/m)	Margin (dB)	Factor (dB/m)	Condition	Azimuth (°)	Height (m)
Mode 1	PK	249.6M	39.42	47.00	-7.58	-11.57	Horizontal	230	4.00

Mode 1

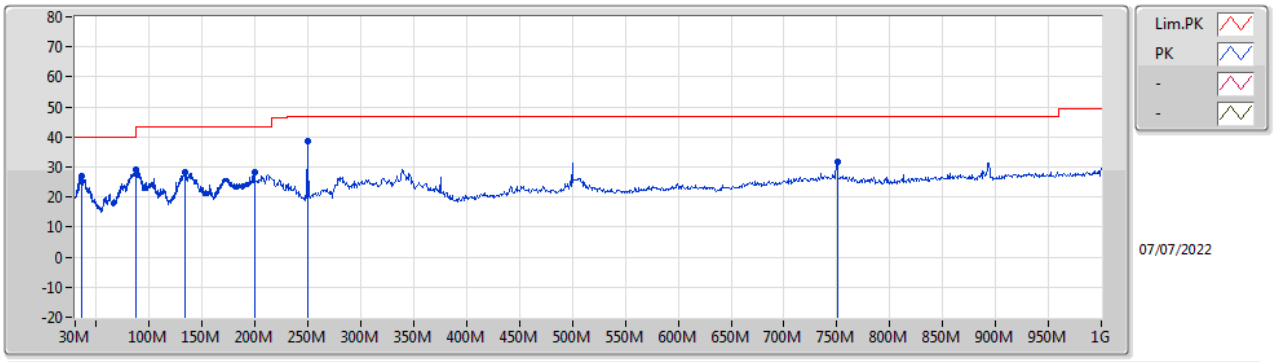

Type	Freq	Level	Limit	Margin	Factor	Dist	Condition	Azimuth	Height	Comment	Raw	AF	CL	PA
	(Hz)	(dBuV/m)	(dBuV/m)	(dB)	(dB/m)	(m)		(°)	(m)		(dBuV)	(dB/m)	(dB)	(dB)
PK	35.61M	26.89	40.00	-13.11	-14.29	10	Vertical	-	-	-	41.18	11.98	2.16	28.43
PK	87.29M	29.31	40.00	-10.69	-16.01	10	Vertical	-	-	-	45.32	8.82	3.46	28.29
PK	134.21M	28.26	43.50	-15.24	-12.38	10	Vertical	-	-	-	40.64	11.38	4.30	28.06
PK	200M	28.16	43.50	-15.34	-8.00	10	Vertical	-	-	-	36.16	16.50	3.09	27.59
PK	249.6M	38.70	47.00	-8.30	-11.57	10	Vertical	200	1.00	"Worst"	50.27	12.40	3.42	27.39
PK	750.4M	31.77	47.00	-15.23	-1.49	10	Vertical	-	-	-	33.26	20.99	5.81	28.29

Mode 1

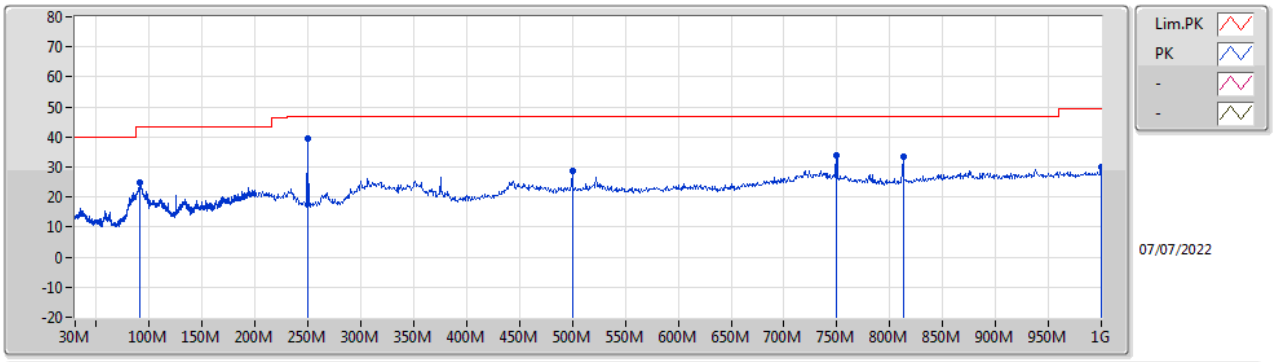

Type	Freq	Level	Limit	Margin	Factor	Dist	Condition	Azimuth	Height	Comment	Raw	AF	CL	PA
	(Hz)	(dBuV/m)	(dBuV/m)	(dB)	(dB/m)	(m)		(°)	(m)		(dBuV)	(dB/m)	(dB)	(dB)
PK	91.37M	24.85	43.50	-18.65	-15.73	10	Horizontal	-	-	-	40.58	9.00	3.54	28.27
PK	249.6M	39.42	47.00	-7.58	-11.57	10	Horizontal	230	4.00	"Worst"	50.99	12.40	3.42	27.39
PK	500M	28.81	47.00	-18.19	-6.10	10	Horizontal	-	-	-	34.91	17.60	4.78	28.48
PK	749.6M	33.88	47.00	-13.12	-1.47	10	Horizontal	-	-	-	35.35	21.01	5.81	28.29
PK	812.8M	33.58	47.00	-13.42	-1.25	10	Horizontal	-	-	-	34.83	21.06	5.86	28.17
PK	1G	30.21	49.50	-19.29	2.63	10	Horizontal	-	-	-	27.58	23.20	6.53	27.10

1. Photographs of Conducted Emissions Test Configuration

Front View

Side View

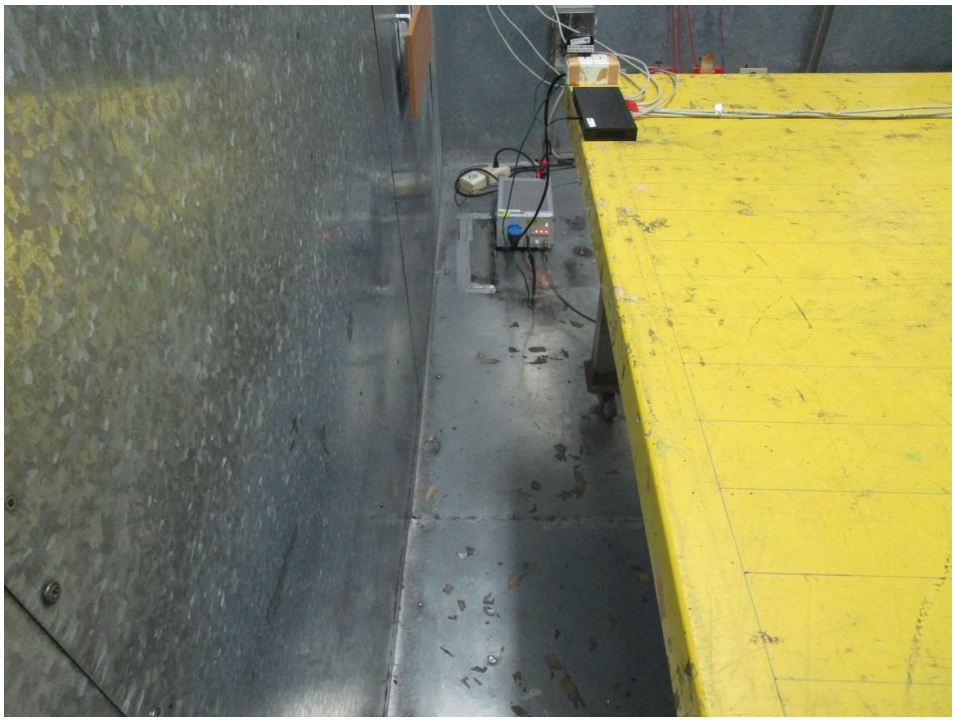

Under Table View

2. Photographs of Radiated Emissions Test Configuration

For radiated emissions below 1GHz

Front View

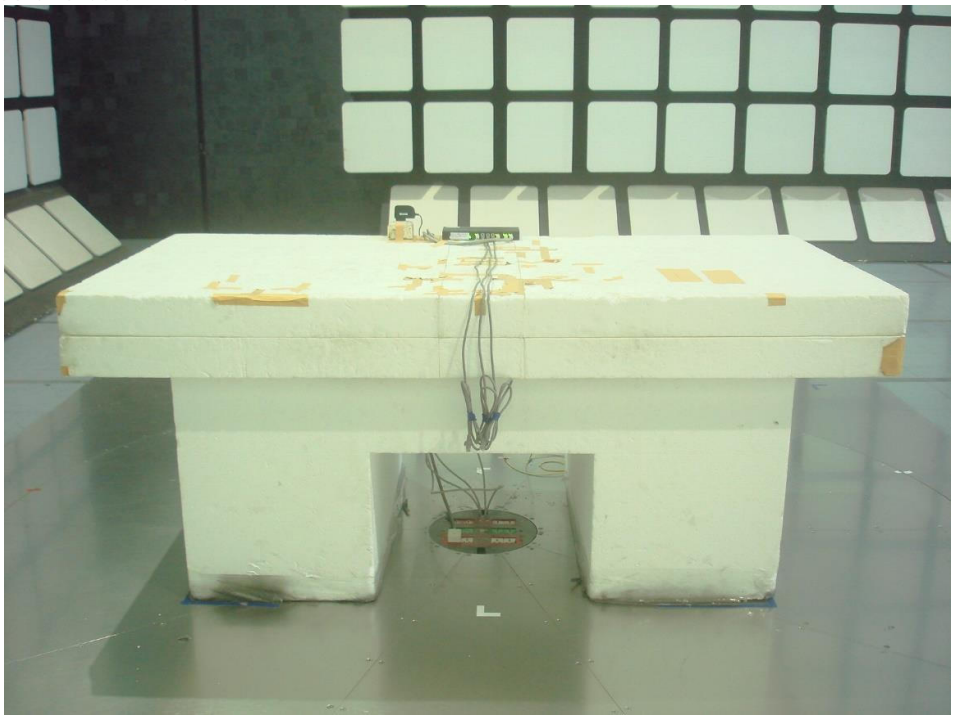

Rear View

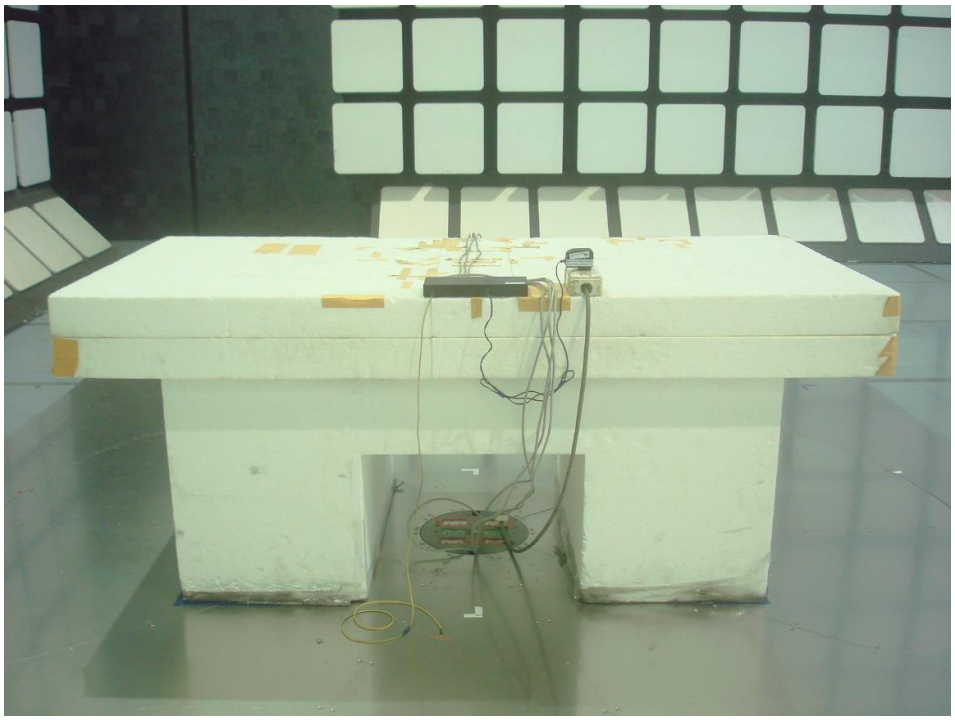

———THE END———