Protective Cabinet

STI-7534, STI-7535 and STI-7535AED

Features:

- Clear, protective polycarbonate cover with siren/strobe alarm.
- Design allows visibility at any angle.
- Complete with mounting hardware and gasket.
- Includes wire shelf, backing plate and siren/strobe alarm — AED models
- External mounting tabs or internal drill dimples.
- Cover includes a coated steel internal mounting plate with a baked on white enamel finish.
- Siren/strobe alarm lens is red. Also available with amber, green, blue or white lens.
- Siren offers 32 user selectable tones.
- Alarm can be set for a piercing 100 dB or 85 dB.
- Independent strobe and siren timing of 15 seconds, 30 seconds, 60 seconds or continuous.
- Powered by a 9 VDC battery or external 12-30 volts.
- Low battery indicator.

STI®

Safety Technology International, Inc.

"We Protect The Things That Protect You."

CONTENTS

Warnings .....page 2
Cleaning Instructions .....page 2
Dimensions .....page 3
Specifications .....page 3
Installation of Cabinet .....page 4
Installation of Alarm .....page 4
Alarm Electronic Setup .....page 5
Alarm Tones .....page 5
Alarm Timing and Volume .....page 5
Alarm Terminal Strip Connections .....page 6
Alarm Electronics Assembly .....page 6
Assembly Parts List .....page 7
Operation .....page 7
Warranty .....page 7
Accessories & Replacement Parts.....page 8

WARNINGS

All units are recommended for indoor use. Unit must be tested periodically to verify the life of battery. STI recommends you change the 9 Volt battery twice a year. When purchasing a siren/strobe alarm, you will need to periodically test the connections to make sure audibles function at a sound level to alert staff. Installer may need to purchase a simple audio-meter, typically available at your local electronics store, to measure the sound in areas where the alarm is expected to be heard during normal noise environment. Results from this test may prove it beneficial to purchase additional siren/strobe alarm units.

All specifications and information shown are current as of publication and subject to change without notice.

CLEANING

1. Rinse cover with water to remove abrasive dust and dirt.
2. Wash with soap or mild detergent using a soft cloth. (DO NOT SCRUB.)
3. Rinse once more, then dry with a soft cloth or chamois.
4. To remove grease or wet paint, rub gently with a cloth wetted thoroughly with naphtha, then wash and rinse. (DO NOT USE RAZOR BLADES.)

DIMENSIONS

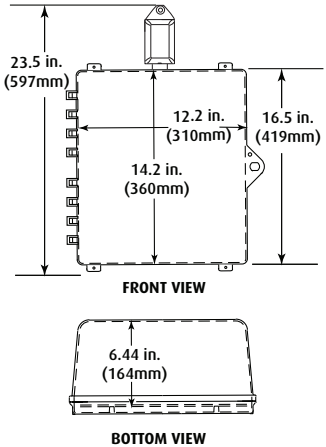

SPECIFICATIONS

OPERATING VOLTAGE	Internal power 9 VDC battery (not included) Remote power 12-30 VDC
OPERATING TEMPERATURE	32°F -120°
POWER CONSUMPTION	Stand by: 50µA Siren low volume: 85mA Siren high volume: 90mA Strobe: 25mA
SIREN VOLUME	Low: 85 dB High: 100 dB
ALARM TIMING	Independent control for siren and strobe: 15s, 30s, 60s, continuous
LOW BATTERY WARNING	LED flash once every 30 seconds
FORM C DRY CONTACTS RATED FOR	0-30VAC/DC, 1 Amp Contacts reset after longest alarm setting
KEY SWITCH	Alarm on: normally closed
ALARM SWITCH	Stand by: normally open contact required
POLYCARBONATE FLAMMABILITY RATING	UL94V-2

INSTALLATION OF CABINET

Note: Installation of cabinet should be before installation of alarm because the mounting bracket butts up to cabinet.

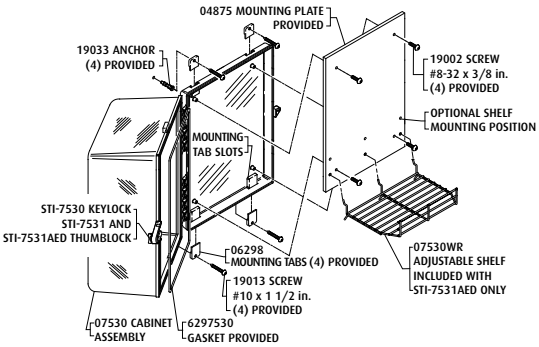

1. Insert the (4) 06298 mounting tabs fully into backbox mounting tab slots. Use rubber mallet if necessary.
2. After selecting a suitable location, place cabinet in closed position, against the wall. Mark and drill (4) 1/4 in. diameter holes. Insert the (4) 19033 anchors. Mount cabinet by driving in the four #10 x 1 1/2 in. screws.
3. For STI-7531AED select one of the two shelf mounting locations, install shelf. Close and lock cabinet.

INSTALLATION OF ALARM

STEP 1 - MOUNTING OPTIONS

To Key Mount Plate or into Wall without Electrical Box

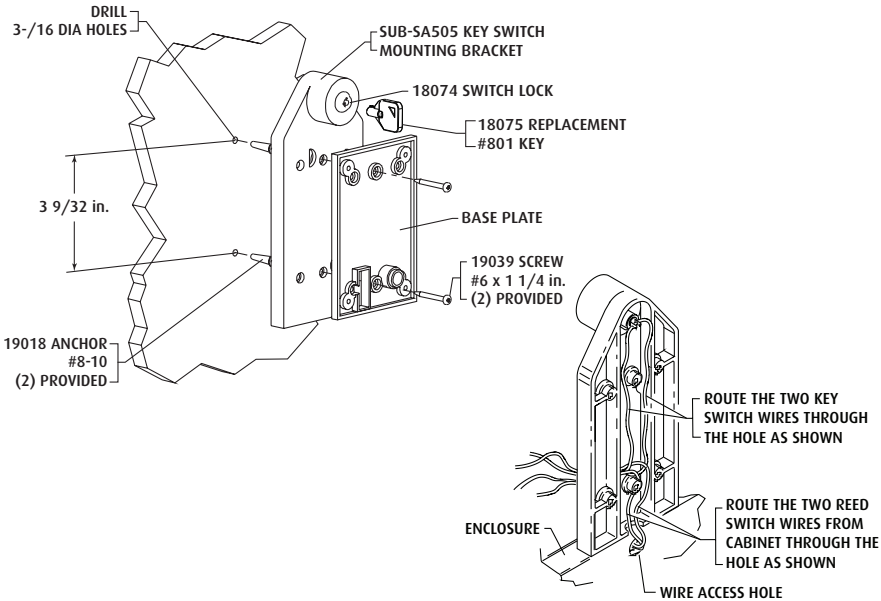

STEP 2 - ELECTRONIC SETUP - SELECT ALARM TONE AND TIMING SEQUENCE

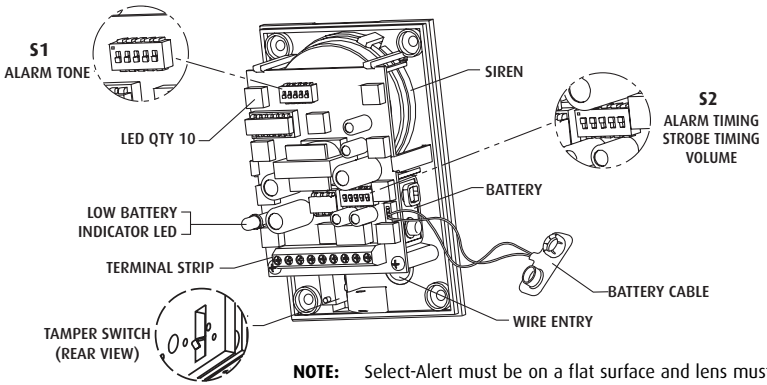

NOTE: Select-Alert must be on a flat surface and lens must be installed or the tamper switch will trigger the alarm.

STEP 3 - ALARM TONES - S1

		1 2 3 4 5	
✣	1	0 0 0 0 0	BUZZ
	2	1 0 0 0 0	SLOW ON/OFF
	3	0 1 0 0 0	SLOW SIREN
	4	1 1 0 0 0	3 BEEP/PAUSE/REPEAT
	5	0 0 1 0 0	UFO FAST
	6	1 0 1 0 0	FAST SIREN
	7	0 1 1 0 0	#5 FAST
	8	1 1 1 0 0	#2 MEDIUM
	9	0 0 0 1 0	#5 MEDIUM
	10	1 0 0 1 0	SWOOP MEDIUM
	11	0 1 0 1 0	#3 MEDIUM
	12	1 1 0 1 0	BUZZ TONE
	13	0 0 1 1 0	STEADY FAST
	14	1 0 1 1 0	SWOOP SLOW
	15	0 1 1 1 0	CONTINUOUS
	16	1 1 1 1 0	FAST REPEAT

	1 2 3 4 5	
17	0 0 0 01	STANDARD ALARM
18	1 0 0 0 1	#3 FAST
19	0 1 0 0 1	#5 SLOW
20	1 1 0 0 1	FAST BEEP
21	0 0 1 0 1	SOUND A
22	1 0 1 0 1	SOUND B
23	0 1 1 0 1	SOUND C
24	1 1 1 0 1	SOUND D
25	0 0 0 1 1	SOUND D LOUD
26	1 0 0 1 1	SOUND E
27	0 1 0 1 1	SOUND F
28	1 1 0 1 1	SOUND G
29	0 0 1 1 1	SOUND H
30	1 0 1 1 1	#4 LOW
31	0 1 1 1 1	SOUND K
32	1 1 1 1 1	CONTINUOUS FAST

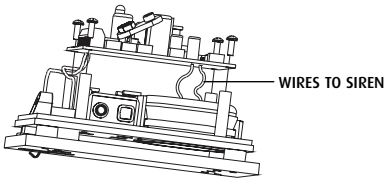

NOTE: Sound may be disabled by clipping wires to the siren. THIS WILL VOID ALL WARRANTIES. Remove two screws on circuit board; leave enough length of wire to possibly reattach in the future. Then insulate wires to prevent shorting to electronic components.

STEP 4 - ALARM TIMING AND VOLUME - S2

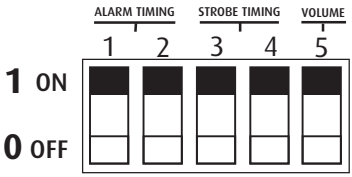

	ALARM TIMING	SIREN 1	SIREN 2	STROBE 3	STROBE 4	VOLUME 5
✣	15 seconds	1	1	1	1	High
	30 seconds	1	0	1	0	1
	60 seconds	0	1	0	1	Low
	Continuous	0	0	0	0	0

1 = ON 0 = OFF

✣Factory default settings

STEP 5 - ELECTRONICS ASSEMBLY

Wiring: After mounting circuit board assembly, connect wires. Refer to terminal strip connections (step 6).

Lens installation: Slide lip of lens behind circuit board mounting plate. Rotate lens into position. Secure with tamperproof screw and special wrench. ⚠ Unit will not operate properly if lens cover is not installed.

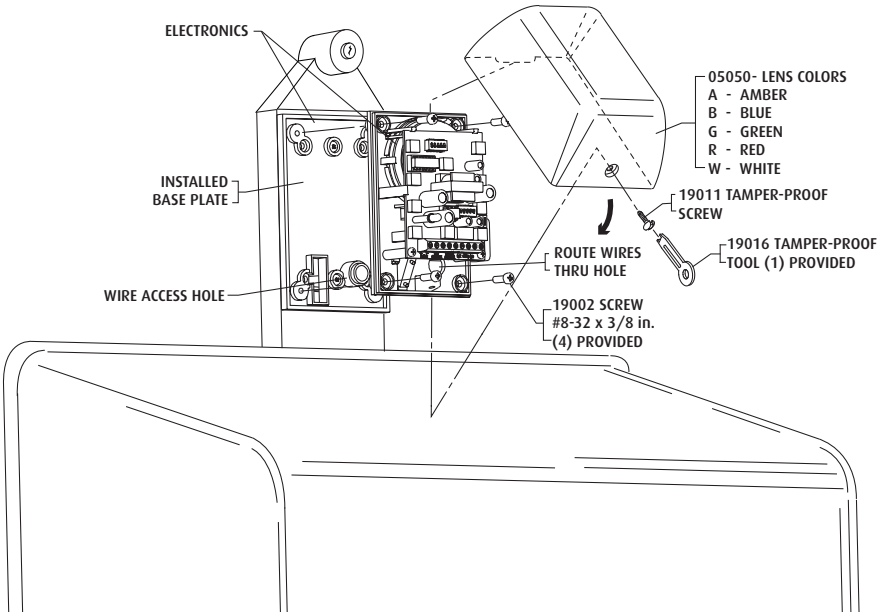

STEP 6 - TERMINAL STRIP CONNECTIONS

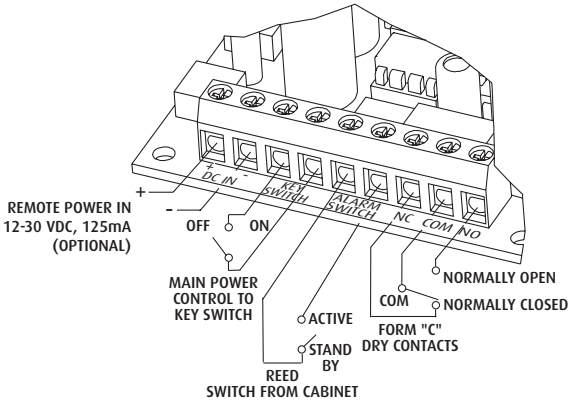

NOTE: "DC IN" are the only polarity sensitive terminals. When external power is used, battery will act as a backup. "Dry Contacts: NC, COM, NO" are used for remote alarm monitoring.

ASSEMBLY PARTS LIST

SIREN/STROBE ALARM

QTY.	PART #	DESCRIPTION
1	05000	Electronics assembly *(includes base plate & electronics assembly)*
1	05050-R	Red lens (unless otherwise specified)
1	09723	Key switch mounting bracket
2	18075	#801 key
1	18074	Switch lock
1	18151	N.C. reed switch and magnet (installed in cabinet)
4	19002	Screw #8-32 x 3/8 in.
2	19039	Screw #6 x 1 1/4 in.
2	19018	Anchor #8-10
1	19011	#8-32 x 1/2 in. tamper screw
1	19016	Tamper wrench
1	BAT-9VDC	9 volt battery

CABINET

1	07530	Hinged polycarbonate enclosure
4	06298	Mounting tabs
4	19013	#10 x 1 1/2 in. screw
4	19033	Plastic anchor
1	07530WR	Wire shelf (Included with AED models only)
1	04875	Mounting plate
4	19002	#8-32 x 3/8 in. screw
1	06297530	Gasket
1	07503	Thumb lock - STI-7535 models
1	18050	Key lock } STI-7534 models
2	18054	CH751 Key } STI-7534 models

STEP 7 - OPERATION

- Turn key switch on to arm.
- Cycle key switch to reset alarm.
- Alarm will sound when cabinet is opened (alarm switch is electronically closed), alarm cover is removed or unit is removed from the wall.
- To service, turn key switch off.

WARRANTY INFORMATION

- Three year guarantee against breakage of polycarbonate in normal use (one year on electro mechanical and electronic components).

ACCESSORIES AND REPLACEMENT PARTS

AED-LBL	AED label - 2 included (applied to sides of cabinet; must be factory installed)
STI-SA5000-R	Replacement Siren/Strobe Alarm
18054	Replacement key for cabinet lock on STI-7534
18075	Replacement key for Siren/Strobe Alarm
07530WR	Wire shelf (included with AED models)

Safety Technology International, Inc.

2306 Airport Road
Waterford, Michigan 48327-1209
Phone: 248-673-9898 • Toll Free: 800-888-4784 • Fax: 248-673-1246

Safety Technology International (Europe) Ltd.
Unit 49G Pipers Road • Park Farm Industrial Estate • Redditch
Worcestershire • B98 0HU • England • Tel: 44 (0) 1527 520 999
Fax: 44 (0) 1527 501 999 • Freephone: 0800 085 1678 (UK only)
E-mail: info@sti-europe.com • Web: www.sti-europe.com

Printed in USA SUBJECT TO CHANGE WITHOUT NOTICE Inst. Sht. STI-7535/STI-7535AED, DEC2010