STI AED Protective Cabinets

STI-7533AED

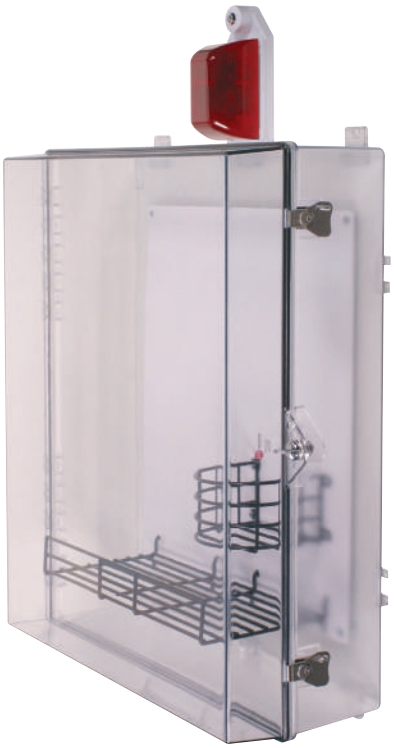

STI-7555AED

PRODUCT OVERVIEW

Multipurpose cabinets for remote AED (Automated External Defibrillator) units, which require physical or environmental protection. Helps guard against vandalism (accidental or intentional), as well as dirt, dust and grime. Cabinets mount on the wall enabling the unit to be stored in a central location. The cabinets are available with a thumb lock, which helps deter wrongful users from the unit and has an additional eyelet for a secondary safety seal.

HOW THEY WORK

Cabinets are constructed of clear polycarbonate which allows the unit within to be highly visible from almost any angle. They are molded from the same material used in football helmets. When the cabinet is opened the optional alarm emits an ear piercing siren. The siren/strobe alarm is a combination of alarm and super bright flashing LEDs (shown right). It offers independent strobe and siren timing of 15 seconds, 30 seconds, 60 seconds or continuous. The siren alarm (shown left) emits for 30 seconds, 3 minutes or continuously (as preset by user). A key override will silence the alarm.

FEATURES

- Clear polycarbonate; constructed from the same material used in football helmets.
- Cabinet is available without alarm, with external siren alarm or siren/strobe alarm.
- Includes a coated steel internal mounting plate with a baked on white enamel finish.
- Additional eyelet can be used for secondary safety seal.
- External mounting tabs or internal drill dimples.
- Complete with mounting hardware and gasket. Tamperproof mounting screws available.
- Design allows visibility at almost any angle and does not require a sign.
- Includes thumb lock and adjustable wire shelf.
- Unlike metal cabinets, this version offers safe, rounded corners. It does not dent and there is no worry of paint chips.
- Typical working properties of polycarbonate are -40° to 250°F (-40° to 121°C).
- Three year guarantee against breakage of polycarbonate in normal use (one year on electro mechanical and electronic components).

STI-7533AED and STI-7553AED Series

- Visible siren alarm helps deter vandalism and tampering.
- Siren alarm may be set for piercing 105 dB warning horn or softer 95 dB (see STI-6400 for complete alarm details).
- Siren alarm can be set to sound for 30 seconds, 3 minutes or indefinitely (unless disarmed with key supplied or until battery is drained).
- Includes a 9 VDC alkaline battery.

STI-7535AED and STI-7555AED Series

- Siren/strobe alarm is a combination of alarm and super bright flashing LEDs.
- Independent strobe and siren timing of 15 seconds, 30 seconds, 60 seconds or continuous.
- Siren offers 32 tones (see STI-SA5000 for complete alarm details).
- Alarm has a low battery indicator and is powered by a 9 VDC alkaline battery (not included) or external 12-13 volts.

STI AED Protective Cabinets

Dimensions and Technical Information

MODELS AVAILABLE

STI-7531AED*	Polycarbonate cover with backplate, wire shelf and thumb lock
STI-7551AED*	Polycarbonate cover with backplate, wire shelf and thumb lock
STI-7533AED	Polycarbonate cover with backplate, wire shelf, thumb lock and siren alarm
STI-7553AED	Polycarbonate cover with backplate, wire shelf, thumb lock and siren alarm
STI-7535AED	Polycarbonate cover with backplate, wire shelf, thumb lock and siren/strobe alarm
STI-7555AED	Polycarbonate cover with backplate, wire shelf, thumb lock and siren/strobe alarm

***Models with no alarm**

Accessories

SUB-65	Optional breakaway ties (5 included)
AED-LBL	Optional AED Label – 2 included (applied to sides of cabinet; factory installed only)
STI-6453AED	Replacement siren alarm
STI-SA5000-R	Replacement audio visual alarm
SUB-SA505	Replacement key switch mounting plate for audio visual alarm
05050-R	Replacement lens red (also available in amber, blue, green or white)
07530WR	Wire shelf for STI-7530 series (included)
07550WR	Wire shelf for STI-7550 series (included)
07551WR	Wire oxygen rack for STI-7550 series (included with STI-7551, STI-7553, STI-7555)
18075	Replacement Key for siren/strobe alarm
19032	Replacement Key #2341 for siren alarm

WARRANTY

Three year guarantee against breakage of polycarbonate in normal use (one year on electro mechanical and electronic components).

	A	B	C	D	E
STI-7531AED	12.2 in. (310mm)	14.2 in. (360mm)	6.44 in. (164mm)	16.5 in. (419mm)	N/A
STI-7533AED					23 in. (584mm)
STI-7535AED					23.5 in. (597mm)
STI-7551AED	19.75 in. (502mm)	24.75 in. (629mm)	7.31 in. (186mm)	27.5 in. (699mm)	N/A
STI-7553AED					34.7 in. (881mm)
STI-7555AED					35 in. (889mm)

***Additional eyelet:**
STI-7520 and STI-7530 Series - 1/4" diameter
STI-7550 Series - 5/8" diameter

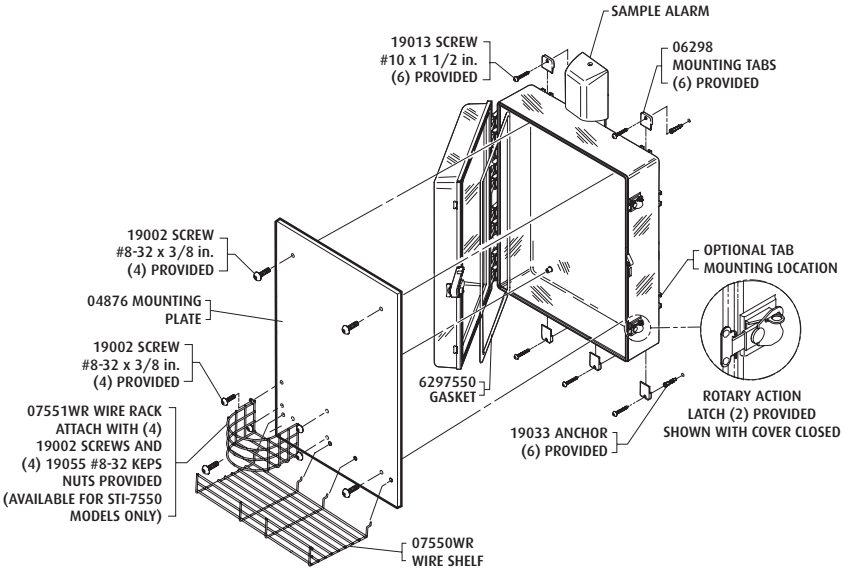

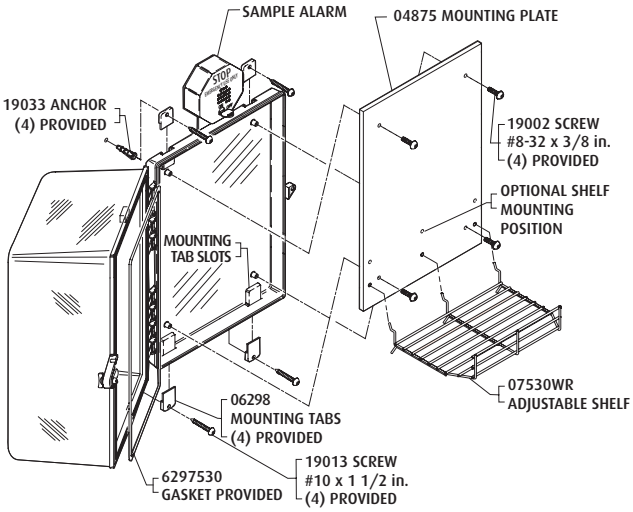

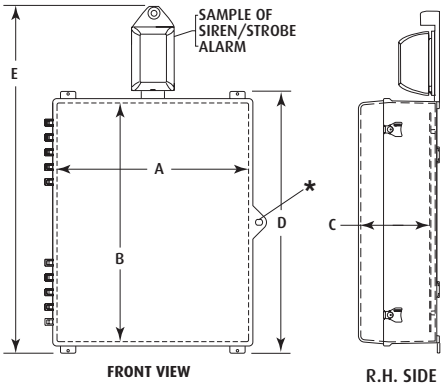

Safety Technology International, Inc.

2306 Airport Road
Waterford, Michigan
48327, USA

Tel: 248-673-9898
Fax: 248-673-1246
Toll-free: 800-888-4784
info@sti-usa.com
www.sti-usa.com

Unit 49G Pipers Road
Park Farm Industrial Estate
Redditch, Worcestershire
B98 OHU England

Tel: 44 (0) 1527 520 999
Fax: 44 (0) 1527 501 999
Free: 0800 085 1678 (UK)
www.sti-europe.com

Printed in U.S.A., © 2003 - 2009 Safety Technology International, Inc.

Subject to change without notice. 12/10