STI Fire Extinguisher Theft Stopper®

STI-6200

Wireless Now Available

FEATURES

- Highly visible "stop sign" design discourages wrongful use of extinguisher.
- Sounds a powerful 105 dB warning horn when activated, drawing attention in a hurry (95 dB low volume setting can be set if desired).
- Virtually indestructible polycarbonate housing.
- Compact design 5.375 in. (137mm) in diameter and 2 in. (51mm deep). Mounts easily next to extinguisher.
- STI-6200WIR supervised wireless 433 mhz (4 or 8-channel receiver required). Up to 1000 foot (line of sight) range.
- Remote powered 12 VDC model available for special applications (STI-6200R).
- Deactivation cable provided for service by authorized personnel.
- 9 VDC alkaline battery is provided.
- For fire extinguishers housed in cabinets, refer to STI-6255 Mini Theft Stopper®.
- Three year guarantee against breakage of polycarbonate in normal use (one year on electro mechanical and electronic components).

PRODUCT OVERVIEW

If you are fed up with replacing your fire extinguishers, this sturdy, tamperproof, self-contained alarm is the answer. It has proven highly effective in helping stop theft, misuse or vandalism of fire extinguishers. Yet, it leaves the extinguisher accessible for emergencies and does not interfere with fire fighting in any way.

HOW IT WORKS

If the protected fire extinguisher is moved from its normal position, the device emits a piercing alarm. Also, the highly visible stop sign design and the words "STOP, EMERGENCY USE ONLY" discourages wrongful use. The device is easy to install and a deactivation cable is supplied for ease in servicing the extinguisher. A 9 VDC alkaline battery is included.

STI Fire Extinguisher Theft Stopper®

Dimensions and Technical Information

MODELS AVAILABLE

STI-6200	Fire Extinguisher Theft Stopper
STI-6200R	Fire Extinguisher Theft Stopper with 12 volt, remote powered horn
STI-6200WIR	Wireless Fire Extinguisher Theft Stopper
STI-6200WIR4	Wireless Fire Extinguisher Theft Stopper with 4-Channel Receiver
STI-6200WIR8	Wireless Fire Extinguisher Theft Stopper with 8-Channel Receiver
STI-V6200WIR4	Wireless Fire Extinguisher Theft Stopper with 4-Channel Voice Receiver
STI-34104	4-Channel Receiver
STI-34108	8-Channel Voice Receiver
STI-V34104	4-Channel Receiver
STI-30104	Lamp Controller
18015-9	6 in. deactivation cable used during service times
18015-RC	Replacement cable and crimp 16-18 in. long

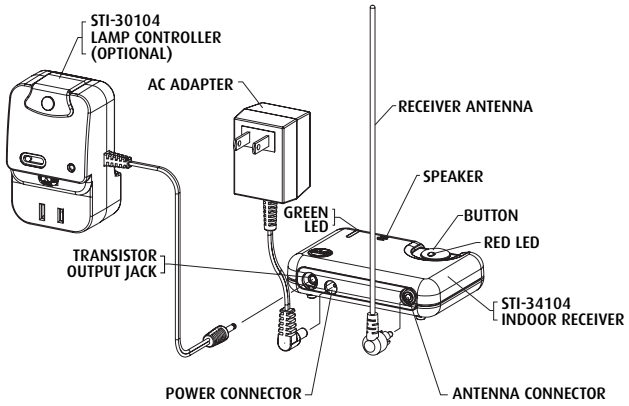

STI-34104

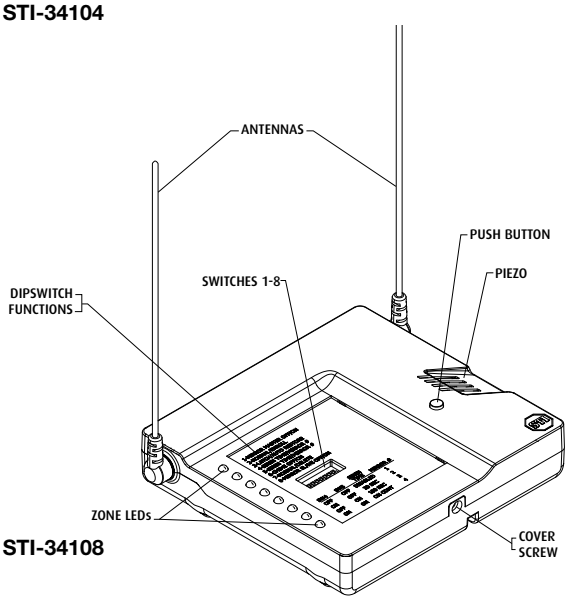

STI-34108

APPROVALS & WARRANTY

TESTING

STI-6200, STI-6200WIR & STI-6200WIR4

- FCC & IC Compliant
- CE Approved

WARRANTY

Three year guarantee against breakage of polycarbonate in normal use (one year on electro mechanical and electronic components).

PRODUCT INFORMATION

This sturdy, tamper resistant, self-contained device helps prevent the theft or vandalism of fire extinguishers. Experience has shown its highly visible "stop sign" design is itself an effective deterrent. The device contains a 9 VDC battery (included), a selectable 95 or 105 dB horn and a unique steel cable operated switch mechanism. When the extinguisher is removed, the galvanized steel cable is pulled out of the alarm and the horn sounds.

- Reduces theft of vital fire extinguishers
- Reduces vandalism of fire extinguishers
- Completely self-contained
- Does not interfere with fire fighting in any way
- Remote powered 12 VDC version available
- Lifetime warranty against breakage of polycarbonate housing

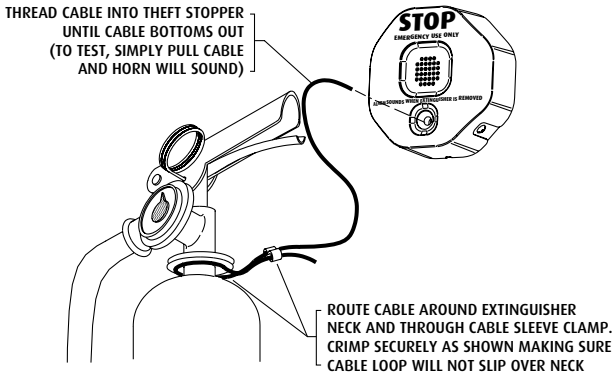

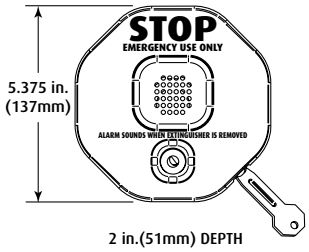

Safety Technology International, Inc.

2306 Airport Road
Waterford, Michigan
48327, USA

Tel: 248-673-9898
Fax: 248-673-1246
Toll-free: 800-888-4784
info@sti-usa.com
www.sti-usa.com

Unit 49G Pipers Road
Park Farm Industrial Estate
Redditch, Worcestershire
B98 OHU England

Tel: 44 (0) 1527 520 999
Fax: 44 (0) 1527 501 999
Free: 0800 085 1678 (UK)
www.sti-europe.com

Printed in U.S.A., © 1987 - 2009 Safety Technology International, Inc.