SEAMLESS Connect
Universal dvLED Mounting System
LEDUNVS Series

***Actual configuration may vary**

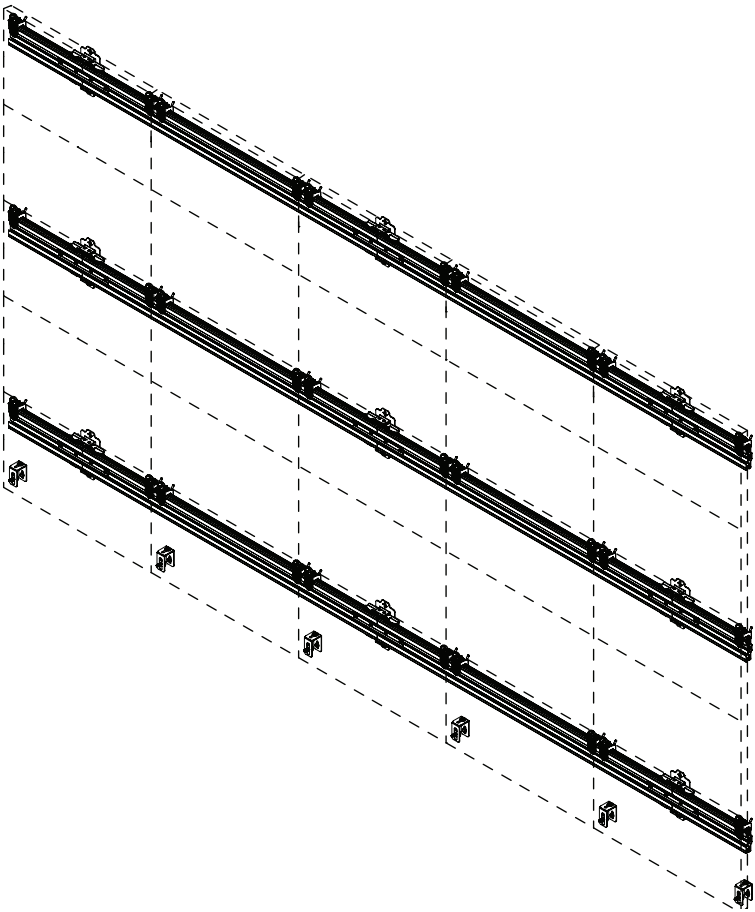

ENG

⚠ WARNING

This product is designed to be installed on plywood walls. Hardware is included for plywood installation. This product is designed to be installed on flat, unobstructed, vertical walls. Do not install on curved or angled walls. Before installing make sure the supporting surface will support the combined load of the equipment and hardware. Screws must be tightly secured. Do not overtighten screws or damage can occur and product may fail. Never exceed the Maximum Load Capacity. Always use an assistant or mechanical lifting equipment to safely lift and position equipment. This product is intended for indoor use only. Use of this product outdoors could lead to product failure or personal injury. Be careful not to pinch fingers when operating the mount. For support please call customer care at 1-800-865-2112 or visit www.peerless-av.com.

Symbols

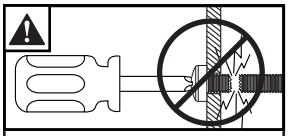

Do not overtighten screws.

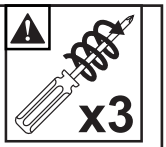

Screws must get at least three full turns and fit snug.

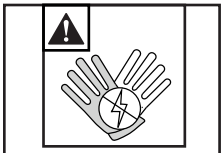

Wear anti-static gloves.

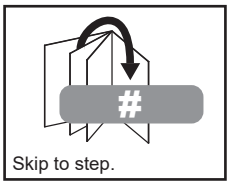

Skip to step.

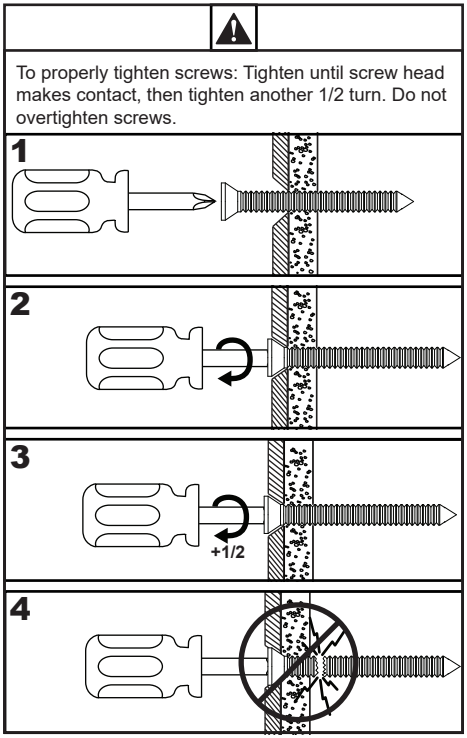

To properly tighten screws: Tighten until screw head makes contact, then tighten another 1/2 turn. Do not overtighten screws.

Tools Needed for Assembly.

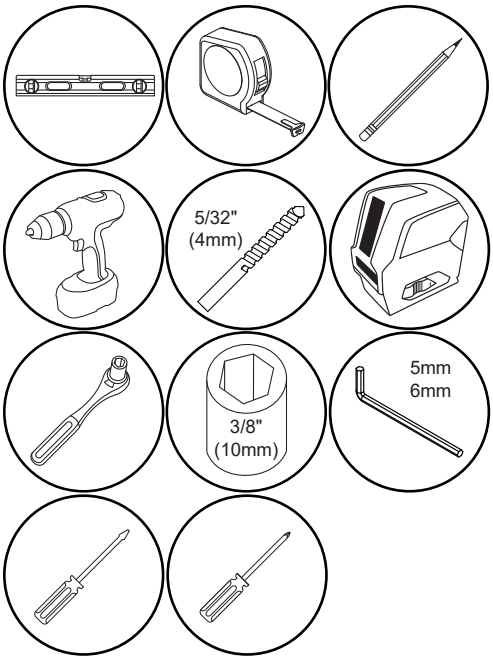

Parts (Before beginning, make sure you have all parts shown below). *Refer to parts list included with your model.

Parts List

	Description	Qty.*
A	horizontal extrusion expandable	
B	horizontal extrusion 1200mm	
C	horizontal extrusion 600mm	
D	wall plate	
E	latch assembly	
F	depth adjustment bracket	
G	#14 x 1.75" wood screw and 1/4" SAE washer	
H	M5/M6 cup washer	
I	M5 flat head screw	
J	M8/M10 cup washer	
K	M6 flat head screw	
L	M8 flat head screw	
M	M10 flat head screw	
N	end cap	

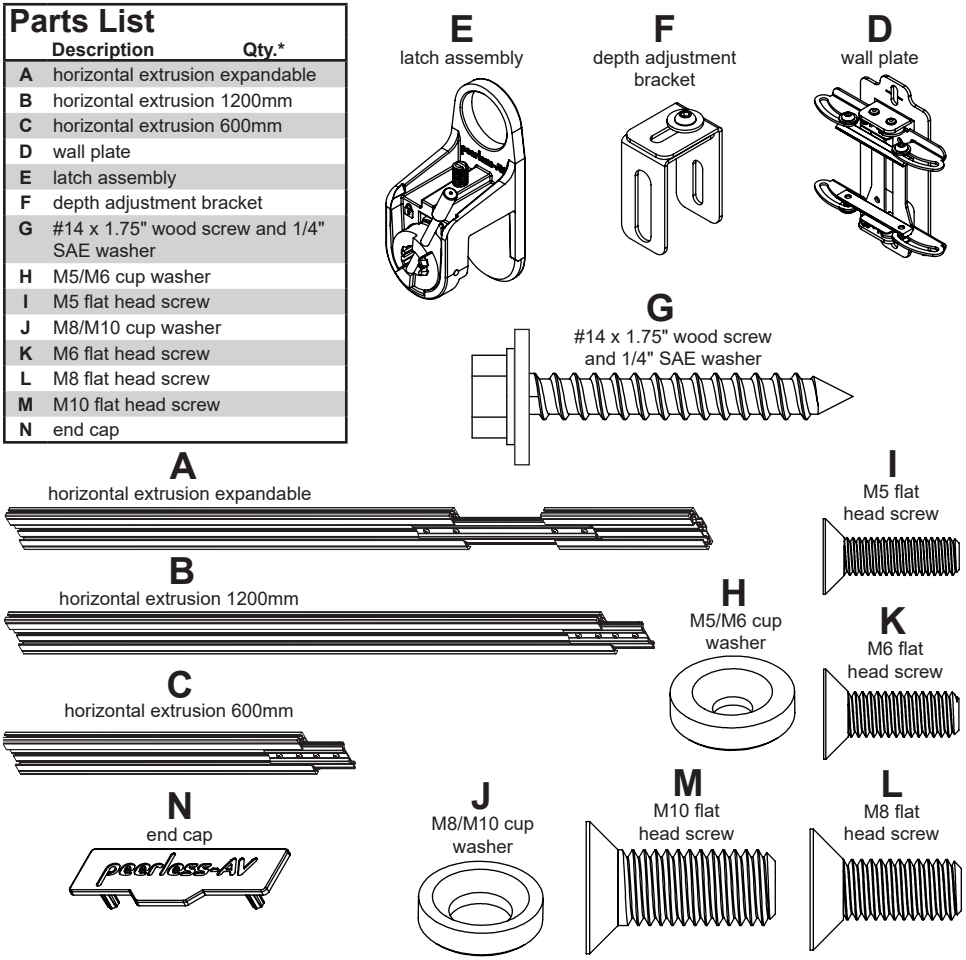

Parts List

	Description	Qty.
O	spacer	2
P	3mm allen wrench	1
Q	4mm allen wrench	1
R	spacer extension	2
S	shim plate	2
T	laser target	2
U	M4 flat head screw	12

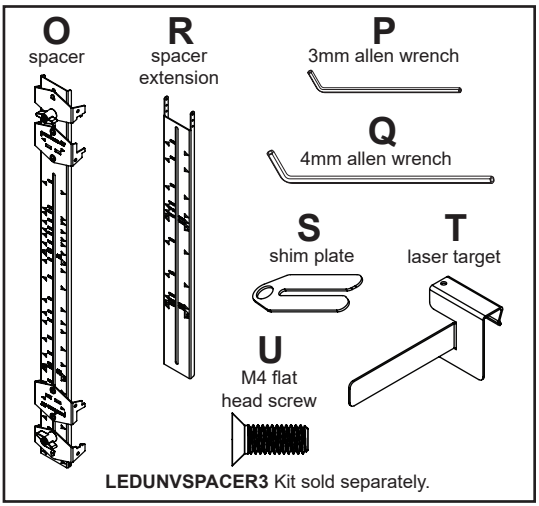

1-1

Viewing from the front, arrange extrusions as shown when building assembly. Expandable extrusion shall be installed on the far right side, note orientation.

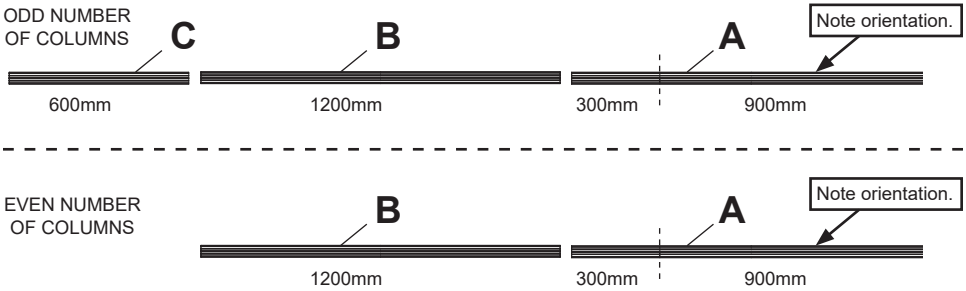

1-2

For displays narrower than 600mm, determine the required extrusion length with the following extrusion cut to length formula:

Video Wall Width - 0.25" (6mm) = Extrusion Length

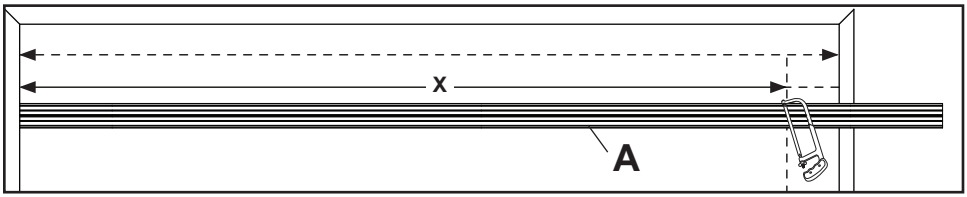

1-3

Slide wall plates onto extrusions and tighten with the wall plate fully extended. * = Refer to step 2 (sequence) for wall plate spacing.

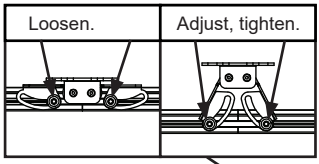

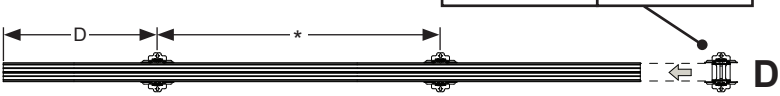

For odd number of columns: Place one wall plate behind column one and skip every other column.

For even number of columns: Place one wall plate behind display columns one and two, then skip every other column.

1-4

Connect two horizontal extrusions using connector plate.

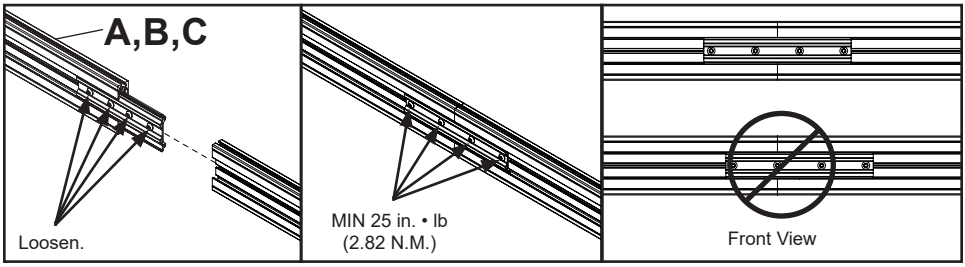

2

Determine the number of horizontal rows in your video wall. Use the corresponding dimensions from table on the following step based on video wall having either an odd or even number of rows. Note, for displays taller than 610mm, the mount will always start at the bottom row and will not skip rows.

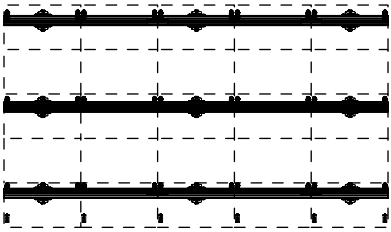

Odd number of rows.

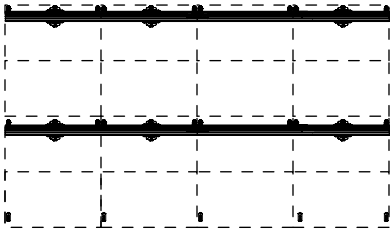

Even number of rows.

2a-1

See table and drawing below for dimensions that will locate mount on the wall.

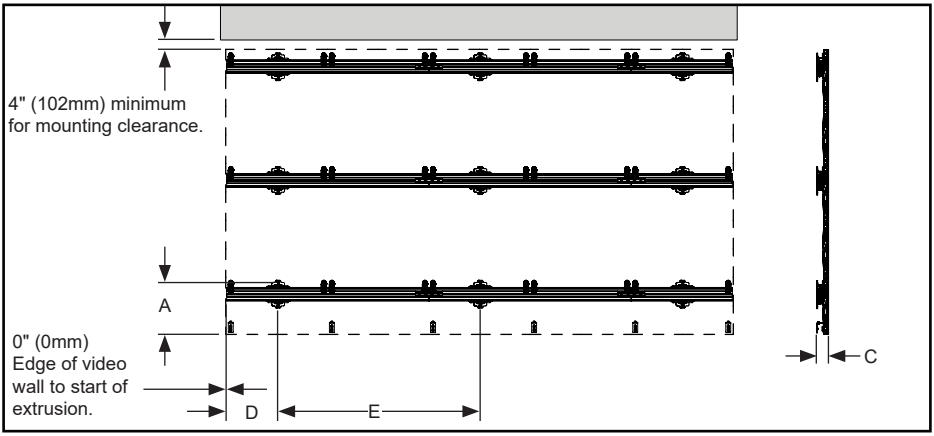

"D" = 1/2 of Display Width, Side of video wall to the center of first wall plate.
"E" = Display Width [x2], Spacing of wall plates.

2a-2

If display model is not listed on table in following step, use formula provided to calculate the dimension ("A") used to locate mount on the wall. Y = bottom of display tile to top pair of mounting holes on back of display.

A = Y + 0.03" (0.74mm)

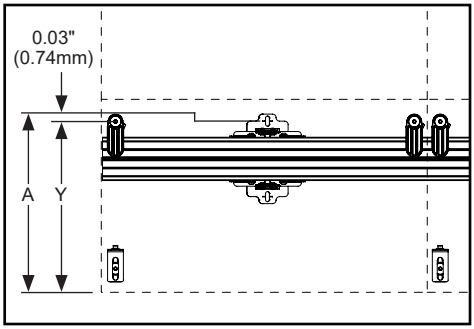

For odd number of rows, start with extrusion at bottom row.

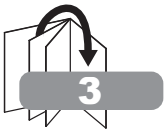

2b-1

See table and drawing below for dimensions that will locate mount on the wall.

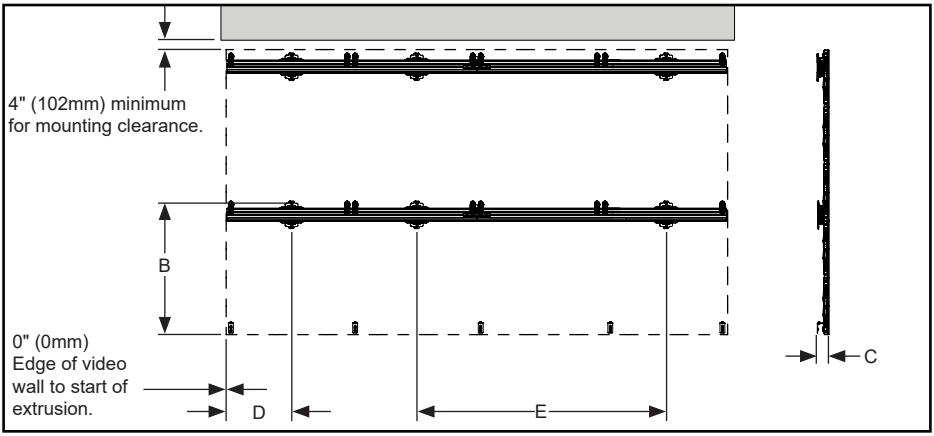

"D" = 1/2 of Display Width, Side of video wall to the center of first wall plate.
"E" = Display Width [x2], Spacing of wall plates.

2b-2

If display model is not listed on table in following step, use formula provided to calculate the dimension ("B") used to locate mount on the wall. Y = bottom of display tile to top pair of mounting holes on back of display.

B = Y + 0.03" (0.75mm)

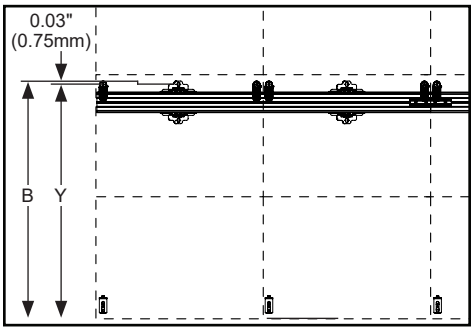

For even number of rows, start with extrusion at second row of displays from the bottom.

Compatible Display	Bottom of video wall to notch of first wall plate (Odd number of rows) Dimension A	Bottom of video wall to notch of first wall plate (Even number of rows) Dimension B	System Depth Range Dimension C
Absen A27 Pro/Plus	11.2" (285mm)	24.7" (628mm)	3.6" - 5.2" (92-132mm)
Absen A27-V3	11.2" (285mm)	24.7" (628mm)	3.4" - 5" (88-128mm)
Absen CL	11.2" (285mm)	24.7" (628mm)	4" -5.5" (100-140mm)
Absen CL V2	11.2" (285mm)	24.7" (628mm)	3.7" - 5.2" (93-133mm)
Absen K Plus	18.9" (480mm)	38.6" (980mm)	4"-5.6" (103-143mm)
Absen KL II	6.1" (155mm)	13.2" (335mm)	4.1"-5.7" (105-145mm)
Absen KLCOB V2	12.7" (323mm)	26" (660mm)	3.2" - 4.8" (82-122mm)
Absen NX 240x1080	41.8" (1062mm)	84.3" (2142mm)	3.4"-5" (87-127mm)
Absen NX 240x540	20.6" (522mm)	41.8" (1062mm)	3.4"-5" (87-127mm)
AOTO CV	12.4" (315mm)	25.7" (667mm)	3.2" - 4.7" (80-120mm)
AWOL Vision AWALL	12.1" (308mm)	25.4" (645mm)	3.1" - 4.6" (78-118mm)
Barco NT	12.6" (319mm)	25.9" (657mm)	3.1" - 4.7" (79-119mm)
Barco XT	12.7" (323mm)	26.2" (664mm)	4.4" - 5.9" (111-151mm)
Blue Square BSX	12.6" (321mm)	25.9" (673mm)	3" - 4.5" (75-115mm)
BOE BYH-B	12.4" (316mm)	25.7" (653mm)	3.5" - 5.1" (90-130mm)
Christie CSII	12.1" (308mm)	25.4" (645mm)	3" - 4.6" (75-117mm)
Christie CSIII	12.1" (308mm)	25.4" (645mm)	2.8" - 4.4" (72-112mm)
Dahua CH II	12.5" (318mm)	25.8" (655mm)	3.3" - 4.8" (83-123mm)
DVS Dioplex HD	38.4" (975mm)	77.8" (1975mm)	4.9"-6.5" (125-165mm)
GCL GTV	11.1" (283mm)	24.4" (620mm)	2.9" - 4.4" (73-113mm)
HIKVISION CW-2F	12.5" (317mm)	25.8" (655mm)	2.7" - 4.3" (69-109mm)
HIKVISION CWF / CWF III / CWFH III	12.5" (317mm)	25.8" (655mm)	3.5" - 5.1" (89-129mm)
HIKVISION ZWDH	12.6" (321mm)	25.9" (659mm)	3.4" - 4.9" (86-126mm)
Hisense HIK	20.5" (520mm)	41.7" (1060mm)	3.8"-5.4" (97-137mm)
Hisense HIP	12.5" (317mm)	25.8" (655mm)	3.1" - 4.7" (79-119mm)
Hisense XIH	12.1" (307mm)	25.4" (645mm)	3.2" - 4.8" (82-122mm)
i5 LED II	12.6" (321mm)	25.5" (648mm)	3.9" - 5.4" (98-138mm)
Imaginis 1.x-Mod	12.2" (310mm)	26" (662mm)	3.9" - 5.4" (98-138mm)
InfiLED EZ Series	18.5" (470mm)	38.2" (970mm)	4.7"-6.2" (119-159mm)
InfiLED WK / WP / WT	12" (305mm)	25.3" (642mm)	2.8" - 4.4" (72-112mm)
Jupiter ZAVUS XP-P0.7	9.1" (230mm)	19.7" (500mm)	2.7"-4.3" (68-108mm)
Jupiter ZAVUS XP-P0.9/1.2	11.3" (288mm)	24.6" (625mm)	2.7" - 4.3" (69-109mm)
Just Video 05-IND-A01	12" (306mm)	25.3" (643mm)	3.2" - 4.8" (82-122mm)
Lampro BNX II	38.2" (970mm)	77.6" (1970mm)	3.1"-4.7" (80-120mm)
Lang Legend	12.6" (321mm)	25.9" (659mm)	3.1" - 4.7" (79-119mm)
LED Studio SOLARIS	12.5" (318mm)	25.8" (655mm)	3.2" - 4.8" (82-122mm)
Ledman XS	18.5" (470mm)	38.2" (970mm)	3.6"-5.5" (91-141mm)
Leyard VDS	12.5" (318mm)	25.8" (655mm)	3.3" - 4.9" (84-124mm)
LG LSBB (GD)	12.7" (324mm)	26" (661mm)	3.8" - 5.3" (96-136mm)
LG LSBC	38.4" (975mm)	77.8" (1975mm)	4.3"-5.8" (108-148mm)
LG LSCA (1000 Tall) GK	38.3" (972mm)	77.6" (1972mm)	4.1"-5.7" (105-145mm)
LG LSCA (1000 Tall) GN	38.3" (972mm)	77.6" (1972mm)	4.3"-5.8" (108-148mm)
LG LSCA (500 Tall) GK2	18.6" (472mm)	38.3" (972mm)	4.1"-5.7" (105-145mm)
LG LSCB	12" (305mm)	25.3" (642mm)	2.9" - 4.4" (73-113mm)
LG LSCB Portrait	22.7" (576mm)	46.3" (1176mm)	2.9" - 4.4" (73-113mm)
LG LSGA-GK	38" (965mm)	77.4" (1965mm)	5.3"-6.8" (134-174mm)
LG LWBC (1000 Tall) GD	38.4" (975mm)	77.8" (1975mm)	4.2"-5.8" (107-147mm)
LG LWBC (750 Tall) DD	28.5" (725mm)	58.1" (1475mm)	4.3"-5.9" (109-149mm)
LG LSBE	12.5" (318mm)	25.8" (656mm)	4.4" - 6" (112-152mm)
LG LSCC-CZ	12" (305mm)	25.3" (642mm)	3"-4.6" (76-116mm)
LG LSCC-GZ	12" (305mm)	25.3" (642mm)	3"-4.6" (76-116mm)
Linsn N169	12.7" (322mm)	26" (660mm)	4.7" - 6.3" (120-160mm)
Macropix Imaginis J	12.3" (313mm)	25.6" (650mm)	4" - 5.6" (101-141mm)
Macropix Mobilis F2.6XRMBV-MOD	28.6" (725mm)	58.1" (1475mm)	4"-5.6" (101-141mm)
Macropix Mobilis FT	18.7" (475mm)	38.4" (975mm)	2.9" - 4.5" (72-115mm)
MAXHUB M27	12.5" (318mm)	26" (661mm)	2.9" - 4.5" (72-115mm)
Panavisual CS261	18.5" (470mm)	38.2" (970mm)	4.1"-5.6" (105-143mm)
Panavisual CU181	17.7" (450mm)	36.6" (930mm)	3.7"-5.3" (94-134mm)

Compatible Display	Bottom of video wall to notch of first wall plate (Odd number of rows) Dimension A	Bottom of video wall to notch of first wall plate (Even number of rows) Dimension B	System Depth Range Dimension C
Pensar Immersive	11.3" (288mm)	24.6" (625mm)	3.4" - 5.1" (86-129mm)
Philips 27BDL6000	12.7" (322mm)	26.1" (664mm)	4" - 5.6" (102-142mm)
Philips 27BDL9000	12.7" (322mm)	26.1" (664mm)	3.8" - 5.4" (97-137mm)
Philips 27HDL51XXIP	12.5" (319mm)	25.8" (656mm)	3.1" - 4.6" (78-117mm)
Philips 28HDL5000	18.8" (478mm)	38.5" (978mm)	3.3"-4.9" (85-125mm)
Philips 44HDL5000	38.5" (978mm)	77.9" (1978mm)	3.4" - 5" (87-127mm)
Planar DLP-27	12.6" (320mm)	26" (660mm)	4.3" - 5.8" (109-148mm)
Planar DLP-36	26" (660mm)	52.8 (1341mm)	4.3" - 5.8" (109-148mm)
Planar MGP	12.7" (322mm)	26" (660mm)	3.8" - 5.4" (97-137mm)
Planar TVF	12.6" (320mm)	26" (660mm)	3.9" - 5.5" (98-139mm)
Primeview 220 Fusion Max	12.5" (319mm)	26" (660mm)	2.9" - 4.5" (74-114mm)
QST Quanta	12" (305mm)	25.3" (642mm)	3.1" - 4.7" (80-120mm)
Samsung IEC / IEC-L	12.3" (313mm)	25.6" (650mm)	3.2" - 4.8" (81-121mm)
SBC CRYSTAL	12.7" (322mm)	26" (660mm)	3.1" - 4.7" (80-120mm)
Sharp/NEC E Series	12.5" (319mm)	25.8" (656mm)	2.7" - 4.3" (69-109mm)
Sharp/NEC FAFE	12.5" (319mm)	26" (660mm)	3.6" - 5.2" (92-132mm)
Sharp/NEC Q	18.7" (474mm)	38.3" (947mm)	4.8" - 6.3" (121-161mm)
Sharp/NEC Qe2	18.7" (474mm)	38.3" (947mm)	4.4"-6" (113-153mm)
Sharp/NEC Qi2	18.7" (474mm)	38.3" (947mm)	1.7"-3.3" (43-83mm)
SNA VST	16.5" (420mm)	34.3" (870mm)	3.5"-5.1" (89-129mm)
SNA VTI	17" (433mm)	34.7" (883mm)	4.3" - 5.8" (108-148mm)
Sony BH/CH (Cancun)	11.8" (299mm)	25.3" (642mm)	4.3" - 5.9" (109-149mm)
Sony Crystal B&C	12.5" (319mm)	25.9" (659mm)	3.5" - 5.1" (89-129mm)
Sony Verona	19.2" (488mm)	38.9" (988mm)	5.2"-6.8" (133-173mm)
Stratech ST150LI-PRO	25.8" (655mm)	52.4" (1330mm)	3.3" - 4.9" (84-124mm)
Unilumin UHWII	12.7" (322mm)	26.2" (666mm)	4.3" - 5.9" (110-150mm)
Unilumin UHWIII	12.6" (320mm)	25.9" (657mm)	3.1" - 4.6" (78-118mm)
Unilumin ULM (Umate)	38.2" (970mm)	77.6" (1970mm)	3.5" - 5.1" (89-129mm)
Unilumin Umini	12.7" (322mm)	26" (660mm)	4.5" - 6.1" (114-154mm)
Unilumin Umini W	12.5" (319mm)	25.8" (655mm)	2.9" - 4.5" (73-113mm)
Unilumin UMINI III (Pro)	12.5" (319mm)	25.8" (655mm)	3.2" - 4.7" (80-120mm)
Unilumin Upanel S	12.7" (322mm)	26.2" (666mm)	4.4" - 5.9" (111-151mm)
Unilumin Upanel II	12.7" (322mm)	26.2" (666mm)	4.3" - 5.8" (109-148mm)
Unilumin Upanel SII	12.7" (322mm)	26.2" (666mm)	4.3" - 5.8" (109-148mm)
Unilumin ULWIII	12.5" (319mm)	25.8" (655mm)	3.4" - 5" (88-128mm)
Unilumin Uslim II (500x1000)	38.6" (980mm)	78" (1980mm)	3.2"-4.8" (82-122mm)
Unilumin Uslim II (500x250)	9.1" (230mm)	18.9" (480mm)	3.2"-4.8" (82-122mm)
Unilumin Uslim II (500x500)	18.9" (480mm)	38.6" (980mm)	3.2"-4.8" (82-122mm)
Uniview UHD	9.1" (230mm)	19.7" (500mm)	3.2" - 4.8" (80-122mm)
Vanguard Axion 300x337.5	12.5" (319mm)	25.8" (655mm)	3.8"-5.4" (97-137mm)
Vanguard Axion 600x337.5	12.5" (319mm)	25.8" (655mm)	3.8" - 5.4" (96-137mm)
Vanguard Invictus 600x337.5	11.3" (288mm)	24.6" (625mm)	2.7" - 4.3" (69-109mm)
Vanguard Zirconium	9.8" (249mm)	3.2" (82mm)	3.2" - 4.8" (80-122mm)
WORTH UHD 600x337.5	12.5" (319mm)	25.8" (655mm)	3.2" - 4.8" (80-122mm)
Yaham YH-T	12" (309mm)	25.3" (643mm)	2.7" - 4.3" (69-109mm)

⚠ WARNING

When installing Peerless wall mounts on a wood stud wall covered with plywood, verify that the wood studs are a minimum of 2" x 4" nominal size and plywood is a minimum Grade BC, 1/2" (13mm) thick. Plywood may be covered by gypsum board (drywall) up to 5/8" thick.

3

Install the bottom row, first extrusion assembly, on the laser line per table (step 2), dimension "A". Install additional bottom row extrusions one at a time using connector plates to join extrusions (step 1). Drill mounting holes and install screws and washers with notch of wall plates on the laser line.

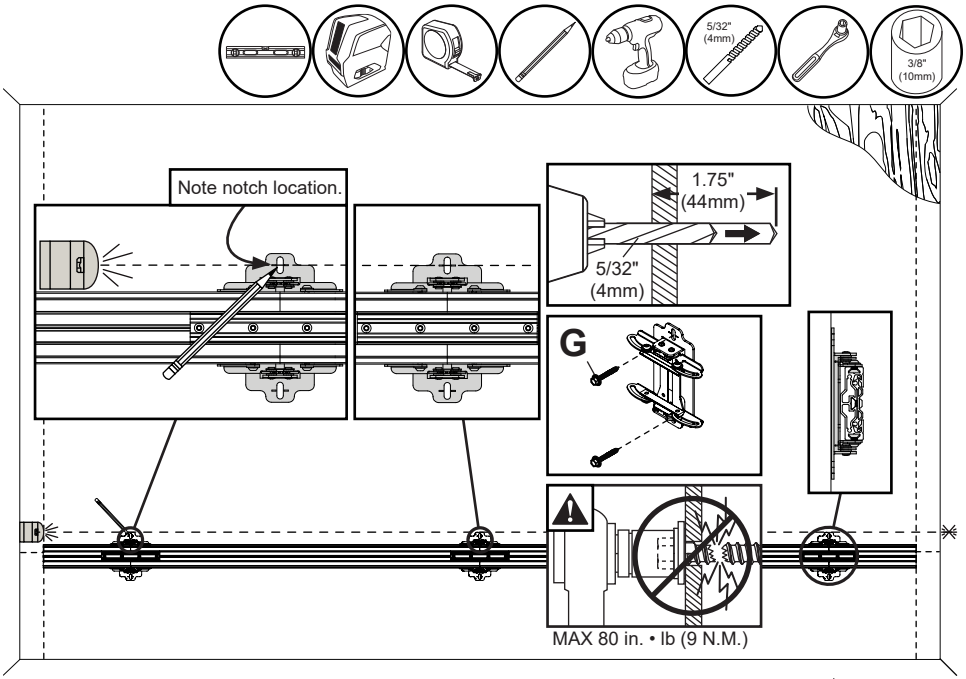

3-1

Determine the combined height of TWO displays being mounted and locate the same dimension on the front of spacer. If height is above 686mm, attach spacer extension. If height is not listed on the spacer, use measurement of the combined height of TWO displays to set custom spacing.

Note, if combined height of TWO displays exceeds 1220mm, set the spacer based on one display as the mount will not skip rows.

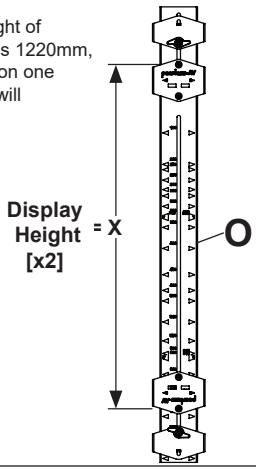

X > 686mm

X ≤ 686mm

X = Not listed

3-2

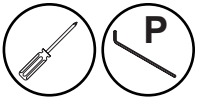

Add the extension when "X" measurement (step 3) is taller than 686mm. Detach lower fixed jaw and clamp bracket from main spacer assembly and reattach to the extension.

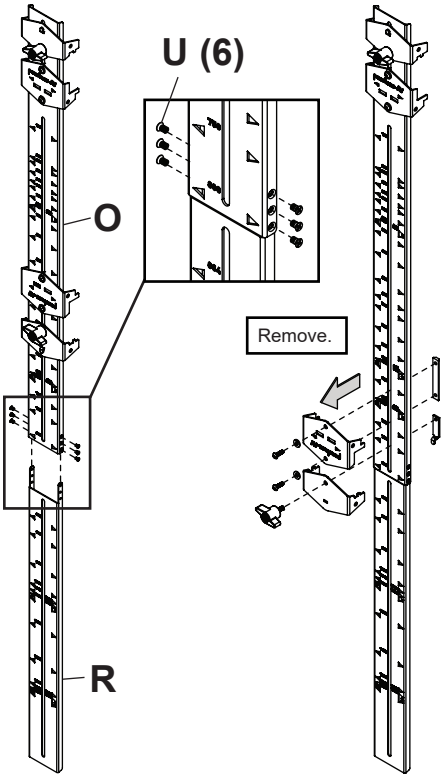

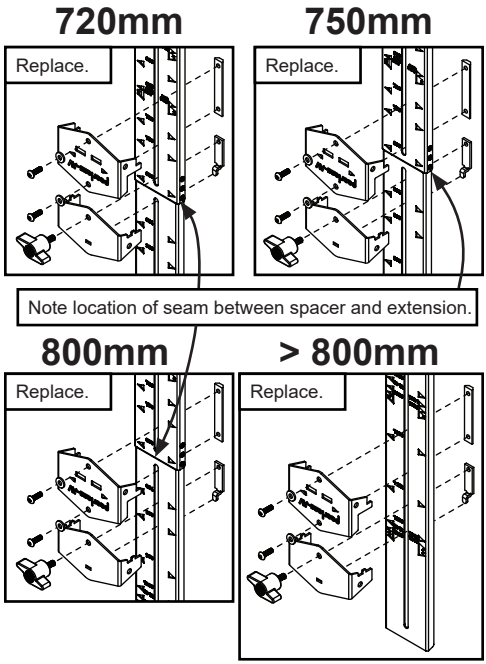

4a

Move spacer bracket and clamp to align window of spacer bracket with corresponding height value (measurement "X", step 3).

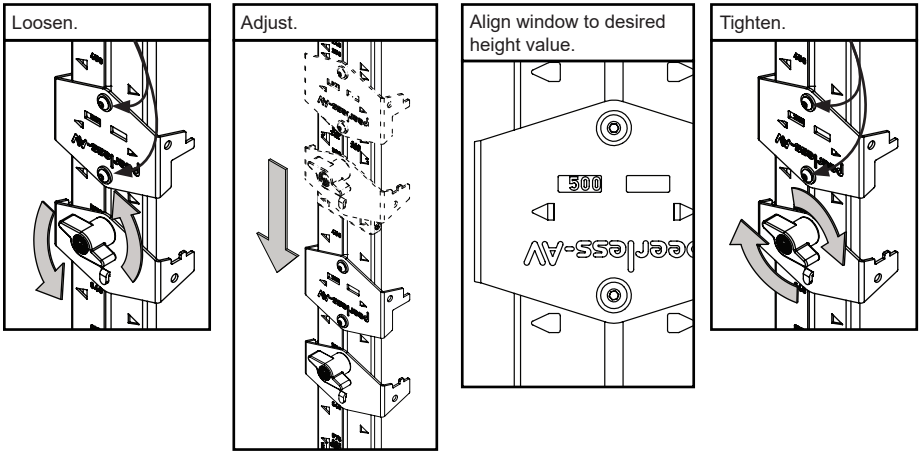

4b-1

If the combined height of TWO displays is not listed on the spacer, measure them to set custom spacing. Remove top spacer clamp. Move upper spacer bracket to the zero position. Loosen lower spacer bracket to insert shim plate underneath to allow spacer bracket to slide freely.

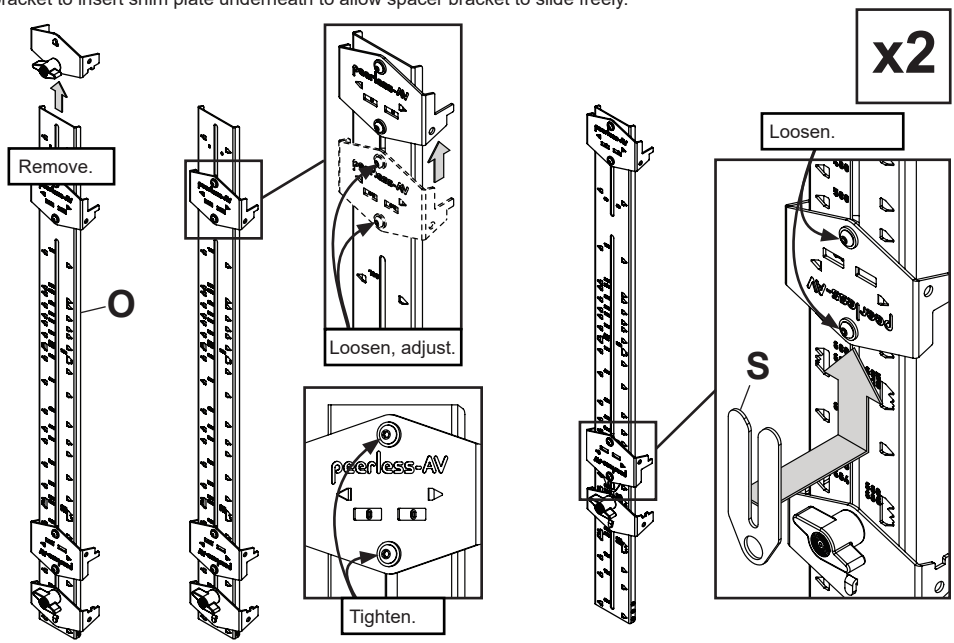

4b-2

With spacer brackets positioned wide enough to fit two displays inside, position notch of top spacer bracket flush with top edge of display. Slide the bottom spacer bracket to the bottom edge of display. Tighten screws of bottom spacer bracket.

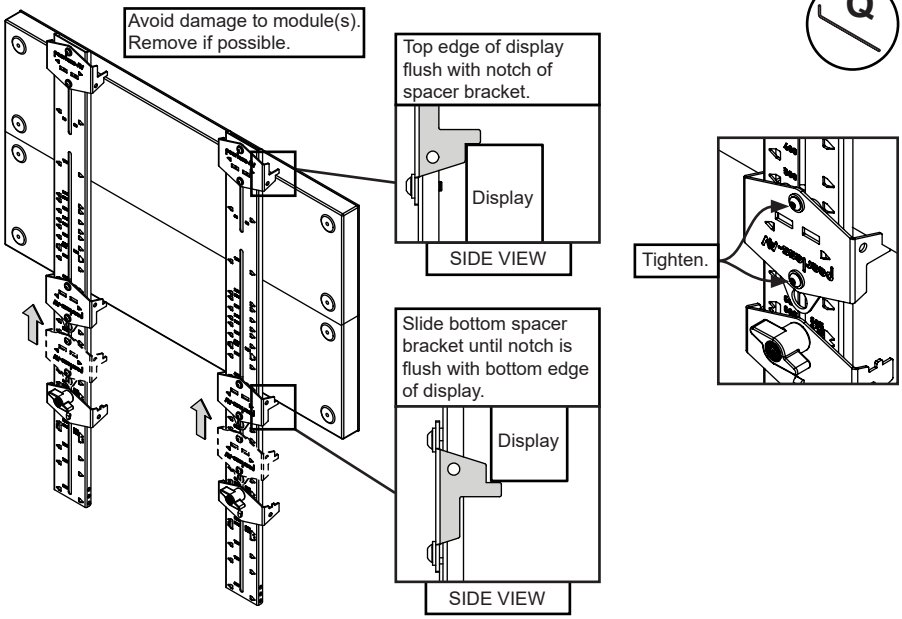

4b-3

Remove display. Return top spacer bracket to the 80mm position. Replace top clamp onto assembly.

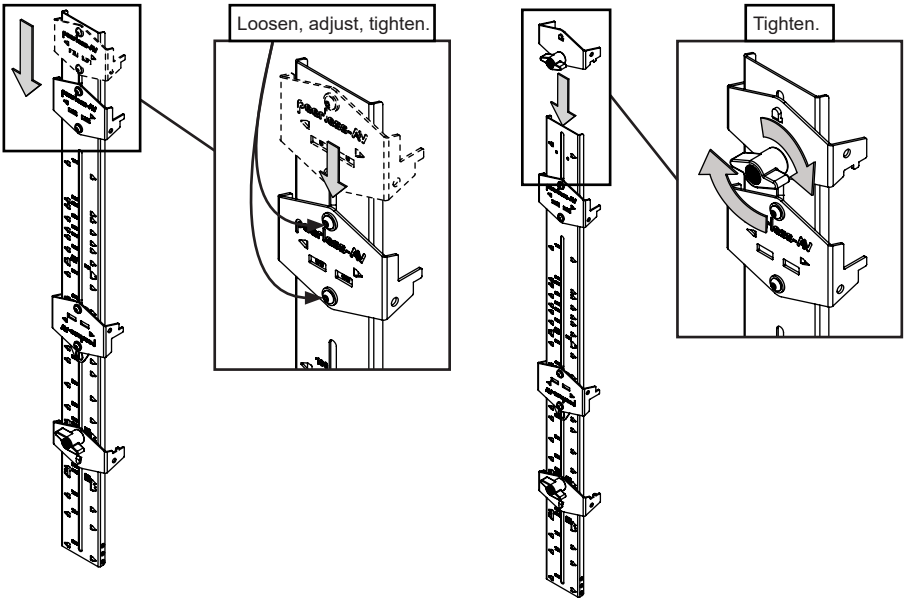

5

Install remaining extrusions using the spacers. Clamp the upper spacer jaw assembly to an uninstalled extrusion assembly. Clamp the bottom spacer jaw assembly to the installed extrusion. Vertically align extrusions with a laser. Drill mounting holes into supporting surface and install wall plates to the wall.

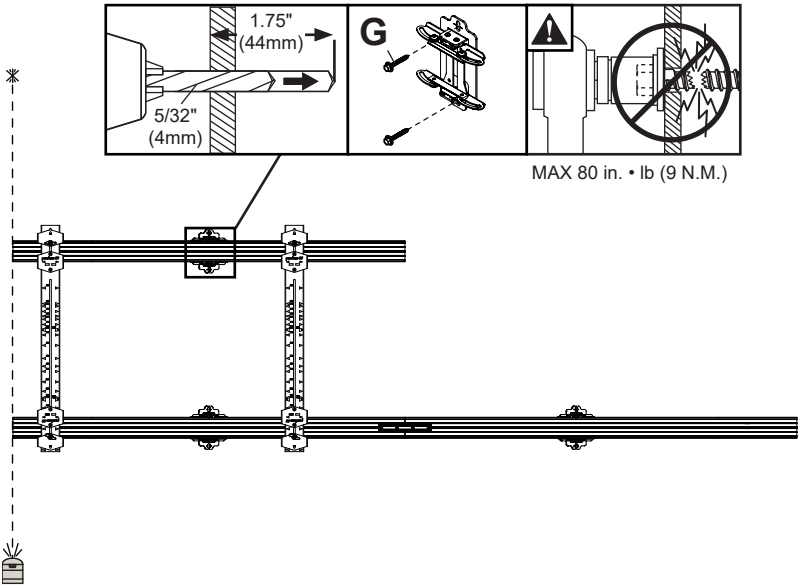

6-1

Loosen clamps and remove spacers. Repeat previous steps to install the next extrusion. Engage and secure connecter plate to mounted extrusions. Secure wall plates to wall. Remove spacer when extrusions are fully secured.

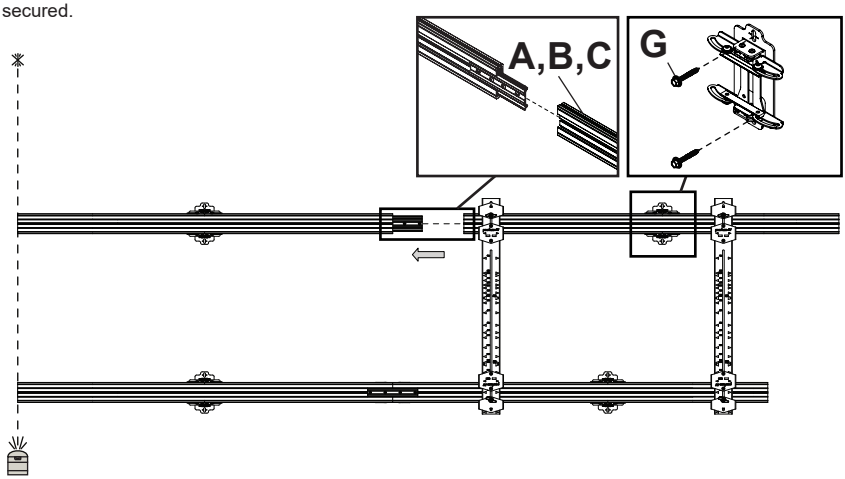

6-2

Once the entire row is installed, compare the length of the extrusion to width of the video wall. If the extrusion is shorter, use the expansion joint to extend the overall length of the extrusion so that it is flush with the video wall. The expansion joint can be extended up to 160mm.

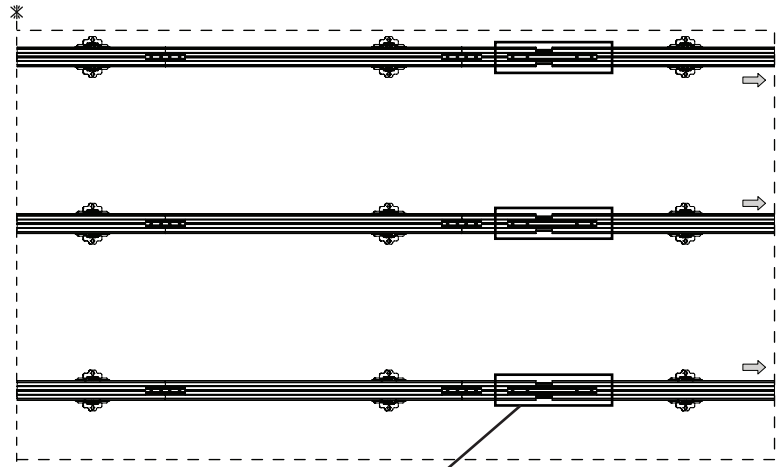

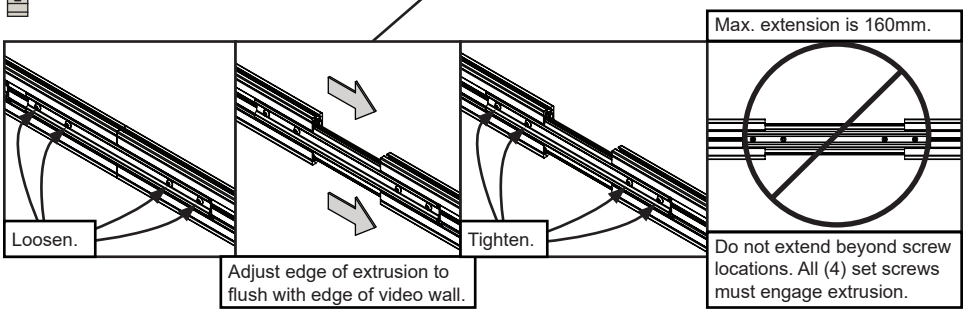

7-1

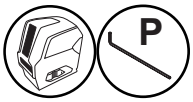

Set the laser level so that it is parallel to the mounting surface (wall). Measure from wall to laser in various locations and find the wall's high point. Mount the laser target at the location that is near the wall's high point and closest wall plate. Adjust the extrusion out slightly from the wall, tighten wall plate screws and mark laser line on the target. Move the target to the remaining wall plates, adjusting depth until the laser is on the line, tightening the screws as you go.

Double check using a straight edge to span three extrusions. Adjust low and high spots as needed.

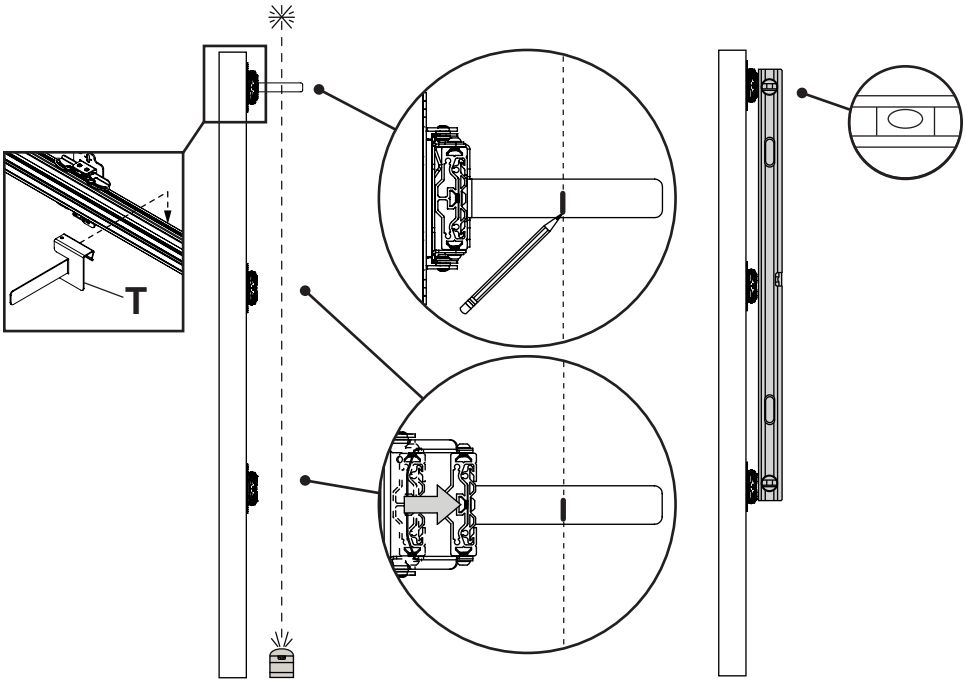

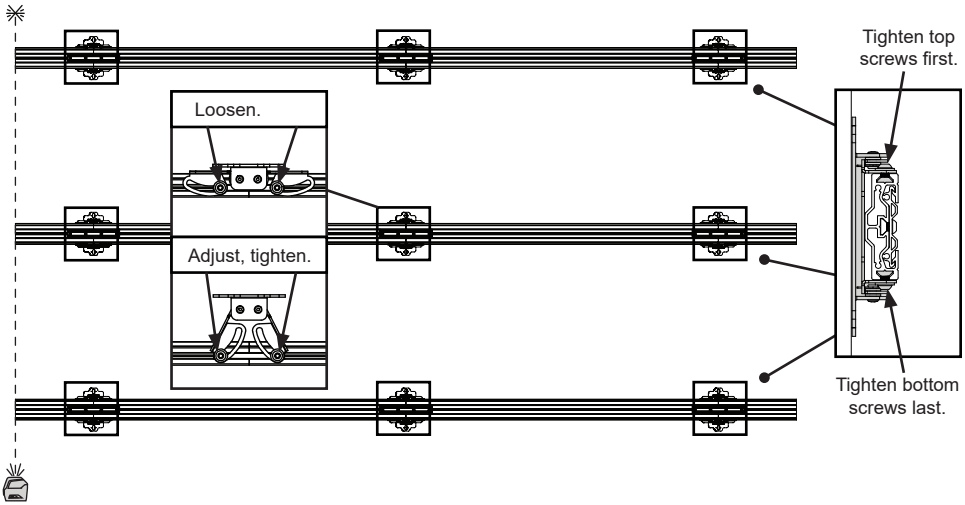

7-2

Attach end caps.

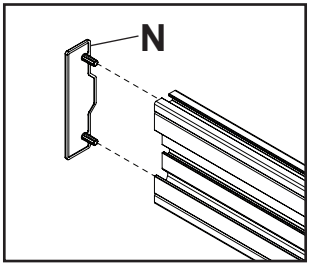

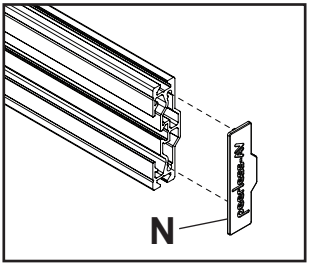

8a

ODD
Number of Rows

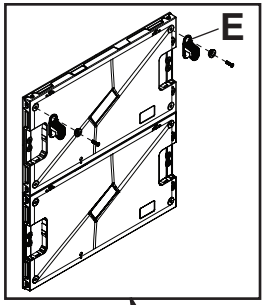

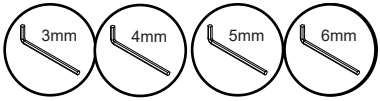

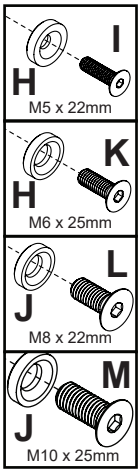

If mounting hardware is preinstalled, remove and replace with hardware provided.

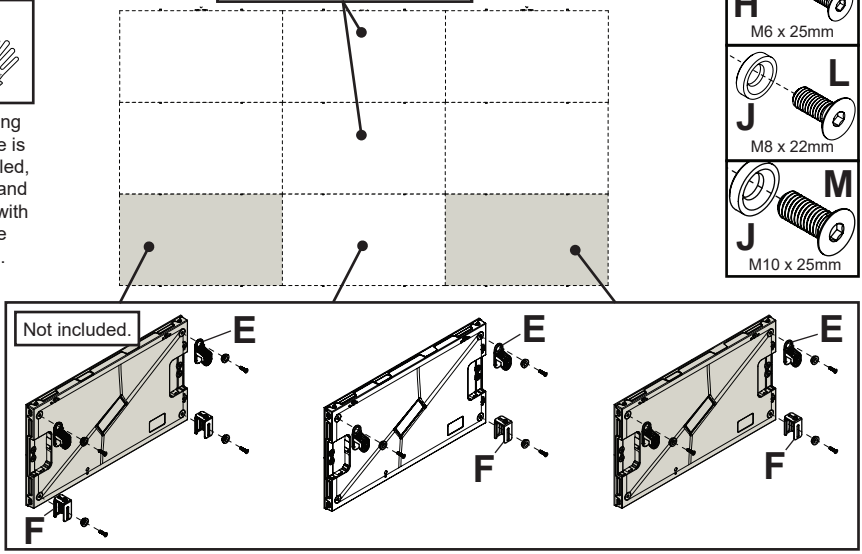

8b

EVEN
Number of Rows

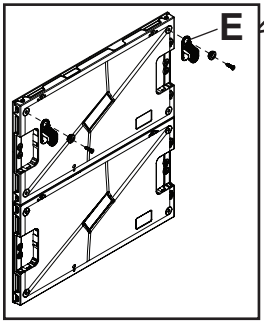

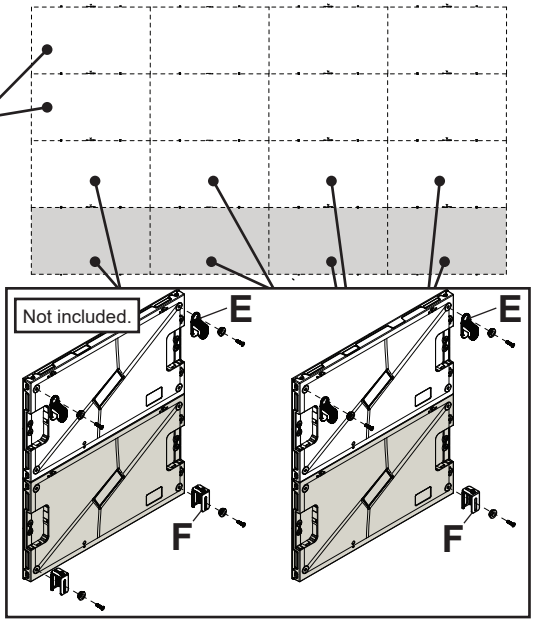

Join two cabinets together vertically using connecting system. Two displays attached together are then mounted onto extrusion as one.

9-1

Hook display cabinets onto horizontal extrusion, adjust height to level and join cabinets together using display's connecting system. Adjust plumb with depth adjustment bracket, close latch, then run cables one at a time starting from left to right.

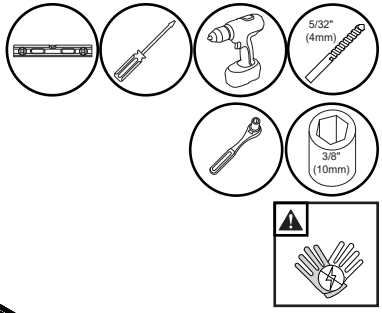

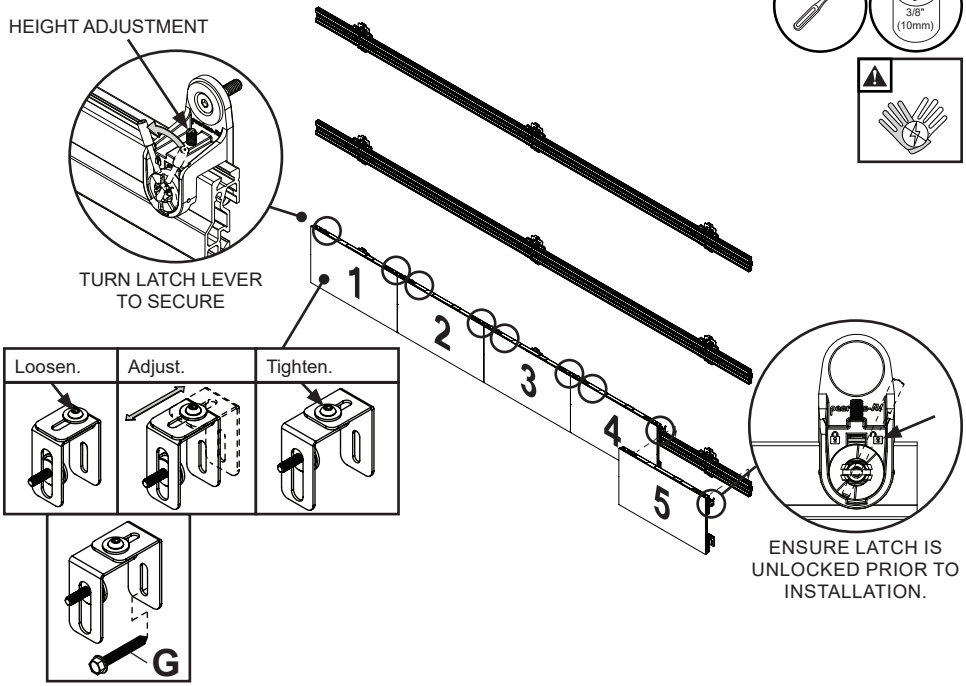

OPTIONAL: Depth adjustment bracket can be disassembled and 'L' bracket rotated as shown to achieve additional depth.

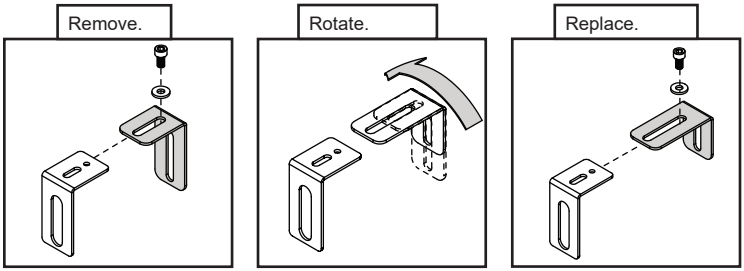

9-2

Hook display cabinets onto horizontal extrusion, adjust height to level and join cabinets together using connecting system. Close latch, then run cables one at a time starting from left to right.

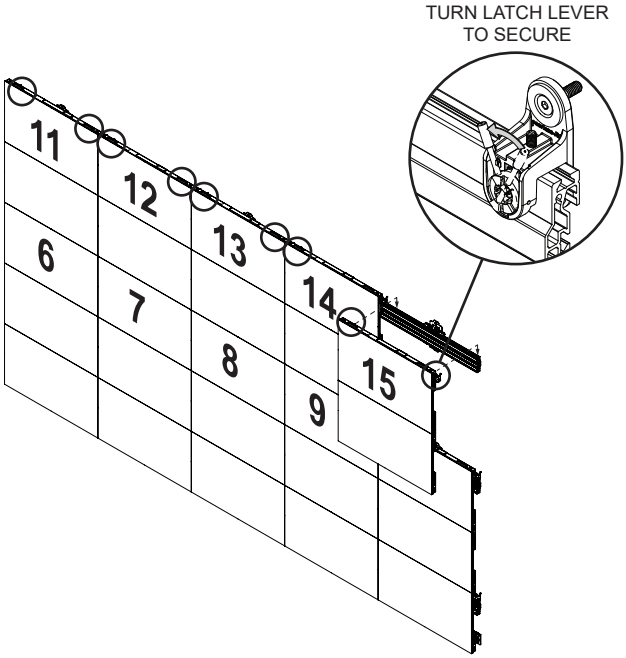

9-3

To remove, start from the top right. Open latch assemblies, disconnect cables, separate cabinets and remove displays one set at a time.

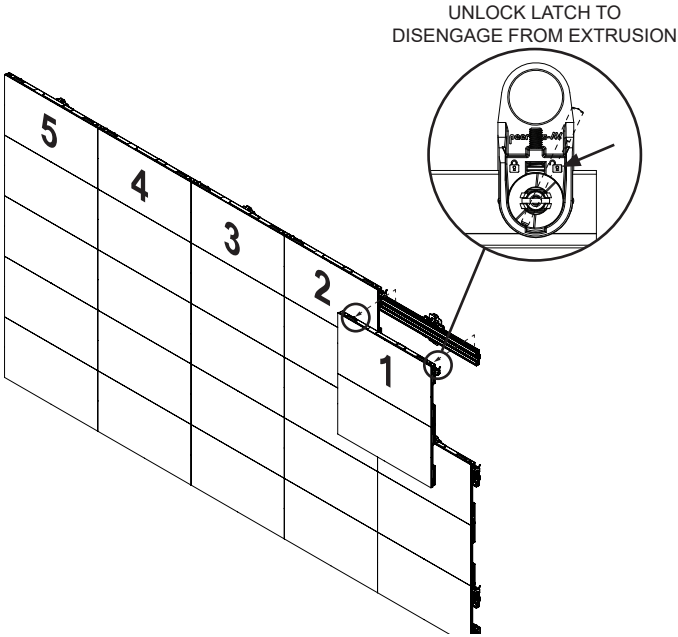

ENG	Warranty	ESP	Garantía	FRN	Garantie	DEU	Garantie	NEL	Garantie
ITL	Garanzia	ČEŠ	Záruka	SLK	Záruka	POR	Garantia	TÜR	Garanti

www.peerless-av.com/warranty • www.peerless-av.com • www.peerless-av.com/patents

Peerless-AV
2300 White Oak Circle
Aurora, IL 60502, USA
info@peerless-av.com

(800) 865-2112
(630) 375-5100

Peerless-AV EMEA
Unit 2, Curo Park
Frogmore, St. Albans,
Hertfordshire, AL2 2DD
United Kingdom

+44 (0) 1923 200 100

Peerless-AV B.V.
Papendorpseweg 75
3528 BJ Utrecht
The Netherlands

+31 (0) 70 770 8037

Peerless-AV Latin America
Av. de las Industrias 413
Parque Industrial Escobedo
General Escobedo N.L.,
México 66062

+52 (81) 8384-8300

© 2025 Peerless Industries, Inc. Peerless-AV® is a registered trademark of Peerless Industries, Inc. All rights reserved.
Other parties' marks are the property of their respective owners.