HIKVISION

DS-2DE7A432IW-AEB: Network Speed Dome Camera

General Information/Key Features

- Product Line: AcuSense
- Facial Recognition
- Digital Noise Reduction
- Motion Detection Tracking
- Wide Dynamic Range
- Automatic White Balance

Related Pages (Right click to open in new tab)

Shop Now. Visit the DS-2DE7A432IW-AEB product page for detailed information

View other Hikvision IP Speed Dome Cameras
View over 1300 video surveillance products from Hikvision

Scroll down to view the Hikvision DS-2DE7A432IW-AEB specification sheet

HIKVISION
DS-2DE7A432IW-AEB

https://www.surveillance-video.com is a distributor/reseller of over 120,000 security products from over 100 brands.

For over 45 years, we have earned the confidence of our customers by providing professional service and support.

If you need technical support or assistance to install your security system or any other products purchased from Surveillance-video.com, you can call us @ **800-955-5201** at any time.

DS-2DE7A432IW-AEB

4 MP 32× IR Network Speed Dome

- 1/1.8" Progressive Scan CMOS
- High Quality Imaging with 4 MP Resolution
- Excellent Low-Light Performance with Powered-by-DarkFighter Technology
- Audio Visual Alarm: Event Triggered White Flashing Light and Audible Warning
- 32x Optical Zoom, 16x Digital Zoom Provide Close Up Views Over Expansive Areas
- Expansive Night View with up to 660 ft (200 m) IR Distance
- Human and Vehicle Targets Classification Based on Deep Learning
- Up to Five Faces Captured at Same Time

Hikvision's DS-2DE7A432IW-AEB 4 MP 32x IR Network Speed Dome adopts a 1/1.8" progressive scan CMOS chip. With the 32x optical zoom lens, the camera offers more details over expansive areas.

This series of cameras can be widely used for wide ranges of high-definition, such as the rivers, roads, railways, airports, squares, parks, scenic spots, venues, etc.

Empowered by deep learning algorithms, Hikvision AcuSense technology brings human and vehicle targets classification alarms to front- and back-end devices. The system focuses on human and vehicle targets, vastly improving alarm efficiency and effectiveness.

Available Model

DS-2DE7A432IW-AEB

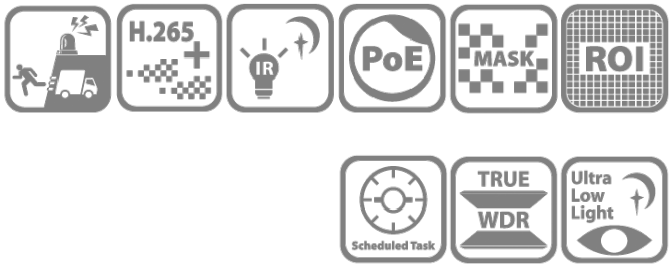

DORI

The DORI (detect, observe, recognize, identify) distance gives the general idea of the camera ability to distinguish persons orobjects within its field of view. It is calculated based on the camera sensor specification and the criteria given by EN 62676-4:2015.

DORI	Detect	Observe	Recognize	Identify
Definition	25 px/m	63 px/m	125 px/m	250 px/m
Distance (Tele)	2046.9 m (6715.5 ft)	812.3 m (2665.0 ft)	409.4 m (1343.2 ft)	204.7 m (671.6 ft)

Specifications

	DS-2DE7A432IW-AEB
Camera	
Maximum Resolution	2560 × 1440
Image Sensor	1/1.8" progressive scan CMOS
Minimum Illumination	Color: 0.005 lux @ (*f*/1.5, AGC on), B/W: 0.001 lux @ (*f*/1.5, AGC on), 0 lux with IR
Shutter Speed	1/1 s to 1/30000 s
Slow Shutter	Yes
Day/Night	IR cut filter
Zoom	32x optical, 16x digital
Lens	
Focal Length	5.9 mm to 188.8 mm
Zoom Speed	Approximately 4.8 s
FOV	Horizontal field of view: 50.8° to 2.6° (wide-tele), vertical field of view: 29.4° to 1.5° (wide-tele), diagonal field of view: 57.4° to 3° (wide–tele)
Aperture	Maximum *f*/1.5
Focus	Auto, semi-auto, manual, rapid focus
Illuminator	
Supplement Light Type	IR
Supplement Light Range	IR Distance: up to 660 ft (200 m)
PTZ	
Movement Range (Pan)	360°
Movement Range (Tilt)	-15° to 90° (auto flip)
Pan Speed	Pan speed: configurable from 0.1° to 160°/s; preset speed: 240°/s
Tilt Speed	Tilt speed: configurable from 0.1° to 120°/s, preset speed 200°/s
Proportional Pan	Yes
Presets	300
Patrol Scan	8 patrols, up to 32 presets for each patrol
Pattern Scan	4 pattern scans
Power-off Memory	Yes
Park Action	Preset, pattern scan, auto scan, tilt scan, random scan, frame scan, panorama scan
3D Positioning	Yes
PTZ Status Display	Yes
Preset Freezing	Yes
Scheduled Task	Preset, pattern scan, patrol scan, auto scan, tilt scan, random scan, frame scan, panorama scan, dome reboot, dome adjust, aux output
Video	
Main Stream	50 Hz: 25 fps (2560 × 1440, 1920 × 1080, 1280 × 960, 1280 × 720) 60 Hz: 30 fps (2560 × 1440, 1920 × 1080, 1280 × 960, 1280 × 720)
Sub-Stream	50 Hz: 25 fps (704 × 576, 640 × 480, 352 × 288) 60 Hz: 30 fps (704 × 480, 640 × 480, 352 × 240)
Third Stream	50 Hz: 25 fps (1920 × 1080, 1280 × 960, 1280 × 720, 704 × 576, 640 × 480, 352 × 288) 60 Hz: 30 fps (1920 × 1080, 1280 × 960, 1280 × 720, 704 × 480, 640 × 480, 352 × 240)
Video Compression	Main stream: H.265+/H.265/H.264+/H.264 Sub-stream: H.265/H.264/MJPEG Third stream: H.265/H.264/MJPEG
Video Bit Rate	32 kbps to 16384 kbps
H.264 Type	Baseline Profile/Main Profile/High Profile
H.265 Type	Main Profile
Scalable Video Coding (SVC)	H.264 and H.265 encoding
Region of Interest (ROI)	8 fixed regions for each stream
Audio	
Audio Compression	G.711alaw, G.711ulaw, G.722.1, G.726, MP2L2, AAC, PCM
Audio Bit Rate	64 Kbps (G.711)/16 Kbps (G.722.1)/16 Kbps (G.726)/32-192 Kbps (MP2L2)/16-64 Kbps (AAC)
Audio Sampling Rate	8 kHz/16 kHz/32 kHz/48 kHz
Environment Noise Filtering	Yes

© 2021 Hikvision USA Inc. • All Rights Reserved • Specifications subject to change without notice.
Hikvision USA Inc., 18639 Railroad Street, City of Industry, CA 91748, USA • Hikvision Canada, 4848 rue Levy, St-Laurent, Quebec, Canada, H4R 2P1
Tel: +1-909-895-0400 • Toll Free in USA: +1-866-200-6690 • E-Mail: sales.usa@hikvision.com • www.hikvision.com

Specifications (continued)

DS-2DE7A432IW-AEB	
Network	
Network Storage	NAS (NFS, SMB/CIFS), auto network replenishment (ANR)
Protocols	IPv4/IPv6, HTTP, HTTPS, 802.1x, QoS, FTP, SMTP, UPnP, SNMP, DNS, DDNS, NTP, RTSP, RTCP, RTP, TCP/IP, UDP, IGMP, ICMP, DHCP, PPPoE, Bonjour
API	Open Network Video Interface (Version 19.12, Profile S, Profile G, Profile T), ISAPI, SDK, ISUP
Network (continued)	
Simultaneous Live View	Up to 20 channels
User/Host	Up to 32 users, 3 user levels: administrator, operator, and user
Security	Password protection, complicated password, HTTPS encryption, 802.1x authentication (EAP-TLS, EAP-LEAP, EAP-MD5), watermark, IP address filter, basic and digest authentication for HTTP/HTTPS, RTP/RTSP over HTTPS, control timeout settings, security audit log, TLS 1.2, TLS 1.3, host authentication (MAC address)
Client	iVMS-4200, HikCentral Pro, Hik-Connect
Web Browser	IE11, Chrome 57+, Firefox 52+, Safari 11+
Image	
Day/Night Switch	Day, Night, Auto, Schedule
Image Enhancement	BLC, HLC, 3D DNR
Wide Dynamic Range (WDR)	120 dB
Defog	Digital defog
Image Stabilization	EIS
Regional Exposure	Yes
Regional Focus	Yes
Image Settings	Saturation, brightness, contrast, sharpness, gain, and white balance adjustable by client software or Web browser
Privacy Mask	24 programmable polygon privacy masks, mask color, or mosaic configurable
SNR	>52 dB
Interface	
Ethernet Interface	1 RJ-45 10M/100M self-adaptive Ethernet port
On-Board Storage	Built-in memory card slot, supports microSD/SDHC/SDXC card, up to 256 GB
Alarm	2 inputs, 1 output
Audio	1 input (line in), maximum input amplitude: 2-2.4 vpp, input impedance: 1k Ω ±10% 1 output (line out), line level, output impedance: 600 Ω
Reset	Yes
Built-in Speaker	1 built-in speaker with effective distance reaching maximum 98 ft (30 m)
Event	
Basic Event	Motion detection, video tampering alarm, exception, alarm input and output
Smart Event	Line crossing detection, intrusion detection, region entrance detection, region exiting detection, unattended baggage detection, object removal detection, audio exception detection
Smart Tracking	Manual tracking, auto-tracking
Alarm Linkage	Upload to FTP/NAS/memory card, notify surveillance center, send e-mail, trigger alarm output, trigger recording, audible warning, white light flashing, and PTZ actions (such as preset, patrol scan, pattern scan)
Deep Learning Functions	
Face Capture	Detects up to 5 faces simultaneously; supports detecting, capturing, grading, selecting of face in motion, and output the best face picture of the face
Perimeter Protection	Line crossing, intrusion, region entrance, region exiting; supports alarm triggering by specified target types (human and vehicle)
General	
Power	24 VAC, maximum 42 W (including maximum 18 W for IR and maximum 10 W for heater); Hi-PoE
Operating Condition	-30° to 65° C (-22° to 149° F), humidity 90% or less (non-condensing)
De-Mist	Yes
Material	ADC12
Dimension	Ø220 mm × 363.3 mm (Ø8.66" × 13.91")
Weight	Approximately 5 kg (11.03 lb)
Approvals	
Protection	IP66 (IEC 60529-2013), IK10 (excluding glass window), TVS 6000V lightning protection, surge protection and voltage transient protection
EMC	FCC SDoC (47 CFR Part 15, Subpart B); CE-EMC (EN 55032: 2015, EN 61000-3-2: 2019, EN 61000-3-3: 2013, EN 50130-4: 2011 +A1: 2014); RCM (AS/NZS CISPR 32: 2015); IC VoC (ICES-003: Issue 6, 2019); KC (KN 32: 2015, KN 35: 2015)
Safety	UL (UL 62368-1); CB (IEC 60950-1:2005 + Am 1:2009 + Am 2:2013, IEC 62368-1:2014);CE-LVD (EN 62368-1:2014+A11:2017); BIS (IS 13252(Part 1):2010+A1:2013+A2:2015); LOA (SANS IEC60950-1)
Environment	CE-RoHS (2011/65/EU); WEEE (2012/19/EU); Reach (Regulation (EC) No 1907/2006)

© 2021 Hikvision USA Inc. • All Rights Reserved • Specifications subject to change without notice.
Hikvision USA Inc., 18639 Railroad Street, City of Industry, CA 91748, USA • Hikvision Canada, 4848 rue Levy, St-Laurent, Quebec, Canada, H4R 2P1
Tel: +1-909-895-0400 • Toll Free in USA: +1-866-200-6690 • E-Mail: sales.usa@hikvision.com • www.hikvision.com

Dimensions

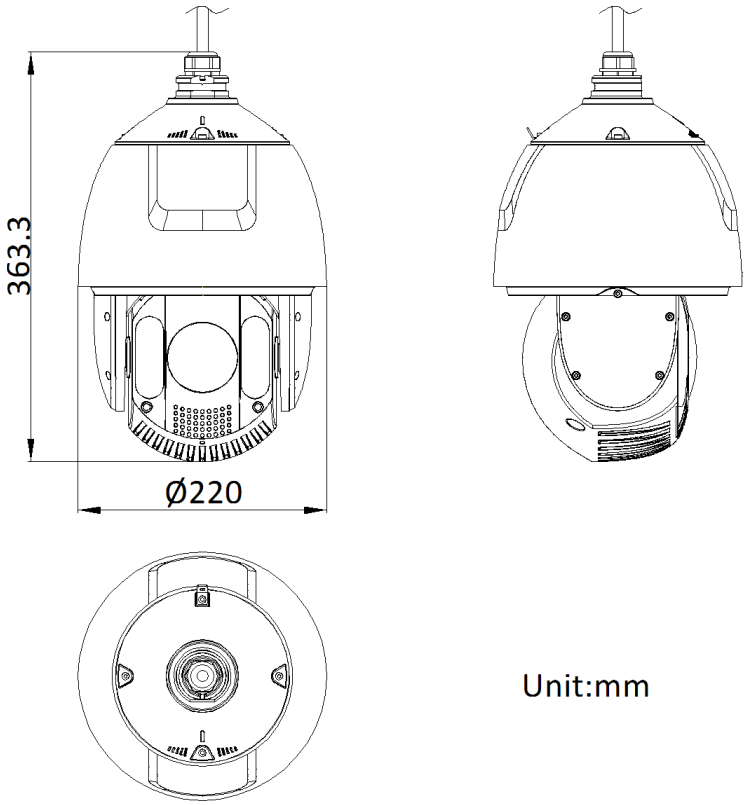

Accessories

NOT INCLUDED				
WMP-L Wall Mount	**JBPW-L** Wall Mount with Junction Box	**PMP-JB** Pole Mount	**CMP-JB** Corner Mount	**CPM-S** Ceiling Pendent Mount

CPM-L Ceiling Pendent Mount	**CPMPE** Ceiling Pendent Mount Extension Pipe	**PMP-V** Horizontal Pole Mount	**RPM** Roof Parapet Mount	**SNB-PV** Swan Neck Mount

MKAC-66-243000U Power Adapter	**LAS60-57CN-RJ45** Hi-PoE Midspan

© 2021 Hikvision USA Inc. • All Rights Reserved • Specifications subject to change without notice.
Hikvision USA Inc., 18639 Railroad Street, City of Industry, CA 91748, USA • Hikvision Canada, 4848 rue Levy, St-Laurent, Quebec, Canada, H4R 2P1
Tel: +1-909-895-0400 • Toll Free in USA: +1-866-200-6690 • E-Mail: sales.usa@hikvision.com • www.hikvision.com

HIKVISION

092121NA