HIKVISION

DS-9016HUI-K8-48TB: Digital Video Recorder

General Information/Key Features

- PTZ Support
- Dual Streaming
- Email Notifications
- Multi-Zone Video Motion Detection
- Bi-Directional Audio Communication

Related Pages (Right click to open in new tab)

Shop Now. Visit the DS-9016HUI-K8-48TB product page for detailed information

View other Hikvision Digital Video Recorders
View over 1300 video surveillance products from Hikvision

Scroll down to view the Hikvision DS-9016HUI-K8-48TB specification sheet

HIKVISION
DS-9016HUI-K8-48TB

https://www.surveillance-video.com is a distributor/reseller of over 120,000 security products from over 100 brands.

For over 45 years, we have earned the confidence of our customers by providing professional service and support.

If you need technical support or assistance to install your security system or any other products purchased from Surveillance-video.com, you can call us @ **800-955-5201** at any time.

DS-90xxHUI-K8 SERIES

TurboHD DVR

- **H.265+/H.265/H.264+/H.264 Main Stream Encoding**
- **Hot-Swappable HDD Support for RAID 0, RAID 1, RAID 5, RAID 6, and RAID 10**
- **Full Channel Recording at up to 5 MP**
- **HDMI1 and VGA Output up to 1920 x 1080**
- **HDMI2 Output up to 4K (3840 x 2160)**
- **Long Over-the-Coax Transmission Distance**
- **8/16-ch Synchronous Playback**

TurboHD DS-90xxHUI-K8 Series DVRs feature support of HD-TVI, CVBS and IP cameras on up to 16 channels. They offer long transmission distances and feature new important H.265+ compression technology, which improves recording efficiency and reduces data storage costs.

Additionally, the DS-90xxHUI-K8 Series DVRs support advanced analytics such as line crossing, intrusion, scene change detection, people counting, heat map functionality, and Video Quality Diagnostics (VQD).

Available models: DS-9008HUI-K8, DS-9016HUI-K8

Specifications

	DS-9008HUI-K8	DS-9016HUI-K8
Video / Audio Input		
Video Compression	H.265+ / H.265 / H.264+ / H.264	
Analog Video Input	8-ch	16-ch
	BNC interface (1.0 Vp-p, 75 Ω), supporting coaxitron connection	
HDTVI Input	5 MP, 4 MP, 3 MP, 1080p25, 1080p30, 720p25, 720p30, 720p50, 720p60	
CVBS Input	Supported	
IP Video Input	10-ch (up to 18-ch)	18-ch (up to 32-ch)
	Up to 12 MP resolution	
	Supports H.265+ / H.265 / H.264+ / H.264 IP cameras	
Network Bandwidth	260 Mbps	320 Mbps
Audio Compression	G.711u	
Audio Input	8-ch	16-ch
	RCA (2.0 Vp-p, 1 KΩ)	
Video / Audio Output		
CVBS output	1-ch, BNC (1.0 Vp-p, 75 Ω), resolution: PAL: 704 × 576, NTSC: 704 × 480	
HDMI1 / VGA	1-ch, 1920 × 1080 / 60 Hz, 1280 × 1024 / 60 Hz, 1280 × 720 / 60 Hz, 1024 × 768 / 60 Hz	
HDMI2 Output	1-ch, 4K (3840 × 2160) / 30 Hz, 2K (2560 × 1440) / 60 Hz, 1920 × 1080 / 60 Hz, 1280 × 1024 / 60 Hz, 1280 × 720 / 60 Hz, 1024 × 768 / 60 Hz	
Video Loop	Supported	
Encoding Resolution	5 MP / 4 MP / 3 MP / 1080p / 720p / WD1 / 4CIF / VGA / CIF	
Frame Rate	Main stream: 5 MP @ 12 fps; 4 MP @ 15 fps; 3 MP @ 18 fps; 1080p / 720p / WD1 / 4CIF / VGA / CIF @ 25 fps (P) / 30 fps (N)	
	Sub-stream: WD1 / 4CIF / CIF @ 25 fps (P) / 30 fps (N)	
Video Bit Rate	32 Kbps to 6 Mbps	
Audio Output	2-ch, RCA (Linear, 1 KΩ)	
Audio Bit Rate	64 Kbps	
Dual Stream	Supported	
Stream Type	Video, Video and Audio	
Synchronous Playback	8-ch	16-ch
Network Management		
Remote Connections	128	
Network Protocols	TCP / IP, PPPoE, DHCP, Hik-Connect, DNS, DDNS, NTP, SADP, NFS, iSCSI, UPnP™, HTTPS, ONVIF, SNMP	
Hard Disk		
SATA	8 SATA interfaces	
eSATA	Supported	
Capacity	Up to 8 TB capacity for each disk	
External Interface		
Two-way audio input	1-ch, RCA (2.0 Vp-p, 1 KΩ) (independent)	
Network Interface	2, RJ45 10M/100M/1000M self-adaptive Ethernet interface	
USB Interface	Front panel: 2 × USB 2.0; rear panel: 1 × USB 3.0	
Serial Interface	RS-232, RS-485 (full-duplex), Keyboard	
Alarm In / Out	16/8	
General		
Power Supply	100 to 240 VAC	
Consumption (without HDD)	≤ 45 W	≤ 65 W
Working Temperature	14° F to 131° F (-10° C to 55° C)	
Working Humidity	10 to 90 %	
Dimensions (W x D x H)	17.5" x 18.5" x 3.5" (445 mm x 470 mm x 90 mm)	
Weight (without HDD)	≤ 17.6 lb (8 kg)	

Physical Interfaces

DS-9016HUI-K8

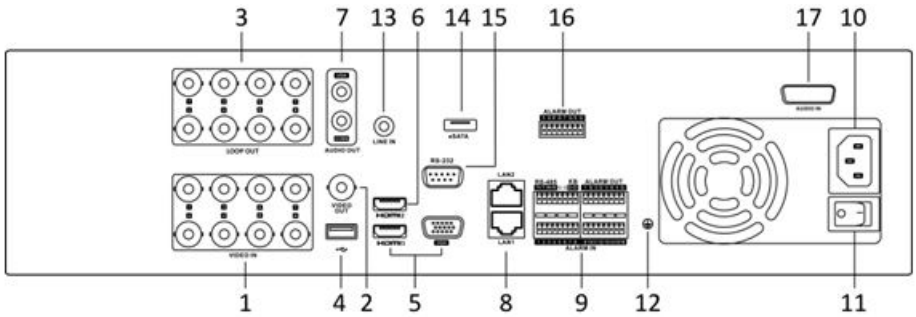

Note: The DS-9016HUI-K8 rear panel provides 16 video input interfaces

1.	Video In	10.	100 to 240 VAC
2.	Video Out	11.	Power Switch
3.	Loop Out	12.	GND
4.	USB Interface	13.	Line In
5.	HDMI1/VGA Interface	14.	eSATA Interface
6.	HDMI2 Interface	15.	RS-232 Serial Interface
7.	CVBS Audio Out and VGA Audio Out	16.	Alarm Out
8.	LAN1 and LAN2 Network Interface	17.	Audio In
9.	RS-485 Serial Interface, Keyboard Interface, Alarm In and Alarm Out		

© 2017 Hikvision USA Inc. • All Rights Reserved • Specifications subject to change without notice.
Hikvision USA Inc., 18639 Railroad Street, City of Industry, CA 91748, USA • Hikvision Canada, 4848 rue Levy, St-Laurent, Quebec, Canada, H4R 2P1
Tel: +1-909-895-0400 • Toll Free in USA: +1-866-200-6690 • E-Mail: sales.usa@hikvision.com • www.hikvision.com
Rev. 122217NA