ILC Installation Instructions

ILC (In-Line Connector)

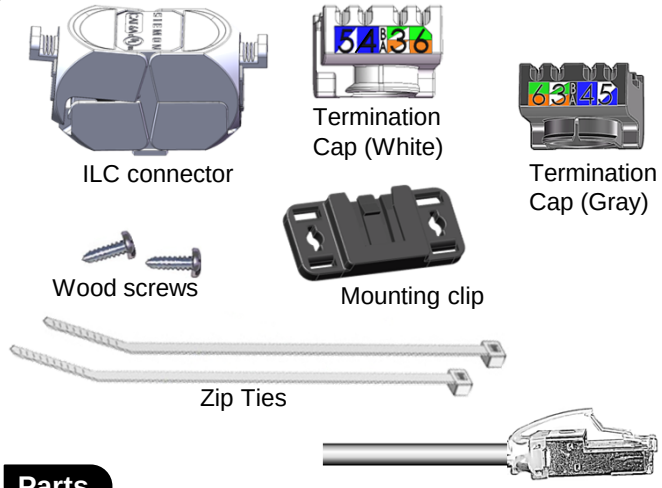

Parts

ILC (6pc kit, no cords):
p/n: ILC-S6AS

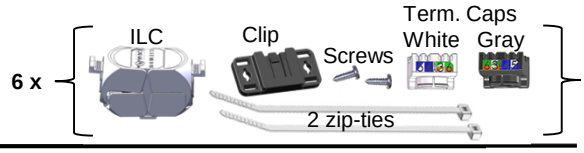

ILC (2pc kit with terminated 0.5m/1.6ft cord):
p/n: ILC-T(X)-(XXXXXX)

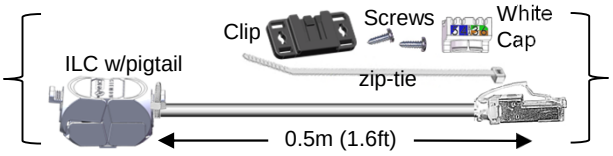

ILC (6pc kit with unterminated 3m/10ft 1-sided cords):
p/n: ILC-K(X)-(XXXXXX)

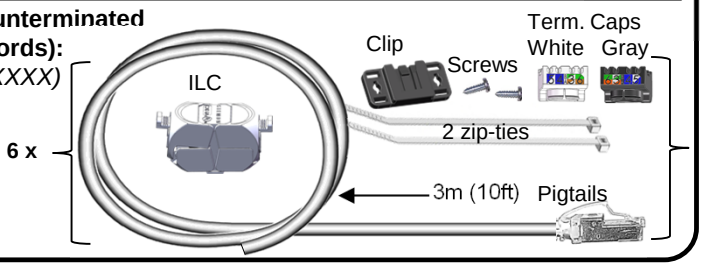

Kits

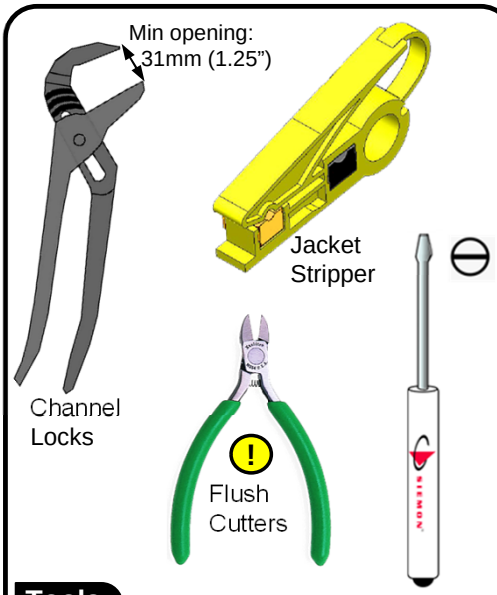

Tools

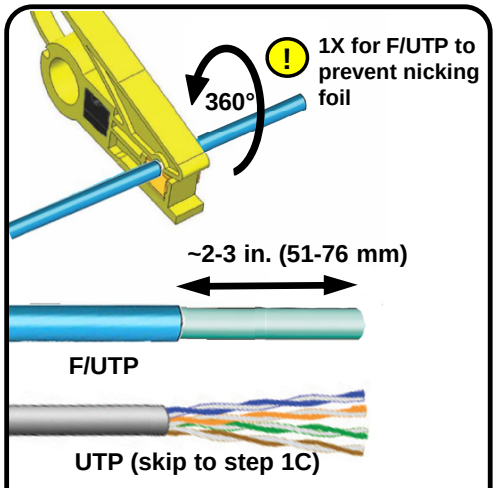

1a

***See back page for other cable construction types.**

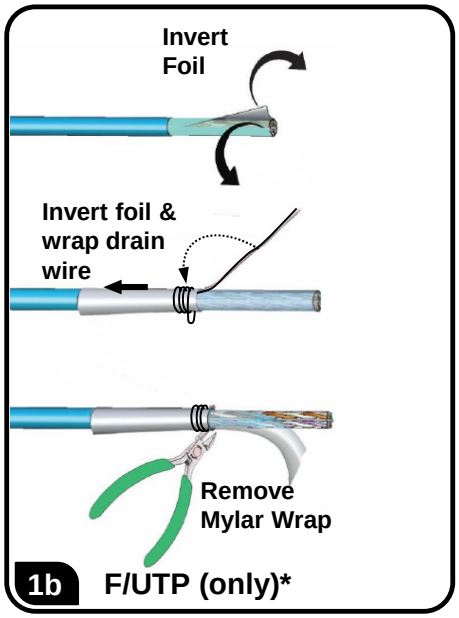

1b **F/UTP (only)***

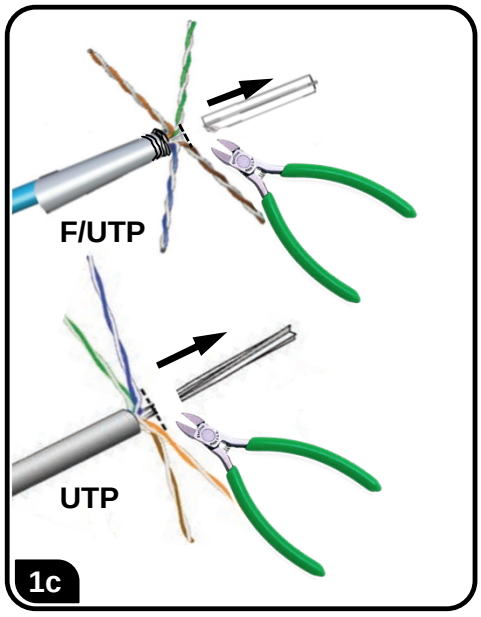

1c

ILC Installation Instructions

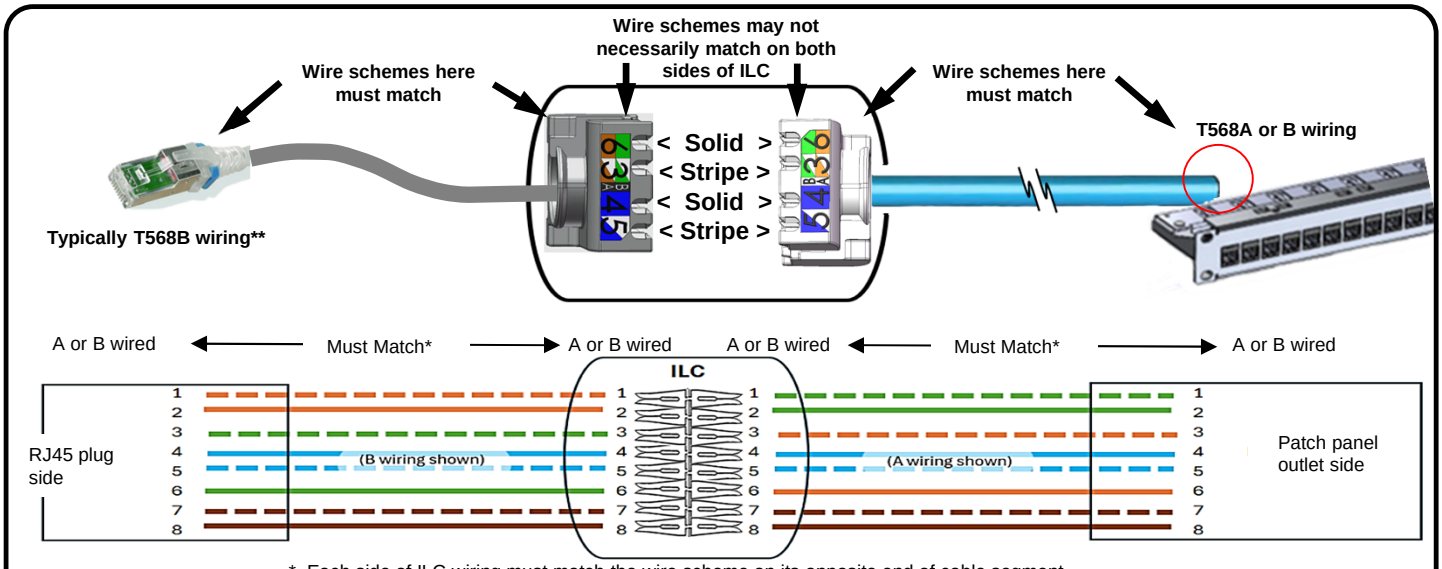

* Each side of ILC wiring must match the wire scheme on its opposite end of cable segment
** See back page for T568A vs T568 comparison

2 Wire Scheme Wire Mapping

Gauge Compatibility: 23 – 28 AWG
Max recommended cable Diameter = 9mm (0.35")

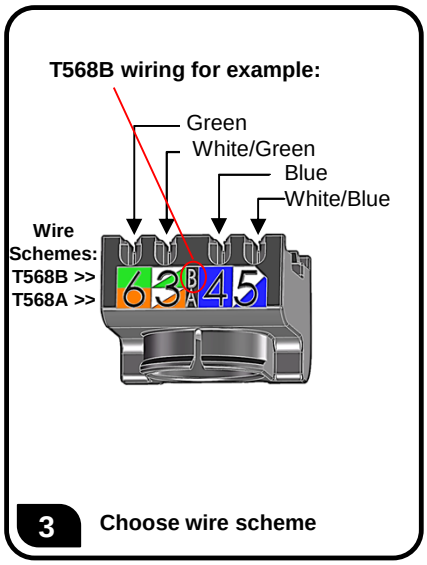

3 Choose wire scheme

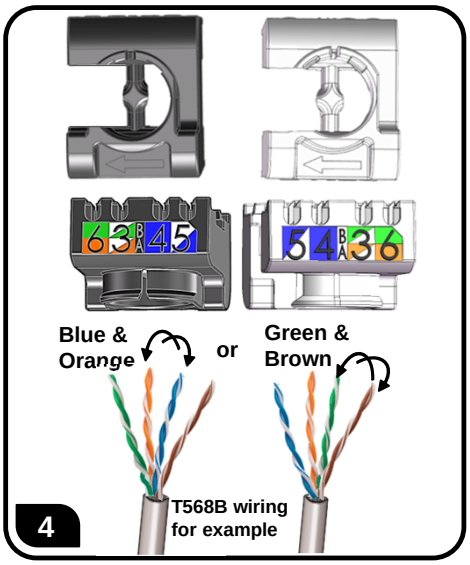

4

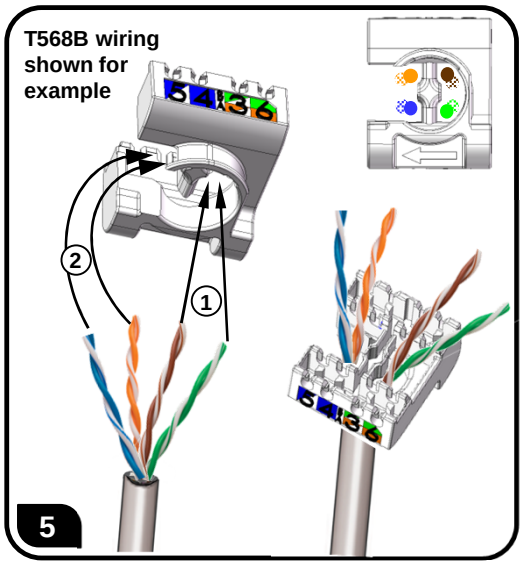

5

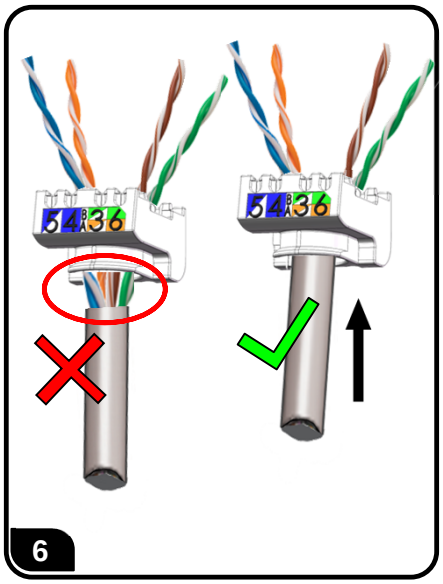

6

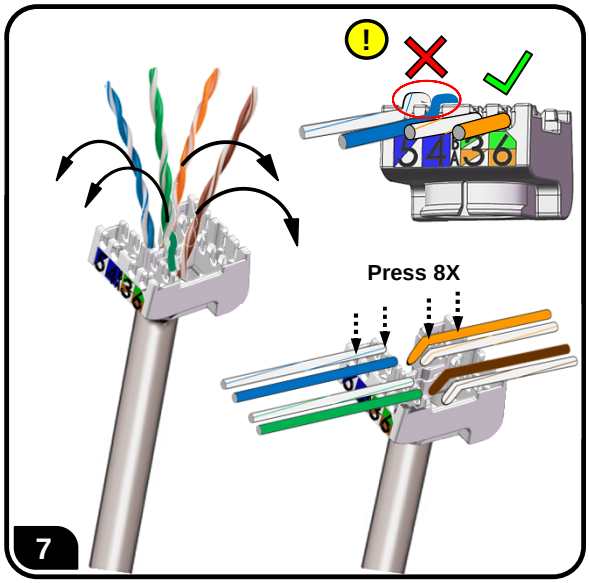

7

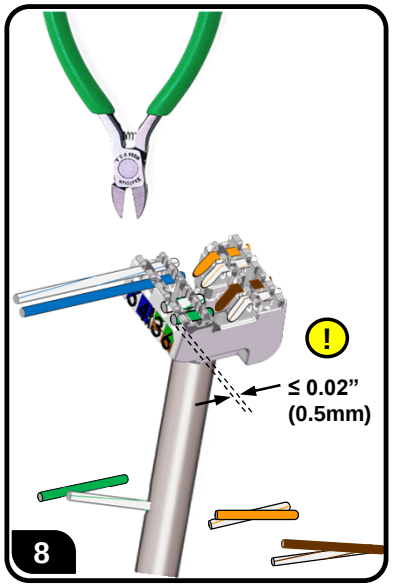

8

ILC Installation Instructions

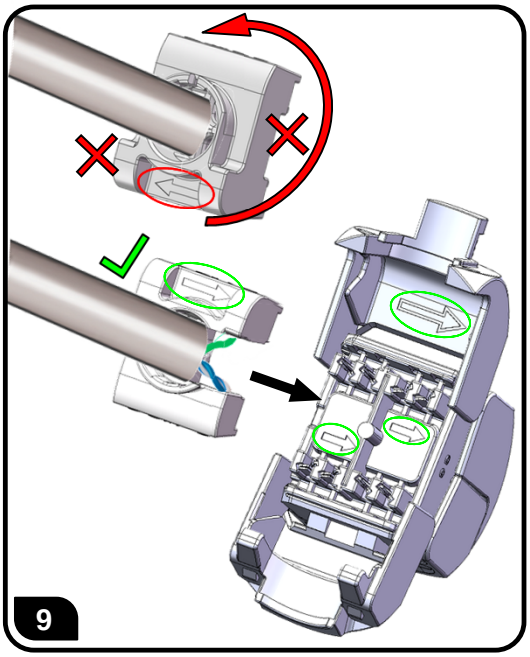

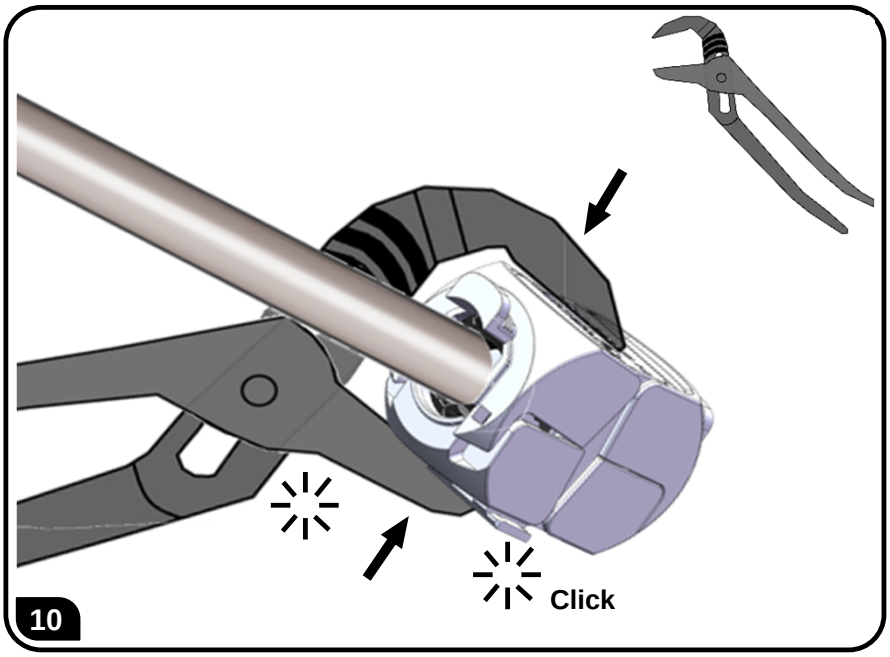

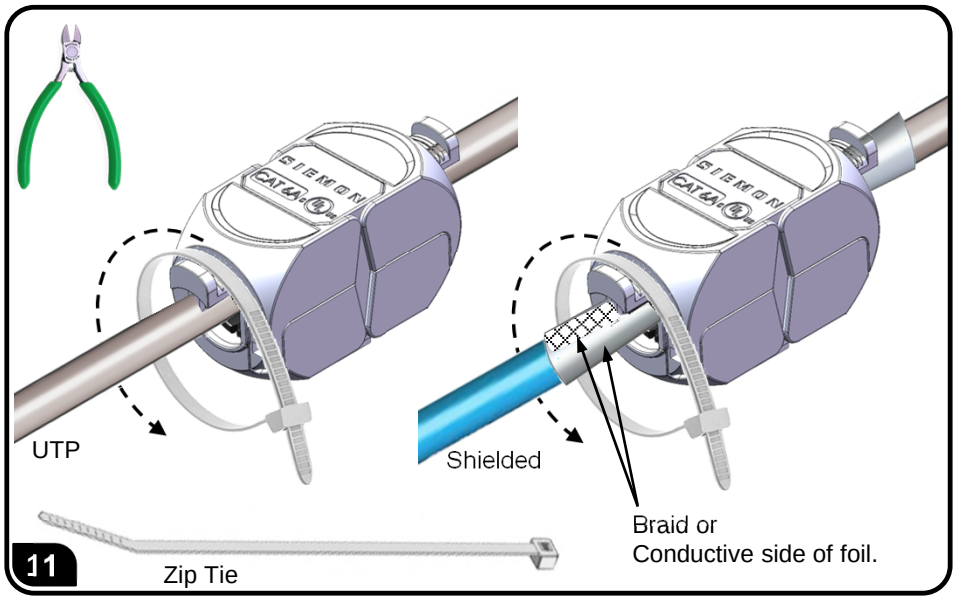

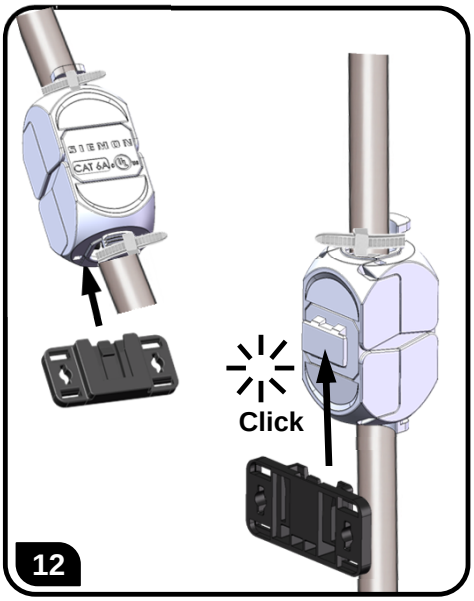

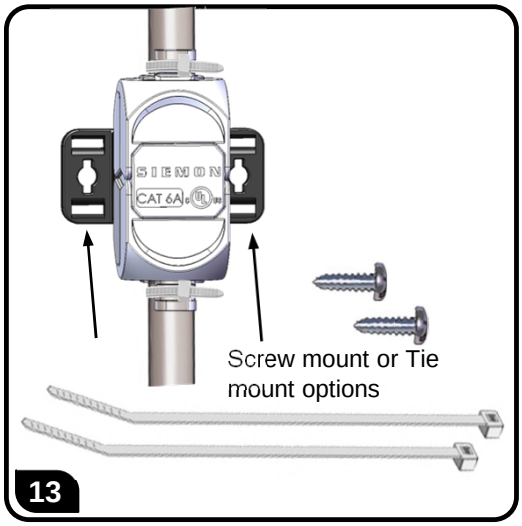

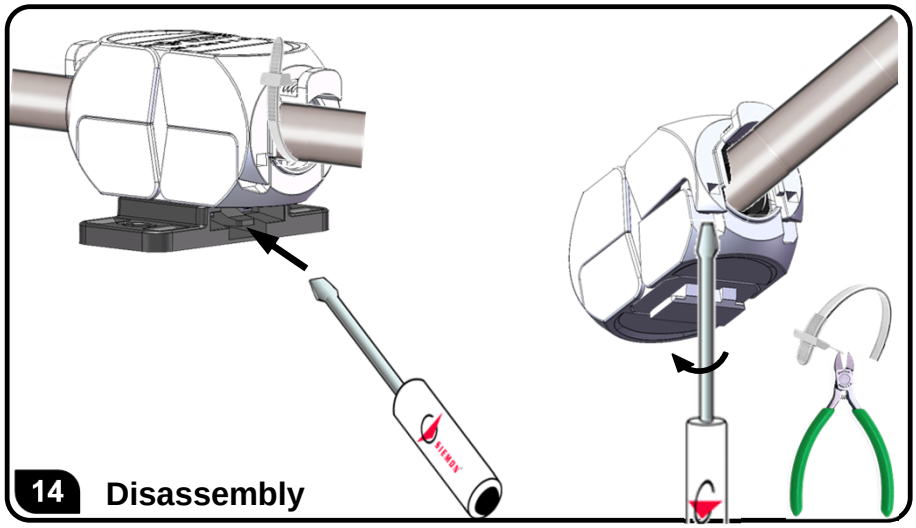

Note: Field testing the terminated ILC can be performed as either a Channel test or MPTL test.

ILC Installation Instructions

Alternate Step 1 cable constructions:

Fully Shielded (S/FTP)

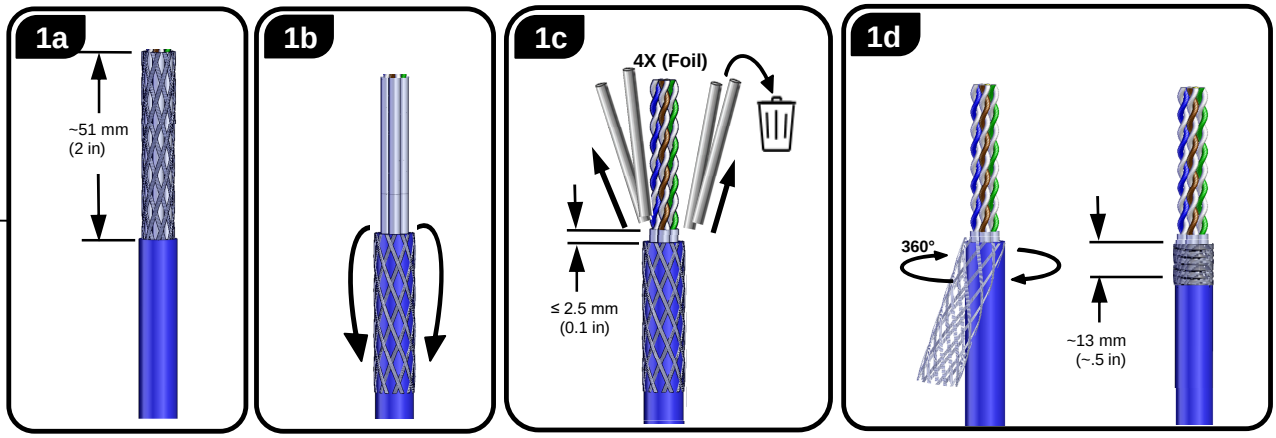

! Continue To Step 2

OSP (UTP or F/UTP)

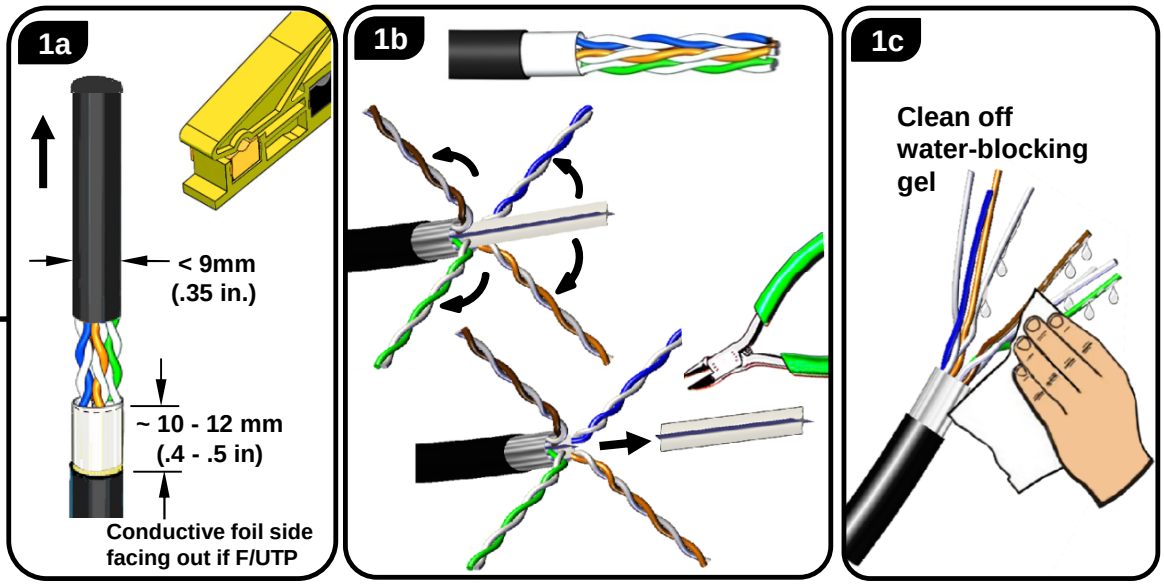

! Continue To Step 2

RJ45 Plug wire scheme identification T568B vs T568A

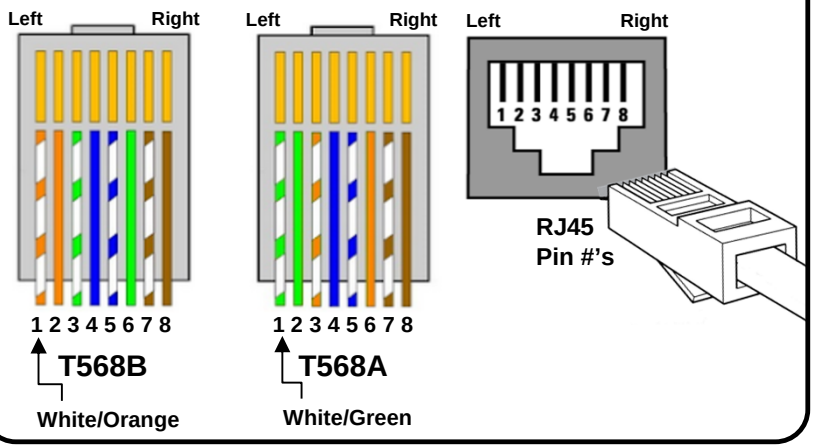

To assist safe installations, comply with the following:

A. Use caution when installing or modifying telecommunications circuits.
B. Never touch uninsulated wire terminals unless the circuit has been disconnected.
C. Never install this device in a wet location.
D. Never install wiring during a lightning storm.

Lors de l'installation, respectez les consignes de sécurité suivantes:

A. Utiliser avec prudence lors de l'installation ou de la modification circuits de télécommunications.
B. Ne jamais toucher les bornes de fil métallique non isolés sauf si le circuit a été débranché.
C. Ne jamais installer cet appareil dans un endroit humide.
D. Ne jamais installer pendant un orage.

To ensure you have the latest revision to this document, please visit: www.Siemon.com

Global Headquarters
Watertown, Connecticut USA
Tel: (1) 866-548-5814

For a complete listing of our global offices visit our web site

© 2025 Siemon Rev. A 06/25 100.28948.00