L-Series Outdoor Speakers and L-Series with LED Outdoor Speaker Strobes

System Sensor L-Series and L-Series with LED audible visible notification products are rich with features guaranteed to cut installation times and maximize profits with lower current draw and modern aesthetics.

Features

- LED technology provides lower current draw
- Weatherproof per NEMA 4X, IP56 as a standalone device
- Rated from -40°F to 151°F
- Electrically compatible with legacy SpectrAlert, SpectrAlert Advance and L-series devices at 16-33 VDC
- Field-selectable candela settings on wall units: 15, 30, 75, 95, 110, 135, and 185
- Field-selectable candela settings on ceiling units: 15, 30, 75, 95, 115, 150, and 177
- Rotary switches for candela, speaker voltage (25 and 70.7 Vrms) and power settings (¼, ½, 1, and 2 watts)
- Mounting plates with wirenuts are provided to make the connection between the field wiring and the mounting plates
- Synchronization through use of UL approved power supplies that support System Sensor Sync protocol or System Sensor MDL Sync Module
- Tamper-resistant construction
- Speakers and Speaker strobes listed for wall or ceiling use
- Speakers offer high fidelity and high volume sound output

Agency Listings

SIGNALING c UL us LISTED	SIGNALING c UL us LISTED	FM APPROVED	
Speaker-Strobes: S4048	Speakers: S4048	3057383 3057493	7125-1653:0538 7125-1653:0539

The System Sensor L-Series Outdoor Speakers and L-Series with LED Outdoor Speaker Strobes offer the most versatile and easy-to-use line of weatherproof speakers and speaker strobes that can meet virtually any application requirement, including indoor, outdoor, wet, dry, and washdown environment applications in temperatures from –40°F to 151°F. The speakers provide a broad frequency response range, low harmonic distortion offering a high-fidelity sound output while offering a high-volume sound output for use in high ambient noise applications.

The L-Series Outdoor and L-Series with LED Outdoor appliances are NEMA 4X and IP56 rated without having to seal the back box. Additional caulk or sealant are not required on the back box for a faster, cleaner installation. The L-Series platform offers a modern aesthetic across the indoor and outdoor platform and design variations across applications: wall or ceiling mount, red or white color choices, LED colored lenses for distinctive visual signaling. In addition, installers can easily adjust appliances through rotary switches for candela, speaker voltage and power settings.

LED technology offers significantly lower current draw compared to older Xenon bulbs across a full candela range. This improves design flexibility for notification appliance circuits (NACs) while also reducing power supply requirements allowing for simpler and lower cost installations. UL listed waterproof wirenuts are provided to make the connection between the field wiring and the mounting plates.

The outdoor devices ship with plastic back boxes that accommodate in-and-out wiring for daisy chaining devices. Knock-outs located on the back eliminate the need to drill holes for screw-in mounting.

Note: When replacing SpectrAlert Advance products, the backbox must be updated to the L-Series with LED backbox.

Product Specifications

Physical / Electrical Specifications	
Standard Operating Temperature	-40 °F to 151 °F (-40 °C to 66 °C))
Humidity Range	0 to 95 ±5%
Power	¼, ½, 1, 2 Watts
Frequency Range	400 to 4000 Hz
Maximum Supervisory Voltage (Speakers)	50 VDC
Maximum Supervisory Voltage (Strobe)	33 VDC
Strobe Flash Rate	1 Flash Per Second
Nominal Voltages, Speakers	25 Volts or 70.7 Volts (nominal)
Nominal Voltage, Strobe	Regulated 24 VDC
Operating Voltage Range, Strobe	16 to 33 VDC
Input Terminal Wire Gauge	12 to 18 AWG

Dimensions	
Wall Speaker Strobes (including lens)	6.69" L x 5.16" W x 2.47" D (170mm L x 131mm W x 63mm D)
Wall Speaker Strobes (including lens) with SBBSPRL/WL Surface Mount Back Box	6.69" L x 5.16" W x 4.72" D (170mm L x 131mm W x 120mm D)
Ceiling Speaker Strobes (including lens)	6.97" diameter x 2.23" D (177mm x 57mm)
Ceiling Speaker Strobes (including lens) with SBBCRL/WL Surface Mount Back Box	6.97" diameter x 4.73" D (177mm x 127mm)
Wall Speakers	6.69" L x 5.16" W x 1.72" D (170mm L x 131mm W x 44mm D)
Wall Speakers with SBBSPRL/WL Surface Mount Back Box	6.69" L x 5.16" W x 3.97" D (1700mm L x 131mm W x 101mm D)
Ceiling Speakers	6.97" diameter x 1.2" D (177mm x 31mm)
Ceiling Speakers with SBBCRL/WL Surface Mount Back Box	6.97" L diameter x 3.97" D (177mm x 101mm)
NOTE: SBBSPRL/WL Surface Mount Back Box intended for speaker strobes and speakers.	

Minimum Speaker Strobe Sound Output				
	¼ W	**½ W**	**1 W**	**2 W**
UL Reverberant (dBA @10 ft)	77	81	83	85
UL Anechoic (dBA @10 ft)	77	81	83	85

Minimum Speaker Only Sound Output				
	¼ W	**½ W**	**1 W**	**2 W**
UL Reverberant (dBA @10 ft)	77	81	83	85
UL Anechoic (dBA @10 ft)	77	81	83	85

UL / ULC Current Draw

UL/ULC Maxmimum Strobe Current Draw (mA)			
	Candela Rating	**16–33 Volts**	
		Wall	**Ceiling**
Candela Range	15	18	18
	30	22	22
	75	70	70
	95	75	75
	110	85	—
	115	—	90
	135	105	—
	150	—	110
	177	—	115
	185	120	—

L-Series Dimensions

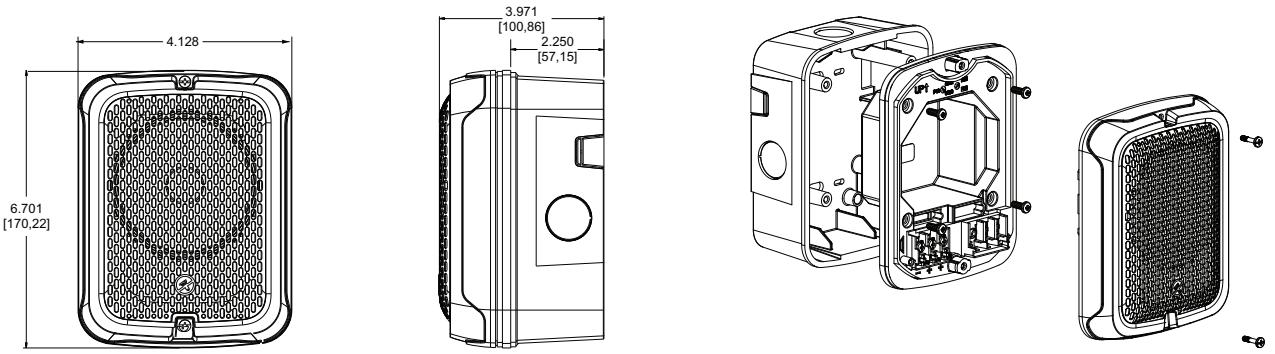

Outdoor Wall Speaker with Surface Mount Back Box (SBBSPRL/ SBBSPWL)

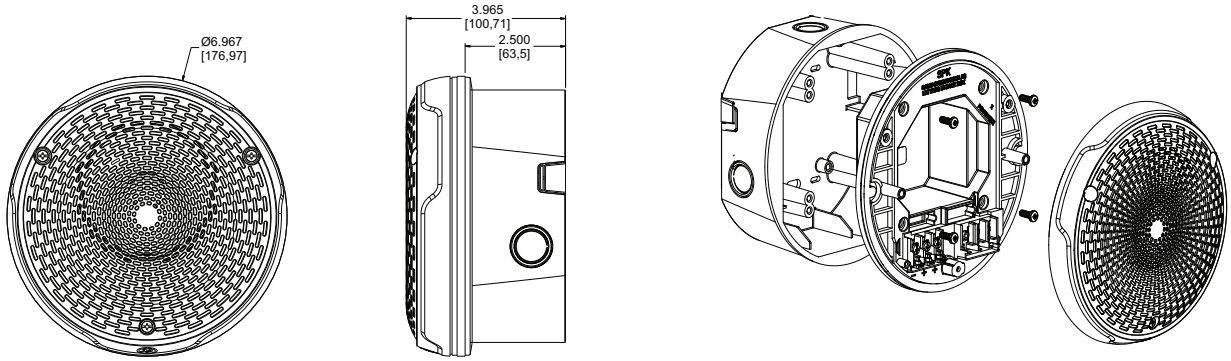

Outdoor Ceiling Speaker with Surface Mount Back Box (SBBCRL/SBBCWL)

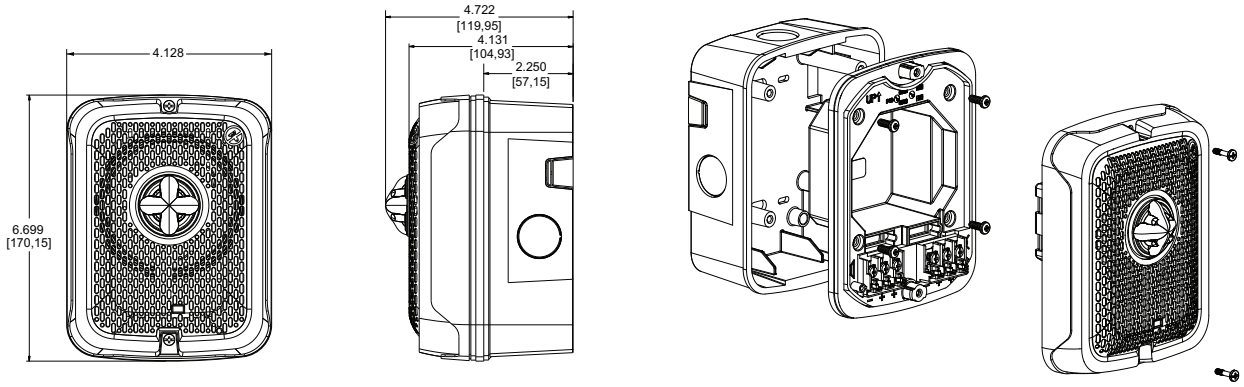

Outdoor Wall Speaker Strobes with Surface Mount Back Box (SBBSPRL/SBBSPWL)

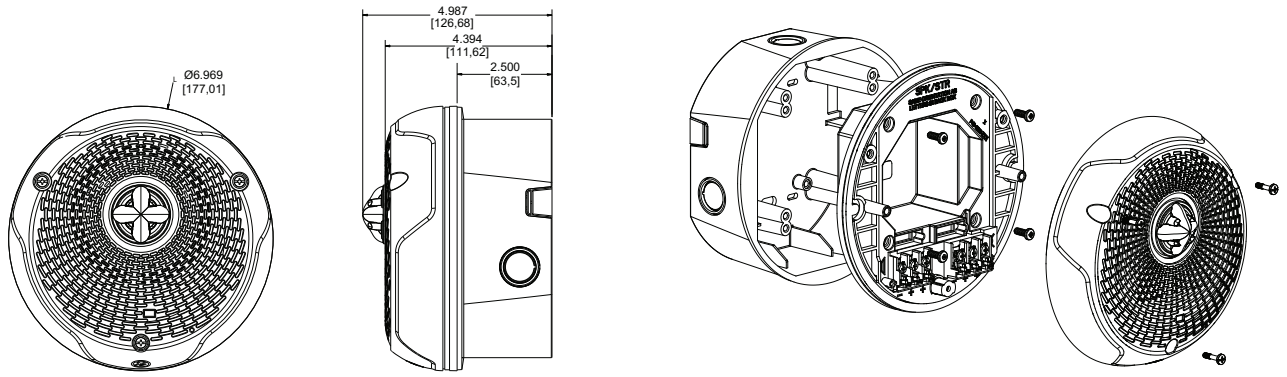

Outdoor Ceiling Speaker Strobes with Surface Mount Back Box (SBBCRL/SBBCWL)

L-Series with LED: Ordering Information

Model	Description
L-Series with LED Outdoor Speaker Strobes	
SPSRKLED	Outdoor Speaker Strobe, Wall, Red
SPSRKLED-P	Outdoor Speaker Strobe, Wall, Red, Plain
SPSRKLED-B	Outdoor Speaker Strobe, Wall, Red, Bilingual
SPSWKLED	Outdoor Speaker Strobe, Wall, White
SPSWKLED-P	Outdoor Speaker Strobe, Wall, White, Plain
SPSWKLED-B	Outdoor Speaker Strobe, Wall, White, Bilingual
SPSWKLED-CLR-ALERT	Outdoor Speaker Strobe, Wall, White, Alert, Clear lens
SPSCWKLED	Outdoor Speaker Strobe, Ceiling, White
SPSCWKLED-P	Outdoor Speaker Strobe, Ceiling, White, Plain
SPSCWKLED-B	Outdoor Speaker Strobe, Ceiling, White, Bilingual
SPSCWKLED-CLR-ALRT	Outdoor Speaker Strobe, Ceiling, White, Alert, Clear lens
L-Series Outdoor Speakers	
SPRKL	Outdoor Speaker, Wall, Red, Plain
SPWKL	Outdoor Speaker, Wall, White, Plain
SPCWKL	Outdoor Speaker, Ceiling, White, Plain
Accessories	
SBBSPRL	Back Box, Wall, Speaker, Red
SBBSPWL	Back Box, Wall, Speaker, White
SBBCRL	Back Box, Ceiling, Speaker, Red
SBBCWL	Back Box, Ceiling, Speaker, White
LED Lenses	
LENS-A3	Lens LED Amber Wall/Ceiling
LENS-B3	Lens LED Blue Wall/Ceiling
LENS-G3	Lens LED Green Wall/Ceiling
LENS-R3	Lens LED Red Wall/Ceiling

Notes for L-Series with LED Outdoor Speaker Strobes:

- All -P models have a plain housing (no “FIRE” marking on cover.)
- All -ALERT models have “ALERT” marking on cover.
- All -B models have “FIRE/FEU” marking on cover.

3825 Ohio Avenue • St. Charles, IL 60174 USA
Phone: 800-SENSOR2 • Fax: 630-377-6495
www.systemsensor.com

3333 Unity Drive, Mississauga, ON L5L 3S6 Canada
Phone: 800-SENSOR2 • Fax: 905-812-0771
www.systemsensor.ca

System Sensor® is a registered trademark of Honeywell International, Inc.

©2025 System Sensor.
Product specifications subject to change without notice. Visit systemsensor.com for current product information, including the latest version of this data sheet.
AVDS-62185-00 • 03/17/2025