PRODUCT DIMENSIONS

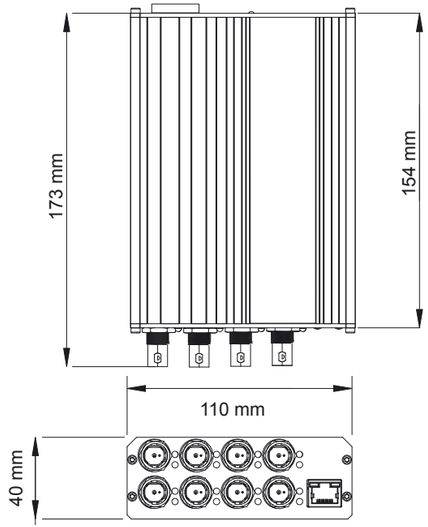

RoHS

Veracity UK Ltd Prestwick International Aerospace Park, 4 Dow Road, Prestwick, KA9 2TU. UK

Veracity's Authorised Representative in the EU (as required by EU law for CE marked goods) is: Comply Express Unipessoal Limitada, StartUp Madeira, EV141, Campus da Penteada, 9020 105 Funchal, Portugal.

© Veracity UK Ltd 2025 ADNM DV1.2 EN HIGHWIRE Powerstar Base 8 Linklock is a registered trademark of Veracity UK Ltd

CONNECTIONS AND LEDS

LOCATION	POE LED	FUNCTION	GREEN	ORANGE	RED
A	**COAX LINK ACTIVITY**	Coax data connection	**Blink** = No link to camera **On** = 100Base-TX to camera **Flash** = 100Base-TX activity	**Blink** = 10Base-T link to camera **Flash** = 10Base-T activity	**On** = Data rate <100% Cable distance at limit **Flash** = LINKLOCK protected
B	**COAX POE (Power)**	POE over coax status	**On** = Device detected	**On** = Approaching power limit **Flash** = Short circuit. Check for cable faults or incompatible equipment	**On** = Power limit reached **Flash** = LINKLOCK protected mode. To Arm the device the ARM/RESET input should be triggered.

8 x BNC connectors. Connect to any 75 ohm coaxial cable.

LED A and B will both flash Red when in LINKLOCK protected mode. To Arm the device the ARM/RESET input should be triggered.

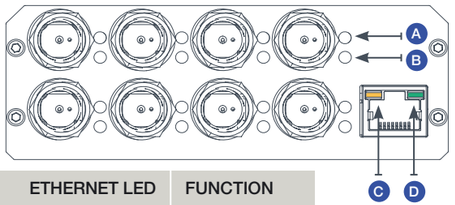

	ETHERNET LED	FUNCTION
C	**RJ45 Yellow**	On = Link Blink = Activity
D	**RJ45 Green**	On = Power on

CONNECTIONS AND LEDS

57V Power Supply Options | Connect to either option 1 **OR** option 2

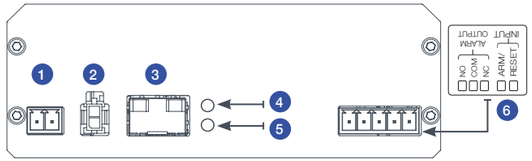

FUNCTIONS
1 57V DC Power
2 57V DC Power
3 SFP Module
4 SFP Top LED
5 SFP Bottom LED
6 LINKLOCK Pins

SFP LED	OPERATION
Top 4	**Red** = No module inserted **Green** = Device inserted
Bottom 5	**Off** = No module inserted **Red** = No device link detected **Green** = Link detected

VHW-HWPS-B8-LL

QUICKSTART ADDENDUM

TAMPER-PROOF ETHERNET AND POE OVER COAX

HIGHWIRE®
POWERSTAR BASE 8
LINKLOCK

veracity

APPLICATION DIAGRAM ETHERNET OVER COAX WITH LINKLOCK™

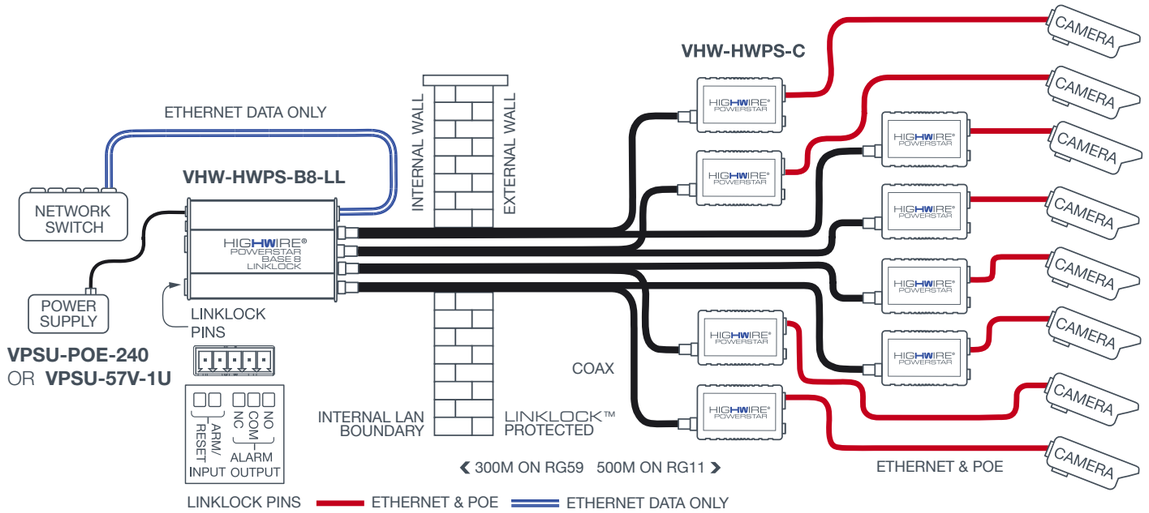

LINKLOCK™ OVERVIEW

The LINKLOCK variant of HIGHWIRE Powerstar Base 4 and Base 8 units adds tamper-detection to the signal cabling, starting from the coax output at the Base unit.

Any tampering with the coax cable, the HIGHWIRE Camera device or the network cable between it and the IP camera, including disconnection, “tapping in” or any other interference with the normal signal transmission will cause an immediate shutdown of signal and power from the Base device on that channel.

ARM/RESET INPUT

- Clears the LINKLOCK protection and flashing LEDs, resets and arms the device.
- Triggered by the two INPUT terminals becoming electrically connected, typically using clean relay contacts or a push button.
- Contacts may remain connected or only be connected momentarily, however connecting them momentarily is best practice.

ALARM OUTPUTS

- **NO** = Normally Open, **COM** = Common, **NC** = Normally Closed
- **NC** and **COM** are connected during normal operation
- **NO** and **COM** are connected to signal an alarm when LINKLOCK protection is triggered or if there is no power

OPERATION

- The HIGHWIRE will go into LINKLOCK protected mode on power up and must be armed before use (this prevents tampering by power-cycling the units).
- Once the ARM/RESET contact has triggered, the unit will operate as normal and deliver power and data connections to the remote HIGHWIRE unit.
- Cables may be connected and disconnected initially as required, to allow the IP camera installation to be completed.
- Once an Ethernet connection to the camera has been established for 3 minutes, the LINKLOCK protection is armed.
- Any cable disconnection or tampering after this time will trigger the LINKLOCK protected mode and disable the data and power.
- The connection can be restored again by closing the IN contacts as before.

IMPORTANT SAFETY NOTES

- This equipment is designed for indoor use only.
- If the equipment is used in a manner not specified by the manufacturer, the protection provided by the equipment may be impaired.
- Contact details for Sales and Technical Support can be found on the Company website: **www.veracityglobal.com**