TOA SUBWOOFER WALL MOUNTING BRACKET HY-WM-FB08W

■DESCRIPTION

The HY-WM-FB08W is used to mount the FB-08WT Subwoofer System to a wall.

■SPECIFICATIONS

Applicable Speaker	FB-08WT
Finish	Steel plate, white (RAL 9016 equivalent), paint
Weight	1 kg (2.2 lb)
Product Composition	Speaker bracket ···1, Wall bracket ···1
Accessory	Speaker mounting bolt ···2, Speaker bracket mounting bolt ···4

Note: Bolts and nuts for mounting the bracket to the wall are not included. Prepare them separately.

■APPEARANCE

Speaker bracket

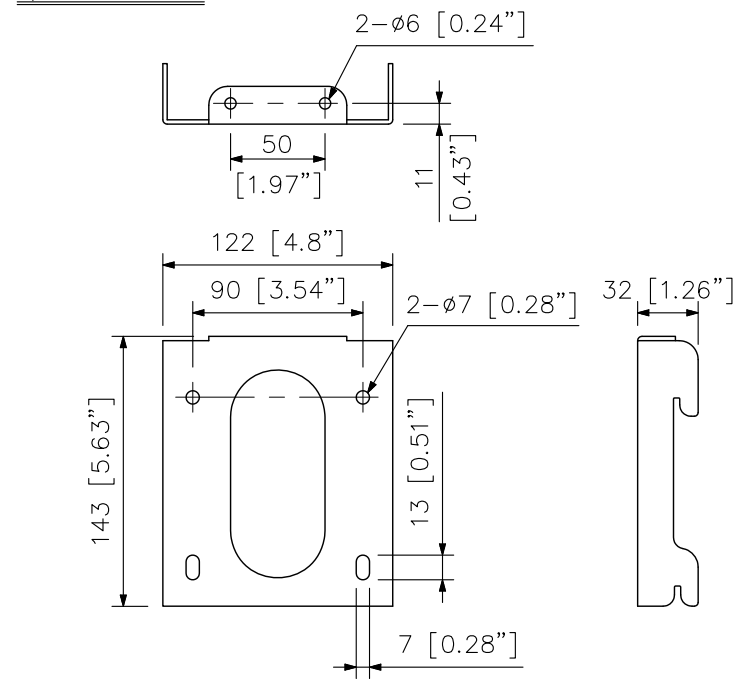

Wall bracket

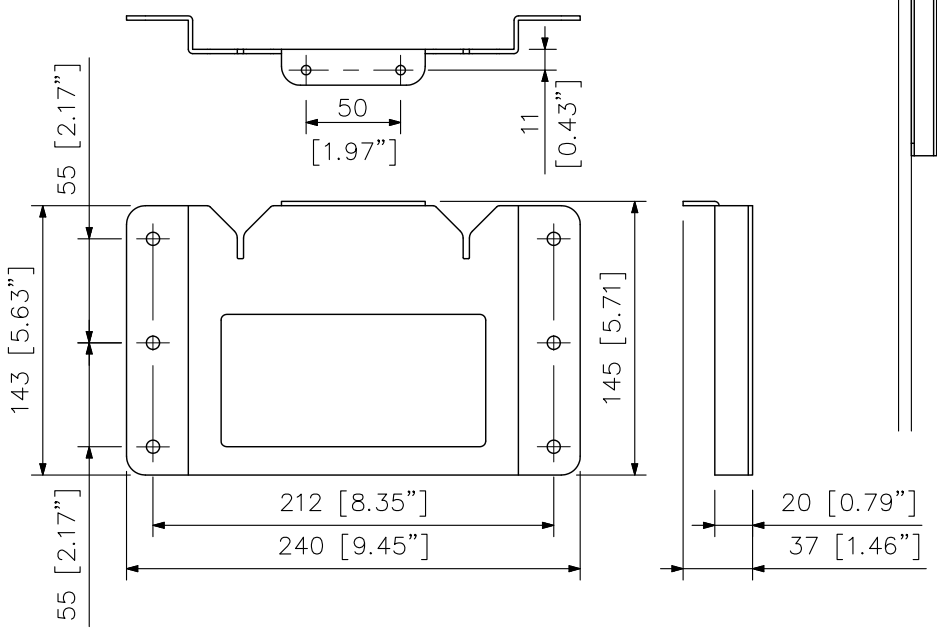

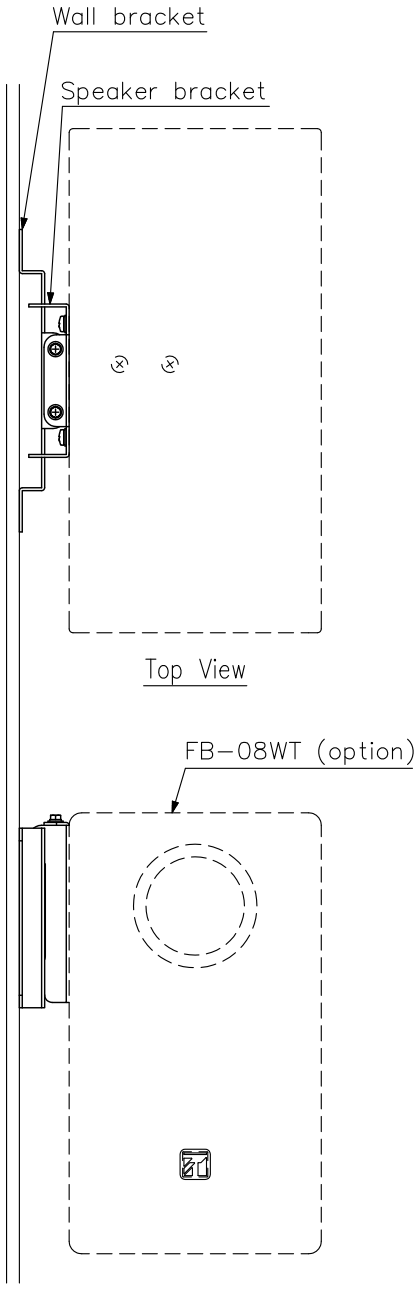

Mounting example
(scale: 1/6)

UNIT: mm SCALE: 1/4

TOA Corporation

DWG No: