TOA

SUBWOOFER CEILING MOUNTING BRACKET

HY-CM-FB08W

■DESCRIPTION

The HY-CM-FB08W is used to mount the FB-08WT Subwoofer System to a ceiling.

■SPECIFICATIONS

Applicable Speaker	FB-08WT
Finish	Steel plate, white (RAL 9016 equivalent), paint
Dimensions	358 (W) × 170 (H) × 92 (D) mm (14.09" × 6.69" × 3.62")
Weight	1.4 kg (3.09 lb)
Accessory	Speaker mounting bolt ···4

Note: Bolts and nuts for mounting the bracket to the ceiling are not included. Prepare them separately.

■APPEARANCE

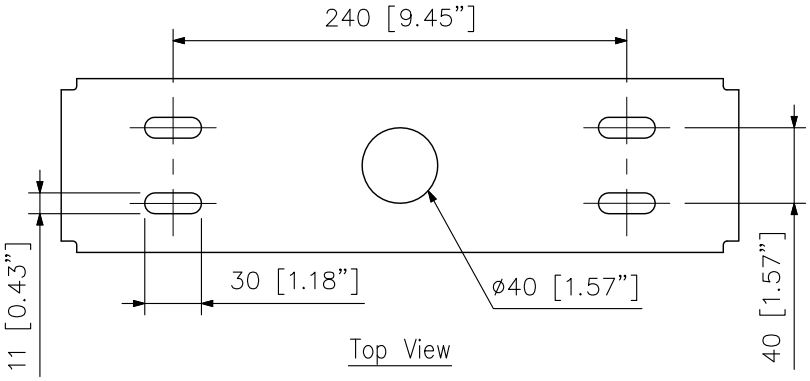

Top View

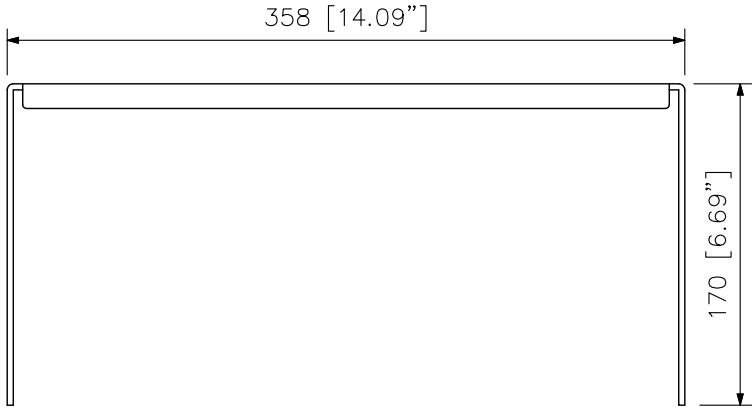

Front View

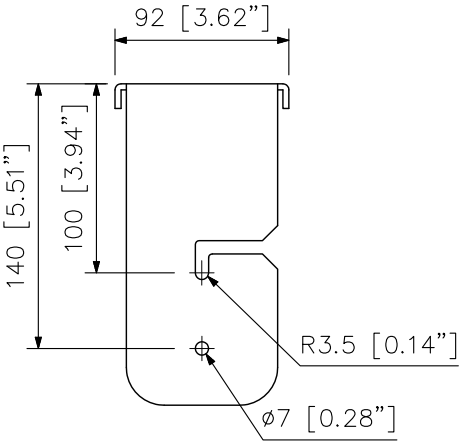

Side View

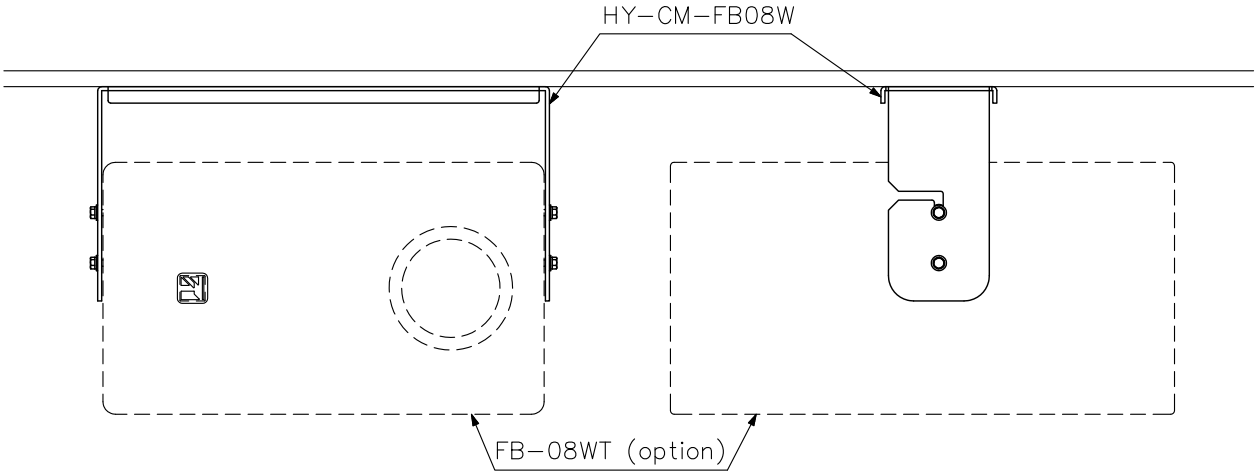

Mounting example
(scale: 1/6)

UNIT: mm SCALE: 1/4

TOA Corporation

DWG No: