TOA

SPEAKER SYSTEM

F-05BT

■DESCRIPTION

A compact 2-way speaker with high quality sound that can suit a wide range of scenes such as background music and announcements use. Excellent design of this speaker that can blend with a wide variety of architectural styles, making the speaker ideal for installation in various scenes. Excellent workability as the speaker can be easily temporarily fixed at installation, allowing both hands free during adjustment or wiring.

■SPECIFICATIONS

Enclosure	Bass-reflex type
Power Handling Capacity (*1)	Rated noise power: 60 W (8 Ω) Continuous program: 120 W (8 Ω)
Rated Input	30 W (100 V line, 70 V line)
Rated Impedance	8 Ω 100 V line: 330 Ω (30 W), 1 kΩ (10 W), 3.3 kΩ (3 W), 10 kΩ (1 W) 70 V line: 170 Ω (30 W), 330 Ω (15 W), 1 kΩ (5 W), 3.3 kΩ (1.5 W), 10 kΩ (0.5 W)
Sensitivity	90 dB (1 W, 1 m) at installation in 1/2 free sound field
Frequency Response	60 Hz – 20 kHz, −10 dB at installation in 1/2 free sound field
Crossover Frequency	4.5 kHz
Directivity Angle	Horizontal: 100°, Vertical: 100°
Speaker Component	Low frequency: 13 cm (5") PPcone-type High frequency: 25 mm (1") dome tweeter
Input Terminal	Push-in terminal
Operating Temperature	−10 °C to +50 °C (14 °F to 122 °F)
Installation Environment	Indoor installation
Finish	Enclosure: HIPS, black (RAL 9011 equivalent), paint Grille: Aluminium, black (RAL 9011 equivalent), paint Speaker bracket: Die-cast aluminum, black (RAL 9011 equivalent), paint Base bracket: Steel plate, t4, black (RAL 9011 equivalent), paint Base bracket cover: HIPS, black (RAL 9011 equivalent)
Dimensions	162 (W) × 274 (H) × 164 (D) mm (6.38" × 10.79" × 6.46")
Weight	2.7 kg (5.95 lb)
Accessory	Speaker bracket ···1, Base bracket ···1, Base bracket cover ···1, Bracket fixing screw ···1 set
Option	Adapter plate: HY-F05B Speaker stand: ST-34B Note: K&M 19780 or K&M 19610 is required.

(*1) Rated noise power is defined by IEC60268-5. Continuous program is 3 dB above Rated noise power.
Note: Bolts and nuts for mounting the bracket to the wall or ceiling are not included. Prepare them separately.

■APPEARANCE

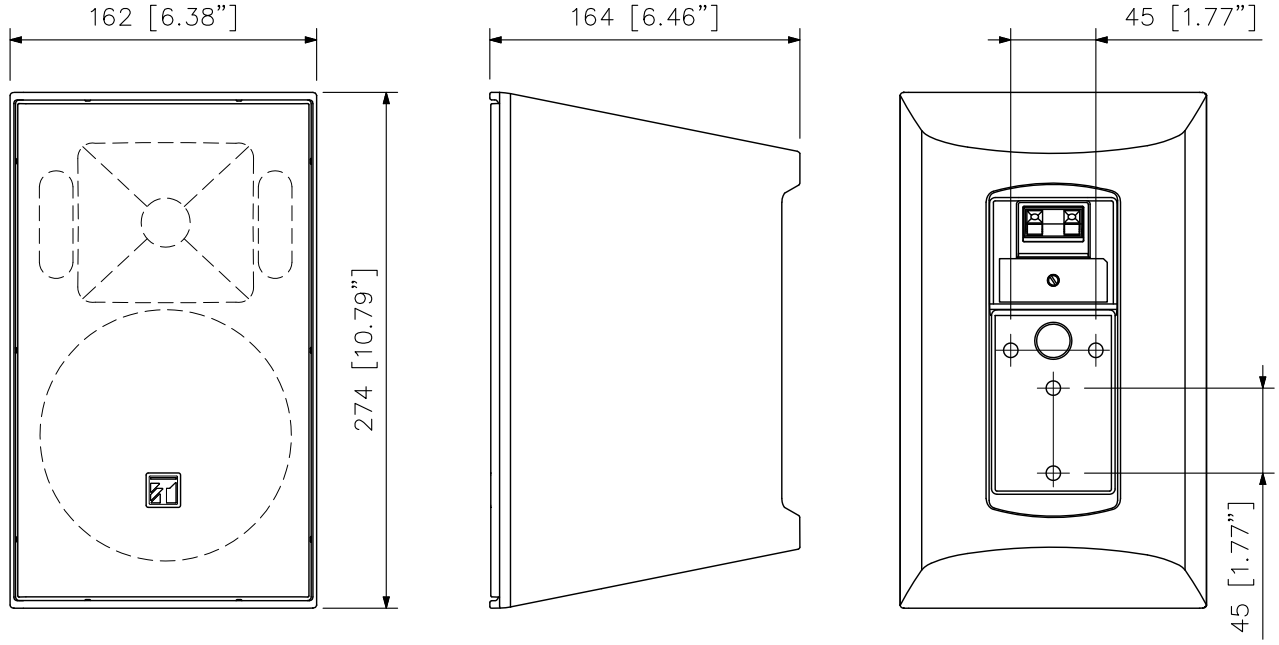

Front View　　Side View　　Rear View

UNIT: mm　SCALE: 1/4

TOA

SPEAKER SYSTEM

F-05BT

Wall mounting example

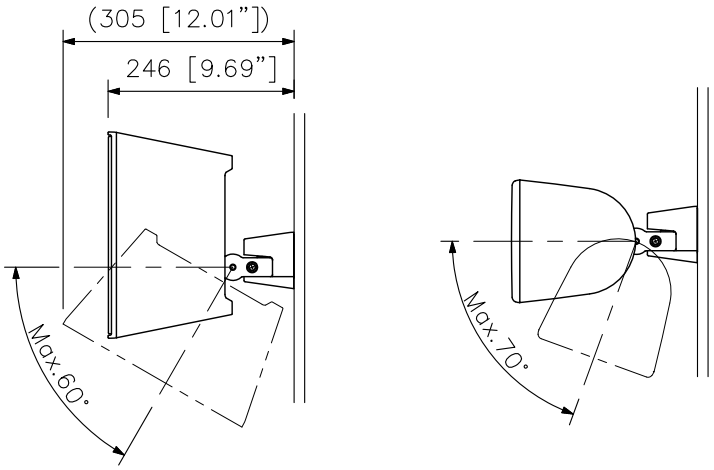

The angle can be adjusted in 10° steps.

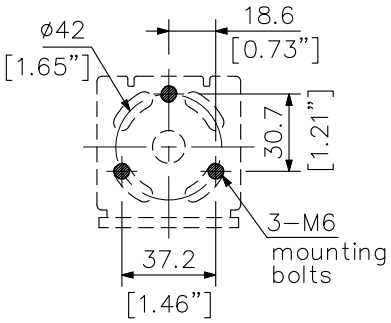

Dimensions of
wall mounting hole
(base bracket (accessory))
(scale: 1/3)

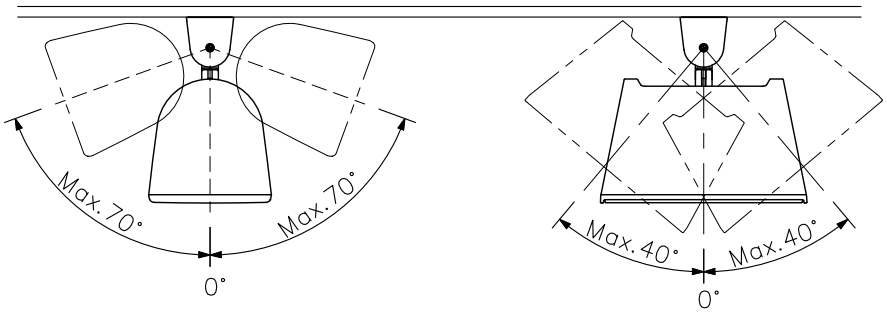

Ceiling mounting example

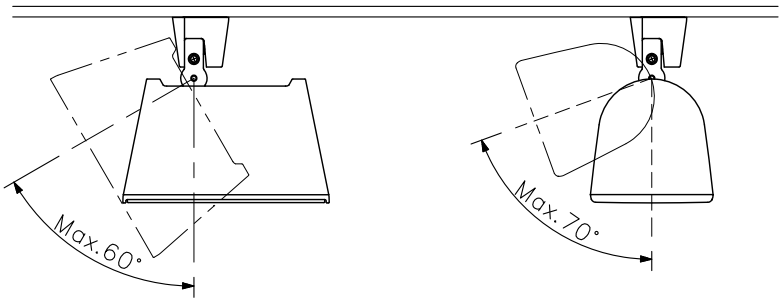

The angle can be adjusted in 10° steps.

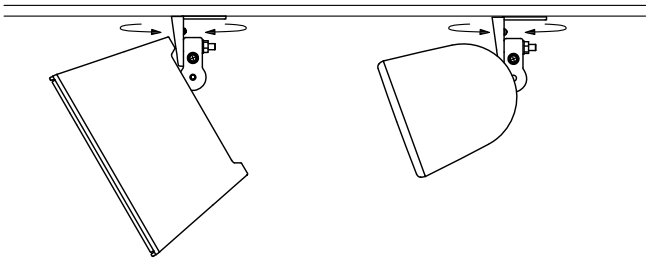

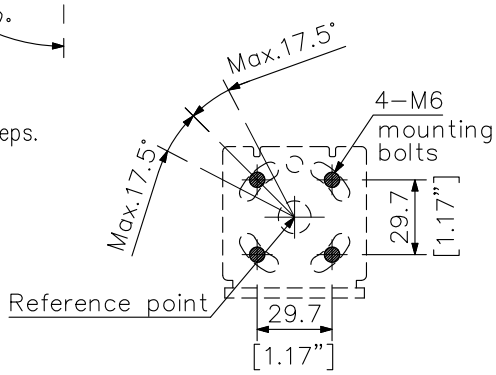

Dimensions of wall or
ceiling mount hole
(base bracket (accessory))
(scale: 1/3)

The angle can be adjusted up to 17.5° left or right from the "Reference point" in the Base bracket.

UNIT: mm SCALE: 1/10

Note: For the details of the installation location of the Base bracket, refer to the instruction manual.