THIS COPY IS PROVIDED ON A RESTRICTED BASIS AND IS NOT TO BE USED IN ANY WAY DETRIMENTAL TO THE INTERESTS OF PANDUIT CORP.

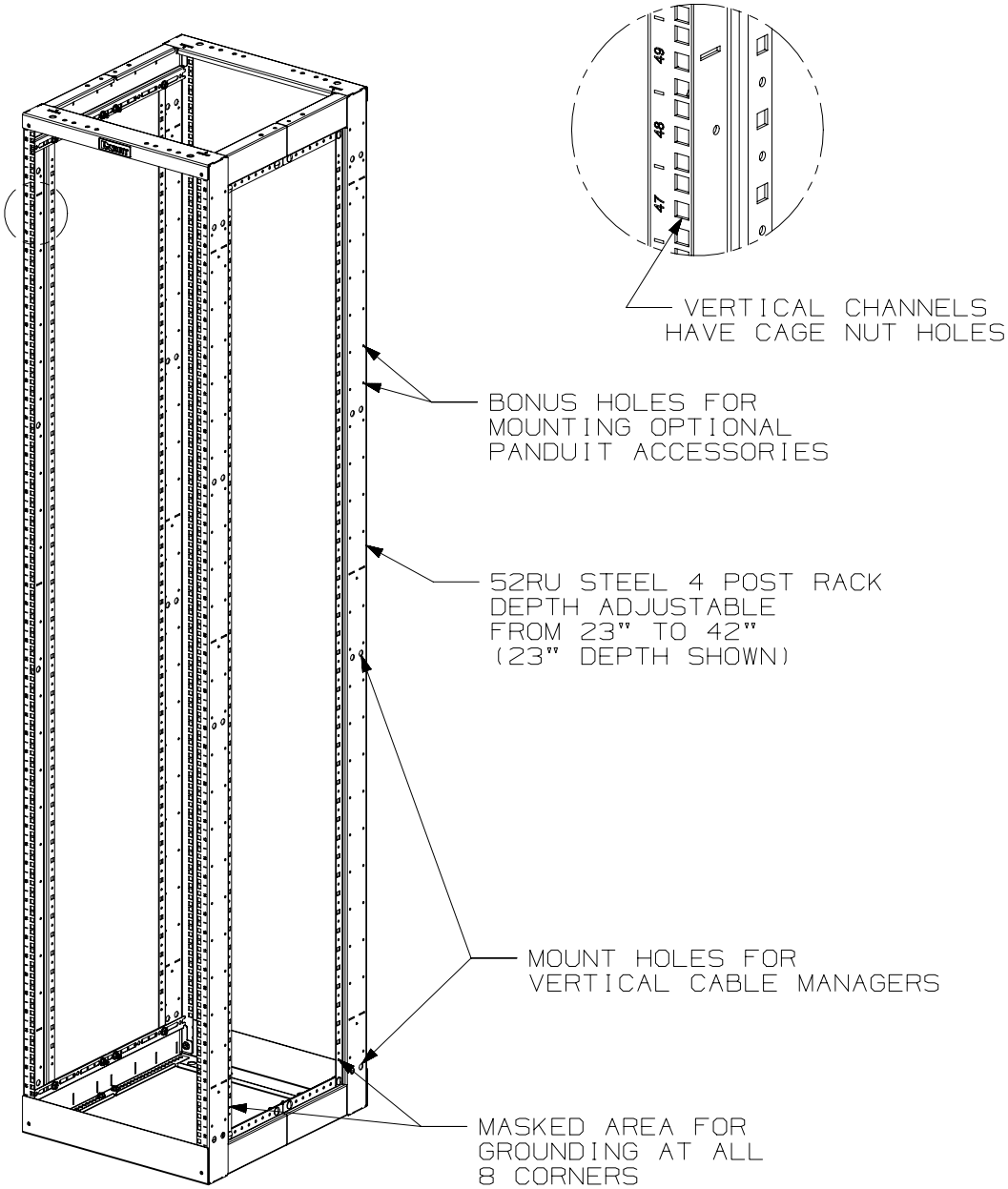

NOTES:

1. VISIT OUR ON-LINE CATALOG AT WWW.PANDUIT.COM FOR A LIST OF CURRENT PARTS APPLICABLE FOR USE WITH THIS PRODUCT.
2. DIMENSIONS IN PARENTHESIS ARE METRIC.
3. RACK DEPTH IS ADJUSTABLE FROM 23" TO 42" AT 1/2" INCREMENTS.
4. CAN BE USED WITH ANY EIA STANDARD COMPONENT IN ADDITION TO ALL PANDUIT HORIZONTAL CABLE MANAGEMENT AND PATCH PANEL PRODUCTS.
5. 52 AVAILABLE RACK SPACES.
6. EIA UNIVERSAL STANDARD HOLE PROGRESSION ON FRONT AND REAR CHANNELS. .625",.625",.500",.625",.625",.500"...ETC.
7. ALL RACKS WILL HAVE NUMBERS UP ORIENTATION (RU "01" ON BOTTOM, RU "52" ON TOP).
8. RU SPACING NUMBERS ARE CLEARLY PRINTED ON MOUNTING RAILS.
9. ALL ASSEMBLY HARDWARE INCLUDED:
   - (2) 96" TALL WELDED RACK FRAME WITH CAGE NUT MOUNT HOLES
   - (4) ADJUSTABLE DEPTH MOUNT BRACKETS
   - (1) HARDWARE KIT
10. EASY ASSEMBLY, ONE WRENCH NEEDED.
11. FULLY BONDED STRUCTURE WHEN ASSEMBLED PER INSTRUCTIONS.
12. LOAD RATING - 2000 lbs.
13. WEIGHT: 71 lbs [32.2 kg].

REV	DATE	BY	CHK	APR	DESCRIPTION	ECN
02C	4-28-23	TWV	MPOL	KCOR	ADDED TOP HOLE DIMENSIONS	M09000ME
02B	2-8-22	TWV	KRKE	JEFK	UPDATED GROUNDING MASKED AREA NOTE	M09000LA/07

A-SIZE CUSTOMER

PART NUMBER: AR4PCN96 / AR4PCN96WH

TITLE: STEEL 4 POST RACK, 52RU CAGE NUT RAILS, ADJUSTABLE DEPTH FROM 23" TO 42"

CUSTOMER DRAWING

ITEM REVISION NAME: 00448EAB/02

DATASET FILE NAME: 00448EAB_DC/02C

THIRD ANGLE PROJECTION

PANDUIT

MATERIAL: STEEL

DRAWING NUMBER: 00448EAB-DC

DRAWN BY	DATE	CHK	SCALE	SHEET 1 OF 3	SIZE
TWV	10-21-19	RYB	NONE		A

THIS COPY IS PROVIDED ON A RESTRICTED BASIS AND IS NOT TO BE USED IN ANY WAY DETRIMENTAL TO THE INTERESTS OF PANDUIT CORP.

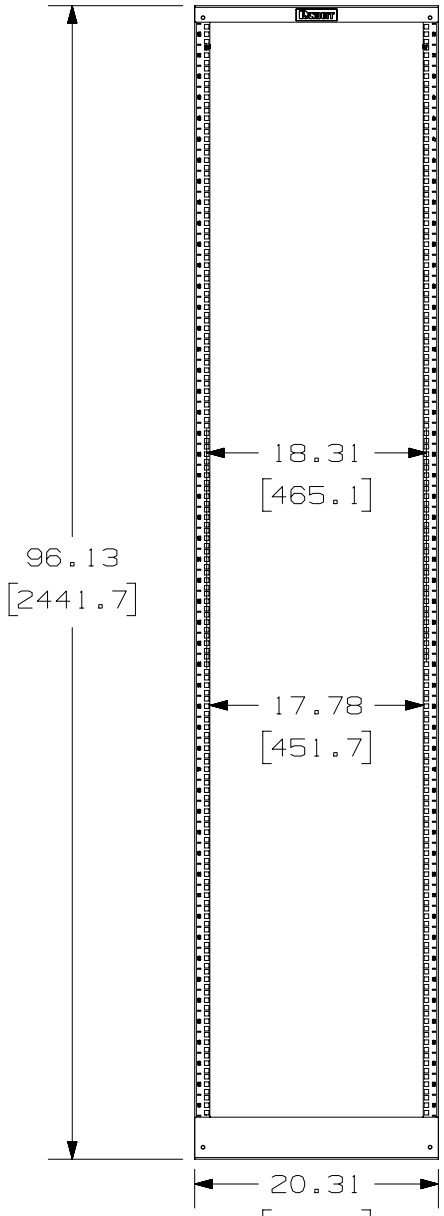

FRONT VIEW

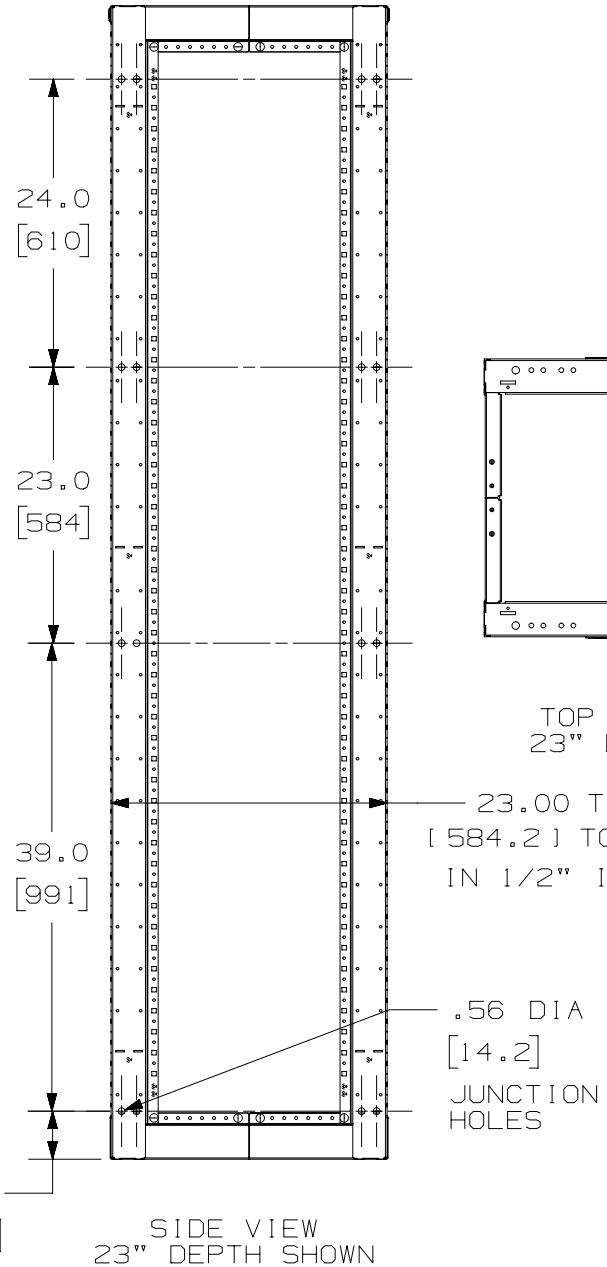

SIDE VIEW
23" DEPTH SHOWN

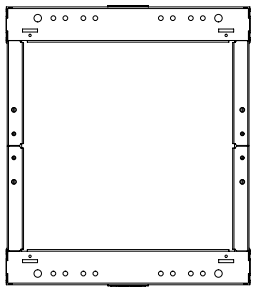

TOP VIEW
23" DEPTH

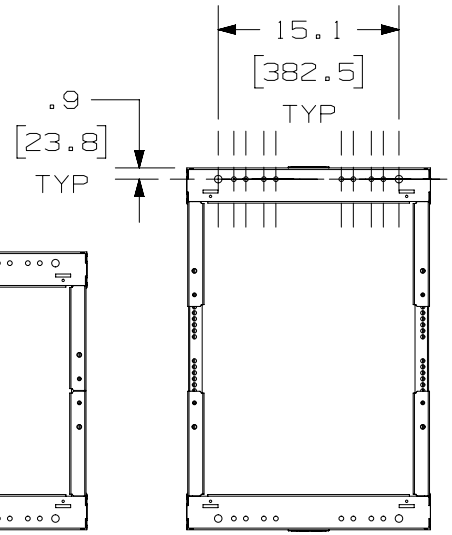

TOP VIEW
30" DEPTH

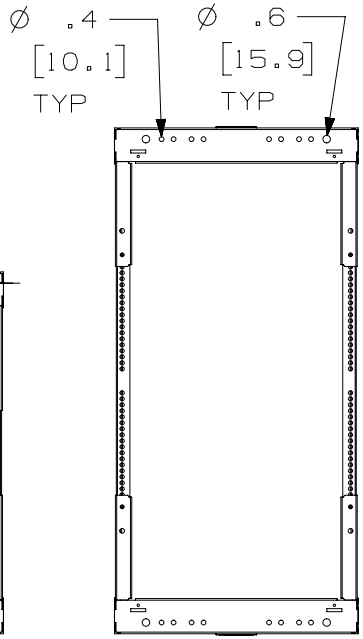

TOP VIEW
42" DEPTH

REV	DATE	BY	CHK	APR	DESCRIPTION	ECN
02C	4-28-23	TWV	MPOL	KCOR	SEE SHEET ONE FOR REVISIONS	M09000ME
02B	2-8-22	TWV	KRKE	JEFK	SEE SHEET ONE FOR REVISIONS	M09000LA/07

A-SIZE CUSTOMER

PART NUMBER
AR4PCN96 / AR4PCN96WH

TITLE
STEEL 4 POST RACK, 52RU CAGE NUT RAILS, ADJUSTABLE DEPTH FROM 23" TO 42"
CUSTOMER DRAWING

ITEM REVISION NAME
00448EAB/02

DATASET FILE NAME
00448EAB_DC/02C

THIRD ANGLE PROJECTION

PANDUIT

MATERIAL
STEEL

DRAWING NUMBER
00448EAB-DC

DRAWN BY	DATE	CHK	SCALE		SIZE
TWV	1-22-20	RYB	NONE	3HEET 2 OF 3	A

THIS COPY IS PROVIDED ON A RESTRICTED BASIS AND IS NOT TO BE USED IN ANY WAY DETRIMENTAL TO THE INTERESTS OF PANDUIT CORP.

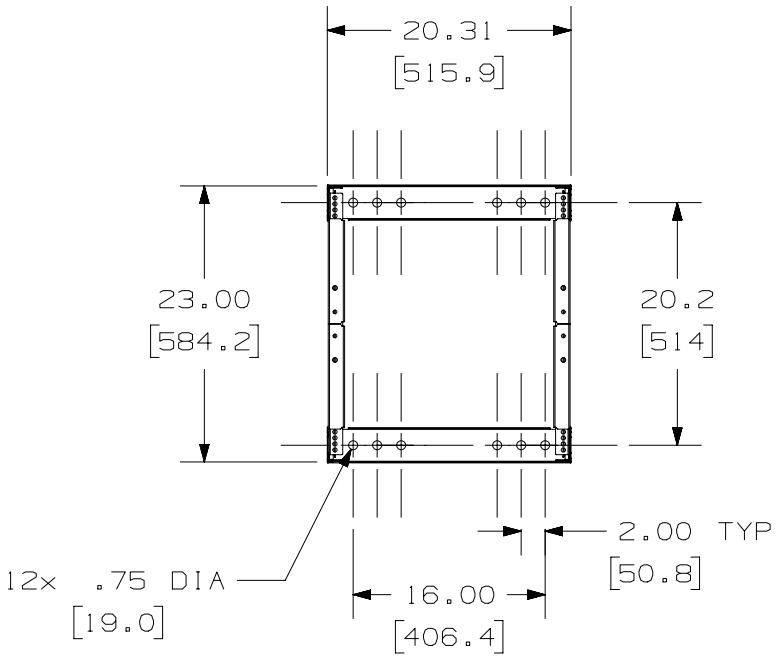

FLOOR FOOTPRINT AT
23" MINIMUM DEPTH

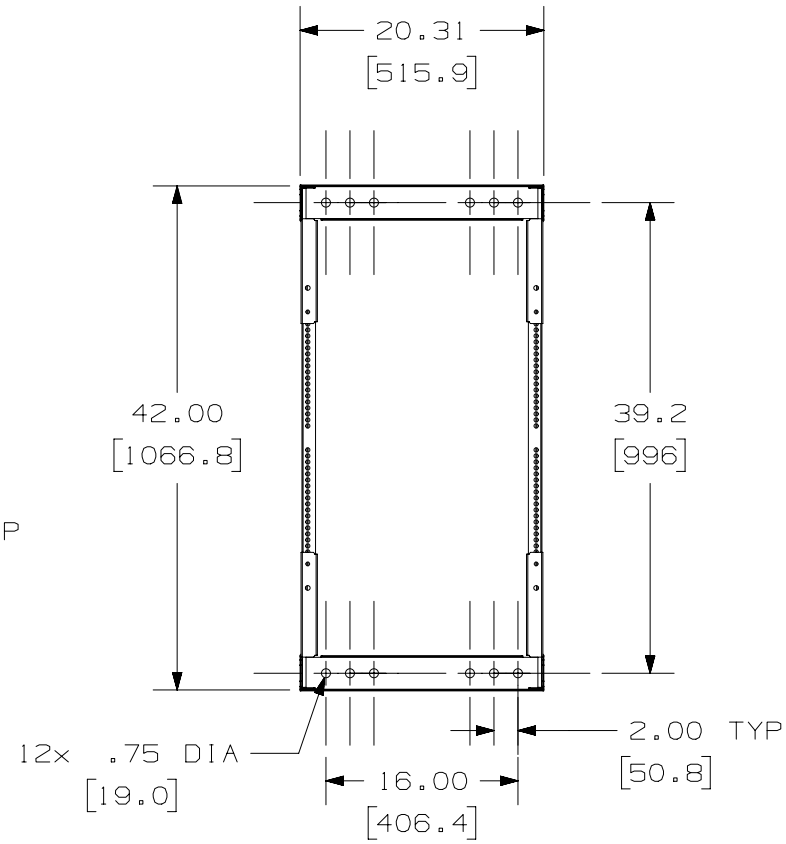

FLOOR FOOTPRINT AT
42" MAXIMUM DEPTH

REV	DATE	BY	CHK	APR	DESCRIPTION	ECN
02C	4-28-23	TWV	MPOL	KCOR	SEE SHEET ONE FOR REVISIONS	M09000ME
02B	2-8-22	TWV	KRKE	JEFK	SEE SHEET ONE FOR REVISIONS	M09000LA/07

A-SIZE CUSTOMER

PART NUMBER
AR4PCN96 / AR4PCN96WH

TITLE
STEEL 4 POST RACK, 52RU CAGE NUT RAILS,
ADJUSTABLE DEPTH FROM 23" TO 42"
CUSTOMER DRAWING

ITEM REVISION NAME
00448EAB/02

DATASET FILE NAME
00448EAB_DC/02C

THIRD ANGLE PROJECTION

MATERIAL
STEEL

DRAWING NUMBER
00448EAB-DC

DRAWN BY	DATE	CHK	SCALE		SIZE
TWV	1-22-20	RYB	NONE	SHEET 3 OF 3	A