THIS COPY IS PROVIDED ON A RESTRICTED BASIS AND IS NOT TO BE USED IN ANY WAY DETRIMENTAL TO THE INTERESTS OF PANDUIT CORP.

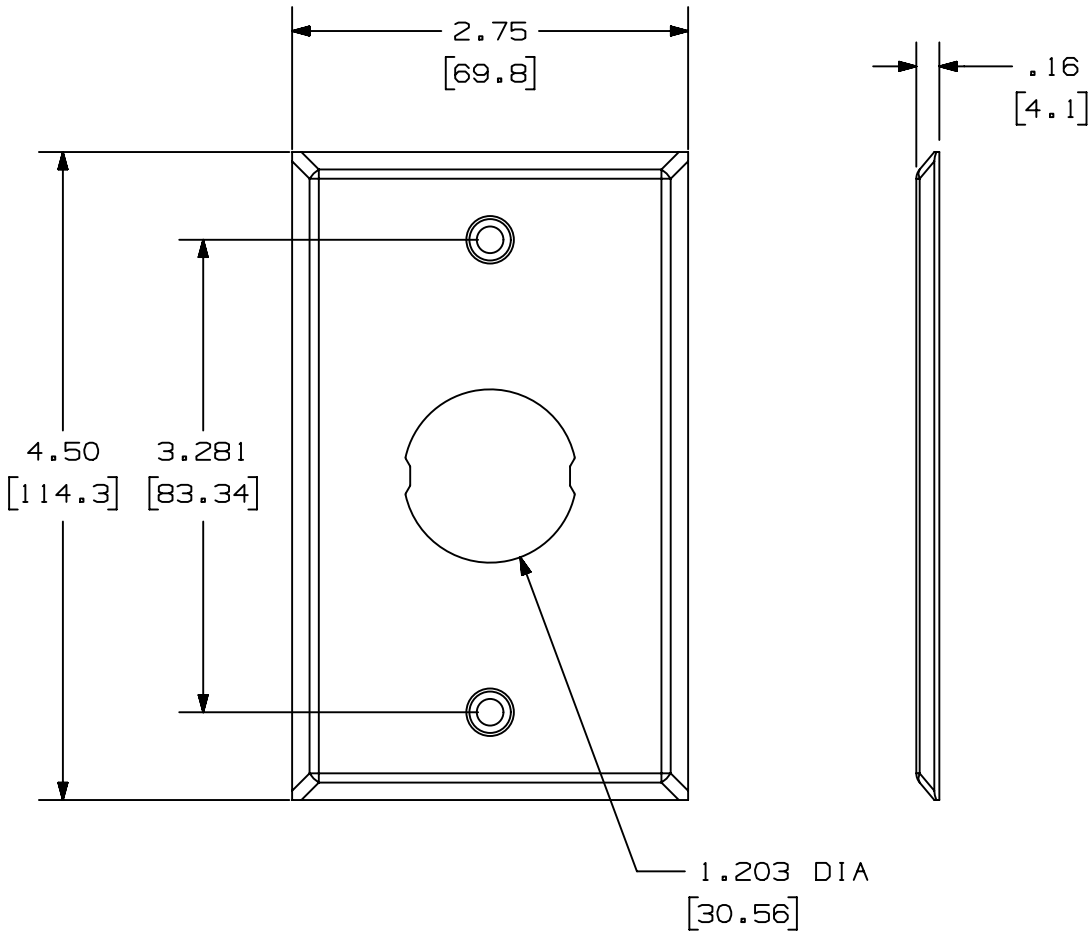

PANDUIT P/N	WEIGHT
IAEFP1	1.22 LB/10 PCS (552.5 g/10 PCS)

NOTES:
1. SEE CURRENT CATALOG FOR ADDITIONAL PART NUMBER SUFFIXES TO INDICATE COLOR AND OR PACKAGE QUANTITY.
2. SEE CATALOG FOR COMPLETE LIST OF PARTS APPLICABLE FOR USE WITH THIS PART.
3. DIMENSIONS IN PARENTHESES ARE IN METRIC.
4. PART INCLUDES:
   2- MOUNTING SCREW WITH RUBBER O-RING
   1- FACEPLATE
   1- FACEPLATE GASKET

PART NUMBER: SEE CHART

TITLE: INDUSTRIALNET 1 POSITION SINGLE GANG FACEPLATE

CUSTOMER DRAWING

ITEM REVISION NAME: M00741LK/00

DATASET FILE NAME: M00741LK_DC/00C

UNLESS OTHERWISE SPECIFIED, DIMENSIONAL TOLERANCES ARE: IN [mm]
.X ± .XXX ± .010 [.3]
.XX ± .03 [.8] ANGLES ±
THIRD ANGLE PROJECTION

MATERIAL: FACEPLATE: 304 S.S GASKET: RUBBER

DRAWING NUMBER: 00741-98

DRAWN BY	DATE	CHK	SCALE	SHT 1 OF 1	SIZE
JSP	6-13-06	JCO	NONE		A

REV	DATE	BY	CHK	APR	DESCRIPTION	ECN
00C	2-15-23	JBO	NAGL	VALJ	REVISED TITLE	00741-98
00B	5-17-14	TA	REFR	REFR	REVISED TITLE BLOCK	00741-98
R	6-13-06	JSP	JCO	JCO	RELEASED TO PRODUCTION	00741-98

D10100DA/14