640 × 480 Full-Color LED Display Unit

Quick Start Guide

Legal Information

About this Document

- This Document includes instructions for using and managing the Product. Pictures, charts, images and all other information hereinafter are for description and explanation only.
- The information contained in the Document is subject to change, without notice, due to firmware updates or other reasons. Please find the latest version of the Document at the Hikvision website (***https://www.hikvision.com***). Unless otherwise agreed, Hangzhou Hikvision Digital Technology Co., Ltd. or its affiliates (hereinafter referred to as "Hikvision") makes no warranties, express or implied.
- Please use the Document with the guidance and assistance of professionals trained in supporting the Product.

About this Product

This product can only enjoy the after-sales service support in the country or region where the purchase is made.

Acknowledgment of Intellectual Property Rights

- Hikvision owns the copyrights and/or patents related to the technology embodied in the Products described in this Document, which may include licenses obtained from third parties.
- Any part of the Document, including text, pictures, graphics, etc., belongs to Hikvision. No part of this Document may be excerpted, copied, translated, or modified in whole or in part by any means without written permission.
- HIKVISION and other Hikvision's trademarks and logos are the properties of Hikvision in various jurisdictions.
- Other trademarks and logos mentioned are the properties of their respective owners.
- HDMI The terms HDMI and HDMI High-Definition Multimedia Interface, and the HDMI Logo are trademarks or registered trademarks of HDMI Licensing Administrator, Inc. in the United States and other countries.

LEGAL DISCLAIMER

- TO THE MAXIMUM EXTENT PERMITTED BY APPLICABLE LAW, THIS DOCUMENT AND THE PRODUCT DESCRIBED, WITH ITS HARDWARE, SOFTWARE AND FIRMWARE, ARE PROVIDED "AS IS" AND "WITH ALL FAULTS AND ERRORS". HIKVISION MAKES NO WARRANTIES, EXPRESS OR IMPLIED, INCLUDING WITHOUT LIMITATION, MERCHANTABILITY, SATISFACTORY QUALITY, OR FITNESS FOR A PARTICULAR PURPOSE. THE USE OF THE PRODUCT BY YOU IS AT YOUR OWN RISK. IN NO EVENT WILL HIKVISION BE LIABLE TO YOU FOR ANY SPECIAL, CONSEQUENTIAL, INCIDENTAL, OR INDIRECT DAMAGES, INCLUDING, AMONG OTHERS, DAMAGES FOR LOSS OF

BUSINESS PROFITS, BUSINESS INTERRUPTION, OR LOSS OF DATA, CORRUPTION OF SYSTEMS, OR LOSS OF DOCUMENTATION, WHETHER BASED ON BREACH OF CONTRACT, TORT (INCLUDING NEGLIGENCE), PRODUCT LIABILITY, OR OTHERWISE, IN CONNECTION WITH THE USE OF THE PRODUCT, EVEN IF HIKVISION HAS BEEN ADVISED OF THE POSSIBILITY OF SUCH DAMAGES OR LOSS.

- YOU ACKNOWLEDGE THAT THE NATURE OF THE INTERNET PROVIDES FOR INHERENT SECURITY RISKS, AND HIKVISION SHALL NOT TAKE ANY RESPONSIBILITIES FOR ABNORMAL OPERATION, PRIVACY LEAKAGE OR OTHER DAMAGES RESULTING FROM CYBER-ATTACK, HACKER ATTACK, VIRUS INFECTION, OR OTHER INTERNET SECURITY RISKS; HOWEVER, HIKVISION WILL PROVIDE TIMELY TECHNICAL SUPPORT IF REQUIRED.
- YOU AGREE TO USE THIS PRODUCT IN COMPLIANCE WITH ALL APPLICABLE LAWS, AND YOU ARE SOLELY RESPONSIBLE FOR ENSURING THAT YOUR USE CONFORMS TO THE APPLICABLE LAW. ESPECIALLY, YOU ARE RESPONSIBLE, FOR USING THIS PRODUCT IN A MANNER THAT DOES NOT INFRINGE ON THE RIGHTS OF THIRD PARTIES, INCLUDING WITHOUT LIMITATION, RIGHTS OF PUBLICITY, INTELLECTUAL PROPERTY RIGHTS, OR DATA PROTECTION AND OTHER PRIVACY RIGHTS. YOU SHALL NOT USE THIS PRODUCT FOR ANY PROHIBITED END-USES, INCLUDING THE DEVELOPMENT OR PRODUCTION OF WEAPONS OF MASS DESTRUCTION, THE DEVELOPMENT OR PRODUCTION OF CHEMICAL OR BIOLOGICAL WEAPONS, ANY ACTIVITIES IN THE CONTEXT RELATED TO ANY NUCLEAR EXPLOSIVE OR UNSAFE NUCLEAR FUEL-CYCLE, OR IN SUPPORT OF HUMAN RIGHTS ABUSES.
- IN THE EVENT OF ANY CONFLICTS BETWEEN THIS DOCUMENT AND THE APPLICABLE LAW, THE LATTER PREVAILS.

© Hangzhou Hikvision Digital Technology Co., Ltd. All rights reserved.

Regulatory Information

EU/UK Compliance Statement

This product and - if applicable - the supplied accessories too are marked with "CE" and comply therefore with the applicable harmonized European standards listed under the Directive 2014/30/EU (EMCD) and Directive 2011/65/EU (RoHS).

Note: The products with the input voltage of within 50 to 1000 VAC or 75 to 1500 VDC comply with Directive 2014/35/EU (LVD), and the rest products comply with Directive 2001/95/EC (GPSD). Please check the specific power supply information for reference.

The full text of the EU declaration of conformity is available at the following internet address: https://www.hikvision.com/en/support/compliance/declaration-of-conformity.

This product and - if applicable - the supplied accessories too are marked with "UKCA" and comply therefore with the following directives: Electromagnetic Compatibility Regulations 2016, Electrical Equipment (Safety) Regulations 2016, the Restriction of the Use of Certain Hazardous Substances in Electrical and Electronic Equipment Regulations 2012.

Warning: This is a class A product. In a domestic environment this product may cause radio interference, in which case, the user may be required to take adequate measures.

Directive 2012/19/EU (WEEE Directive): Products marked with this symbol cannot be disposed of as unsorted municipal waste in the European Union. For proper recycling, return this product to your local supplier upon the purchase of equivalent new equipment, or dispose of it at designated collection points. For more information, see: www.recyclethis.info.

According to the Waste Electrical and Electronic Equipment Regulations 2013: Products marked with this symbol cannot be disposed of as unsorted municipal waste in the United Kingdom. For proper recycling, return this product to your local supplier upon the purchase of equivalent new equipment, or dispose of it at designated collection points. For more information, see: www.recyclethis.info.

Directive 2006/66/EC and its amendment 2013/56/EU (Battery Directive): This product contains a battery that cannot be disposed of as unsorted municipal waste in the European Union. See the product documentation for specific battery information. The battery is marked with this symbol, which may include lettering to indicate cadmium (Cd), lead (Pb), or mercury (Hg). For proper recycling, return the battery to your supplier or to a designated collection point. For more information, see: www.recyclethis.info.

According to the Batteries and Accumulators (Placing on the Market) Regulations 2008 and the Waste Batteries and Accumulators Regulations 2009: This product contains a battery that cannot be disposed of as unsorted municipal waste in the United Kingdom. See the product documentation for specific battery information. The battery is marked with this symbol, which may include lettering to indicate cadmium (Cd), lead (Pb), or mercury (Hg). For proper recycling, return the battery to your supplier or to a designated collection point. For more information, see: www.recyclethis.info.

Preface

Applicable Models

This guide is applicable to full-color LED display units.

Symbol Conventions

The symbols that may be found in this document are defined as follows.

Symbol	Description
Note	Provides additional information to emphasize or supplement important points of the main text.
Caution	Indicates a potentially hazardous situation, which if not avoided, could result in equipment damage, data loss, performance degradation, or unexpected results.
Danger	Indicates a hazard with a high level of risk, which if not avoided, will result in death or serious injury.

Safety Instructions

Caution

- To reduce the risk of fire or electric shock, please do not expose the device to rain or humid environment.
- The device may generate radio interference in indoor environment. Necessary precautions may be required.
- Electric discharge may last for a short period of time after the power is shut down. Please wait two minutes after the power is shut down before operating the device.
- To avoid the risk of electric shock, please do not operate when the power is on.
- Please do not plug and unplug the power cable when the power is on.
- The device is only suitable for installation on the concrete or non-flammable surfaces, to prevent molten material from dripping to the bottom during fire caused by internal failure.
- Keep 90 degrees when moving and using the device.
- Do not place anything containing liquid on the device to avoid the risk of fire or electric shock caused by liquid-splashing.
- Install the device no more than 5 mm away from the wall or other metal racks in case of lamp board drop resulting in electric shock.

- After installation, there should be no openings around the LED module. The bottom bracket under the wire outlet position should completely cover the bottom hole only to let the wire out, to prevent the molten material from dripping to the bottom during fire caused by internal failure.
- To ensure safety, the installation parts and the wall should support four times the weight of the device.

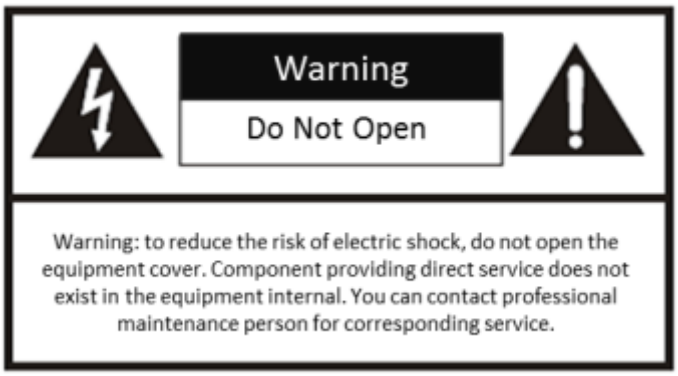

Warning

- In the use of the product, you must be in strict compliance with the electrical safety regulations of the nation and region.
- The device shall not be exposed to water dripping or splashing, and no objects filled with liquids, such as vases, shall be placed on the device.
- Provide a surge suppressor at the inlet opening of the device under special conditions such as the mountain top, iron tower, and forest.
- Do not touch the bare components (such as the metal contacts of the inlets) and wait for at least 5 minutes, since electricity may still exist after the device is powered off.
- Ensure correct voltage and wiring of the terminals for connection to mains supply.
- + identifies the positive terminals of the device which is used with, or generates direct current, and - identifies the negative terminal(s) of the device which is used with, or generates direct current.
- No naked flame sources, such as lighted candles, should be placed on the device.
- Install the device according to the instructions in Quick Start Guide.
- To prevent injury, this device must be securely attached to the installation surface in accordance with the installation instructions.
- Never place the device in an unstable location. The device may fall, causing serious personal injury or death.
- The additional force shall be equal to three times the weight of the device but not less than 50 N. The device and its associated mounting means shall remain secure during the installation. After the installation, the device, including any associated mounting plate, shall not be damaged.
- The interface varies with the models. Please refer to the product datasheet for details.

- If the device needs to be wired by yourself, select the corresponding wire to supply power according to the electric parameters labeled on the device. Strip off wire with a standard wire stripper at corresponding position. To avoid serious consequences, the length of stripped wire shall be appropriate, and conductors shall not be exposed.
- Make sure that the power has been disconnected before you wire, install, or disassemble the device.
- The equipment has been designed, when required, modified for connection to an IT power distribution system.
- NEVER place items that might tempt children to climb, such as toys and remote controls, on the top of the equipment.
- CAUTION: This bracket is intended for use only with LED display unit. Use with other equipment may result in instability causing injury.
- This device is suitable for mounting on concrete or other non-combustible surface only to avoid fire hazard.
- The power supply or device must be connected to an earthed mains socket-outlet.
- High voltage for the power supply. Do not disassemble it.
- An all-pole mains switch shall be incorporated in the electrical installation of the building.
- A readily accessible disconnect device shall be incorporated external to the equipment, rated 220/230/240 VAC, 6A for each device. A single device is recommended for AC 220 V/ 230 V/ 240 V, 6 A circuit breakers. When multiple devices are superimposed, a suitable circuit breaker should be selected according to the total rated current, but it must not exceed the building equipped circuit specifications.
- CAUTION: This device is for use only with LED bracket. Use with other (carts, stands, or carriers) may result in instability causing injury.
- The device external wiring connected to the hazardous live terminals requires installation by an instructed person.
- The protective grounding of the device should be reliably connected to the building protective grounding.
- To reduce the risk of electric shock, install protective shield on the exposed connector after installing LED screen.
- Disconnect the power plug before installing the protective shield.
- Disconnect the power plug before maintenance.
- Make sure the power supply is well-grounded.
- The external wire connection between device and hazardous electronic terminals should be operated by professionals.
- To prevent injury, the device must be securely fixed to the ground, wall, ceiling, or steel frame. The all-in-one rack should be fixed to the ground with expansion screws.
- The supporting rack can only be used with the device. Using it with other devices may cause instability and injury.

- The device can only be used with the supporting rack. Using it with other equipment (such as a cart, shelf, or handling device) may cause instability and injury.
- This is a class A product and may cause radio interference in which case the user may be required to take adequate measures.
- If the device is not released with a power adapter, and you need to wire the bare cables of the device:
- The device external wiring connected to the hazardous live terminals requires installation by an instructed person.
- If smoke, odor, or noise arises from the power supply or device, immediately turn off the power, unplug the power cable, and contact the service center.
- If the device needs to be wired by yourself, select the corresponding wire to supply power according to the electric parameters labeled on the device. Strip off wire with a standard wire stripper at corresponding position. To avoid serious consequences, the length of stripped wire shall be appropriate, and conductors shall not be exposed.

TABLE OF CONTENTS

Chapter 1 Product Introduction 1
1.1 Overview 1
1.2 Product Components 1
Chapter 2 Rack Installation 2
2.1 About Rack 2
2.2 Install the Rack 2
2.2.1 Precautions 2
2.2.2 Install the Wall-Mounted Rack 2
2.2.3 Install the All-in-One Rack 6
2.2.4 Install the Modular Wall-Mounted Bracket 18
Chapter 3 Cabinet Installation 28
3.1 Introduction 28
3.1.1 About Cabinet 28
3.1.2 Load Capability of Cabinet 28
3.2 Install Cabinet 29
3.2.1 Precautions 29
3.2.2 Stitch Cabinet Frames 29
3.2.3 Stitch Lamp Boards 32
3.2.4 Adjust Lamp Boards on the Cabinets Horizontally 35
3.2.5 Install Protective Shield 36
Chapter 4 Software Debugging 37

Chapter 1 Product Introduction

1.1 Overview

A full-color LED display unit (hereinafter referred to as the device, the product, or the LED) is a large display panel that uses an array of light-emitting diodes as dot matrix modules or pixels for information display. It has a very small pixel pitch, which indicates the shortest distance between the centers of two pixels, helping to realize the nearly seamless splicing of screens. With clear and vivid visual presentation of colors, stable performance, long service life, strong adaptability, and cost-effective, the full-color LED display unit can be widely applied to scenarios such as radio and television broadcasting, video surveillance, conference display, and information display.

1.2 Product Components

An LED control system includes sending and receiving cards. The sending card packages images and sends them to the receiving card. The receiving card unpackages and processes the images, and then displays the images on the LED display unit.

Chapter 2 Rack Installation

2.1 About Rack

There are two types of racks for installing our full-color LED products: all-in-one rack and wall-mounted rack. The wall-mounted rack is used for installing front-maintenance cabinets only. The all-in-one rack can be used for installing front-maintenance cabinets and back-maintenance cabinets.

2.2 Install the Rack

2.2.1 Precautions

- Installation personnel must wear protective gear.
- Take safety measures when working at heights.
- Make sure that the rack is mounted vertically to the flat ground without tilting or twisting.
- Check that all structural parts and fasteners are fully mounted without missing.
- After all the accessories are mounted, clean all the metal debris in the rack.

2.2.2 Install the Wall-Mounted Rack

Install the Base Frame

Use expansion bolts to fix the base frame onto the wall to keep the base frame level.

Figure 2-1 Fix the Base Frame

Install the Rack Frame

Put the rack frame on the base frame and use expansion bolts with 10 × 110 mm to fix rack frame and base frame onto the wall. Install the rack frames one by one and ensure that the rack frames are vertical to the ground.

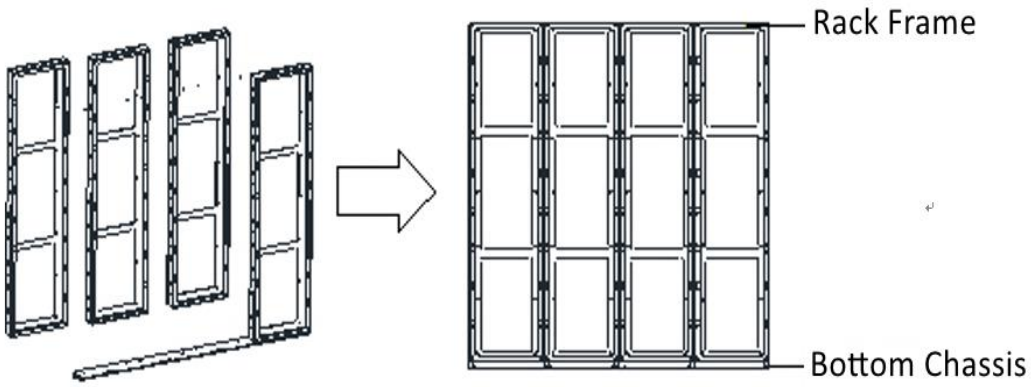

Figure 2-2 Assemble the Wall-Mounted Rack

Install Front-Maintenance Cabinets

Steps

1. Install the mounting screws through the holes on the front of the cabinet and lock with the floating nuts on the bracket frame.

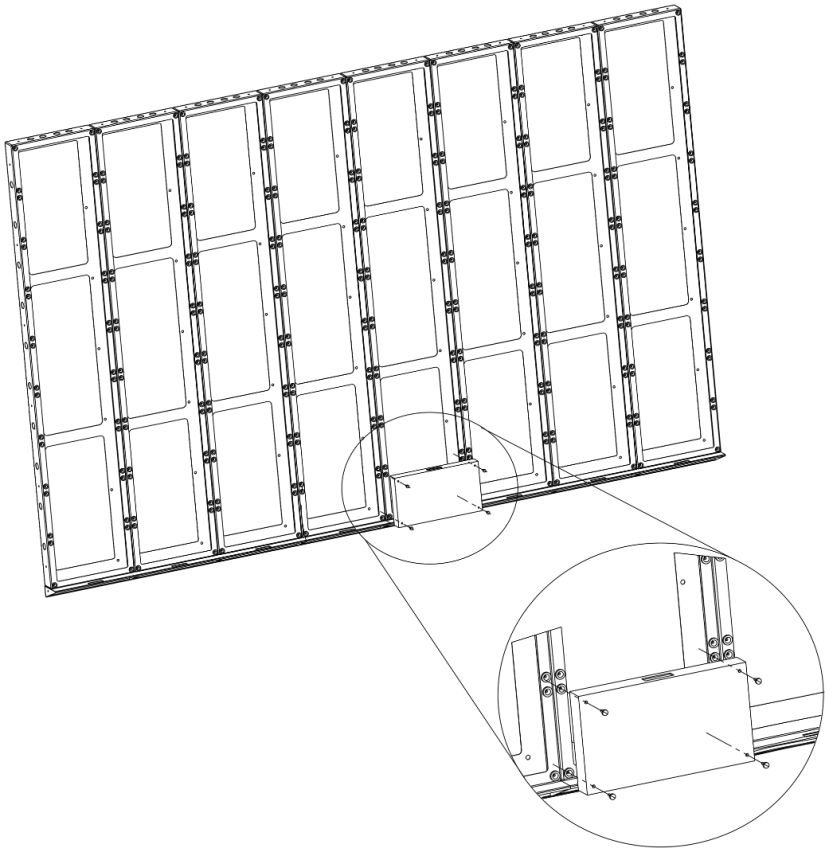

Figure 2-3 Fix the Screen

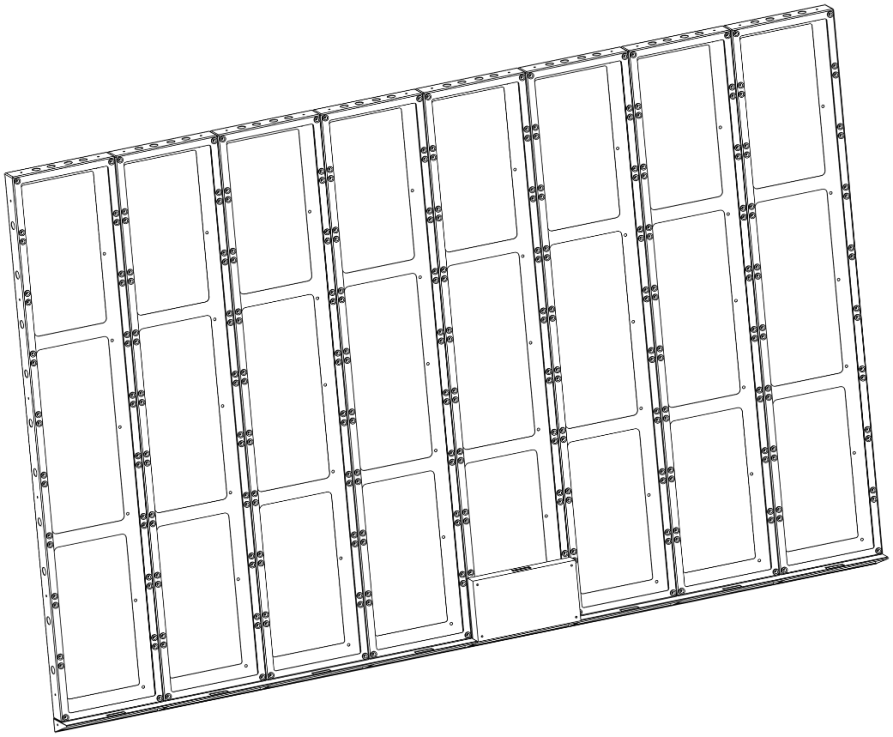

Figure 2-4 Screen Fixed

2. Install the cabinets from the center to both sides until cabinets of the first row installed.

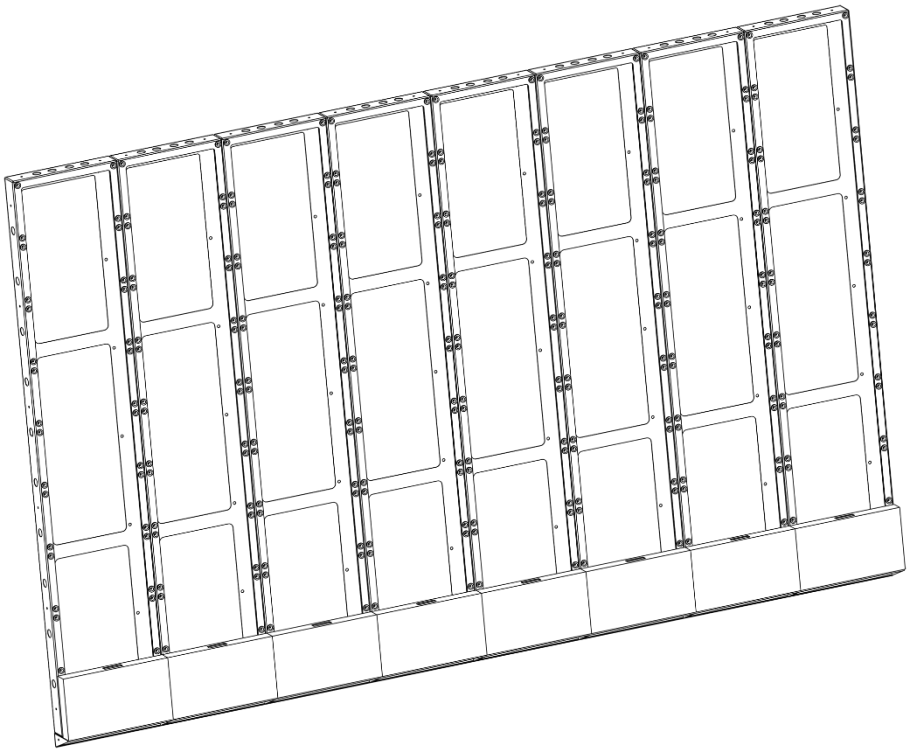

Figure 2-5 Screens Fixed

3. Install the cabinets in the above rows from bottom to top and use a level to measure and ensure that the cabinets are flat and vertical after installation.

Note

- Do not fix the screws between the connectors and cabinets too tight for future adjustments.
- Pay attention to the leveling of frames and front lamp boards also need to be fine-tuned according to the actual situation to ensure that lamp boards are adjusted horizontally and seams are even and the joint distance is within the required range.

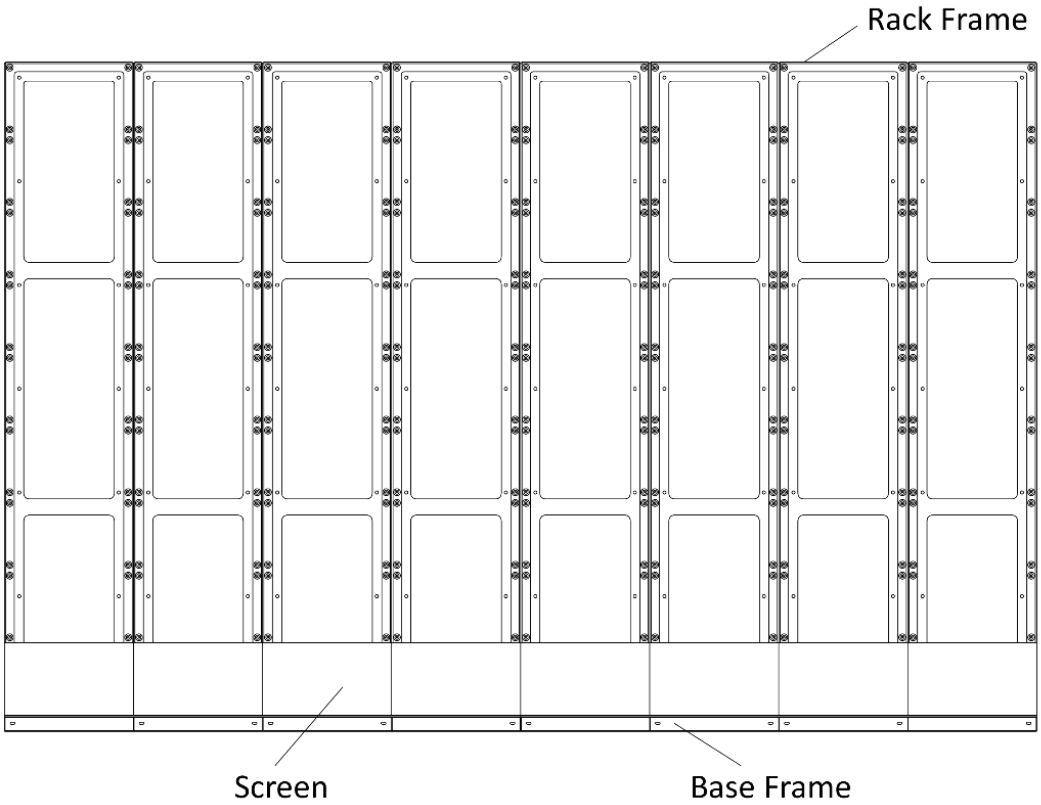

Figure 2-6 Screens of the First Row Fixed

Note

- For details about cabinet stitching, see 3.2.2 Stitch Cabinet Frames.
- For details about lamp boards installation, see 3.2.3 Stitch Lamp Boards.

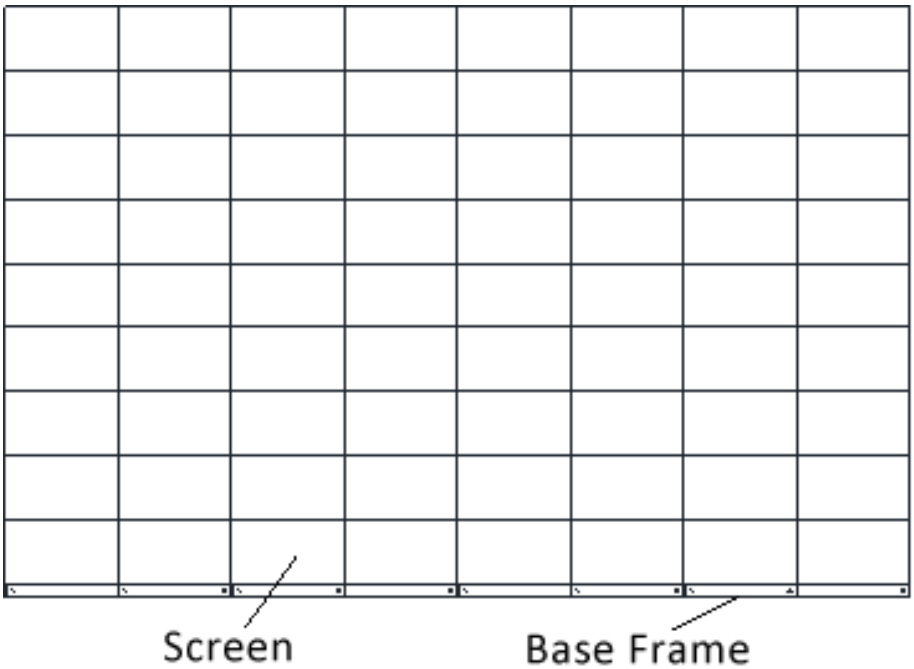

Figure 2-7 Screen Installation Finished

Note

- Install the device no more than 5 mm away from the wall or other metal racks in case of lamp board drop resulting in electric shock.
- After installation, there should be no openings around the LED module. The bottom bracket under the wire outlet position should completely cover the bottom hole only to let the wire out, to prevent the molten material from dripping to the bottom during fire caused by internal failure.
- To ensure safety, the installation parts and the wall should support four times the weight of the device.

2.2.3 Install the All-in-One Rack

Install the Bottom Chassis

Steps

1. Fix the anchor bolts to the bottom chassis and stitch the bottom chassis.

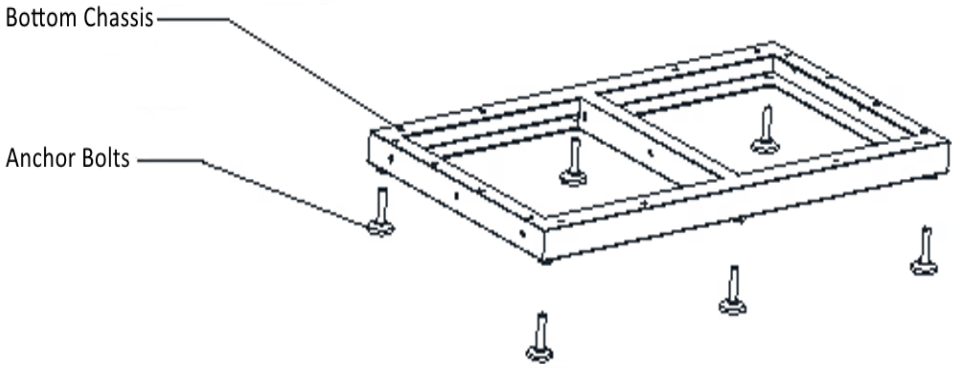

Figure 2-8 Stitch the Bottom Chassis

2. Level the bottom chassis and then tighten the bolts.

Figure 2-9 Level the Bottom Chassis

Note

If you want to fix the all-in-one rack, insert 10 × 110 mm expansion bolts to fasten the rack frame.

Install the Rack Frame and Base Frame

Steps

1. Position the rack frame into the bottom chassis and then fasten the rack frame.

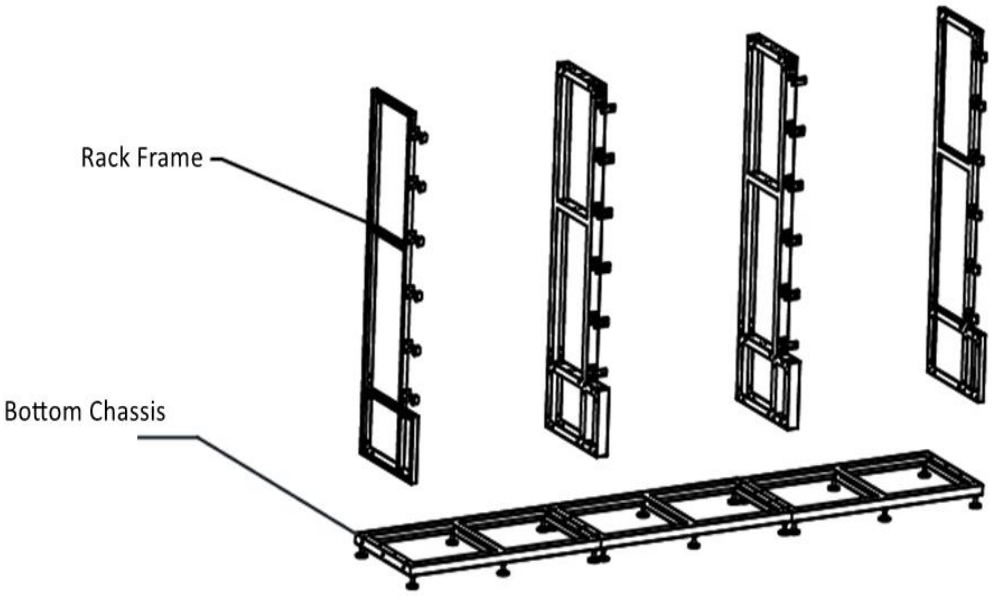

Figure 2-10 Fix the All-in-One Rack Frame

2. Fasten the bottom base frame into the bottom chassis and rack frame respectively.

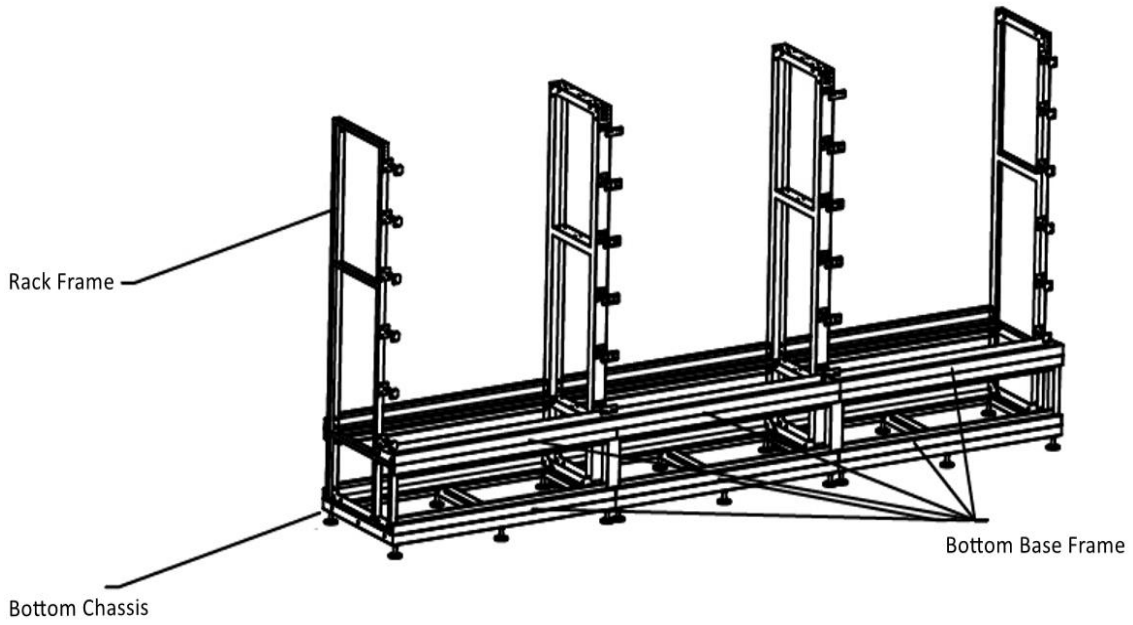

Figure 2-11 Fix the Bottom Base Frame

3. Connect the top base frame with rack frame and tighten the bolts.

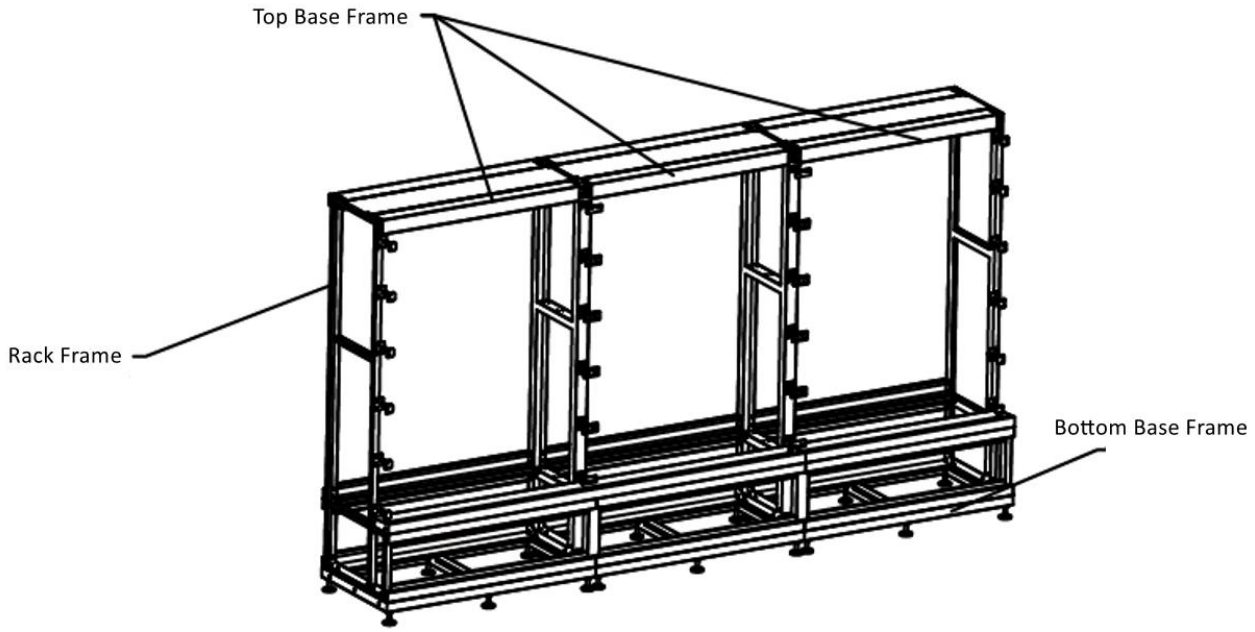

Figure 2-12 Fix the Top Base Frame

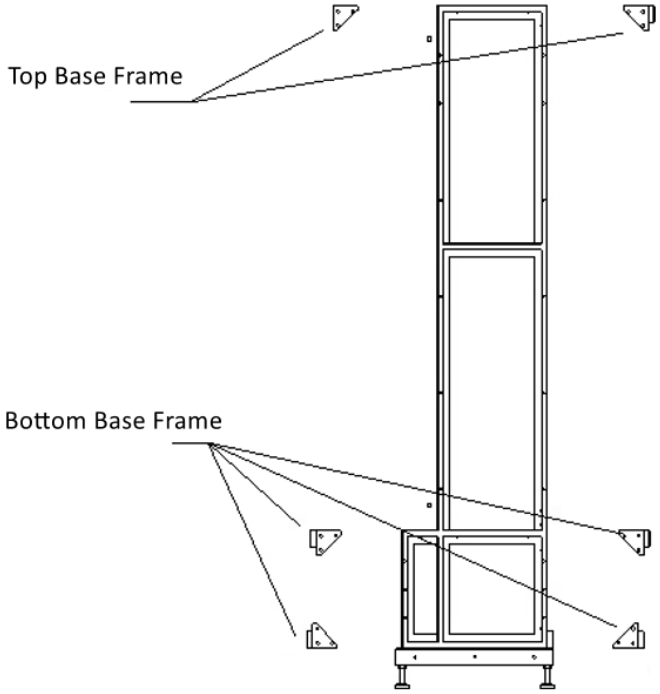

Figure 2-13 Side View of Base Frames Installation (Top and Bottom)

Install the Bottom Filler Strip

Steps

1. Connect the filler strips with the rack frames according to the length and fix with the screws.
2. Tighten the screws after the installation is flush.

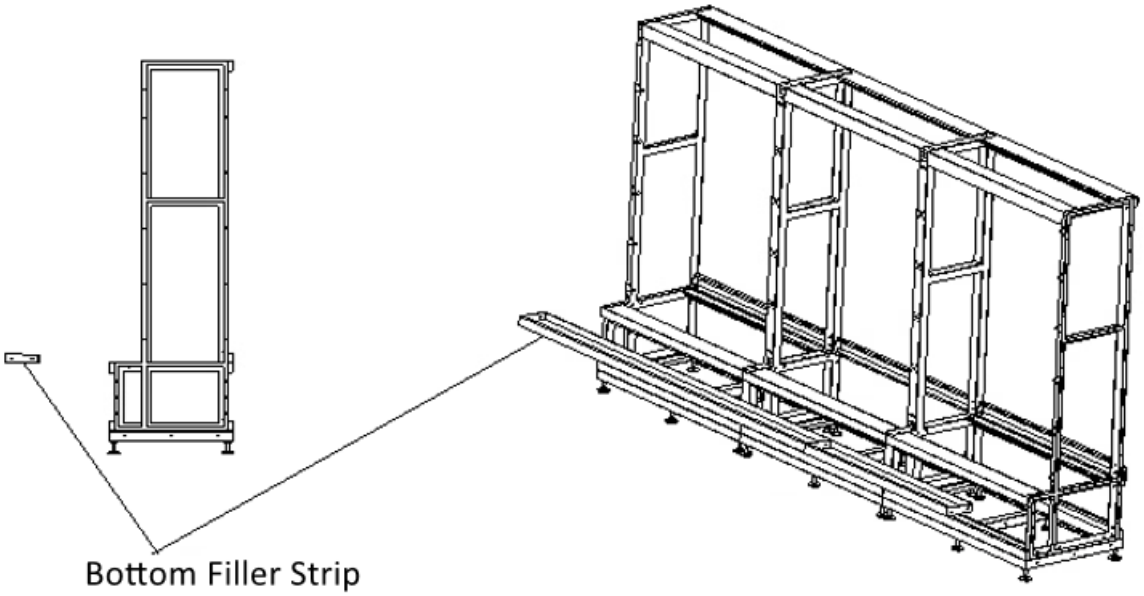

Figure 2-14 Install the Bottom Filler Strip

Install the Connectors

Connector can be divided into three types: left and right, top and bottom, central connectors.

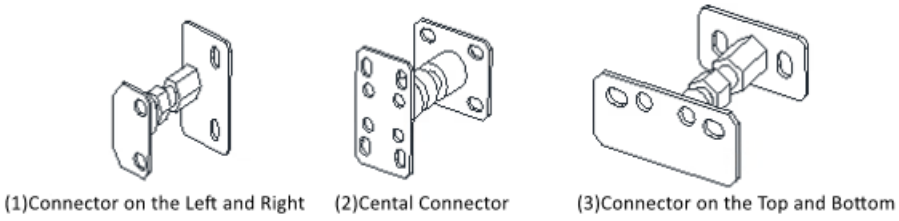

Figure 2-15 Connectors

Steps

1. Install the connectors on the rack frames according to the corresponding position.
   - The left and right connectors are installed on the both sides of the rack frames.
   - The central connectors are installed in the middle of the rack frames.
   - The top and bottom connectors are installed on the both ends of the central rack frames.

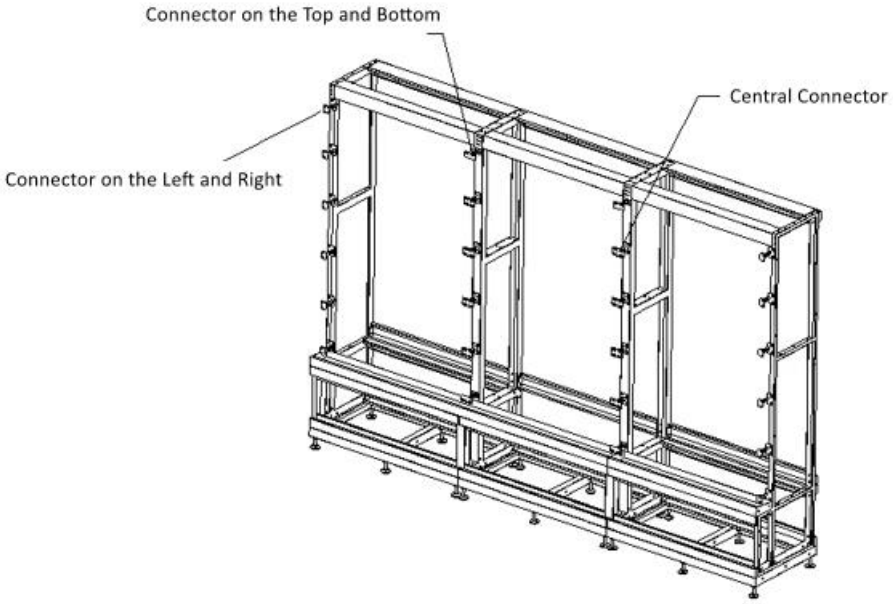

Figure 2-16 Install the Connectors

2. Use screws to connect rack frames and connectors and tighten the screws.

Install the Screen

Steps

1. After the rack frames are installed, use a lifting hammer to measure whether each part is vertical or not and ensure that those are on the same level.
2. Fasten the connectors on the vertical rack frames of the screen in accordance with the

requirement of locating size of the cabinet installation.

3. The screen adjacent to the connector is threaded through the connector using screws and secured to the fixing holes on the back of the screen. The screens that are not connected to the connectors are fixed with joint pieces.

Note

- The screens should be fixed from the bottom to top and from the middle to both sides.
- The screen should be concave 3 mm inward than the lower fill strip.

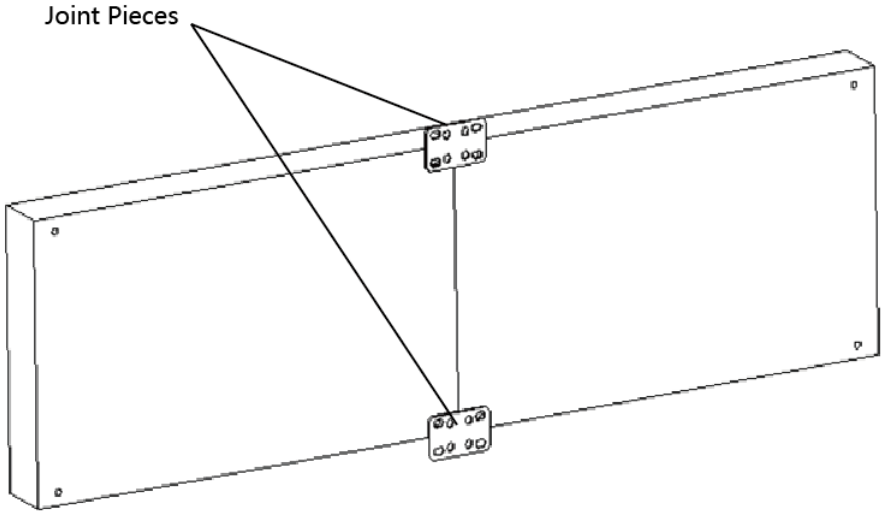

Figure 2-17 Fix the Screen with the Joint Pieces

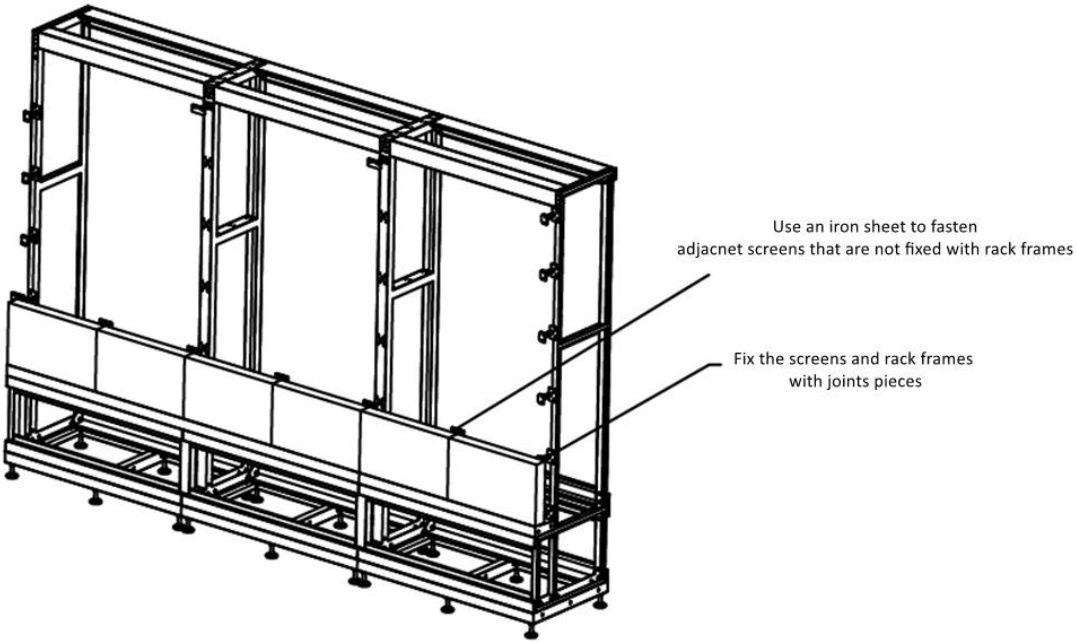

Figure 2-18 Lower Screen Installed

4. Install the first cabinet from the lower middle part. Use a level to measure and ensure that the cabinets are flat and vertical. Level and secure the cabinet to the connectors on the rack frame. For the screens do not have connectors near the rear, use joint pieces to fix.

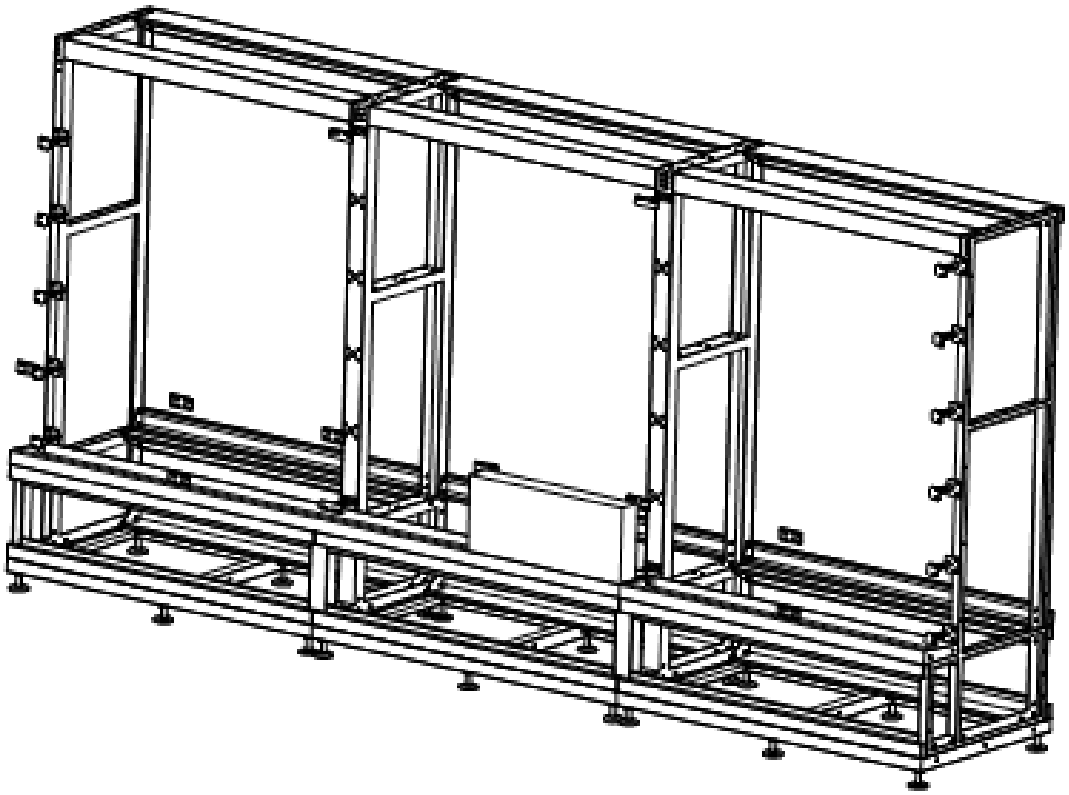

Figure 2-19 Install the Screen in the Middle of the Rack Frame

Note

- Do not fix the screws between the connectors and cabinets too tight for future adjustment.
- In normal cases, you should lock out LED lamp boards after they are adjusted horizontally and vertically because the boards will probably be moved during the installation of other lamp boards.
- Ensure that the screen is flat and without evident gap. Otherwise, make some adjustments.

5. Install the cabinets from the middle to the sides to finish the installation of cabinet in the first row.

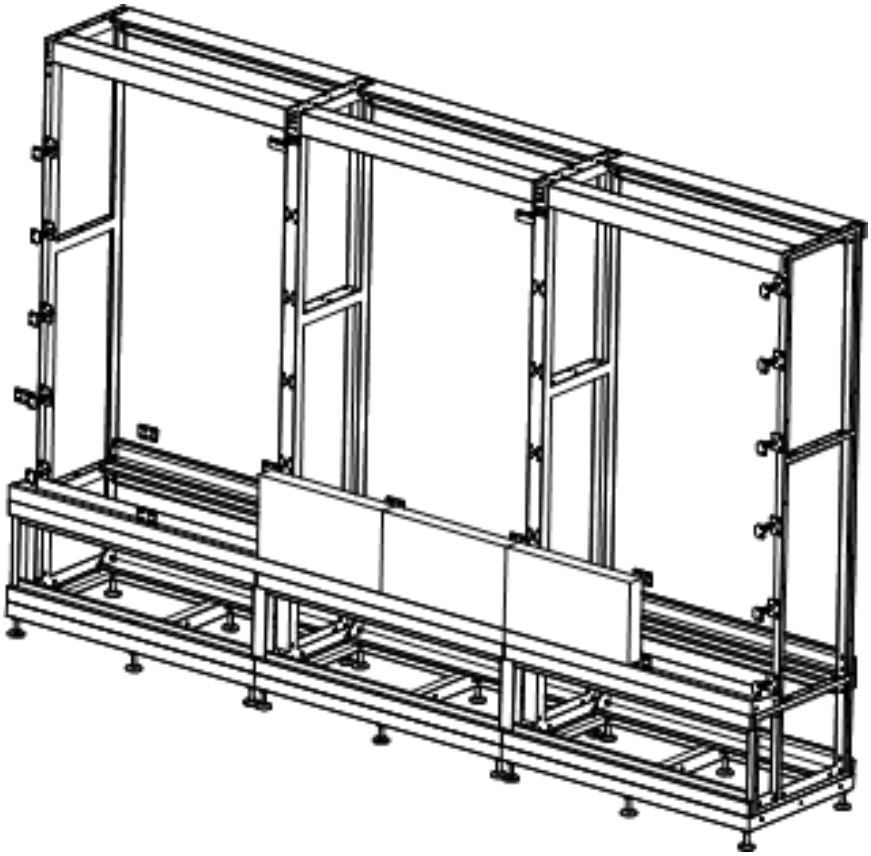

Figure 2-20 Install the Screen from the Middle to Both Sides

6. Use a level to measure and ensure that the cabinets are flat and vertical.

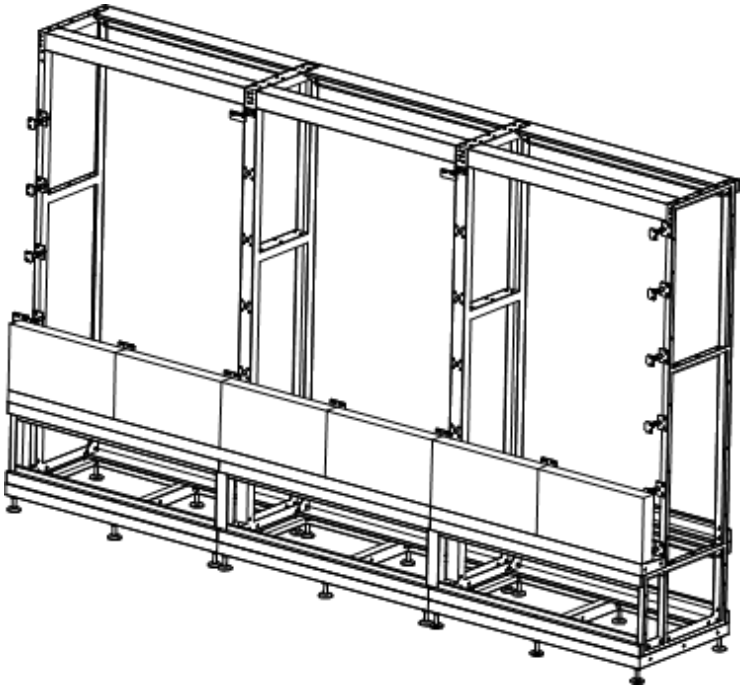

Figure 2-21 Fix the Screens

Note

When there is a deviation in height, simply place a thin iron sheet under the bottom. Do not try to resolve the deviation by hitting the cabinets on the top because it will result in larger deviation later.

7. Repeat the above steps to complete the installation of other cabinets.

Ensure that all the cabinets are flat and vertical and the seams between the cabinets are even. Then tighten the anchor bolts to complete the installation.

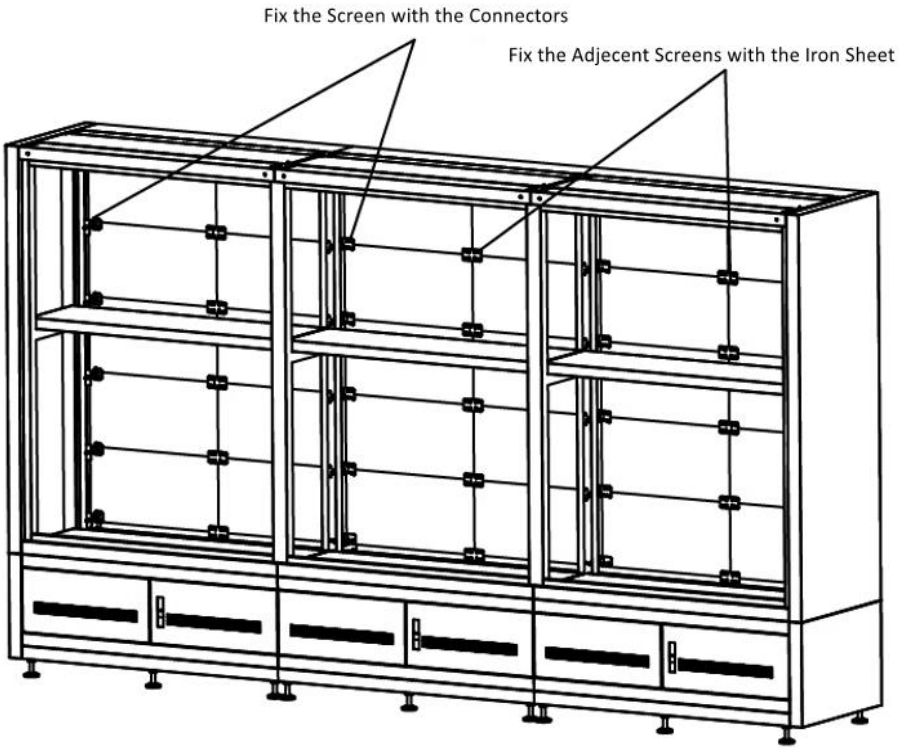

Figure 2-22 Fix the Screen

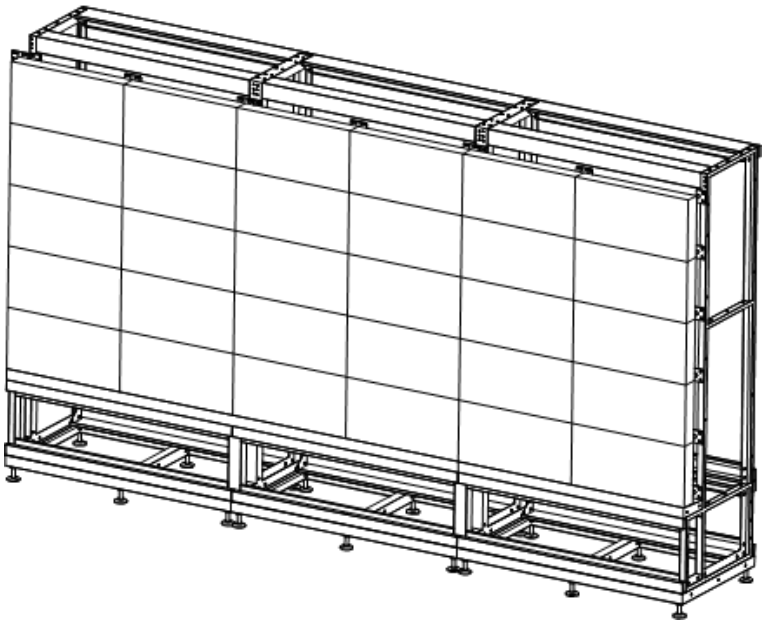

Figure 2-23 Screen Installation Finished

Note

- For details about cabinet stitching, see ***Stitch Cabinet Frames***.
- For details about lamp board installation, see ***Install Lamp Boards on the Cabinets***.

Install the Top Filler Strip

Steps

1. Connect the filler strips with the rack frames according to their length and fix them with screws.
2. Tighten the screws after the installation is level.

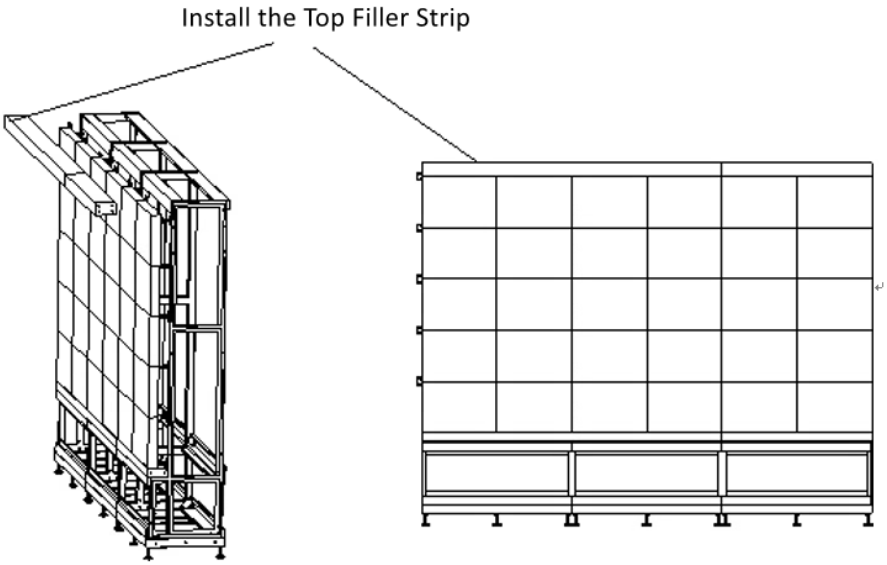

Figure 2-24 Install the Top Filler Strip

Install the Aisle Pedals (for Large-scale Projects)

Steps

1. Put the aisle pedals on the middle of the rack frames.
2. Use the screws to connect the aisle pedals with the rack frames and then tighten the screws.

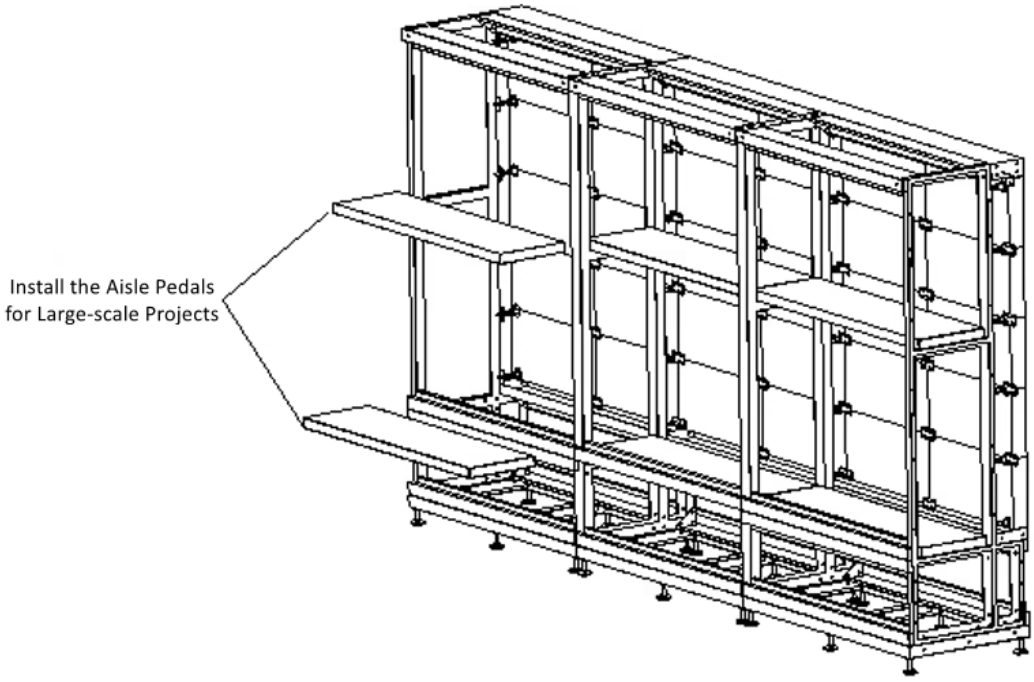

Figure 2-25 Fix the Aisle Pedals

Note

If the splicing scale of the screen is too high, install the aisle pedals first for the convenience of screen installation.

Install the Cover Plates

Install the left cover plates, right cover plates, front cover plates, back cover plates, and top cover plates respectively.

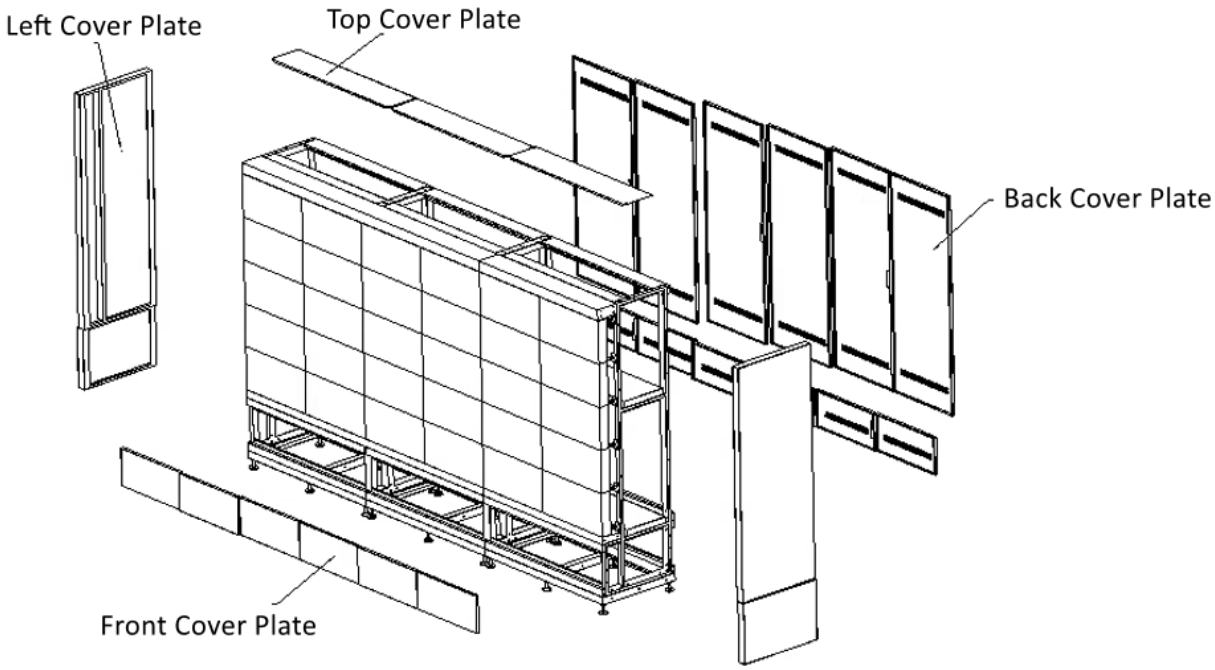

Figure 2-26 Fix the Cover Plates

The figure shows as follows after the installation is finished.

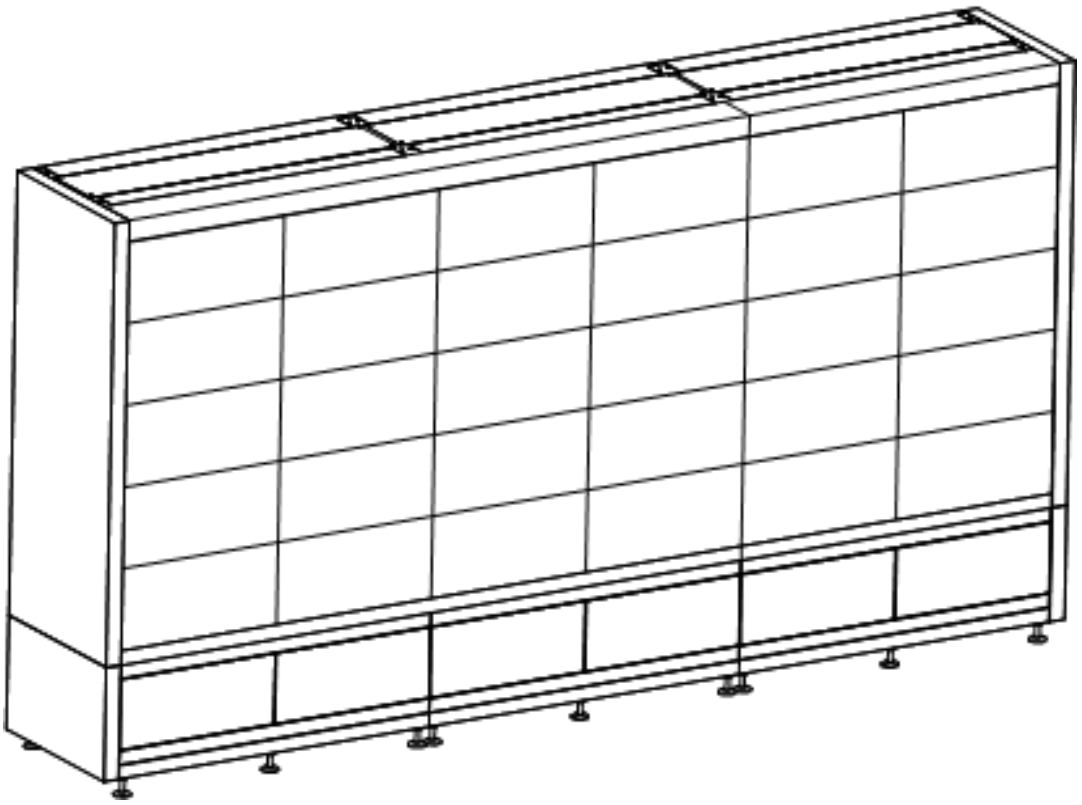

Figure 2-27 Screen Installation Finished

Note

- Install the device no more than 5 mm away from the wall or other metal racks in case of lamp board drop resulting in electric shock.
- The all-in-one rack should be fixed to the ground with expansion screws.
- The device is only suitable for installation on the concrete or non-flammable surfaces, to prevent molten material from dripping to the bottom during fire caused by internal failure.

2.2.4 Install the Modular Wall-Mounted Bracket

Accessories

1. Allen Wrench: Used for connecting the stator and cabinet with Allen screws.

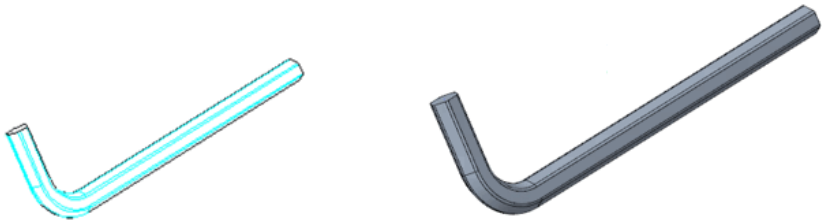

Figure 2-28 Allen Wrench

2. Combination Wrench: Used for T-shape screws.

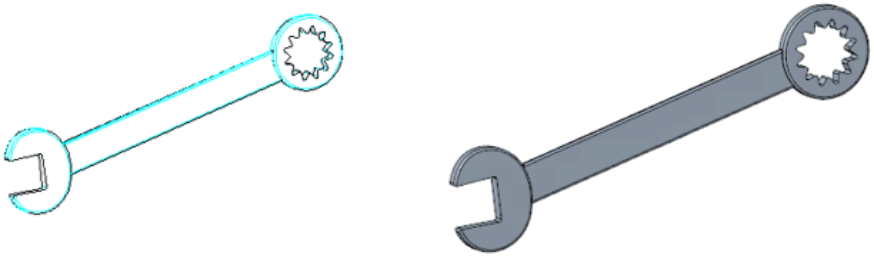

Figure 2-29 Combination Wrench

3. Connector: Used for fixing position and avoiding displacement of cabinet frames.

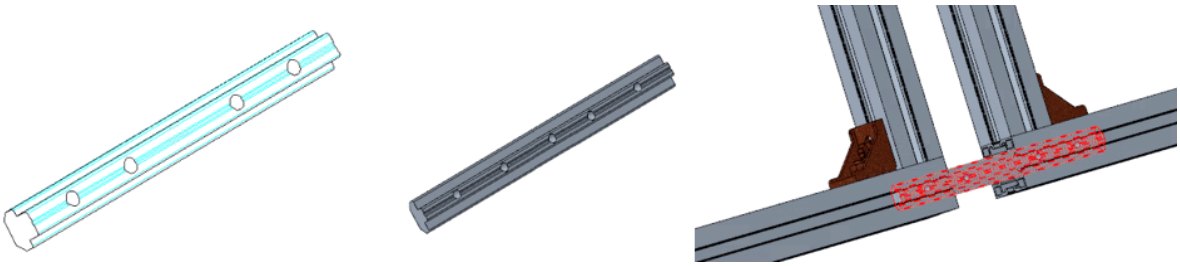

Figure 2-30 Connector

4. Four cabinet fixing pieces (fixation pieces): Fix the cabinet in the middle of the 2 × 2 frame; As a temporary tray when you mount the first row cabinet to avoid falling of the first line.

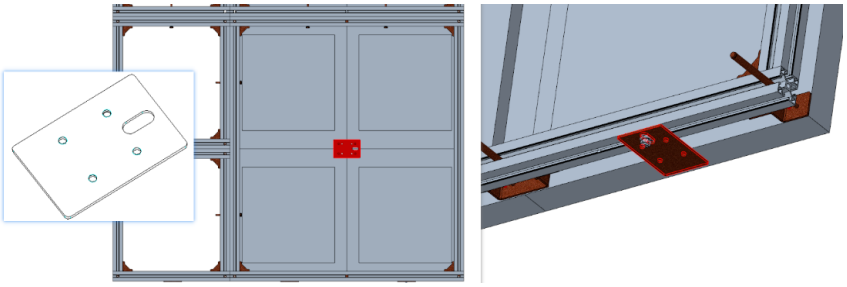

Figure 2-31 Four Cabinet Fixing Piece

5. Two-point cabinet fixing piece (Middle fixed piece): Fasten the cabinet to the cabinet.

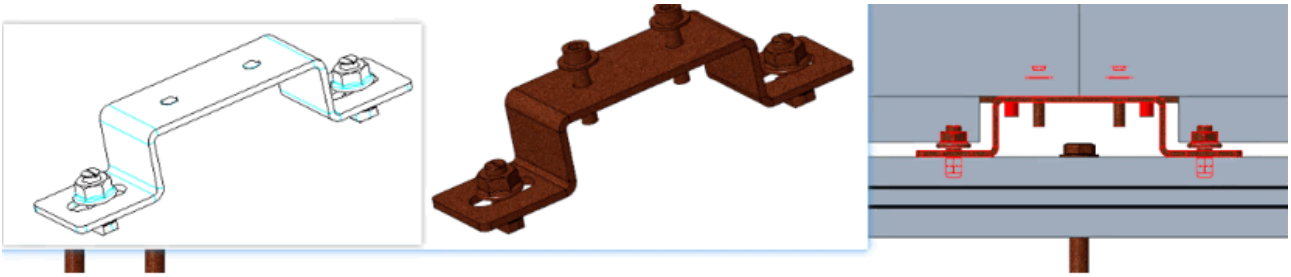

Figure 2-32 Two-point Cabinet Fixing Piece

6. Single-point cabinet fixing piece (Corner fixed piece): Fasten the cabinet to the frame.

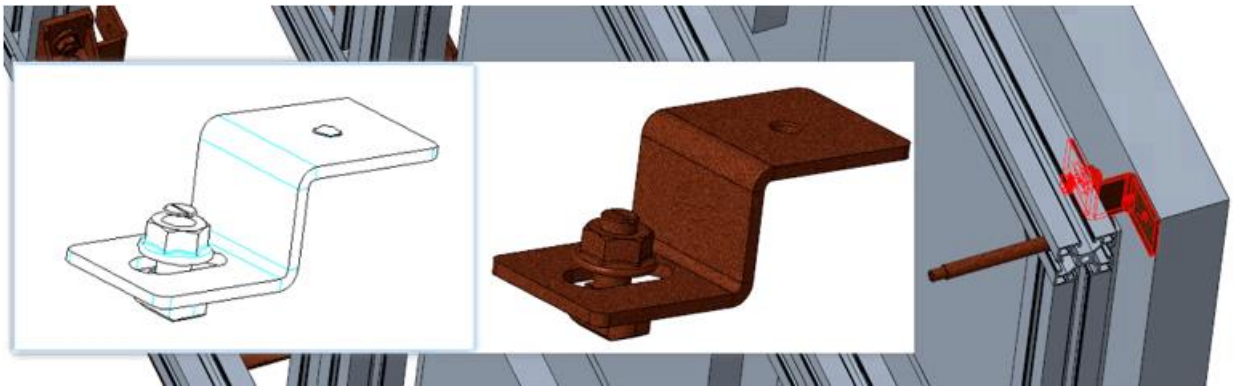

Figure 2-33 Single-point Cabinet Fixing Piece

7. Cabinet leveling gasket: Put on the expansion bolts, and pad between the frame and the wall, so that the frame is flat and will not bend.

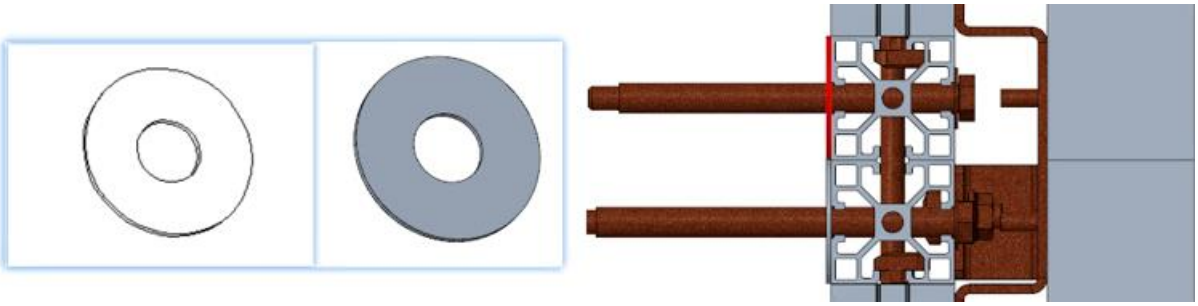

Figure 2-34 Cabinet Leveling Gasket

8. Hexagon socket screws: Used to connect the cabinet with three kinds of fixing pieces when the cabinet is installed from front side.

Figure 2-35 Hexagon Socket Screws

9. Inner expansion bolt: Fix the frame to the wall.

Figure 2-36 Inner Expansion Bolt

10. Long screws: Contains two gaskets for the mutual connection between frames.

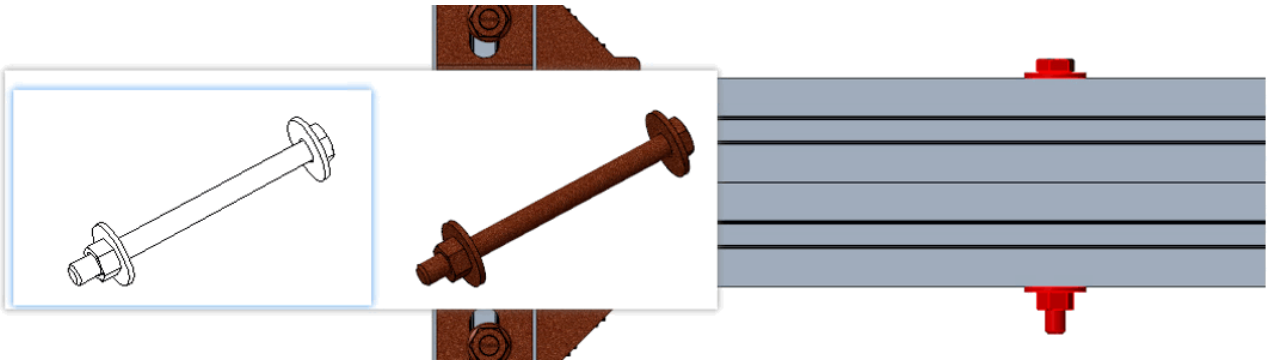

Figure 2-37 Long Screws

Installation Diagram

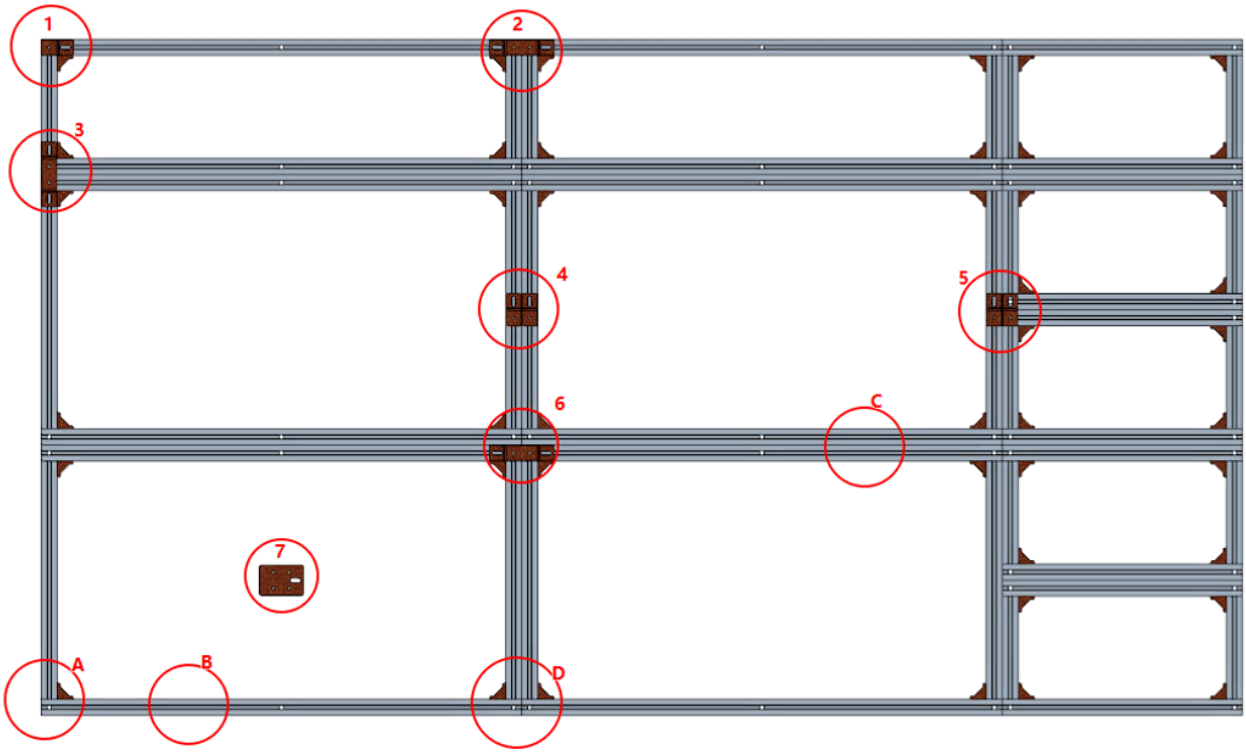

Figure 2-38 Installation Diagram

Step 1 When you mount the frame, if the wall is uneven, you can use a cabinet leveling gasket between the wall and frame to ensure that the frames are at the same surface, see part A in the diagram.

Step 2 Use the inner expansion bolt to fix the frame to the wall, see part A in the diagram.

Step 3 Use hexagon socket screws to fix the cabinet to the fixing pieces.

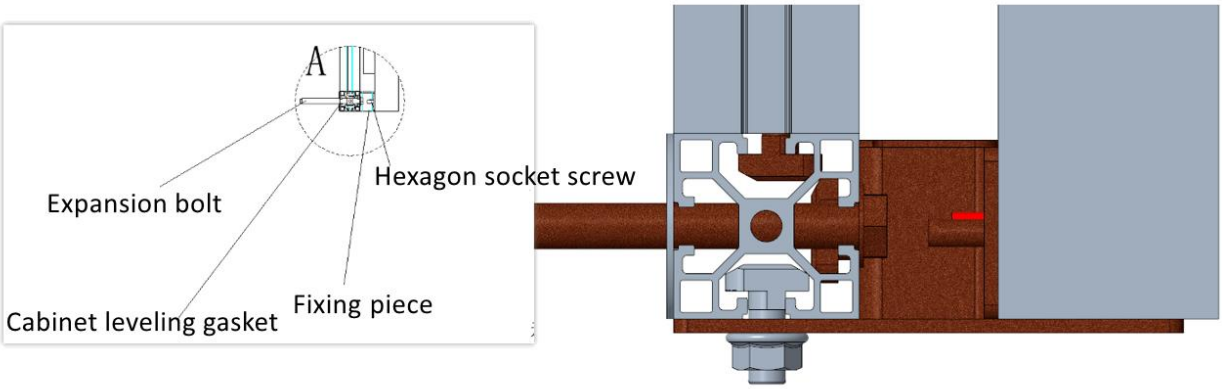

Figure 2-39 Fix the Cabinet

Step 4 Use long screws to connect the frame together, see part C in the diagram.

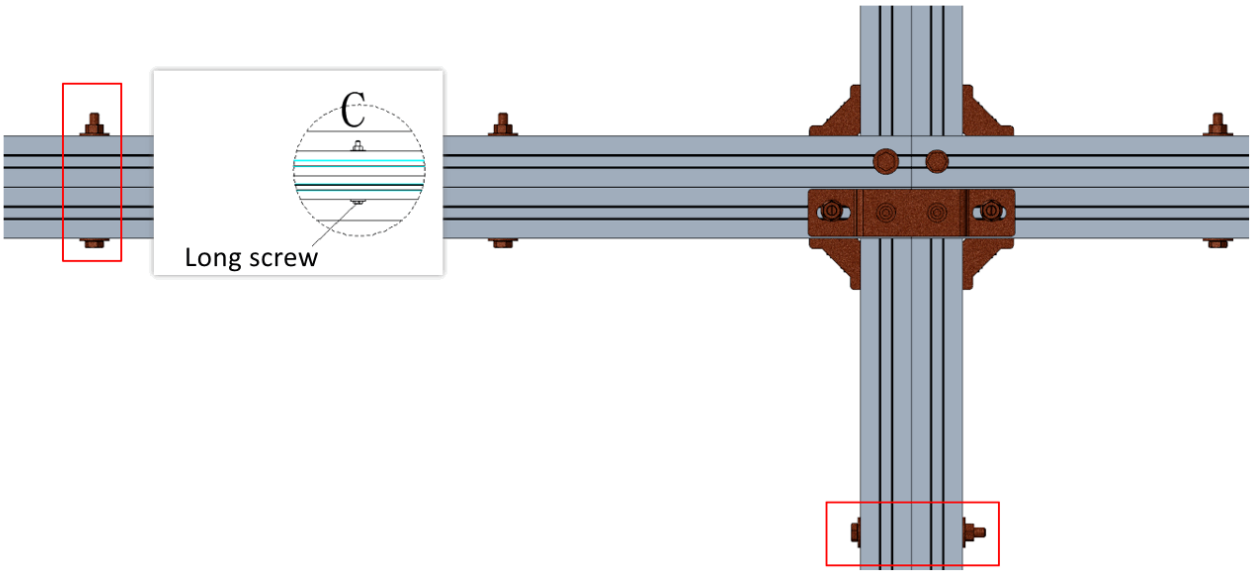

Figure 2-40 Connect the Frame

Step 5 When you mount frames, you can use the connector to limit the frame's movement, see part D in the diagram.

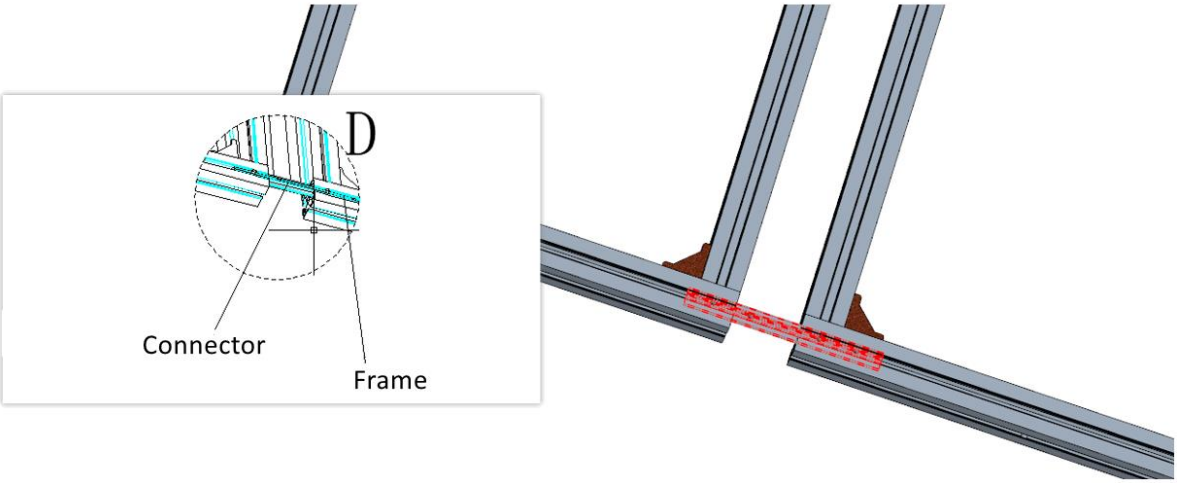

Figure 2-41 Connect the frame

Step 6 To install the first row of cabinets, you need to use four cabinet fixing pieces as the temporary base support. After the first row is installed, the temporary base support can be removed, see part B in the diagram.

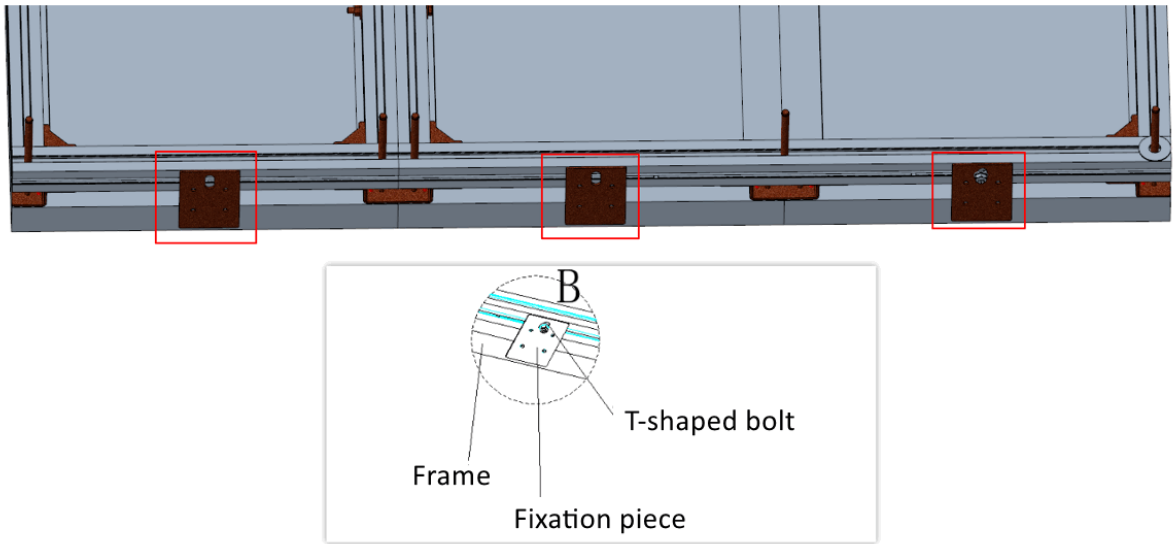

Figure 2-42 Install the Fixation Piece

Step 7 Use the bolts or mechanisms to interlock and fully tighten the cabinets to prevent the cabinet from falling from the wall.

Step 8 Use the fixing piece to connect the cabinet with the frame, and then tighten the inner expansion bolt.

Requirements for the number of fastening nodes for cabinet

Single cabinet node (such as node 1) must be fastened.

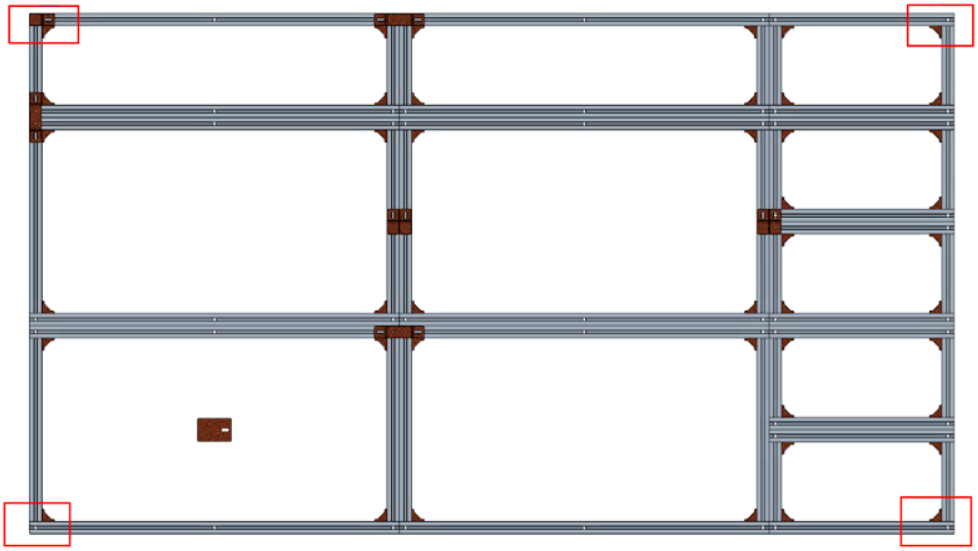

Figure 2-43 Fasten Node 1

At least one adjacent cabinet node (such as node 2 and 3) must be fastened.

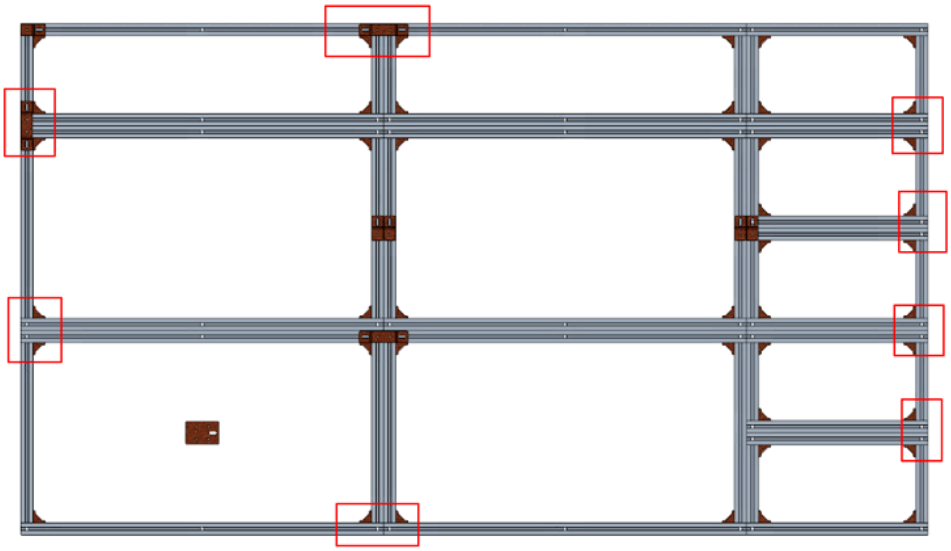

Figure 2-44 Fasten Node 2 and 3

At least two adjacent cabinet nodes (such as node 4, 6, and 7) must be fastened.

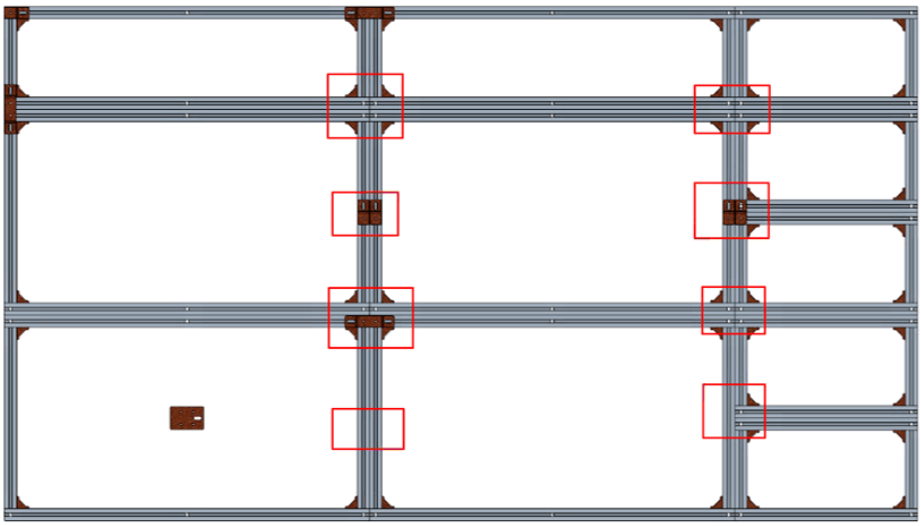

Figure 2-45 Fasten Node 4, 6 and 7

Install the Node

A single-point cabinet fixing piece is needed to install the node 1 in horizontal or vertical level.

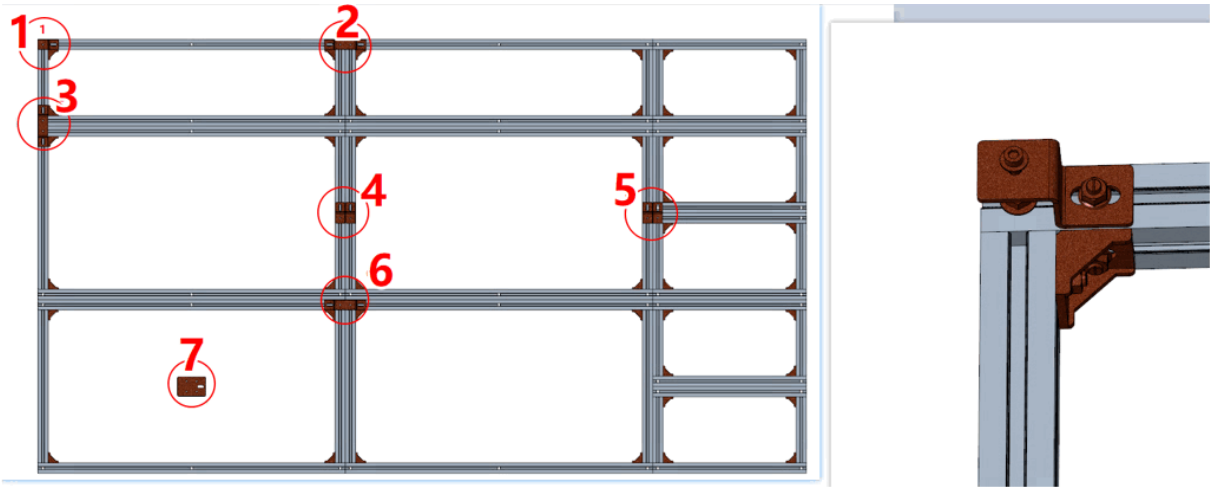

Figure 2-46 Install Node 1

A two-point cabinet fixing piece is needed to install the node 2 in horizontal level.

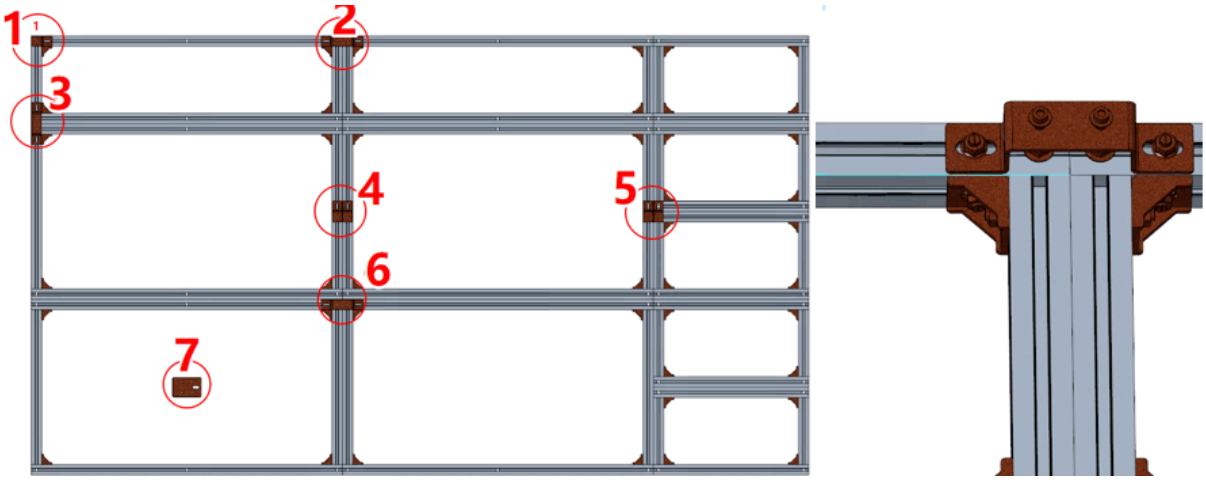

Figure 2-47 Install Node 2

A two-point cabinet fixing piece is needed to install the node 3 in vertical level.

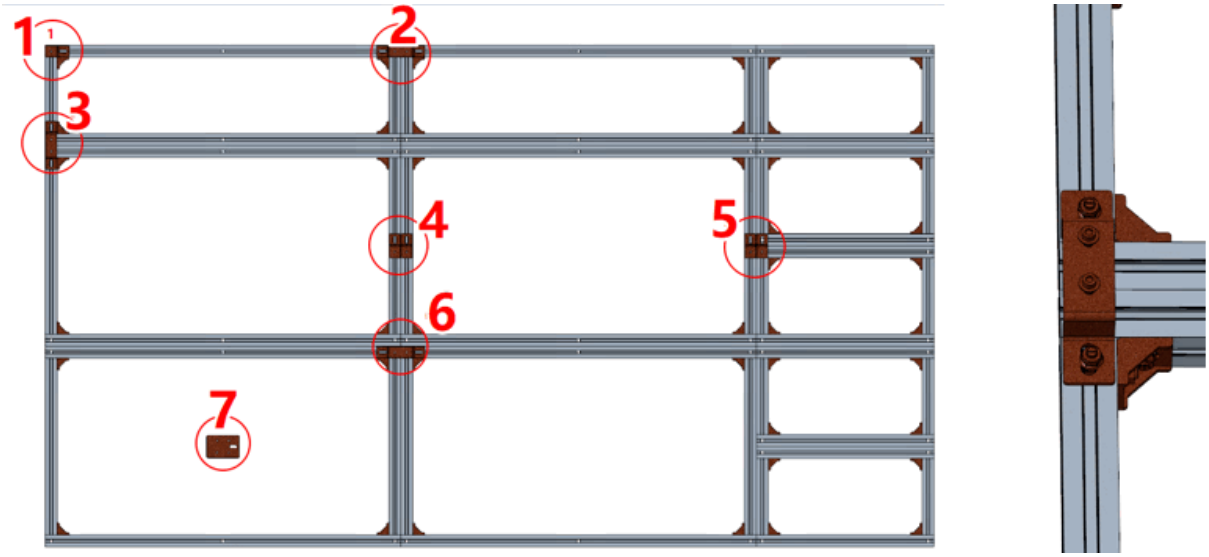

Figure 2-48 Install Node 3

Two two-single-point cabinet fixing pieces are needed to install the node 4 in vertical level.

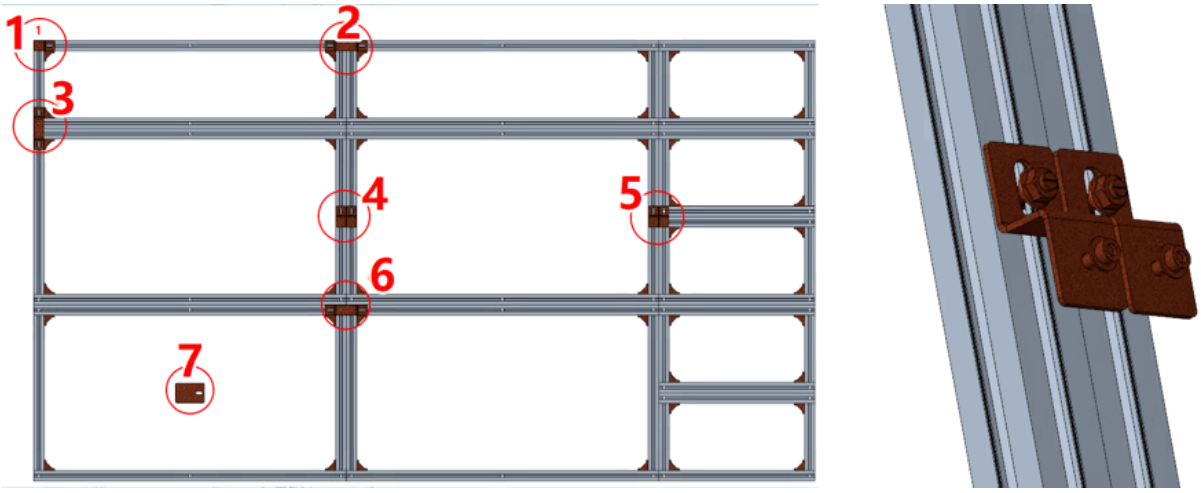

Figure 2-49 Install Node 4

Two two-single-point cabinet fixing pieces are needed to install the node 5 in horizontal or vertical level.

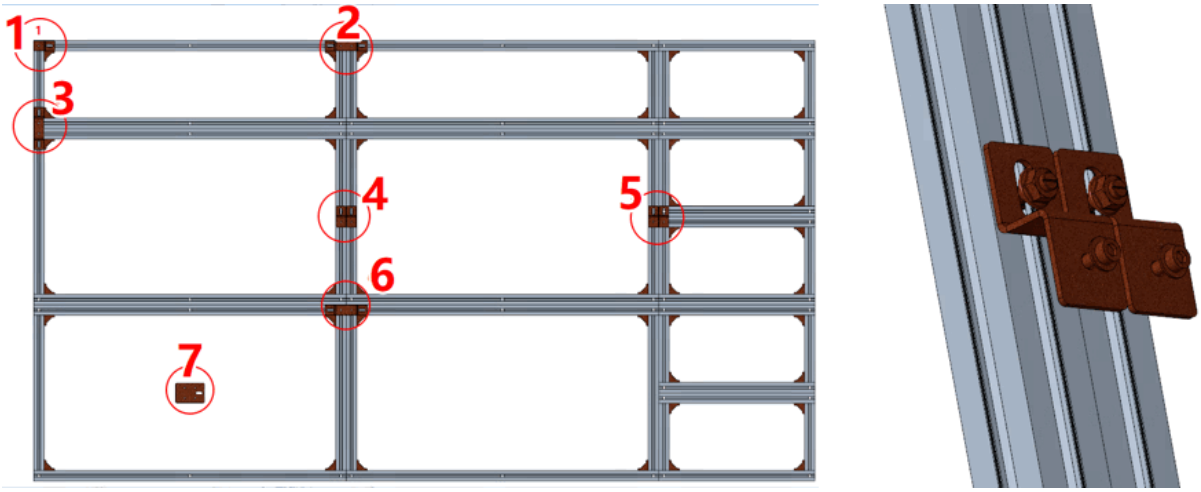

Figure 2-50 Install Node 5

A two-point cabinet fixing piece is needed to install the node 6 in horizontal level.

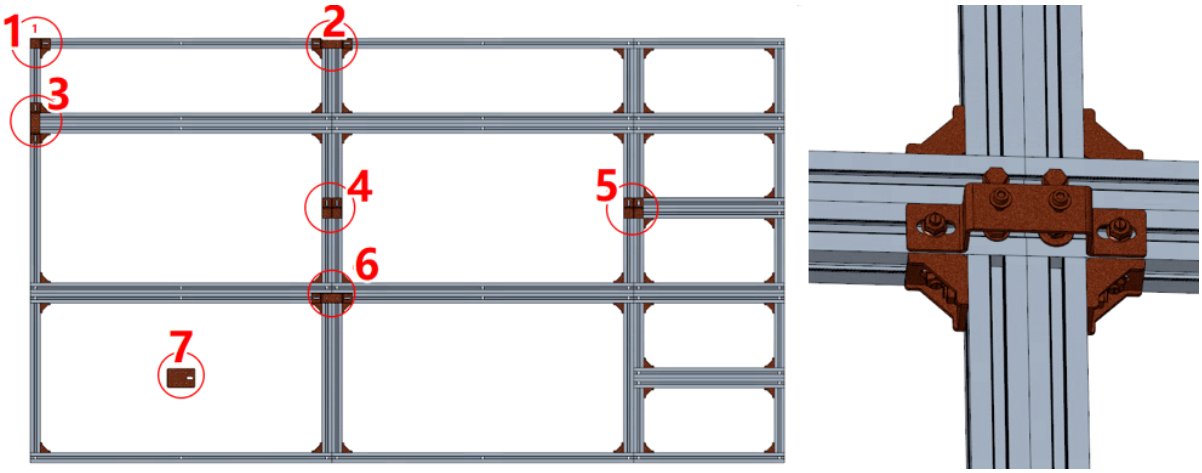

Figure 2-51 Install Node 6

A four cabinet fixing piece is needed to install the node 7 in horizontal level.

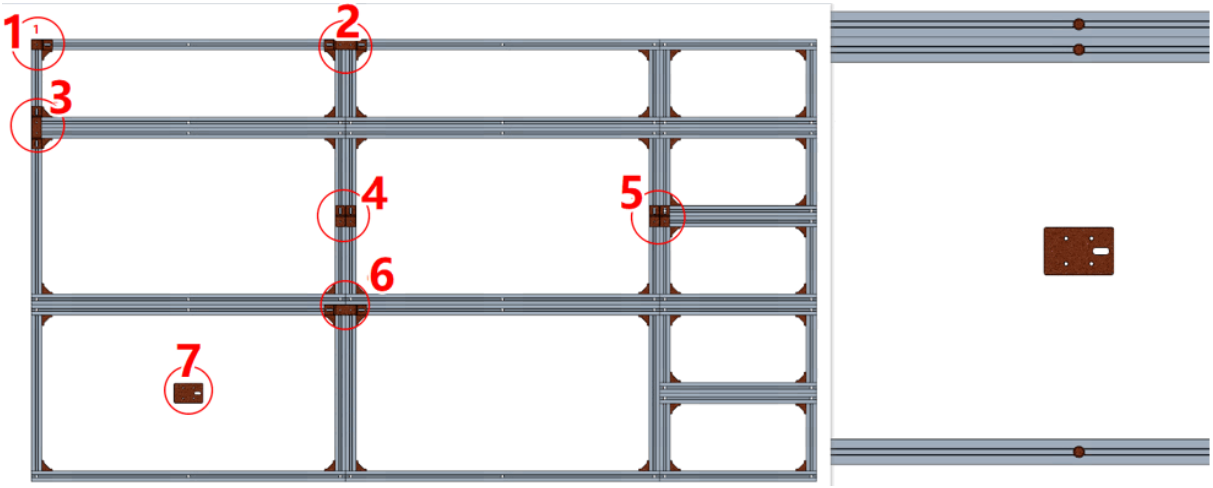

Figure 2-52 Install Node 7

Chapter 3 Cabinet Installation

3.1 Introduction

3.1.1 About Cabinet

A cabinet is a basic unit for LED engineering installation in which LED modules are neatly mounted on a metal sheet (cast aluminum) box, with a built-in independent receiving card and switching power supply, an engineering installation structure, and independent display.

Note

Because the product has different models, the following description takes one model as an example. The actual model prevails when the product is not marked.

3.1.2 Load Capability of Cabinet

Load Capability of Newtork Interfaces

The load capability of a single network interface of the sending card is limited. You can calculate the max load of a single network interface by the following formula.

Max Load of a Network Interface = Pixel Capacity of a Network Interface/Cabinet Resolution

Example

If equipped with a sending card of 650,000 pixels, the max load of a single network interface for a P1.2 cabinet of 480 × 270 resolution is 5 cabinets.

Note

- The load capability of a single network interface can be calculated by the following formula.
- If the 3D function is enabled or a 10-bit single network port is connected, the load capacity will drop.

  $$\text{Max Load of a Network Interface} = 125 \times 10^6 \times 94.8\%/A/B/\text{Cabinet Resolution}$$

  A indicates the bit depth of the access image, such as access to an 8-bit image, A=3, access to an 10-bit image, A=4. B indicates the refresh rate of the signal source, such as access to a 60 Hz signal source, B=60, access to 3D image, B=120.

Load Capability of Power Cords

The load capability of a single power cord is limited. You can calculate the max load of a single power cord by the following formula.

Max Load of a Single Power cord = Power of the Cord/Power of the Cabinet

Note

You can choose power cords and cabinets of different specifications, and calculate the load capability by the formula.

3.2 Install Cabinet

3.2.1 Precautions

Read the following precautions before you install the device:

- Electric discharge may last for a short period of time after the power is shut down. Please wait two minutes after the power is shut down to operate the device.
- Only use the original power cord delivered with the device. Contact authorized dealer to purchase power cord with same specifications.
- Please do not frequently plug or unplug the power cord when the power is on.
- To reduce the risk of fire or electric shock, please do not expose the device to rain or humid environment.
- Avoid humid or high-PH environment to prevent damage to the LED lamps.

3.2.2 Stitch Cabinet Frames

Locate Cabinet Frame

Align two cabinet frames with the locating studs and installation holes. Each cabinet frame is equipped with two vertical locating studs, two sets of vertical installation holes, and two sets of horizontal installation holes.

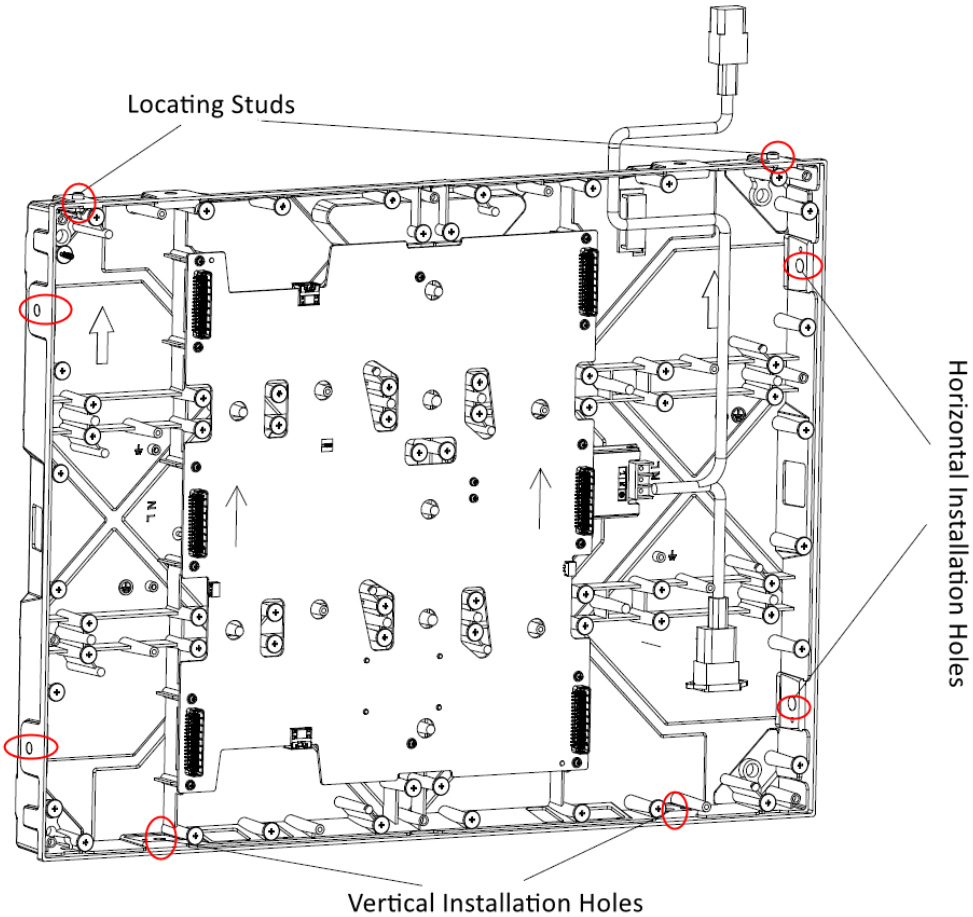

Figure 3-1 Locating Studs, Locating Holes and Installation Holes

Stitch Cabinet Frames Horizontally

Steps

1. Align the installation holes in the horizontal direction of the two adjacent cabinet frames, and adjust the cabinet frames to the relative height.
2. Insert M6 locating screws into the installation holes from left to right only. Do not fasten the screws with nuts.

Note

You can insert the screws.

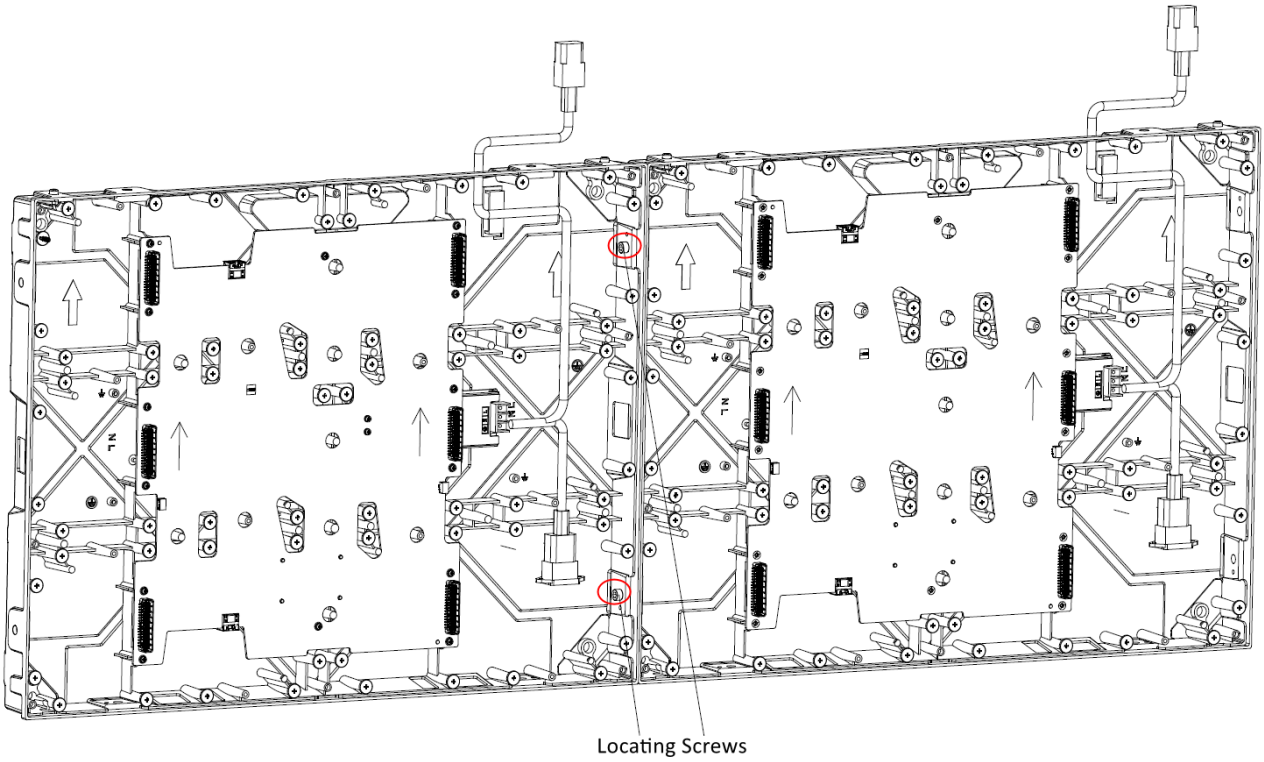

Figure 3-2 Cabinet Stitching Horizontally

Stitch Cabinet Frames Vertically

Steps

1. Align the locating studs in the vertical direction of the two adjacent cabinet frames to the locating holes, and adjust the cabinet frames to the relative level.
2. Insert the M6 locating screws into the installation holes from up to bottom only.

Note

You can insert the screws into the two installation holes.

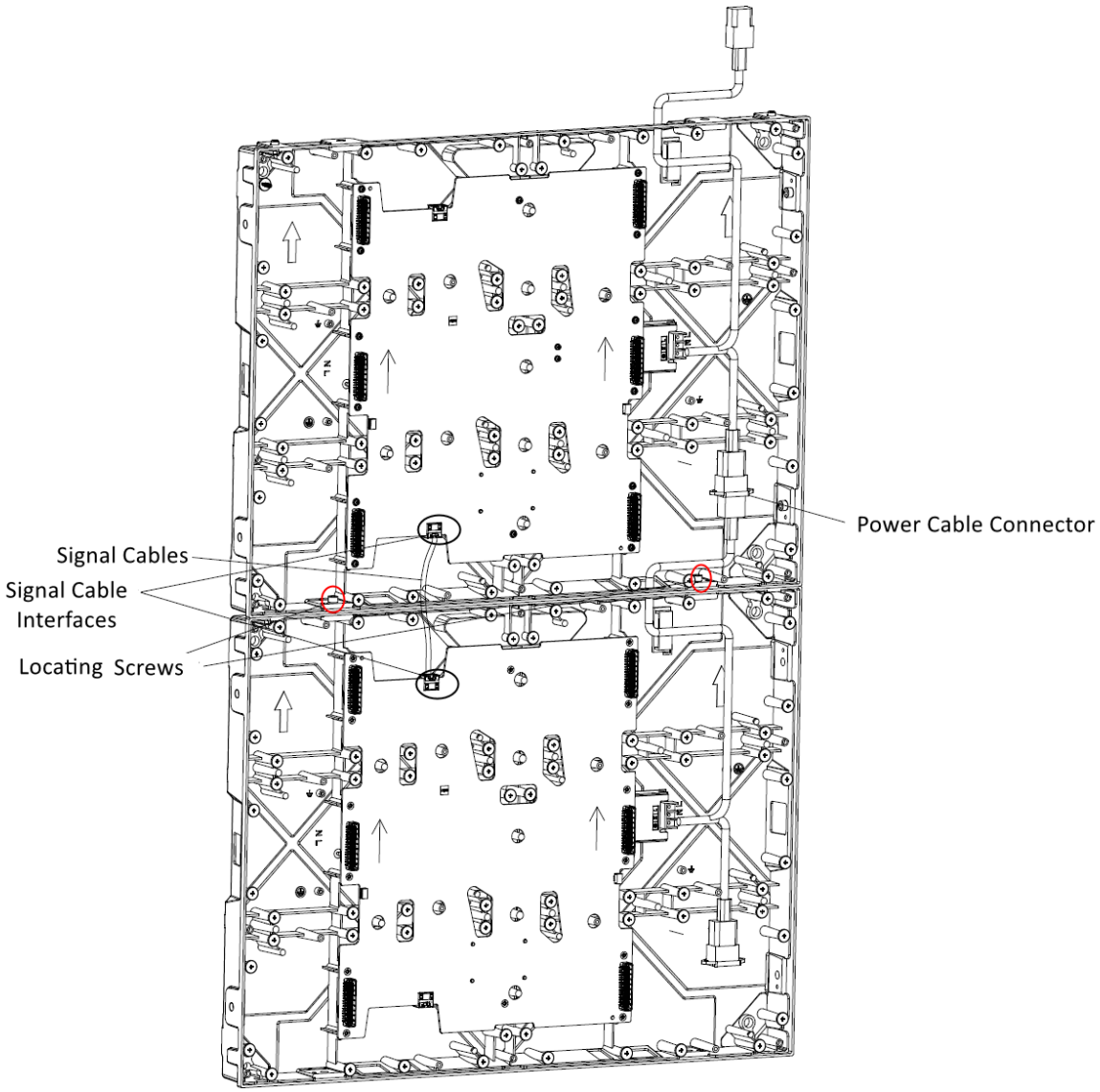

Figure 3-3 Cabinet Stitching Vertically

After the horizontal and vertical stitching, a LED display unit stitching is completed.

3.2.3 Stitch Lamp Boards

The back of the lamp board is shown below.

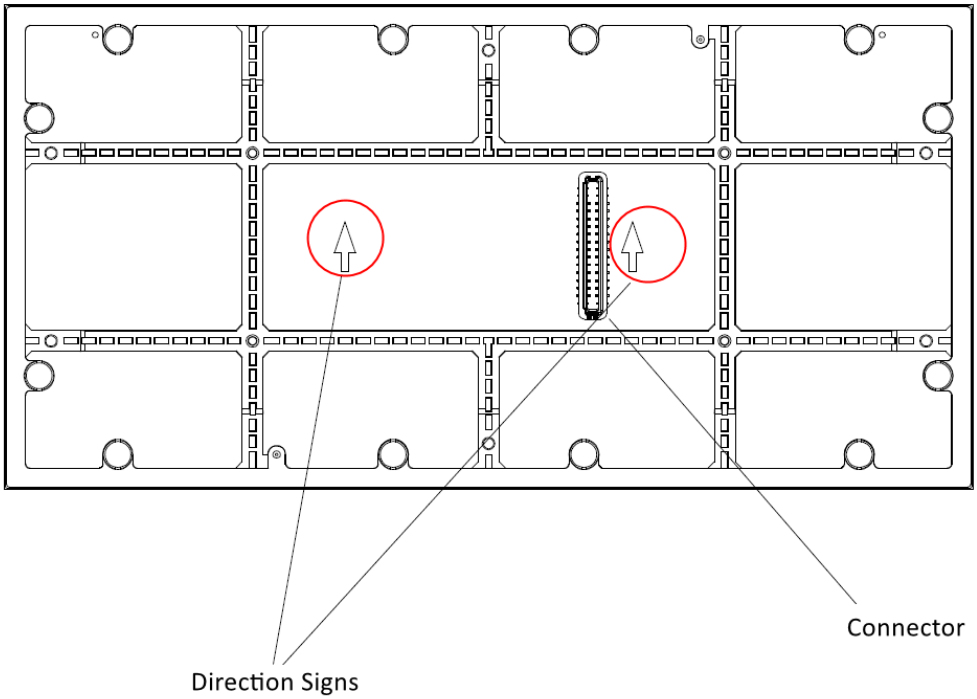

Figure 3-4 Back View of Lamp Boards

Fix the lamp board on the cabinet frames by magnetic attraction. One cabinet frame is equipped with six lamp boards.

Steps

1. Place the lamp board on the front of the cabinet frames, and align the lamp boards and the edge

of the cabinet frames initially.

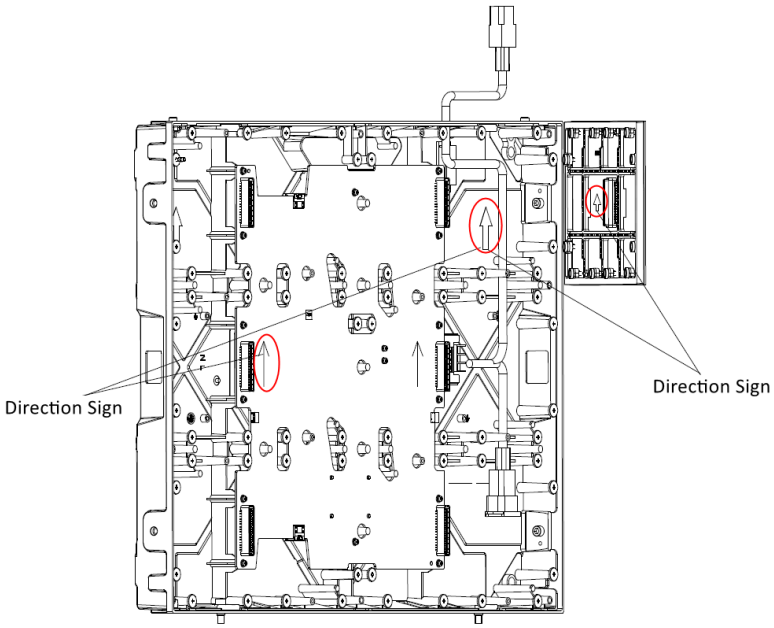

Figure 3-5 Absorb the Lamp Board

Note

Please align the connector and pay attention to the direction of lamp boards when absorbing the lamp board.

2. Align and absorb the lower edge of the lamp boards with the cabinet frames, and then align the locating studs on the lamp boards to the locating holes on the cabinets and absorb the remaining three sides of the lamp boards.
3. Stitch six lamp boards one by one.

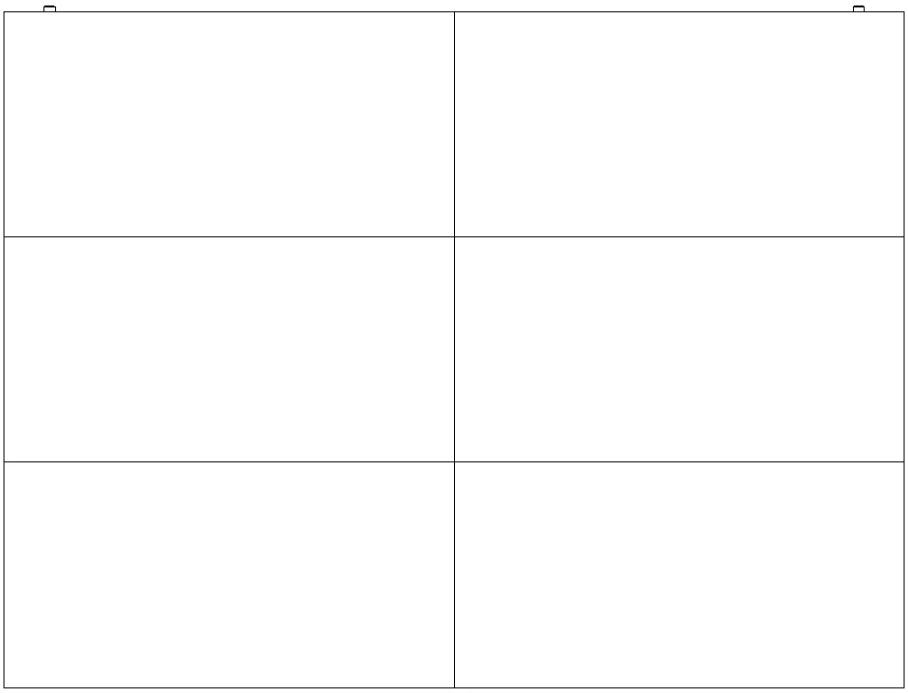

Figure 3-6 Lamp Board Installation Finished

4. Optional: If you need to remove the lamp boards, remove the first lamp boards by using the LED vacuum pumping tool, and remove other lamp boards with hands.

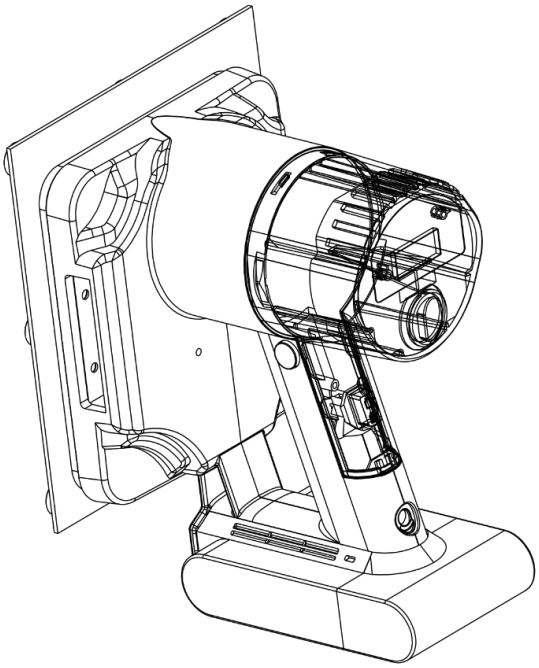

Figure 3-7 LED Vacuum Pumping Tool

3.2.4 Adjust Lamp Boards on the Cabinets Horizontally

Rotate the screws on the cabinet frames with a screwdriver to push the adjusting points and lamp boards out until the cabinet is level with others.

The number of the adjusting points of each lamp board depends on the actual specification.
In the following figure, all the circled points are adjusting points, and there are 11 adjusting points for each cabinet.

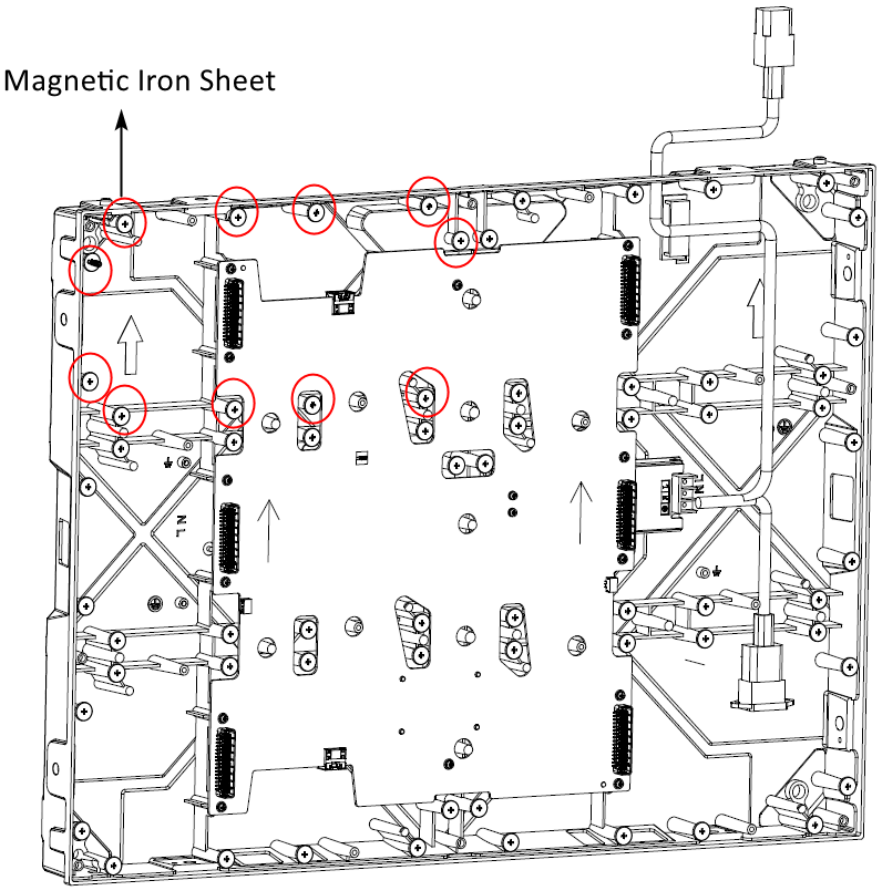

Figure 3-8 Adjusting Points of the Lamp Board

3.2.5 Install Protective Shield

To reduce the risk of electric shock, install protective shield on the exposed connector after completing LED screen installation.

Danger

- To reduce the risk of electric shock, install protective shield on the exposed connector after installing LED screen.
- The power cable of LED screen should be grounded before powering on the screen.
- Before installing the protective shield, ensure that the power is cut off.

Chapter 4 Software Debugging

The device supports configuration on the client of LED display unit. For more details about the installation and configuration process, scan the QR code to get the installation guide.

See Far, Go Further

UD36785B