AD-300

Networked Hardwired Electronic Lock

Overview

AD Series electronic locks from Schlage® are designed to be modular and provide more options to choose from, more functionality in the lock and more compatibility with existing access control systems. Its patented modular design allows the lock to be customized to fit the needs of an application now, and changed to meet future needs without removing it from the door.

To simplify installation, the AD Series combines all the hardware components required at the door for a complete access control system into one integrated design that includes the electrified lock, credential reader, request-to-exit and request-to-enter sensors, door position switch, tamper switch and more.

The AD-300 has a number of features built in that are configurable in the field and a long list of items that can be monitored by access control software. Please consult one of our Physical Access Control Software (PACS) providers for details on the integration of specific features.

Encryption Key & Credential Interoperability

- Hardware configured with our default encryption key or custom key developed by Schlage Custom Encryption Key Service (SCEKS) including NXP, HID® and NFC
- Schlage MIFARE® DESFire® and MIFARE Classic® credentials
- NFC mobile credentials in Apple Wallet® and Google Wallet™
- HID iCLASS®, iCLASS SE® and SEOS® plastic and NFC mobile credentials
- Other competitive credentials (see the Credential Compatibility Guide)

Schlage Credential Services

- CardTrax™ credential format sequencing service offering industry standard formats
- Custom format development

1. Check with PACS provider for specific support of mobile credentials in Apple Wallet® and Google Wallet.™

Features & Benefits

- Open architecture platform - integrated into most popular physical access control systems through our PACS Alliance program
- Multi-technology credential compatibility includes Schlage MIFARE®, NFC mobile[1], and proximity
  - Optional support for HID® smart and NFC mobile credentials
- Panel interface options ensure seamless communication with the access control system
- Real-time communication between access control system and lock
- Field configurable fail safe/fail secure and other capabilities per code
- Available in cylindrical, mortise, mortise deadbolt and exit trim
- Compatible with major brands of master key systems
- A wide selection of credential readers and networking options to choose from
- Compatible with NFC mobile credentials on iOS and Android™ platforms[1]

CYBERSECURITY
Learn about Allegion's commitment

Panel Interface Board (PIB300-2D)

If the system requires Wiegand or Clock & Data protocol (rather than a direct RS-485 connection), the AD Series open architecture platform connects up to two AD-300 locks to the Panel Interface Board (PIB300 - sold separately, if required) that seamlessly connects to an access control panel or reader interface board. All monitoring is captured at the remote monitoring station.

Exterior

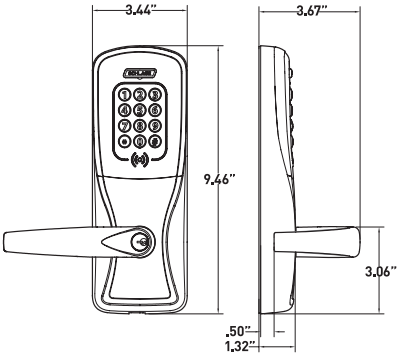

Interior

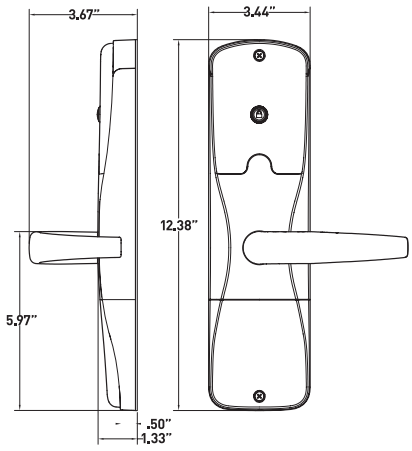

1. Lock requires less than 100 msec, response time does not include latency time of ACP.
2. Storeroom and office/classroom functions not available with mortise deadbolt option.
3. Consult your PACS provider for specific scope of support, including interior pushbutton, mechanical key override and deadbolt position availability.
4. Not available on exit trim.
5. Software indicates lock/unlock status based on sequence of events, but cannot validate mechanical clutch position unless monitored on RS-485 connection.

AD-300 Electronic Lock Specifications	
Credential verification time	< 1 second[1]
Data rate	RS-485 : 9.6 kbps
Visual/audible communications	Tri-colored LED's and audible indicators (field configurable)
System interface	Wiegand or Clock & Data via PIB300 or RS-485 directly
Power supply	12 VDC or 24 VDC
Voltage range	4 VDC to 26 VDC
Max current requirement	Up to 250 mA
Cable specifications for power	18AWG, 2 conductor (Belden 8760 or equivalent)
Cable distance for power	AD-300 to power supply: up to 1,000 ft (303 m)
Cable specifications for data	24AWG, 2 or 4 conductor shielded (Belden 9841, 9842 or equivalent)
Cabling distance for data	AD-300 to PIB300 or ACP, RS-485: up to 4000 ft (1219 m)
Operating temperature	-31° to 151°F (-35° to 66°C)
Operating humidity	0 - 100% non-condensing
Certifications	ANSI/BHMA A156.25; ANSI/BHMA Grade 1; UL 294; ULC S319; UL 10C 3 hour; FCC Part 15; Industry Canada (IC); ADA compliant Cylindrical and mortise chassis only: TDI DR-464; DR-465; FL12400, FL4613, FL1592, FL13013, FL14482 Mortise chassis only: FL3905
Accessories	Panel Interface Board (PIB300), SUS-A Cable used with SUS Android mobile app, Dry Contact Relay Board (RLBD) may be required for supervised inputs (Wiegand systems)

PIB300-2D Specifications	
Communication range	PIB300 to lock, RS-485: up to 4000 ft (1219 m) PIB300 to ACP, Wiegand or Clock & Data: up to 500 ft (152 m)
Visual/audible	13 LEDs for status indicators
System interface	Wiegand or Clock & Data
Power supply	12 VDC or 24 VDC
Voltage range	9.5 VDC to 26 VDC
Max current requirement	Up to 250 mA
Operating temperature	-31° to 151°F (-35° to 66°C)
Dimensions (H x W x D)	7.1" x 7.1" x 3.0" (18.0 cm x 18.0 cm x 7.6 cm)
Weight	1.25 lb (.57 kg)
Cable specifications (PIB300 to ACP)	22AWG, 8 conductor shielded (Alpha 1298C or equivalent)
Certifications	NEMA 1, 4, 4X, 6; UL 294; FCC Part 15; RoHS

Functions

- Storeroom[2]
- Office/classroom[2, 3, 4]
- Privacy[3, 4]
- Apartment[3, 4]

Standard Status Signals

- Lock/unlock status[5]
- Request-to-exit
- Door position
- Mechanical key override[3]
- Deadbolt position[3]
- Interior cover tamper guard[3]
- Communication status[3]
- Interior push button[3]
- Request-to-enter[3]

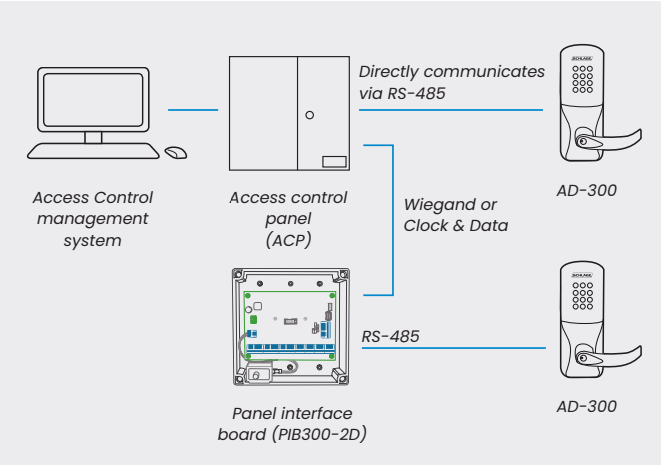

Mechanical Specifications			
	Cylindrical	**Mortise**	**Exit Trim**
Handing	Handed to order, field reversible		
ANSI standard (meets or exceeds)	A156.25 locked outdoor A156.2 Series 4000 Grade 1	A156.25 locked outdoor A156.13 Series 1000 Grade 1	A156.25 locked outdoor A156.3 Grade 1
Door thickness	1-3/4" standard, 1-3/8" to 2-3/4" optional (available in 1/8" increments)		
Backset	Standard: 2-3/4" Optional: 2-3/8", 3-3/4", 5"	2-3/4" only	Defined by exit device
Latch bolt	Standard: 1/2" throw Optional: 3/4" throw	Standard: 3/4" throw Optional: 1" throw on mortise deadbolt	Provided by exit device
Levers	Pressure cast zinc, plated		
Strike	Standard: 1-3/16" lip, ANSI, 1-1/4" x 4-7/8" Optional: Additional configurations available, please see price book		Provided by exit device
Cylinder and keys	Schlage® 6-pin Everest 29 S123 keyway Conventional cylinder with two patented keys standard. Additional options available including SFIC, FSIC and competitor brands. See lever and cylinder compatibility data sheet.		

Standard Multi-Technology Reader Specification	
Credential technologies	Proximity (125 kHz), Smart (13.56 MHz) and Near Field Communication (NFC)
Standards	ISO 15693, ISO 14443
Read range	Proximity: up to 1.25"; Smart: up to .75"; NFC mobile: mobile device dependent
Proximity credential support	Compatibility: Schlage, ISONAS™, HID[4], GE/CASI ProxLite®, AWID® and LenelProx®
Smart credential support	Secure sector: Schlage MIFARE Classic®, Schlage MIFARE Plus®, Schlage MIFARE® DESFire®, PIV and PIV-I[1, 2] CSN only: HID iCLASS®, HID iCLASS SE®, Inside Contactless Pico Tag®, MIFARE Classic/Plus/DESFire, ST Microelectronics®, Texas Instruments Tag-It®, Phillips I-Code®
Mobile credential support	NFC mobile credentials in Apple Wallet® and Google Wallet™ [3]
Certifications	FCC, Industry Canada (IC), UL 294
Options	12 button, 3 x 4 matrix backlit keypad

AD Series exit trim is compatible with Von Duprin 98/99 and 98/99XP (rim, mortise, SVR; and CVC, CVR on metal doors only), Von Duprin 22/22F (rim and SVR) and Falcon 25 (rim) exit devices from Allegion. The AD Series is also compatible with select rim exit devices from Sargent, Corbin Russwin, Yale, Dorma and Precision.

For Von Duprin and Falcon solutions, a low current request-to-exit switch (RX-LC or AE) is required. The part numbers are:

Von Duprin: 050281
Falcon: 650359

Refer to the AD Series Exit Trim Compatibility Guide for additional details.

Benefits of AD Series Multi-Technology Readers:

- Reads multiple brands of both proximity (125 kHz) and smart (13.56 MHz) technologies with single reader
- Compatible with NFC mobile credentials in Apple Wallet® and Google Wallet™ [3]
- Allows facility to migrate to more secure credential technologies over time and as budgets permit

Additional Readers

Si option with HID® support

Supports:

- Secure application area of HID iCLASS®, iCLASS SE®, Seos® smart credentials
- iCLASS Standard Key and Elite Keys
- HID NFC mobile credentials
- All Schlage MIFARE® and NFC mobile credentials

Does not support:

- Proximity
- Bluetooth® (BLE) mobile credentials

Magnetic stripe

- Triple track reader (1, 2 or 3), field configurable
- ABA, ISO76XX standard

Keypad

- Backlit keypad
- 12 button, 3 x 4 matrix

Available AD Series Reader Modules

Multi-Technology

- Proximity
- Smart
- NFC mobile

+ KEYPAD option

Si with HID Support

- Smart
- NFC mobile

+ KEYPAD option

Magnetic Stripe (swipe)

+ KEYPAD option

Keypad

1. FIPS 201-2 integration ready option available: The AD Series can be used in applications which require approval by the U.S. Federal Government under HSPD-12 for FIPS 201-2 compliance when installed as part of a tested and approved integrated solution. Please see the AD-402 data sheet or AD-302 data sheet for complete details.
2. 75 bit output format default. Configurable to other output formats.
3. Check with PACS provider for specific support of mobile credentials in Apple Wallet® and Google Wallet.™
4. Proximity bit lengths greater than 37 not supported.

Allegion, the Allegion logo, Falcon, Schlage, the Schlage logo, and Von Duprin are trademarks of Allegion plc, its subsidiaries and/or affiliates in the United States and other countries. All other trademarks are the property of their respective owners.

Ordering Information

Available through one of our GSA schedule 84 approved distributions. BAA options available

AD	-	300	-	CY	-	70	-	MS	-	SPA	-	626	-	P6	-	S123	-	RH	-	13-247	-	10-025	-	134
Series		Class		Chassis		Function		Reader		Lever Style		Finish		Key Cylinder		Keyway		Handing		Backset & Latch or Armored Front		Strike		Door Thickness
1		2		3		4		5		6		7		8		9		10		11		12		13

Standard options are indicated with a dot. See price book for specific configuration options.

3 Chassis

CY	Cylindrical
MS	Mortise
MD	Mortise deadbolt
993R	Exit trim – Rim/CVC/CVR
993S	Exit trim – SVR
993M	Exit trim – mortise
993DT	Non-functioning dummy trim for exit

4 Function

40	Privacy
50	Office/classroom
60	Apartment
70	Storeroom

Lock function capabilities are determined by users access control system.

5 Reader

• KP	Keypad
MS	Magnetic stripe (swipe)
MSK	Magnetic stripe + keypad (swipe)
MT	Multi-technology (125 kHz, 13.56 MHz, NFC)
MTK	Multi-technology + keypad (125 kHz, 13.56 MHz, NFC)
FMK	FIPS 201-1 compliant multi-technology + keypad (125 kHz and 13.56 MHz)
Si	HID support
SiK	HID support + keypad
DT	Dummy trim

6 Lever

ATH	Athens
BRK	Boardwalk
BRW	Broadway
LAT	Latitude
LON	Longitude
RHO	Rhodes
SPA	Sparta
TLR	Tubular

Available with tactile warning options.

7 Finish

605	Bright Brass
606	Satin Brass
612	Satin Bronze
619	Satin Nickel
625	Bright Chrome
• 626	Satin Chrome
626AM	Satin Chrome Antimicrobial
643e	Aged Bronze

8 Key Cylinder

• P6	Schlage 6-pin conventional key-in-lever cylinder

See price book for other SFIC, FSIC and less cylinder options available. Compatible with Schlage®, Sargent®, Corbin Russwin, Medeco® and Yale®.

9 Keyway

• S123	Everest 29

See price book for other available keyway options including restricted keyways in Primus XP high security cylinders and master keying.

10 Handing

• RH	Right handed
LH	Left handed

Field reversible.

11 Backset & Latch or Armored Front

• 13-247	Cylindrical: 2-3/4" backset deadlatch, square corner, 1-1/8" x 2-1/4"
• 09-663	Mortise: Armor front, 1-1/4" wide, square corner

See price book for mortise deadbolt and other backset and latch options or armor front options.

12 Strike

• 10-025	Cylindrical: 1-3/16" lip, ANSI, no box, 1-1/4" x 4-7/8"
• 10-072	Mortise: 1-3/16" lip, 1-1/4" x 4-7/8" square corner, box

See price book for other available strikes.

13 Door Thickness

• 134	1-3/4"

Other thicknesses available between 1-3/8" and 2-3/4" See price book for details.

Lever Styles

Conventional cylinders shown, SFIC and FSIC also available.

Athens

Boardwalk

Broadway

Latitude

Longitude

Rhodes

Sparta

Tubular

Finishes

605
Bright Brass

606
Satin Brass

612
Satin Bronze

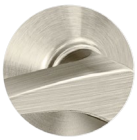
619
Satin Nickel

625
Bright Chrome

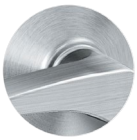
626
Satin Chrome

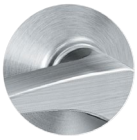
626AM
Satin Chrome Antimicrobial

643e
Aged Bronze

© 2024 Allegion plc
004448, Rev. 11/24