REV.	DESCRIPTION	ENG.	APPROVAL

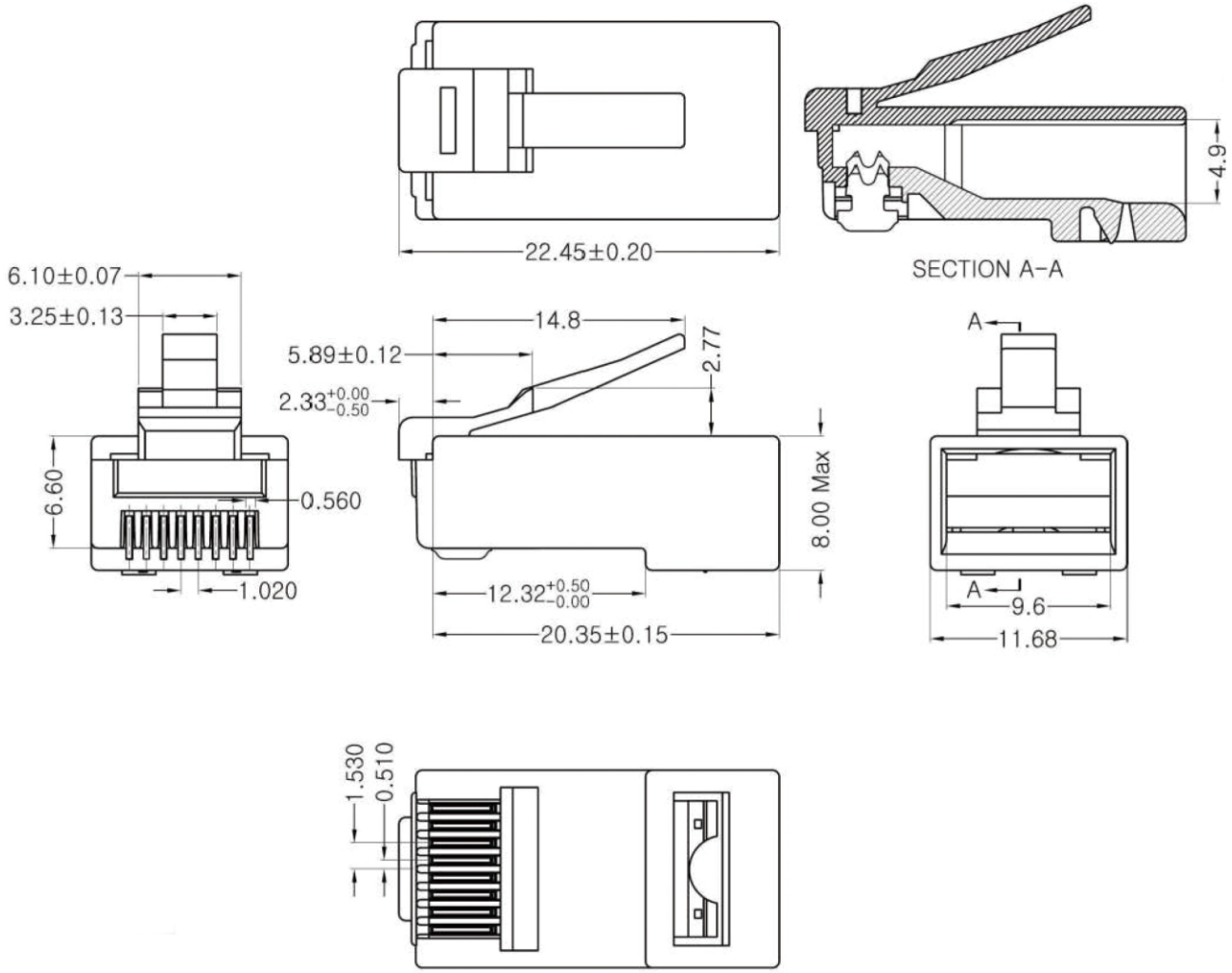

NOTES:

1. Operation Temperature:-40℃～+85℃.
2. Electrial Characteristics:
   2.1>Rated Current:125V AC,1.5A@25℃.
   2.2>Contact Resistance:20mΩ Max.
   2.3>Insulation Resistance:500MΩ Min,100V DC/min.
   2.4>Voltage Proof: 1000V AC/1 minute no breakdown.
3. Mechanical Characteristics:
   3.1>Insertion Force & Withdrawal Force:30N Max.
   3.2>Durability:750 cycles Min.
4. Environmental compliance:
   4.1>the products are compliant with the RoHS, and REACH etc.

THESE DRAWINGS AND SPECIFICATIONS ARE THE PROPERTY OF INTRACOM Asia Co.,Ltd. AND SHALL NOT BE REPRODUCED COPIED OR USED IN ANY MANNER WITHOUT THE PRIOR WRITTEN CONSENT OF INTRACOM Asia Co.,Ltd.

UNLESS OTHERWISE SPECIFIED:DIMENSIONS ARE IN MILLIMETERS ANGULAR TOLERANCE:±1°

TOLERANCE(INCH)		TOLERANCE(MM)	
x	±0.02"	x	±0.5mm
x.x	±0.01"	x.x	±0.20mm
x.xx	±0.008"	x.xx	±0.15mm
x.xxx	±0.005"	x.xxx	±0.10mm

INTELLINET NETWORK SOLUTIONS

TITLE: Cat6 Modular Plug 3prongs solid wire,15u", one piece type	APPD		VID	102012
	Check			
CUSTOMER:	Drawer		Date	2024-03-09
CUSTOMER P/N:	Unit	mm	Projection	
ICT P/N: 791281	Scale	1:1	Size.	A4
DWG.NO:	Sheet	1 of	REV.	A

THIS DRAWING MAY BE USED IN WHOLE OR PART