FXLuminaire

RS Up Light STANDARD BASE

PROJECT

CATALOG #

TYPE

NOTES

The Core of the FX Up Light Family. The RS allows designers to use different lamps to create custom effects while maintaining consistency in style. With knowledge of the science and art of lighting, a professional designer can choose a lamp source to suit the desired effect or emotional response.

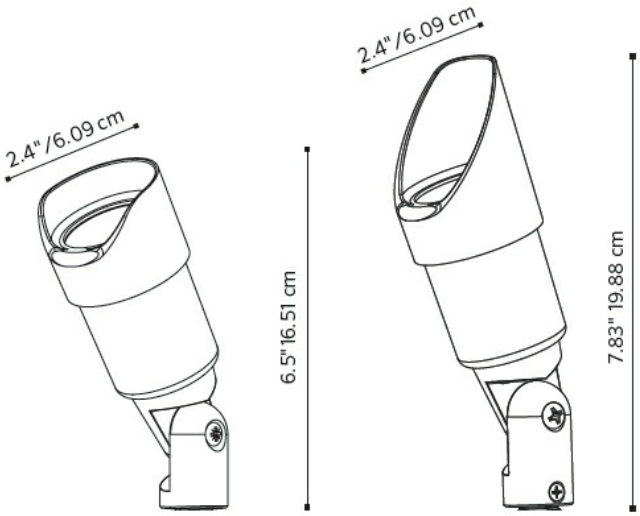

Quick Facts

- Die-cast zinc/aluminum alloy
- TGIC powder coat finish
- MR-16 lamp type
- Compatible with Luxor® technology
- ProAim™ adjustability
- Input voltage: 10-15V

Output	LED20WFL	ECO20WFL	LED35WFL	ZD35WFL
Total Lumens	250	383*	335	310
Input Voltage	10 to 15V	10 to 15V	10 to 15V	10 to 15V
Input Power (W)	4.0	4.0	5.0	5.0
VA	4.3	6.2	5.4	5.4
Efficacy (Delivered)	62	50	67	67
CRI (Ra)	80+	80+	80+	80+
Center Beam Candlepower (CBCP)	570	541	660	660
CCT	2,700K	2,700K	2,700K	2,700K
Beam Angle	35°	35°	35°	35°
Dimming	PWM, Phase**	PWM, Phase**	PWM, Phase**	PWM, Phase**
Luxor Compatibility				
ZD Option	Use Luxor Cube (e.g., LCMLV)	Use Luxor Cube (e.g., LCMLV)	Use Luxor Cube (e.g., LCMLV)	Zoning/Dimming
Minimum Rated Life (hrs L90 B10)	40,000	30,000	40,000	40,000

* Total Lamp Lumens
** For optimal performance, use a trailing-edge, phase-cut dimmer.

About FX Luminaire

As a leading manufacturer of landscape and architectural lighting, FX Luminaire provides innovative products, resources, and support to help customers bring their visions to life. The company offers a range of specification-driven solutions, including fixtures, controls, and accessories, to enhance residential and commercial landscapes.

Materials

Zinc/aluminum alloy housing, shroud, and knuckle with stainless steel hardware

Knuckle

Machined brass knuckle with ½"-14 (13 mm) NPSM threads. Compress and lock features prevent slip after installation. Complete adjustability over 220° of vertical adjustment.

LED

GU5.3 lamp base. Preinstalled LED MR-16 with Cree LEDs offers a warm 2,700K color temperature with a minimum rated life (L90) 40,000 hours.

Optics

Stainless steel spring in housing ensures the lamp and additional lenses stay flush against the glass lens, optimizing output and beam angles. Recess the lamp farther inside the housing to hide additional glare with the Recessor Ring (specify separately). For additional color filters, spread lenses, hex baffles, etc., use MR-16 sized accessories (MR-16: 2" (50 mm) dia. x 1 mm thickness).

Finish

Durable polyester TGIC powder coat finish, providing superior outdoor weathering in all conditions. Tested to ASTM standards.

Hardware

Stainless steel angle lock screw. Includes 10" (254 mm) ABS slotted installation spike.

Wiring

18 AWG (1 mm); SPT-1W; 220°F (105°C); 300V; 10' (3 m) length.

Sockets

MR16 GU5.3 socket with retaining clips. Ceramic socket base with heat-resistant contact pad. Stainless steel retaining clips ensure high spring force retention.

Power

Input 10–15 VAC/VDC, 50/60 Hz. Remote transformer required (specify separately).

Housing

Die-cast zinc/aluminum alloy housing with capacity for one (1) standard MR-16 lamp.

Glare Control

Die-cast zinc/aluminum alloy shroud with 15° (standard) or 45° (long shroud) cutoff options.

Weight

2.6 lbs. (1.2 kg)

Lens

Tempered, low-iron, soda-lime glass lens with shock resistance and high tolerance for thermal expansion and stress.

Ambient Operating Temperature

0°F to 140°F (-18°C to 60°C)

Installation Requirements

Designed for installation in the upward direction only. Use waterproof, weather resistant wire connectors.

Control

ZD option utilizes Luxor technology to zone light fixtures in up to 250 groups, and dim each group in 1% increments between 0 and 100%. An installed Luxor controller is required to perform these actions.

Manufacturing

ISO 9001:2015 certified facility. Fixture assembled in Mexico; lamp made in China.

Warranty

10-year limited warranty on fixture; 5-year limited warranty on preinstalled FX Luminaire LED lamp.

Listings

[field_spec_builder_mount] [field_spec_builder_mount]

Fixture	Power	Shroud	Finish
RS	**LED20WFL** 4.3 VA, 2700K, 35° LED MR-16 lamp (PRO lamp series)	**[default]**	**BZ** Bronze Metallic
	ECO20WFL 6.0 VA, 2700K, 30° LED MR-11 lamp (ECO lamp series)	**LS** 45° Angled Long Shroud	**FB** Black
	LED35WFL 5.4 VA, 2700K, 35° LED MR-16 lamp (LED lamp series)		**DG** Desert Granite
	ZD35WFL 5.4 VA, 2700K, 35° LED MR-16 lamp (ZD lamp series)		**WI** Weathered Iron
	NL Lamp not included		**SB** Sedona Brown

[ ] – [ ] – [ ] – [ ]

EXAMPLE FIXTURE CONFIGURATION: *RS*-XX-XXXX-XX

RS LED20WFL - Illuminance at a Distance

Distance	Center Beam fc	Beam Width
Feet (Meters)	**Foot-Candles (Lux)**	**Vertical : 35 °**
3' (0.9 m)	84 fc (904 lx)	1.6' (0.5 m)
6.0' (1.8 m)	21 fc (226 lx)	3.2' (1.0 m)
9.0' (2.7 m)	9 fc (97 lx)	4.7' (1.4 m)
12.0' (3.7 m)	5 fc (54 lx)	6.3' (1.9 m)
15' (4.6 m)	3 fc (32 lx)	7.9' (2.4 m)
18' (5.5 m)	2 fc (22 lx)	9.5' (2.9 m)

RS LED35WFL - Illuminance at a Distance

Distance	Center Beam fc	Beam Width
Feet (Meters)	**Foot-Candles (Lux)**	**Vertical : 35 °**
3' (0.9 m)	94 fc (1,012 lx)	1.7' (0.5 m)
6.0' (1.8 m)	24 fc (258 lx)	3.4' (1.0 m)
9.0' (2.7 m)	10 fc (108 lx)	5.1' (1.6 m)
12.0' (3.7 m)	6 fc (65 lx)	6.8' (2.1 m)
15' (4.6 m)	94 fc (43 lx)	8.4' (2.6 m)
18' (5.5 m)	3 fc (32 lx)	10.1' (3.1 m)

MOUNTING OPTIONS: Specify Separately

Mounts	Catalog No.
Long Slot Spike	250015840000
Lock Ring	250030410000SP
Straight Coupling	COUP-XX*
Gutter Mount	GM-SS
Mini J-Box for ½" Thread	MJB-050-XX*
ProAim® Ratcheting Spike	PARS
Super J-Box Spike	SJ-XX*
T-Mount Coupling with ½" Thread	TMNT-050-XX*
VersaBox® Mount with ½" Thread	VB-050-XX*
Wall Mount Knuckle	WM-XX*
Round Wall Plate with ½" Thread	WP-RD-050-XX*
Aluminum Riser, ¾" Diameter	YY*-R-XX*

Mounts	Catalog No.
Three-Prong Spike	250020020000
Super Slot Spike	753900
90° Coupling	ELBW-050-XX*
Ground Mount with ½" Thread	GM-XX*
Mini Mount	MM-050-XX*
Post Mount	PM-XX*
TreeBox® Mount with ½" Thread	TB-XX*
Tree Ring	TR-YY*-8P-XX*
Variable Height Riser for Up Lights	VHR-UL
Single-Gang Wall Plate with ½" Thread	WP-1G-050-XX*
Sign Light Riser, Aluminum	YY*-R-SL-XX*

GLARE CONTROL: Specify Separately

Glare Control	Catalog No.	
Hex Baffle for MR-16 LED Lamps	250015260000	

Glare Control	Catalog No.	
RecessorRing® Spacer for MR-16 LED Lamps	RR-MR16	

POWER OPTIONS: Specify Separately

Power	Catalog No.	
Plug-In Transformer, 6 W	MT-6W	
Surge Protection Module -	SURGE-MOD	

Power	Catalog No.	
Step-Down Transformer, UV (120/277 V to 12 V)	ST-UV	