DS-2CD2346G2P-ISU/SL
4 MP Panoramic Fixed Turret Network Camera

AcuSense

Empowered by deep learning algorithms, Hikvision AcuSense technology brings human and vehicle targets classification alarms to front- and back-end devices. The system focuses on human and vehicle targets, vastly improving alarm efficiency and effectiveness.

- High quality imaging with 4 MP resolution
- Excellent low-light performance with powered-by-DarkFighter technology
- One image that presents all the scenes covered by the camera
- Clear imaging against strong back light due to 120 dB true WDR technology
- Focus on human and vehicle targets classification based on deep learning
- Active strobe light and audio alarm to warn intruders off
- Provide real-time security via built-in two-way audio
- Water and dust resistant (IP67)

▪ Specification

Camera	
Image Sensor	2 × 1/2.5" Progressive Scan CMOS
Max. Resolution	3040 × 1368
Min. Illumination	Color: 0.003 Lux @ (F1.6, AGC ON), B/W: 0 Lux with IR
Shutter Time	1/3 s to 1/100,000 s
Day & Night	IR cut filter
Angle Adjustment	Pan: 0° to 30°, tilt: -75° to 75°
Lens	
Lens Type	Fixed focal lens, dual lens, 2.8 mm
Focal Length & FOV	2.8 mm, horizontal FOV: 180°, vertical FOV: 81°
Lens Mount	M12
Iris Type	Fixed
Aperture	F1.6
DORI	
DORI	2.8 mm, D: 37 m, O: 15 m, R: 7 m, I: 3.5 m
Illuminator	
Supplement Light Type	IR
Supplement Light Range	Up to 30 m
Smart Supplement Light	Yes
IR Wavelength	850 nm
Video	
Main Stream	50 Hz: 25 fps (3040 × 1368) 60 Hz: 24 fps (3040 × 1368)
Sub-Stream	50 Hz: 25 fps (1200 × 536, 960 × 432) 60 Hz: 24 fps (1200 × 536, 960 × 432)
Video Compression	Main stream: H.265+/H.265/H.264+/H.264 Sub-stream: H.265/H.264/MJPEG
Video Bit Rate	32 Kbps to 8 Mbps
H.264 Type	Baseline Profile, Main Profile, High Profile
H.265 Type	Main Profile
Bit Rate Control	CBR, VBR
Scalable Video Coding (SVC)	H.264 and H.265 encoding
Region of Interest (ROI)	1 fixed region for main stream
Audio	
Audio Type	Mono sound
Audio Compression	G.711/G.722.1/G.726/MP2L2/PCM/MP3/AAC-LC
Audio Bit Rate	64 Kbps (G.711ulaw/G.711alaw)/16 Kbps (G.722.1)/16 Kbps (G.726)/32 to 192 Kbps (MP2L2)/8 to 320 Kbps (MP3)/16 to 64 Kbps (AAC-LC)
Audio Sampling Rate	8 kHz/16 kHz/32 kHz/44.1 kHz/48 kHz
Environment Noise Filtering	Yes

Network	
Protocols	TCP/IP, ICMP, HTTP, HTTPS, FTP, DHCP, DNS, DDNS, RTP, RTSP, RTCP, NTP, UPnP, SMTP, IGMP, 802.1X, QoS, IPv4, IPv6, UDP, Bonjour, SSL/TLS, PPPoE, SNMP, Websocket, Websockets
Simultaneous Live View	Up to 6 channels
API	Open Network Video Interface (Profile S, Profile G, Profile T), ISAPI, SDK
User/Host	Up to 32 users 3 user levels: administrator, operator, and user
Security	Password protection, complicated password, HTTPS encryption, 802.1X authentication (EAP-MD5), watermark, IP address filter, basic and digest authentication for HTTP/HTTPS, WSSE and digest authentication for Open Network Video Interface, RTP/RTSP over HTTPS, control timeout settings, security audit log, TLS 1.2, host authentication (MAC address)
Network Storage	NAS (NFS, SMB/CIFS), Auto Network Replenishment (ANR), Together with high-end Hikvision memory card, memory card encryption and health detection are supported.
Client	iVMS-4200, Hik-Connect, Hik-Central
Web Browser	Plug-in required live view: IE 10, IE 11, Plug-in free live view: Chrome 57.0+, Firefox 52.0+, Edge 89+, Local service: Chrome 57.0+, Firefox 52.0+, Edge 89+
Image	
Image Parameters Switch	Yes
Image Settings	Saturation, brightness, contrast, sharpness, gain, white balance, adjustable by client software or web browser
Day/Night Switch	Day, Night, Auto, Schedule
Wide Dynamic Range (WDR)	120 dB
SNR	≥ 52 dB
Image Enhancement	BLC, HLC, 3D DNR
Privacy Mask	4 programmable polygon privacy masks
Interface	
Ethernet Interface	1 RJ45 10 M/100 M self-adaptive Ethernet port
On-Board Storage	Built-in memory card slot, support microSD/microSDHC/microSDXC card, up to 512 GB
Built-in Microphone	Yes
Built-in Speaker	Max. power consumption: 1.2 W, max. sound pressure level: 10 cm: 95 dB
Audio	1 input (line in), terminal block, max. input amplitude: 3.3 Vpp, input impedance: 4.7 KΩ, interface type: non-equilibrium, 1 output (line out), terminal block, max. output amplitude: 3.3 Vpp, output impedance: 100 Ω, interface type: non-equilibrium
Alarm	1 input, 1 output (max. 24 VDC, 1 A)
Reset Key	Yes
Event	
Basic Event	Motion detection (support alarm triggering by specified target types (human and vehicle)), alarm input and output, flashing alarm light output, audible alarm output, exception
Smart Event	Scene change detection

Linkage	Upload to FTP/NAS/memory card, notify surveillance center, send email, trigger alarm output, trigger recording, trigger capture, audible warning, white light flashing
Deep Learning Function	
Perimeter Protection	Line crossing, intrusion, region entrance, region exiting Support alarm triggering by specified target types (human and vehicle)
General	
Power	12 VDC ± 25%, 0.88 A, max. 10.5 W, Ø5.5 mm coaxial power plug, PoE: IEEE 802.3af, Class 3, 36 V to 57 V, 0.35 A to 0.22 A, max. 12.5 W
Material	Base: metal, cover: metal
Dimension	Ø140 mm × 145.6 mm (Ø5.5" × 5.7")
Package Dimension	230 mm × 230 mm × 230 mm (9" × 9" × 9")
Weight	Approx. 940 g (2.1 lb.)
With Package Weight	Approx. 1700 g (3.7 lb.)
Storage Conditions	-30 °C to 60 °C (-22 °F to 140 °F). Humidity 95% or less (non-condensing)
Startup and Operating Conditions	-30 °C to 60 °C (-22 °F to 140 °F). Humidity 95% or less (non-condensing)
Language	33 languages: English, Russian, Estonian, Bulgarian, Hungarian, Greek, German, Italian, Czech, Slovak, French, Polish, Dutch, Portuguese, Spanish, Romanian, Danish, Swedish, Norwegian, Finnish, Croatian, Slovenian, Serbian, Turkish, Korean, Traditional Chinese, Thai, Vietnamese, Japanese, Latvian, Lithuanian, Portuguese (Brazil), Ukrainian
General Function	Anti-banding, heartbeat, flash log, pixel counter
Flashing Light	Yes
Approval	
EMC	FCC: 47 CFR Part 15, Subpart B, CE-EMC: EN 55032: 2015, EN 61000-3-2:2019, EN 61000-3-3: 2013+A1:2019, EN 50130-4: 2011 +A1: 2014, RCM: AS/NZS CISPR 32: 2015, IC: ICES-003: Issue 7
Safety	UL: UL 62368-1, CB: IEC 62368-1: 2014+A11, CE-LVD: EN 62368-1: 2014/A11: 2017
Environment	CE-RoHS: 2011/65/EU, WEEE: 2012/19/EU, Reach: Regulation (EC) No 1907/2006
Protection	IP67: IEC 60529-2013

▪ Typical Application

Hikvision products are classified into three levels according to their anti-corrosion performance. Refer to the following description to choose for your using environment.

This model has NO SPECIFIC PROTECTION.

Level	Description
Top-level protection	Hikvision products at this level are equipped for use in areas where professional anti-corrosion protection is a must. Typical application scenarios include coastlines, docks, chemical plants, and more.
Moderate protection	Hikvision products at this level are equipped for use in areas with moderate anti-corrosion demands. Typical application scenarios include coastal areas about 2 kilometers (1.24 miles) away from coastlines, as well as areas affected by acid rain.
No specific protection	Hikvision products at this level are equipped for use in areas where no specific anti-corrosion protection is needed.

▪ Available Model

DS-2CD2346G2P-ISU/SL(2.8mm)(C)

DS-2CD2346G2P-ISU/SL(2.8mm)(C)/O1

▪Dimension

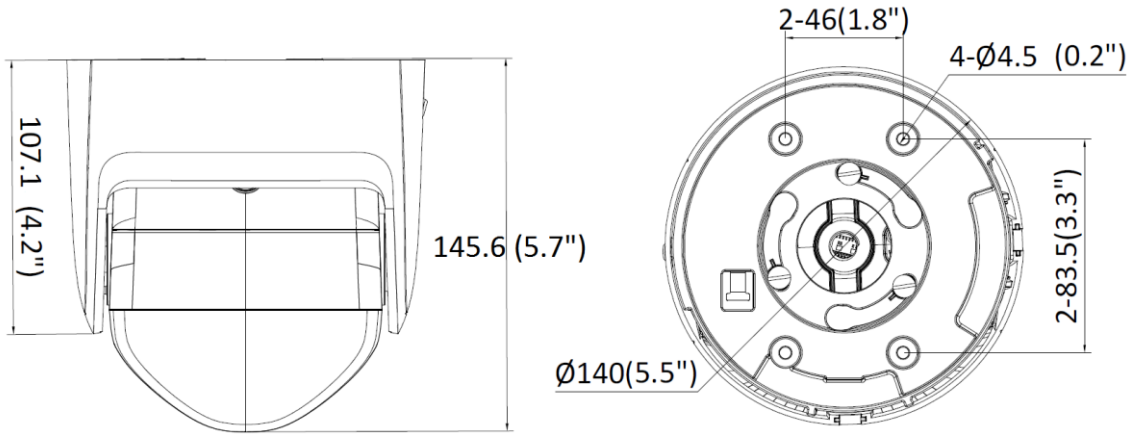

Unit: mm(inch)

▪ Accessory

▪ Optional

WML+PC140 Wall mount	- CPM+PC140 Pendant Mount

Note: This model does not require an additional conduit base, as its structure itself already has one built-in.

Headquarters
No.555 Qianmo Road, Binjiang District,
Hangzhou 310051, China
T +86-571-8807-5998
www.hikvision.com

Follow us on social media to get the latest product and solution information.

Hikvision HikvisionHQ HikvisionHQ Hikvision_Global Hikvision Corporate Channel hikvisionhq

© Hangzhou Hikvision Digital Technology Co., Ltd. Unless otherwise agreed, Hikvision makes no warranties, express or implied. We reserve the right to introduce modifications without notice.