# Z-MAX™ Patch Panel Instructions

Z-MAX - 24 port panel (shown throughout)

Z-MAX - 48 port panel

Z-MAX - Angled 48 port panel

Z-MAX - Angled 48 port panel

## Tools Required

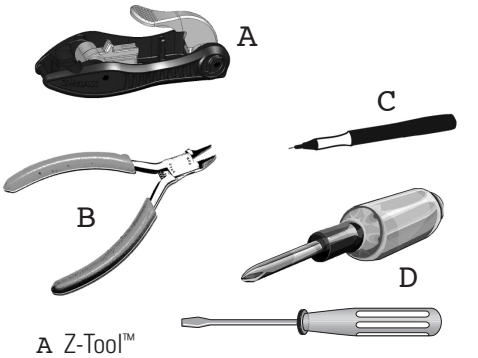


A Z-Tool™
B Cutter (CI-Cutter)
C Permanent Marker
D Philips and Flathead Screwdrivers

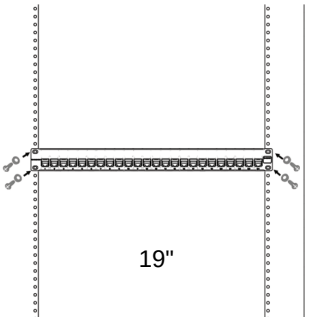


1

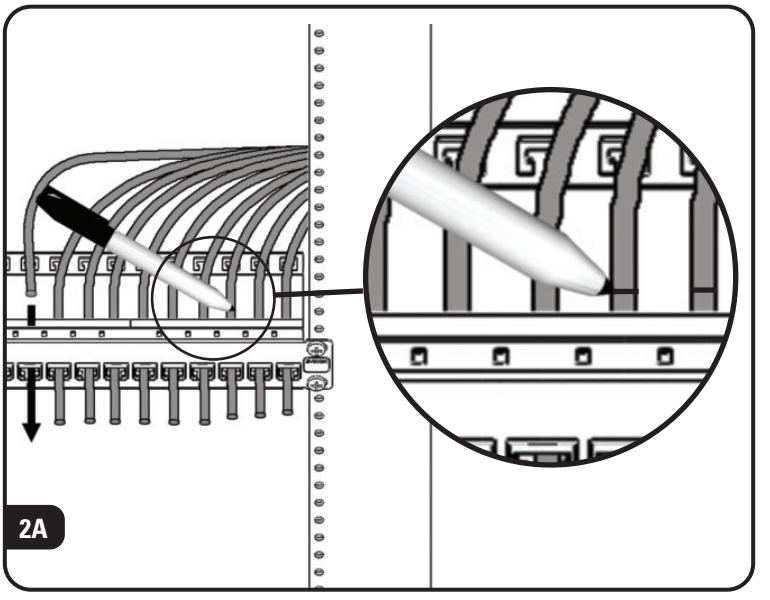

2A

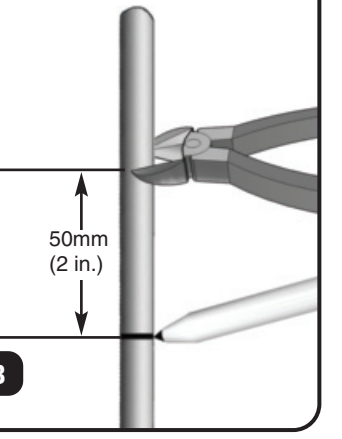


2B

## See Z-MAX Outlet Instructions

- INS_100.18077.00 **(FUTP)**
- INS_100.18080.00 **(UTP)**

2C

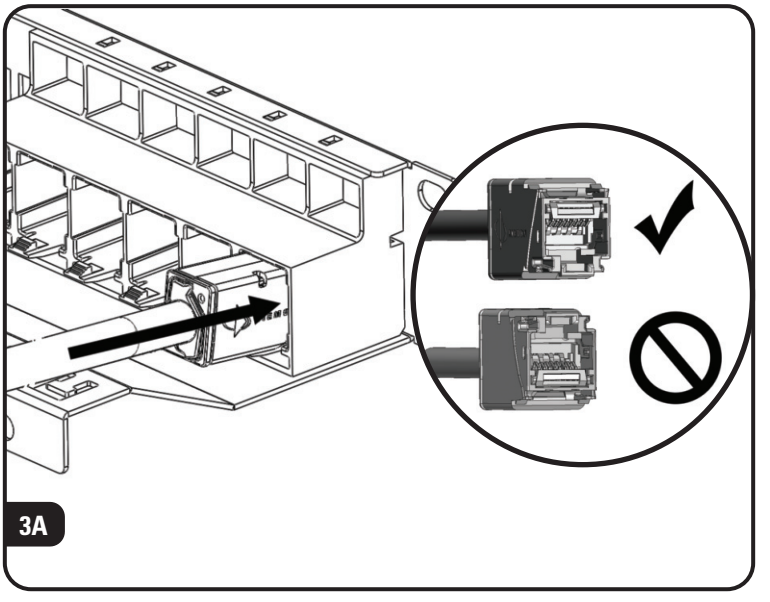

3A

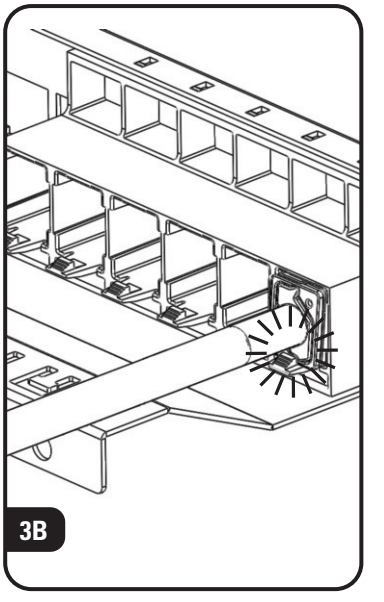

3B

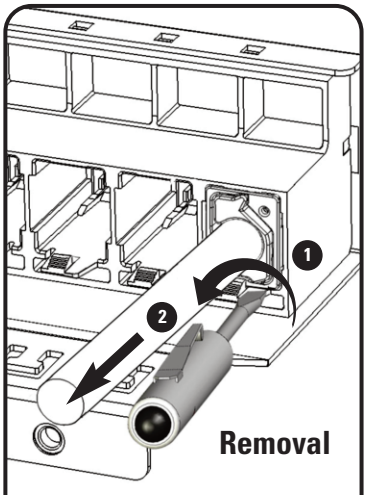


4 (Depress latch or wedge and twist as shown)

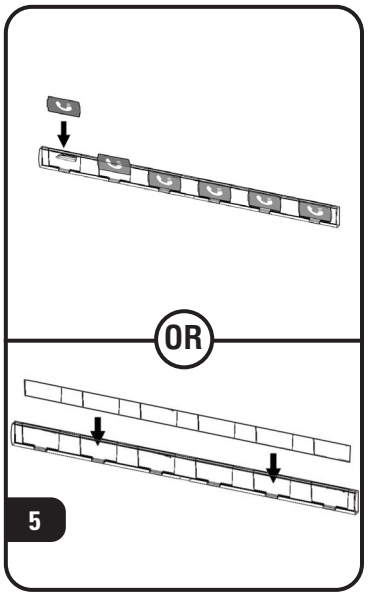


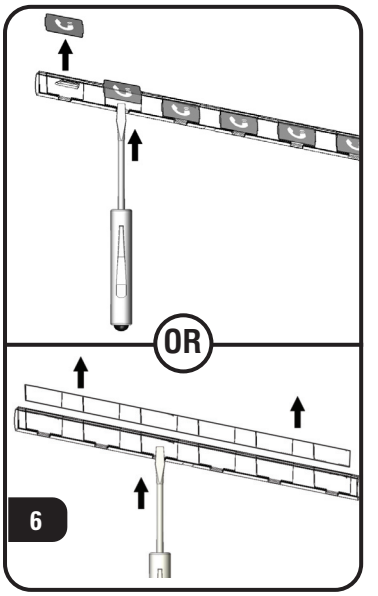


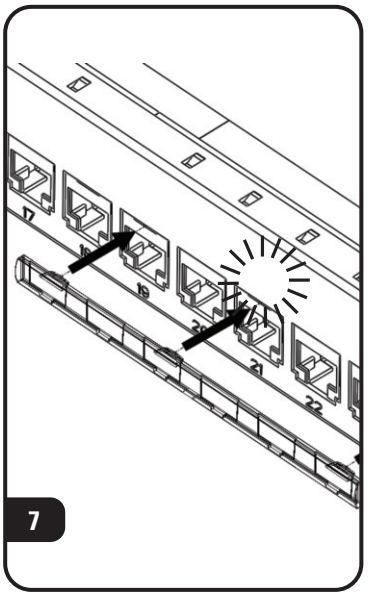


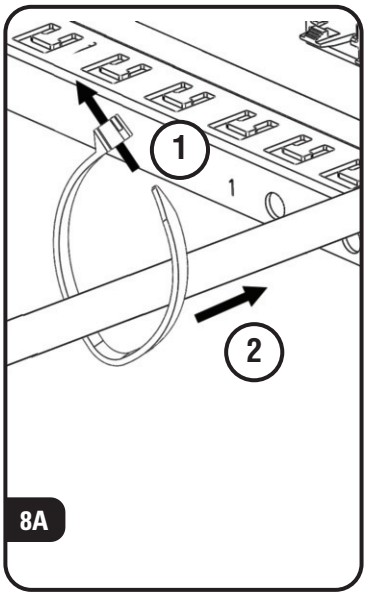


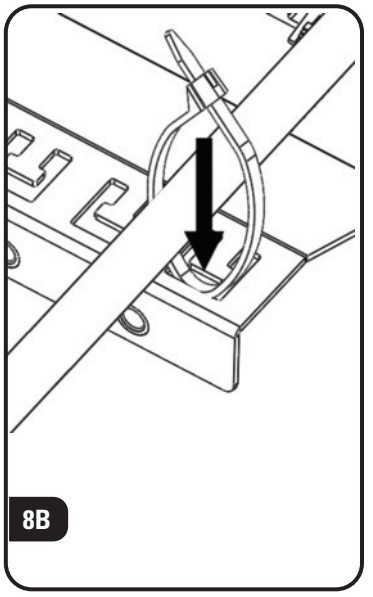


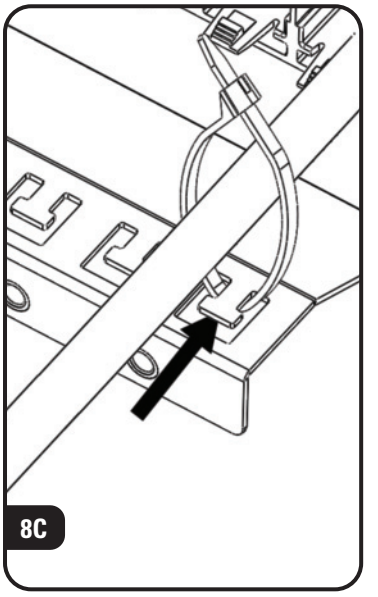


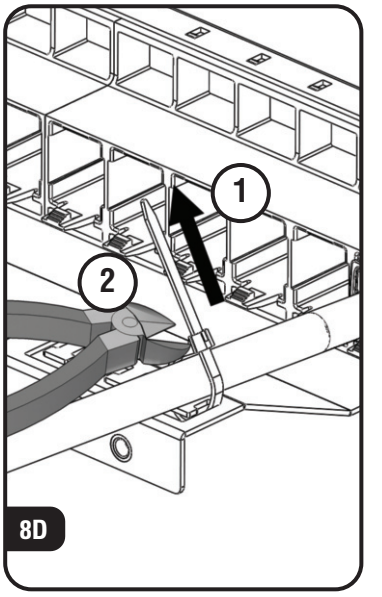


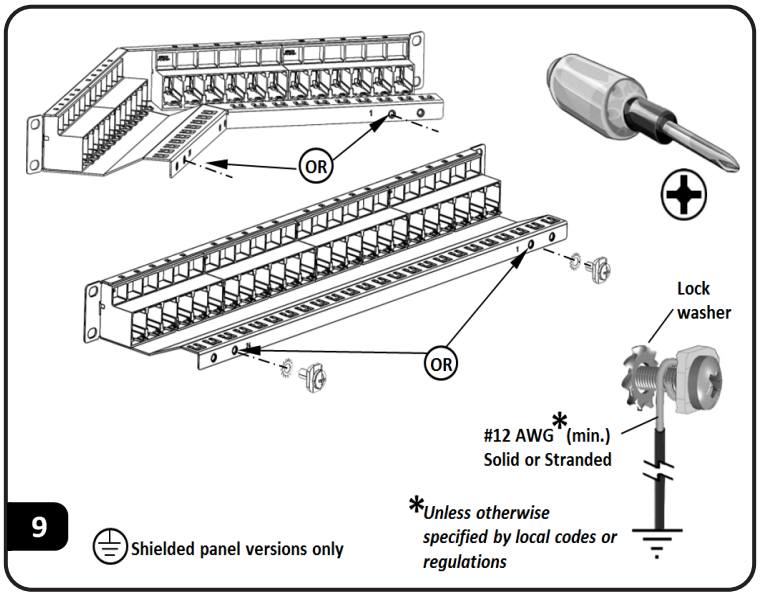


**To assist safe installations, comply with the following:**

A. Use caution when installing or modifying telecommunications circuits.
B. Never touch uninsulated wire terminals unless the circuit has been disconnected.
C. Never install this device in a wet location.
D. Never install wiring during a lightning storm.

**Lors de l'installation, respectez les consignes de sécurité suivantes:**

A. Utiliser avec prudence lors de l'installation ou de la modification circuits de télécommunications.
B. Ne jamais toucher les bornes de fil métallique non isolés sauf si le circuit a été débranché.
C. Ne jamais installer cet appareil dans un endroit humide.
D. Ne jamais installer pendant un orage.

*To ensure you have the latest revision to this document, please visit:* ***http://www.siemon.com/us***

INS_100.18196.00 Rev. C 5/14

**Global Headquarters**
Watertown, Connecticut USA
Tel: (1) 866-548-5814

For a complete listing of our global offices visit our web site

SIEMON™
www.siemon.com

© 2014 Siemon