EN

TECHNICAL
MANUAL

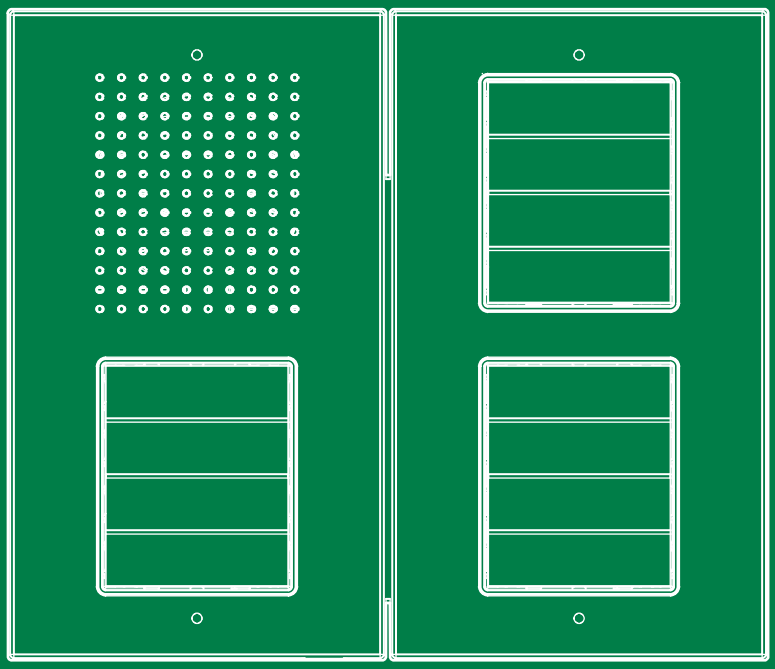

Ciao outdoor entrance panel

Art. CA2100A - CA2200

Comelit®
Passion.Technology.Design.

Warning

- This Comelit product has been designed and manufactured for use in the creation of audio and video communication systems in residential, commercial, industrial and public buildings.
- All activities connected to the installation of Comelit products must be carried out by qualified technical personnel, with careful observation of the indications provided in the Manuals / Instruction sheets supplied with those products.
- Disconnect the power supply before carrying out any operations on the wiring.
- Use wires with a cross-section suited to the distances involved, observing the instructions provided in the system manual.
- We advise against running the system wires through the same duct as power cables (230V or higher).
- To ensure Comelit products are used safely:
  - carefully observe the indications provided in the Manuals / Instruction sheets,
  - make sure the system created using Comelit products has not been tampered with / damaged.
- Comelit products do not require maintenance aside from routine cleaning, which should be carried out in accordance with the indications provided in the Manuals / Instruction sheets.
- Any repairs must be carried out:
  - for the products themselves, exclusively by **Comelit Group S.p.A.**,
  - for the systems, by qualified technical personnel.
- **Comelit Group S.p.A.** accepts no liability for:
  - any purpose other than the intended use,
  - failure to observe the indications and warnings contained in this Manual / Instruction sheet.
- **Comelit Group S.p.A.** reserves the right to change the information provided in this Manual / Instruction Sheet at any time and without prior notice.

Table of contents

Description 3
- Art. CA2100A 3
- Art. CA2200 4

Technical specifications 4
- Art. CA2100A 4
- Art. CA2200 5

Installing entrance panel art. CA2100A 6

Changing nameplates 6

Installing entrance panel art. CA2100A with button module art. CA2200 7

Connections 9
- Variants 9

Programming call addresses other than the pre-programmed options 10

Smart programming of consecutive addresses 10

Programming of specific addresses 11

Special programmes 13

Operating notes 14

System performance and layouts 14

Addressing table 15

Description

Ciao series outdoor audio entrance panel for Simplebus2 system, designed for systems from 1 to 8 calls.

- *Technopolymer front cover offering resistance to atmospheric agents (protection rating IP54 and coating with anti-UV treatment) and acts of vandalism (protection rating IK08).*
- *Smart button programming function.*
- *Surface-mount installation support included.*
- *Buttons for configurations with 1, 2, 4 or 8 calls available to purchase separately.*

Art. CA2100A

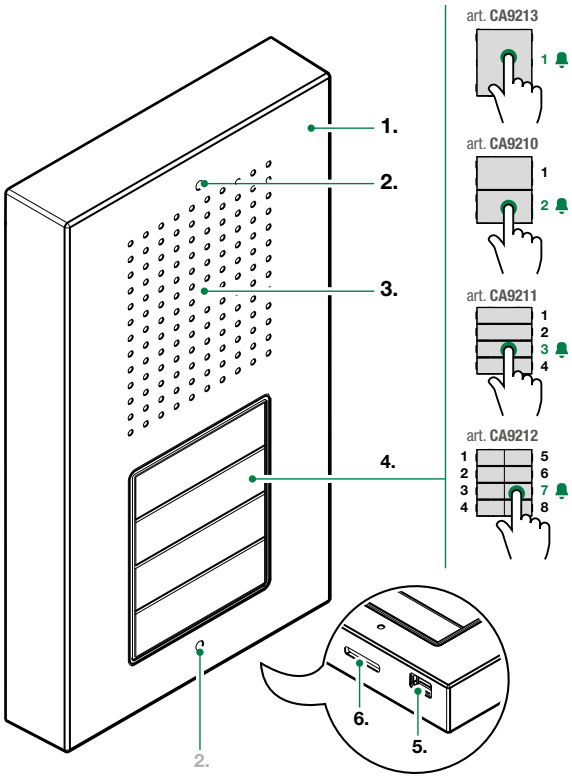

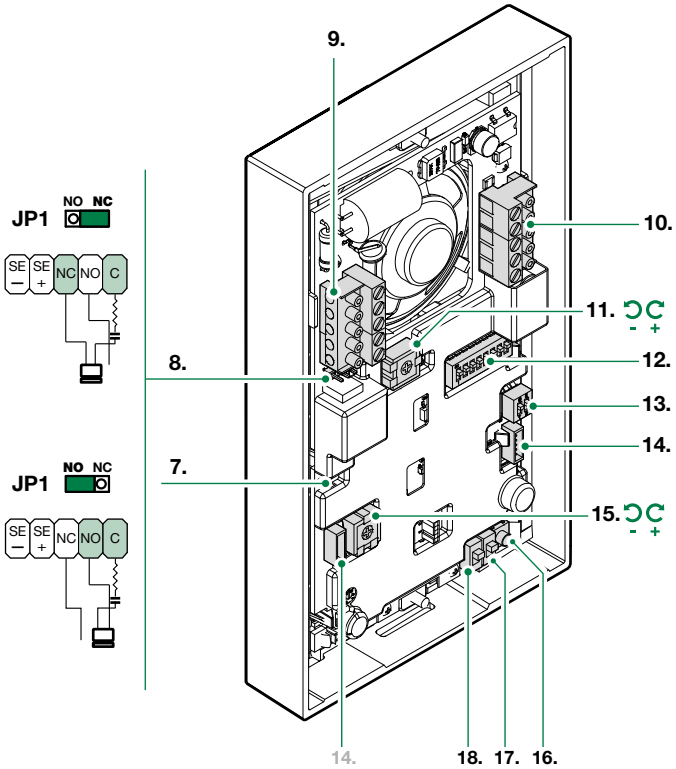

1. Technopolymer cover
2. Faceplate fixing screw holes
3. Loudspeaker
4. Call buttons 1 / 2 / 4 / 8 users (available to purchase separately)
5. Microphone
6. Condensation drainage hole
7. **CV2** jumper to be removed when switching off the button lighting
8. **JP1** enabling the RC network for door lock filter on relay contacts
9. Terminal block for **J4**connection:
   SE- SE+ connection for electric door lock
   NC NO C relay contacts
10. Terminal block for **J3**connection:
    L L bus line connection
    COM RTE and DO reference negative
    DO door open indication
    RTE request to exit button
11. **LED** button brightness control trimmer
12. **S2** DIP-switches for button addressing and special function programming
13. **S1** DIP-switches for button type configuration (1 / 2 / 4 / 8 users)
14. **J2** and **J5** 6-pole connectors for button module connection
15. **SPK** loudspeaker volume adjustment trimmer
16. **SW1** programming confirmation button
17. **PRC** call address programming input/output switch
18. **PRS** special programming input/output switch

Art. CA2200

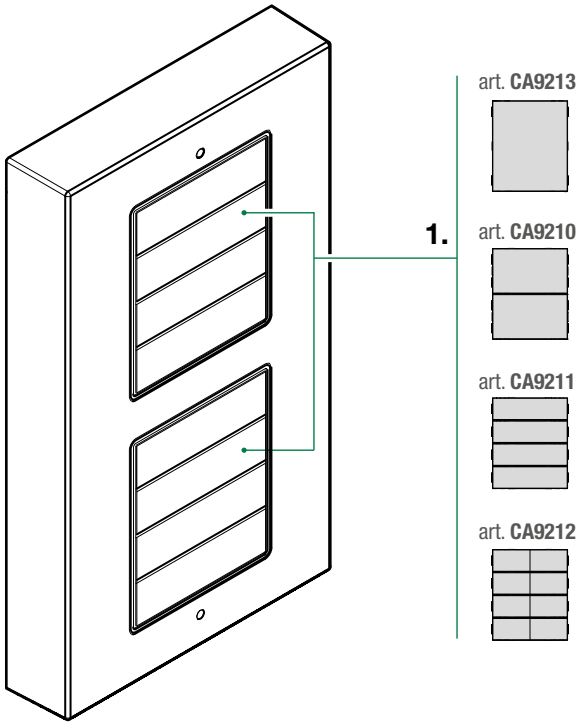

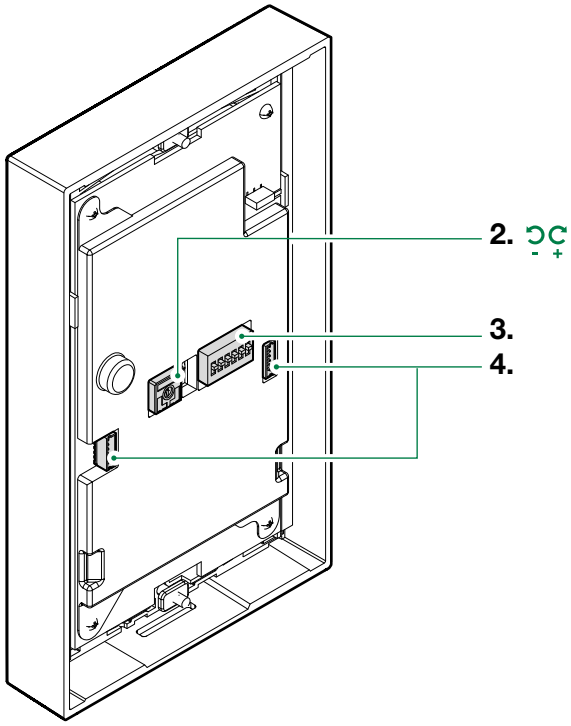

1. Call buttons 1 / 2 / 4 / 8 users (available to purchase separately)
2. **TM1** button brightness control/switch-off trimmer
3. **S1** dip switch for button type configuration (1 / 2 / 4 / 8 users) and button module addressing
4. **J1 and J2** 6-pole connectors for connection of art. CA2100A / CA2200

Technical specifications

Art. CA2100A

GENERAL DATA	
Type	Monolithic
Height (mm)	172
Width (mm)	100
Depth (mm)	28
Product colour	Grey RAL 9006
Coating material type	Technopolymers
Surface mounting	Yes

COMPATIBLE SYSTEMS
Simplebus2 audio with power supply unit art. 1210/1210A

AUDIO SPECIFICATIONS	
Microphone	4 (ø), omnidirectional
Loudspeaker	50 mm (Ø), 8 Ohm, 0.2W

ELECTRICAL SPECIFICATIONS	
Type of power supply	Power supply via video entry bus
Power supply voltage	33 VDC
Absorption in standby (W)	1.7
Maximum absorption (W)	7.6

HARDWARE CHARACTERISTICS	
Call type	Buttons
Type of buttons	Mechanical
Number of buttons (no.)	8
Backlighting colour	White
Terminals	L L COM DO RTE C NO NC SE+ SE
Removable terminals	Yes
Number of inputs (no.)	2
Number of outputs (no.)	1

SETTINGS	
Backlighting brightness	Yes
Loudspeaker volume	Yes

ENVIRONMENTAL AND CONFORMITY SPECIFICATIONS	
IP protection rating	IP54
IK anti-vandal protection rating	IK08
Operating temperature (°C)	-25 to 55
Operating humidity (max RH - %)	20 to 95
Environmental class	IV
CE certification	RoHS II - 2011/65/EU (EN 50581:2012), EMC 2014/30/EU (EN 61000-6-1:2007, EN 61000-6-3:2007+A1:2011)

Art. CA2200

GENERAL DATA	
Type	Monolithic
Height (mm)	172
Width (mm)	100
Depth (mm)	28
Product colour	Grey RAL 9006
Surface mounting	Yes

COMPATIBLE SYSTEMS
Simplebus2 audio with power supply unit art. 1210/1210A

ELECTRICAL SPECIFICATIONS	
Type of power supply	Power supply via video entry bus
Power supply voltage	33 VDC
Absorption in standby	0.62
Maximum absorption (W)	0.62

HARDWARE CHARACTERISTICS	
Call type	Buttons
Type of buttons	Mechanical
Number of buttons (no.)	16
Backlighting colour	White

SETTINGS	
Backlighting brightness	Yes

ENVIRONMENTAL AND CONFORMITY SPECIFICATIONS	
IP protection rating	IP54
IK anti-vandal protection rating	IK08
Operating temperature (°C)	-25 to 55
Operating humidity (max RH - %)	25 to 95
Environmental class	IV
CE certification	RoHS II - 2011/65/EU (EN 50581:2012), EMC 2014/30/EU (EN 61000-6-1:2007, EN 61000-6-3:2007+A1:2011)

Installing entrance panel art. CA2100A

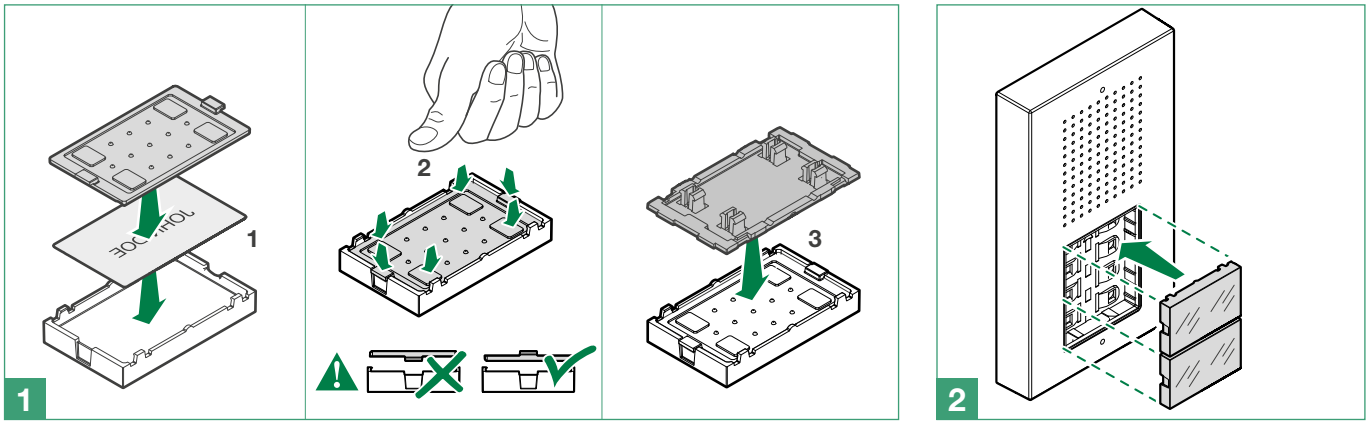

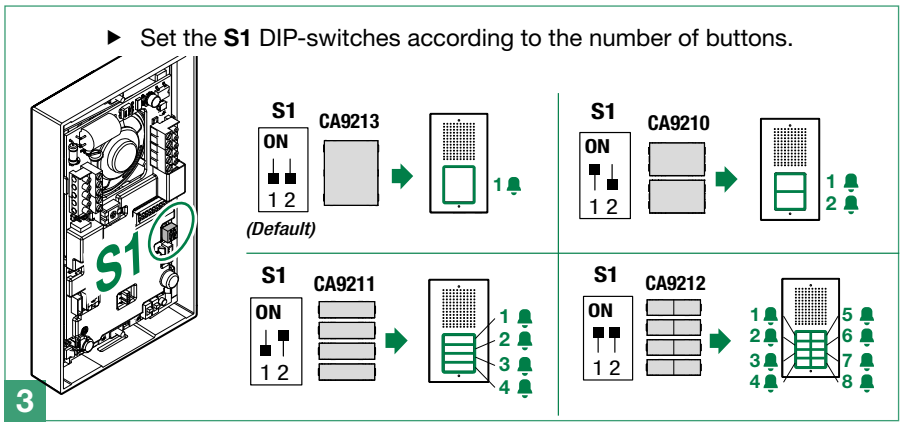

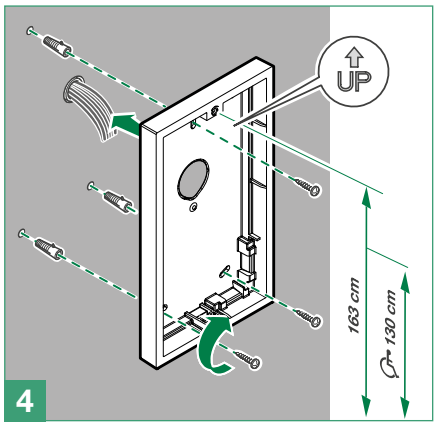

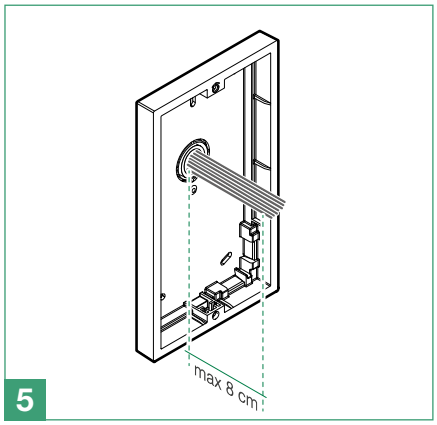

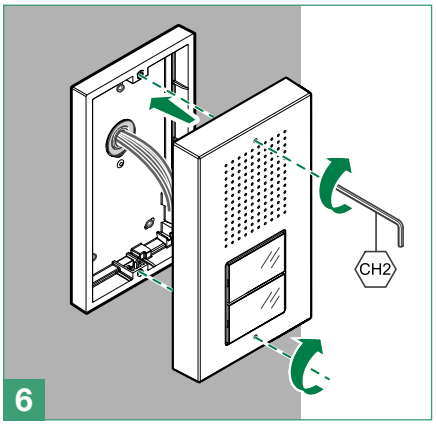

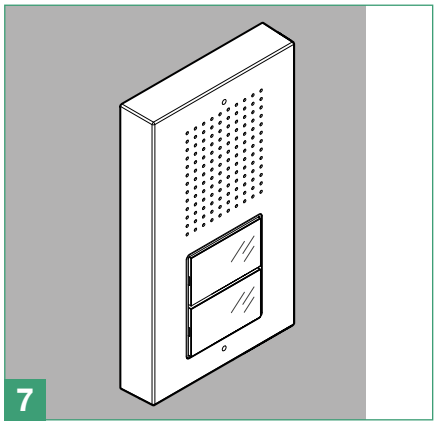

Changing nameplates

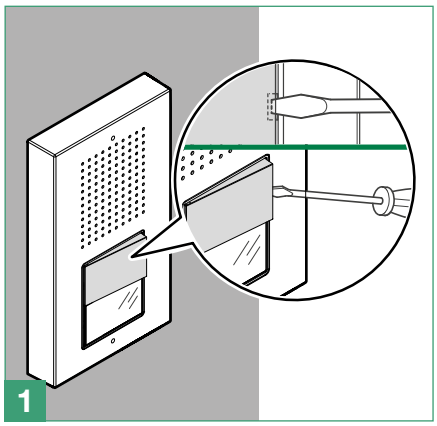

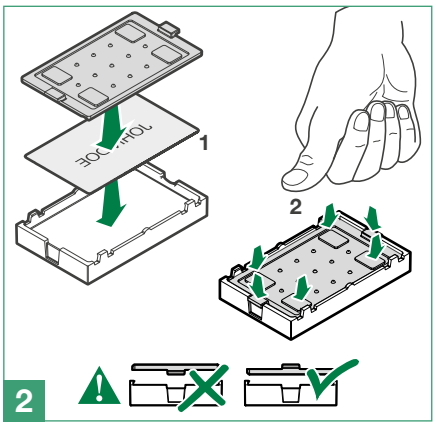

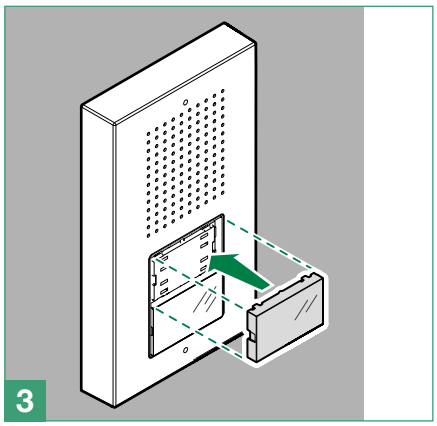

Installing entrance panel art. CA2100A with button module art. CA2200

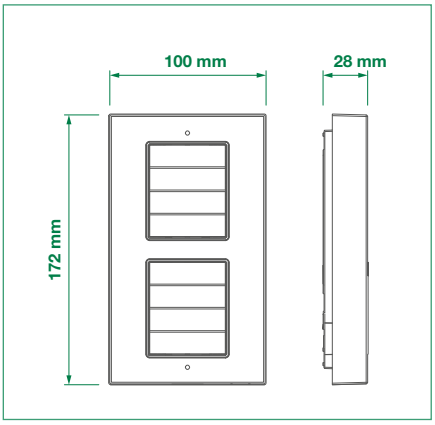

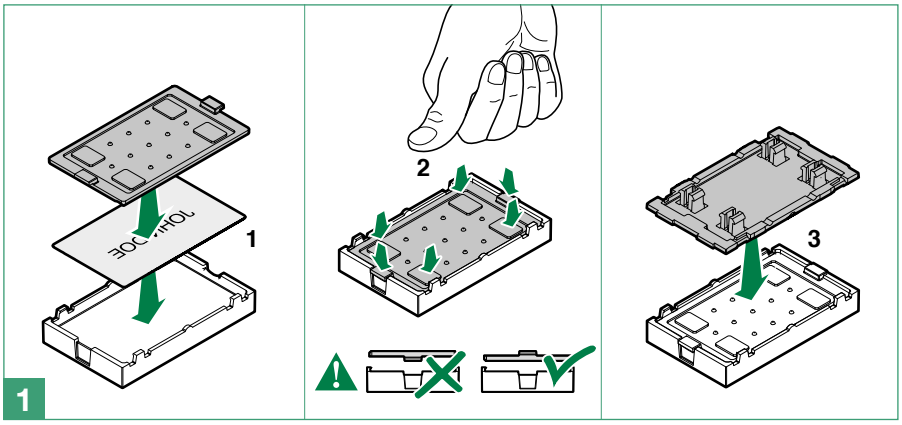

▶ Set the **S1** DIP-switches according to the number of buttons.

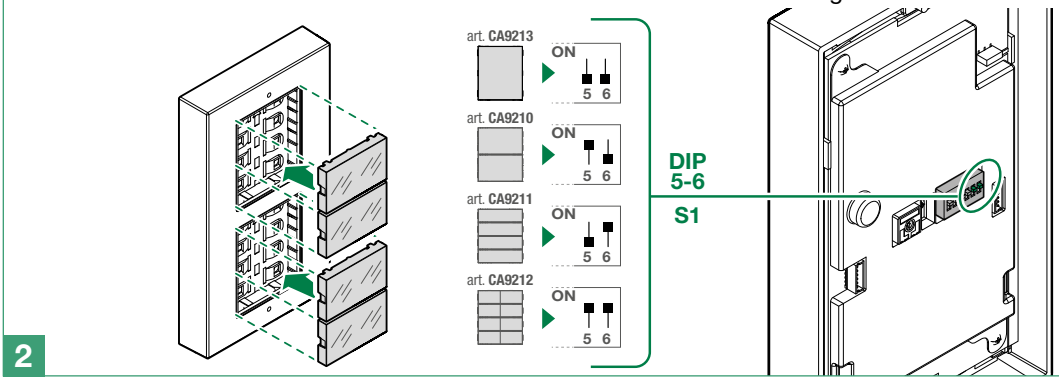

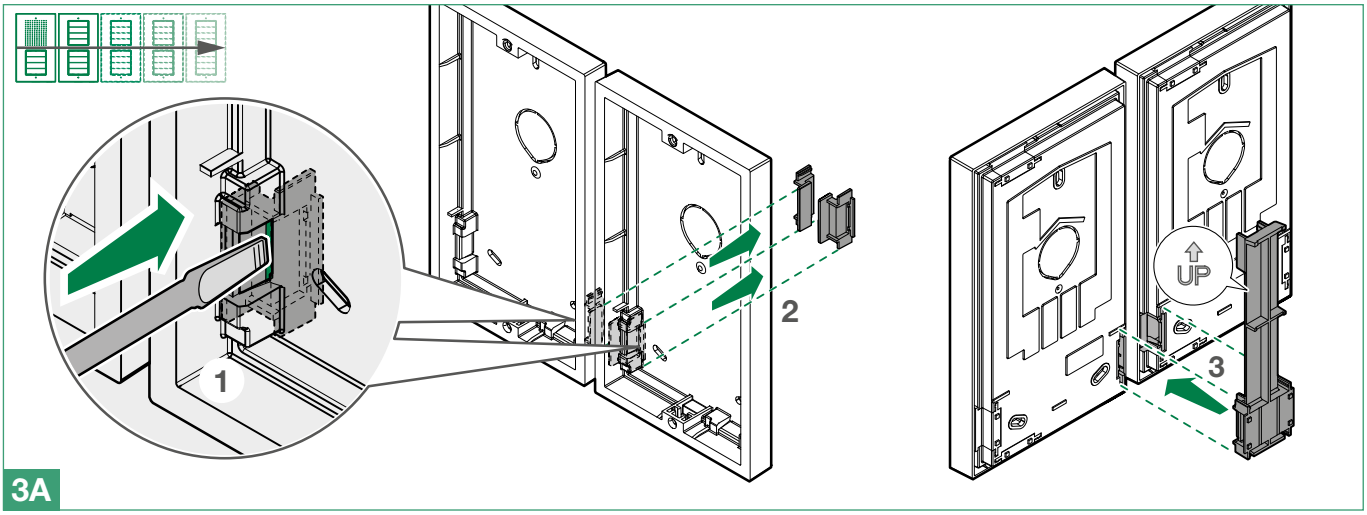

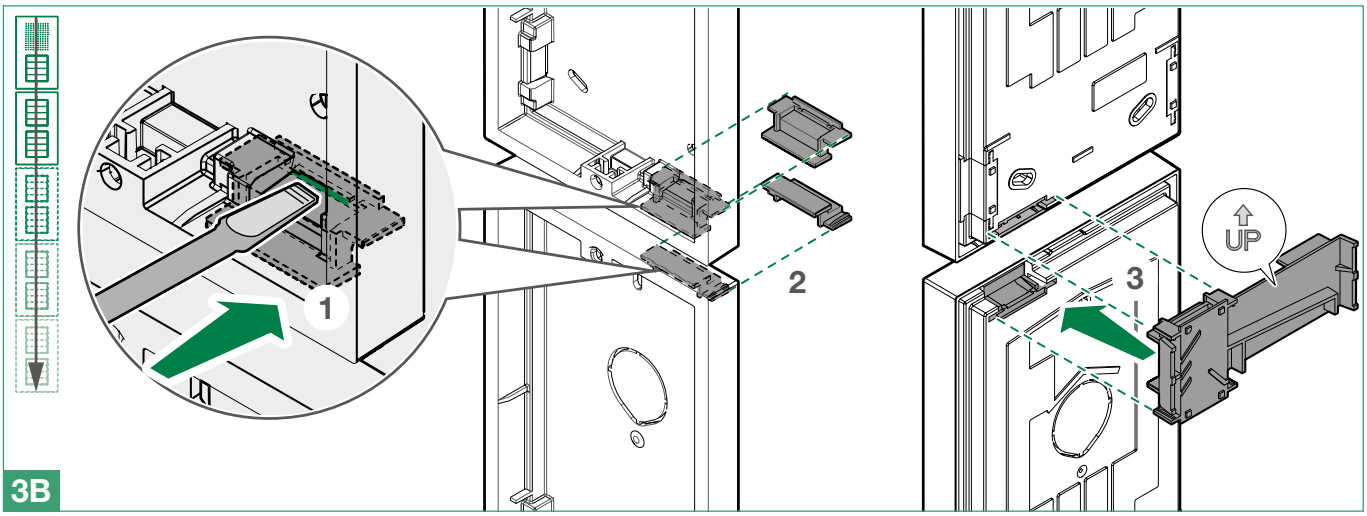

The addressing of button modules allows, if a module art. CA2200 is replaced, just the address of the replaced module art. CA2200 to be programmed, without having to reprogram all the buttons.

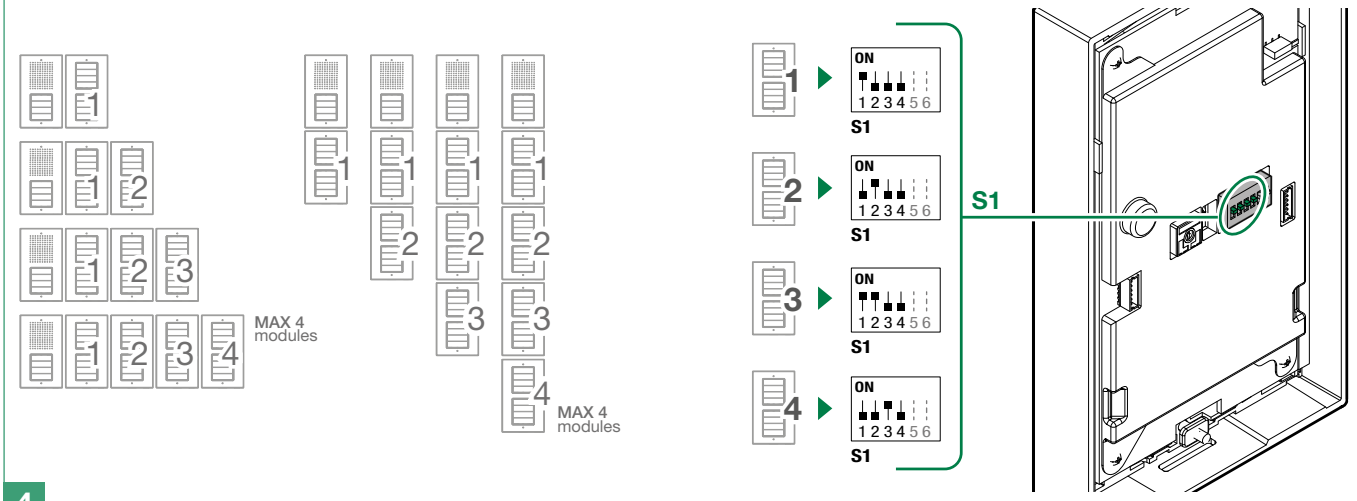

4

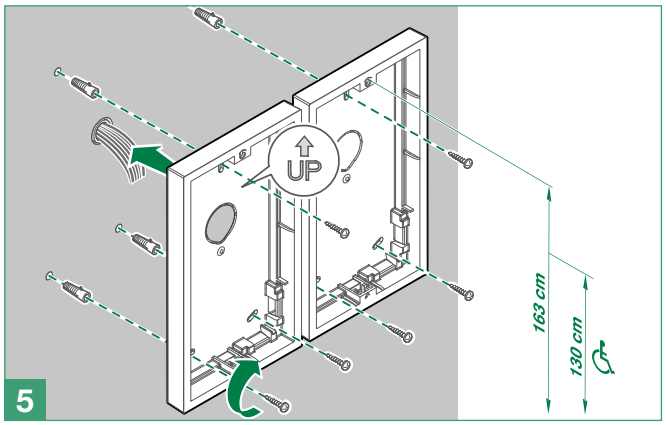

5

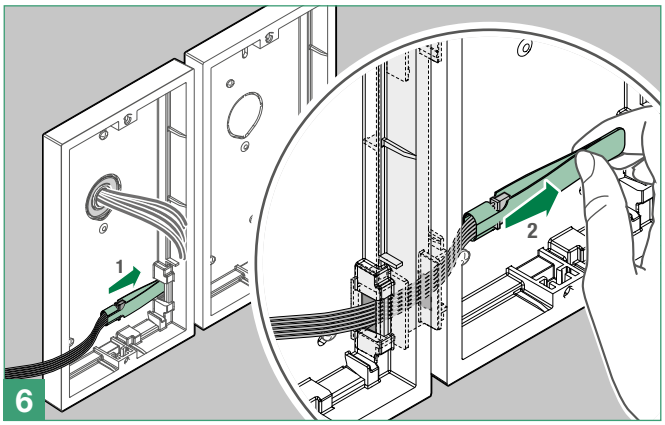

6

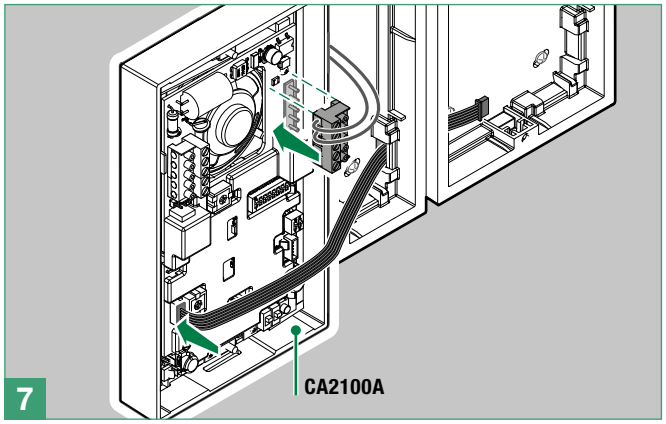

7

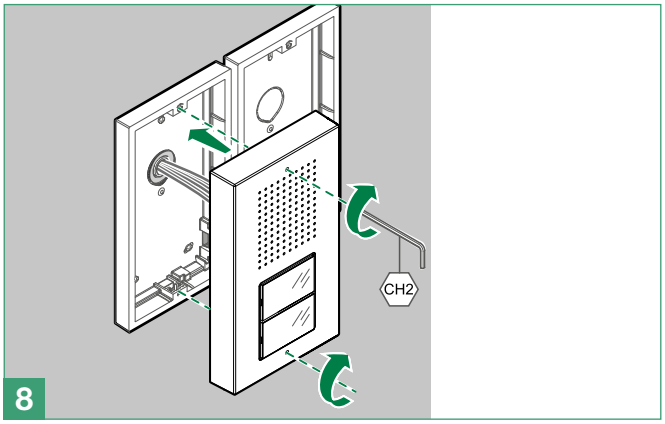

8

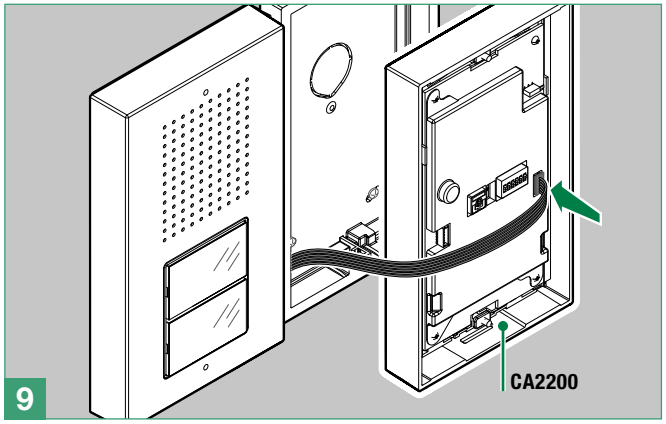

9

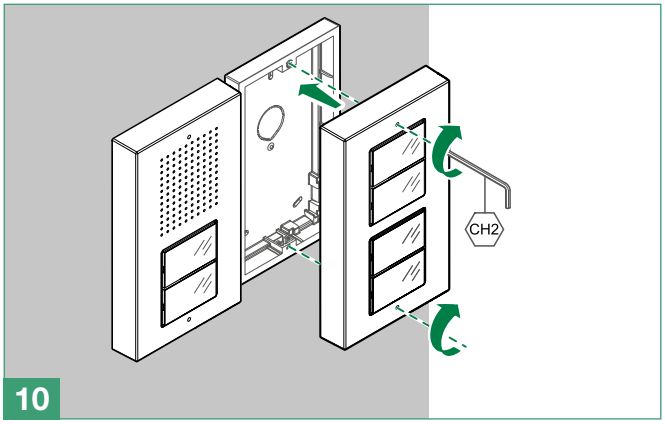

10

Connections

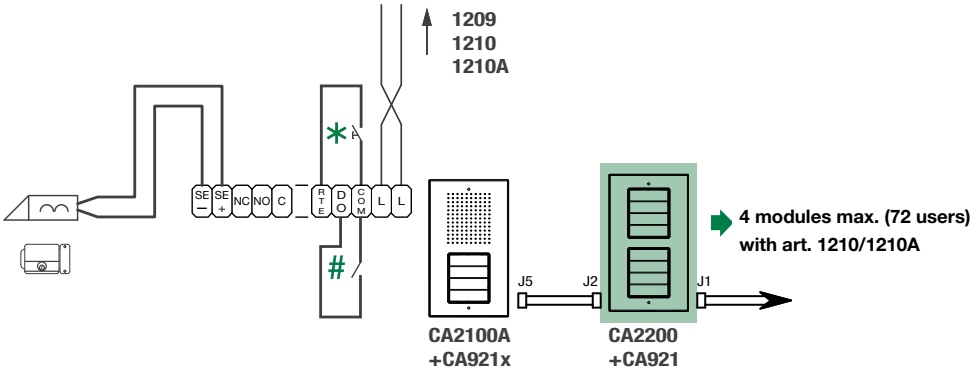

* **Max 20 m.** Local door-opener button.

\# **Max 20 m.** Active input closed for DOOR OPEN signal.

Variants

Variant for using the external unit relay

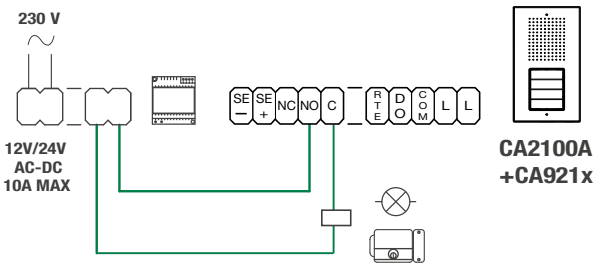

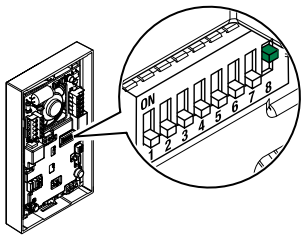

C.NC.NO relay activation on actuator command: 2 sec.

Set DIP-switches in permanent mode as shown in figure

Variant for using a safety door lock

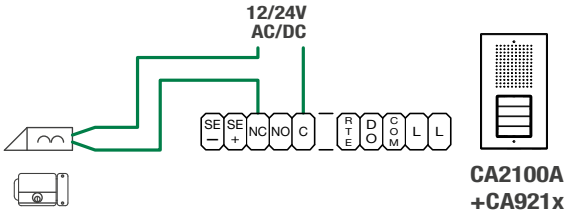

JP1 enabling the RC network for door lock filter on relay contacts

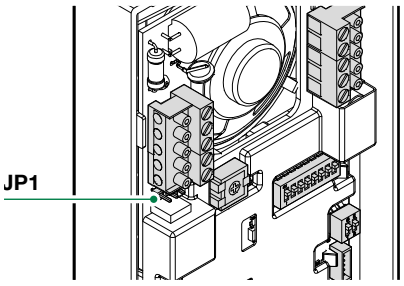

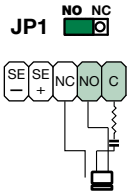

On C. NO. contacts

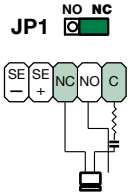

On C. NC. contacts

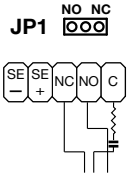

Excluded: voltage-free contact

Programming call addresses other than the pre-programmed options

There are 2 programming methods:

- ***Smart programming of consecutive addresses:*** allows quick programming of buttons with consecutive addresses (e.g.: 5, 6, 7, 8)
- ***Programming of specific addresses:*** allows programming of specific addresses (e.g.: 25, 37, 70, 58)

Smart programming of consecutive addresses

The programming procedures must be carried out in the specified order

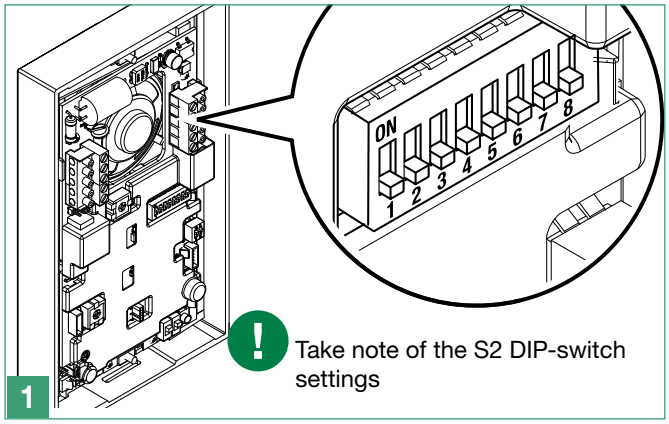

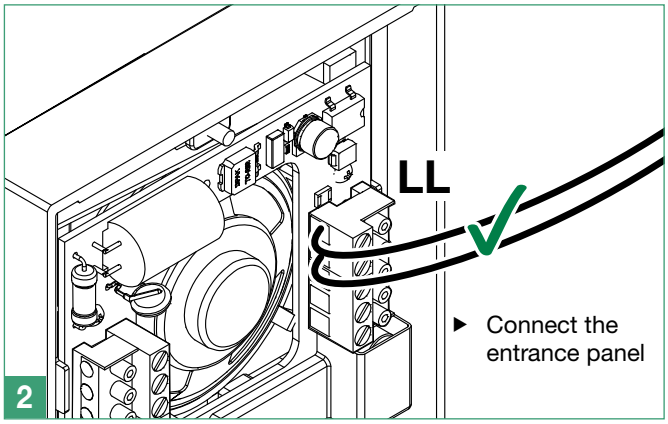

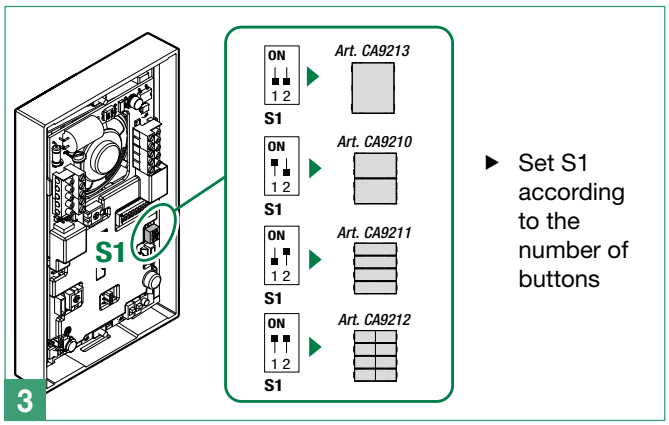

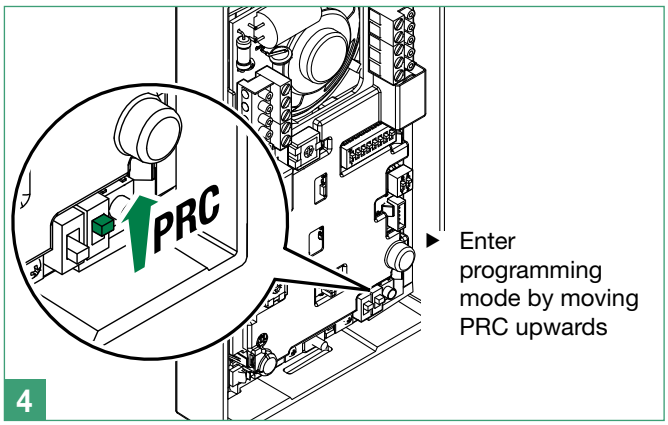

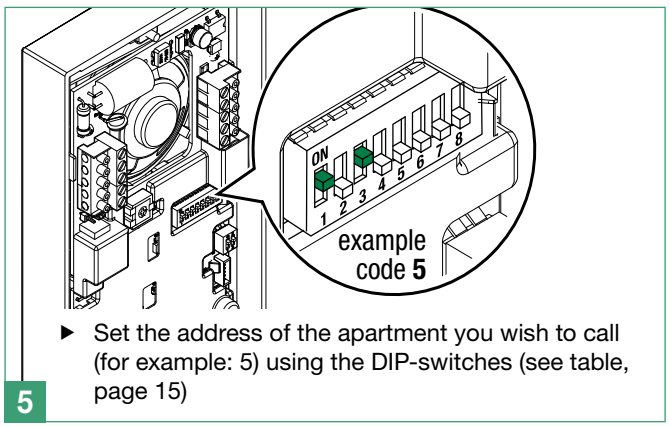

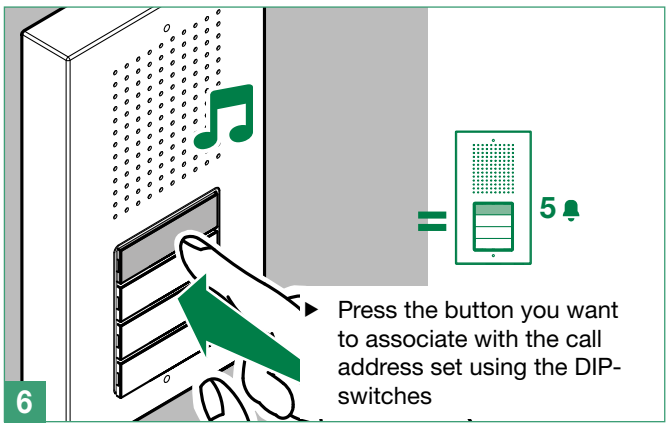

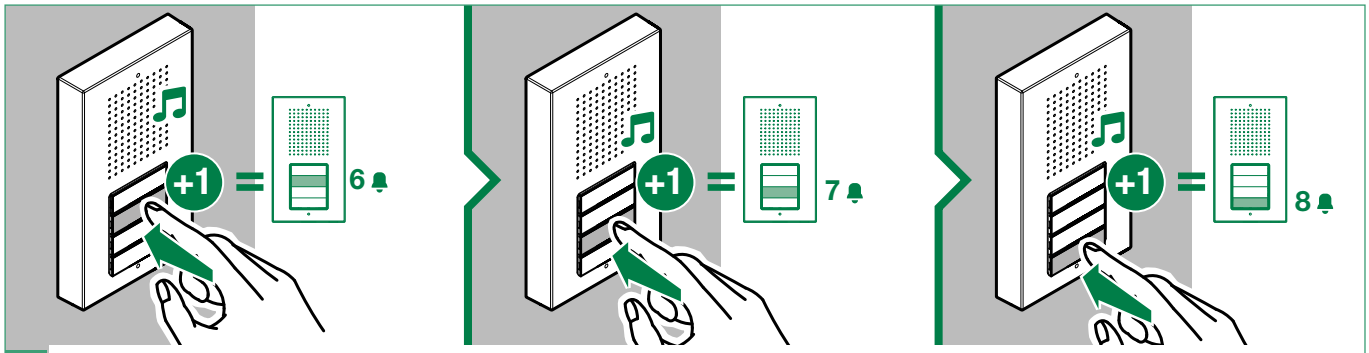

7 ▶ Press the following buttons to assign consecutive addresses; every time a button is pressed the address will be increased by 1

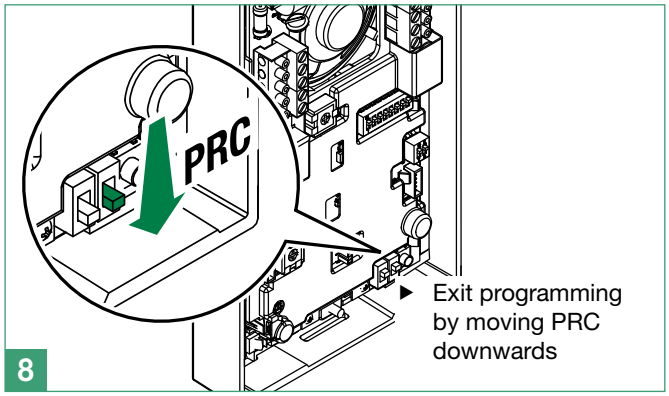

8 ▶ Exit programming by moving PRC downwards

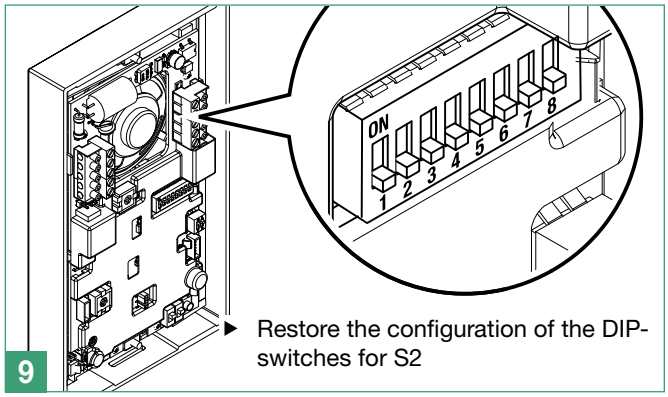

9 ▶ Restore the configuration of the DIP-switches for S2

Programming of specific addresses

! The programming procedures must be carried out in the specified order

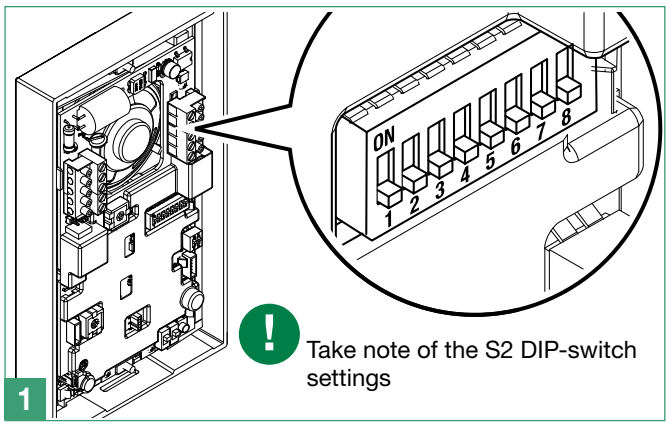

1 ! Take note of the S2 DIP-switch settings

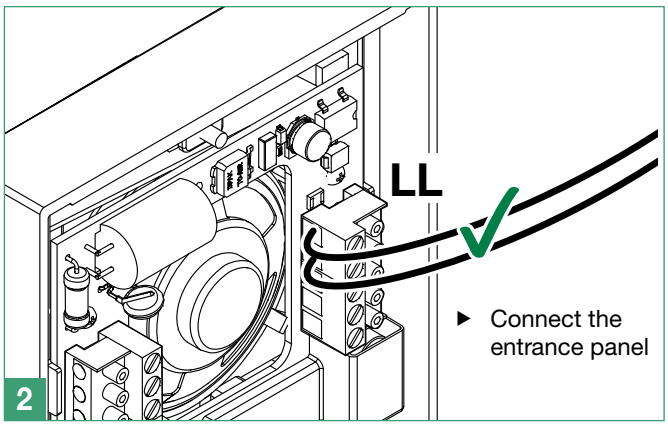

2 ▶ Connect the entrance panel

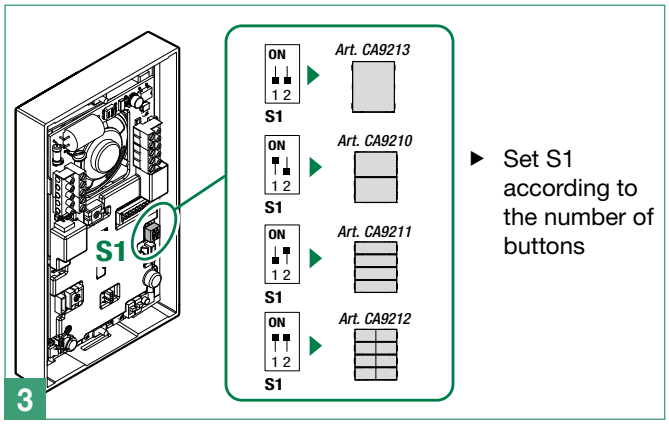

3 ▶ Set S1 according to the number of buttons

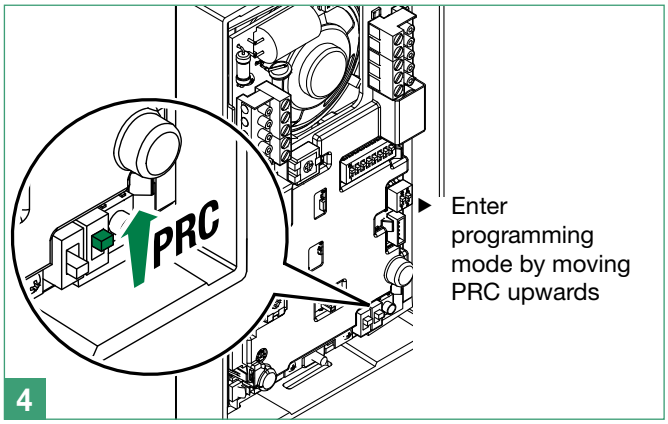

4 ▶ Enter programming mode by moving PRC upwards

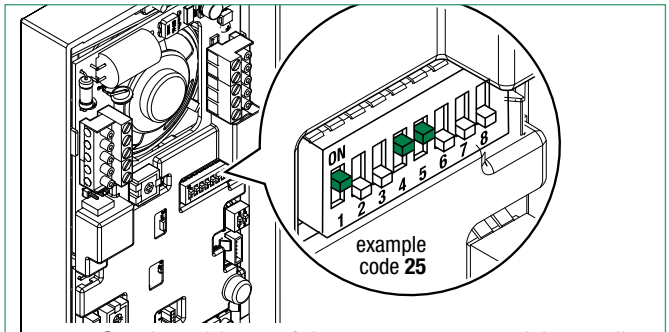

5 ▶ Set the address of the apartment you wish to call (for example: 25) using the DIP-switches (see table, page 15)

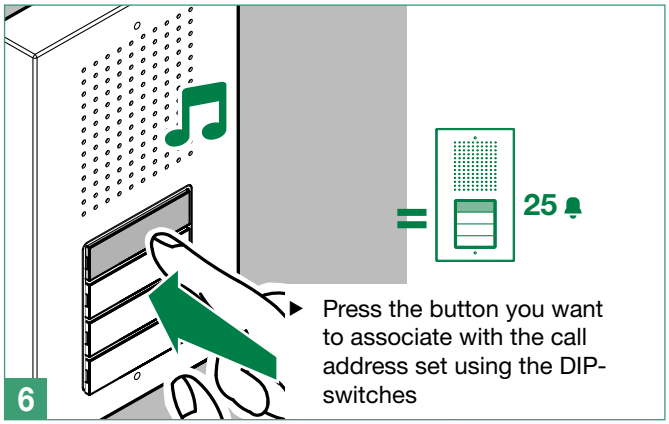

6 ▶ Press the button you want to associate with the call address set using the DIP-switches

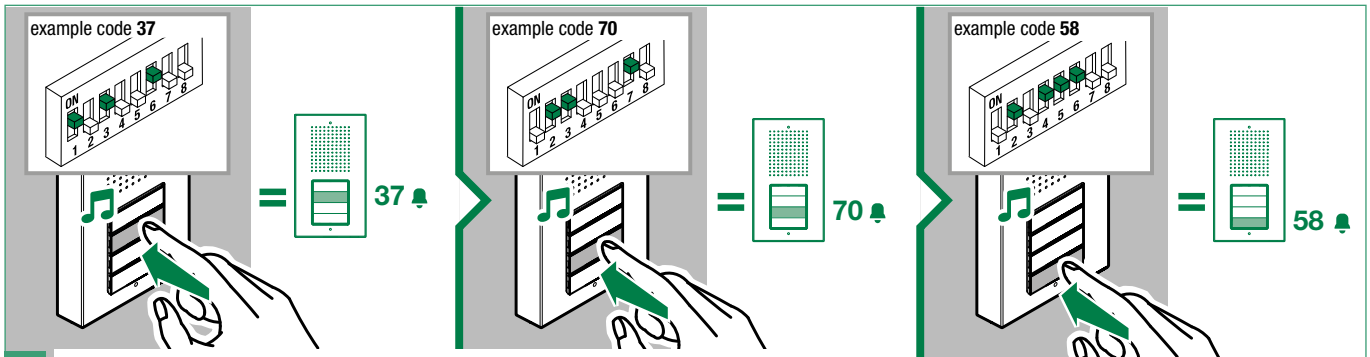

7 ▶ Repeat steps 4 and 5 to assign a specific address to each button

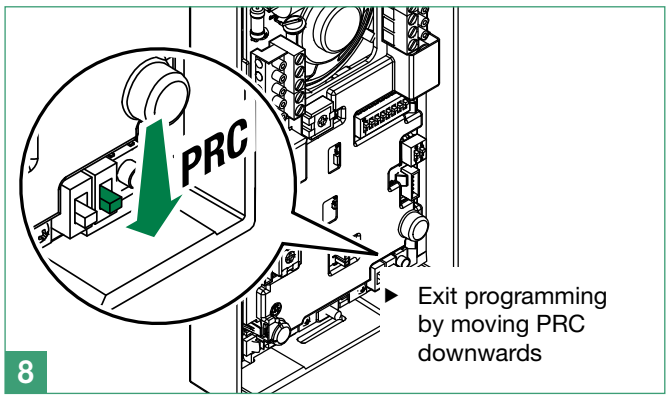

8 ▶ Exit programming by moving PRC downwards

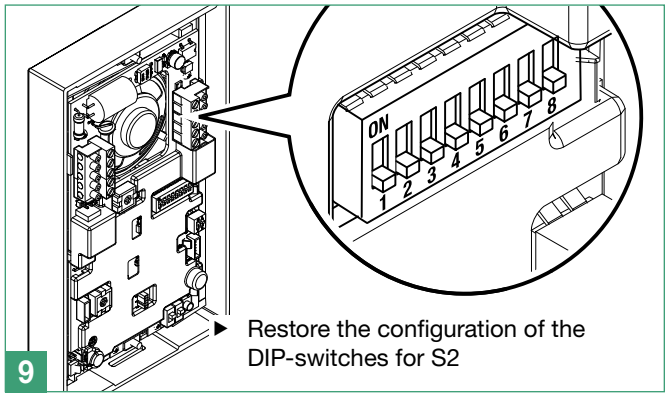

9 ▶ Restore the configuration of the DIP-switches for S2

Special programmes

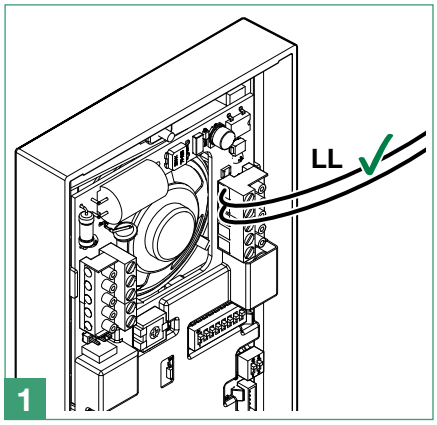

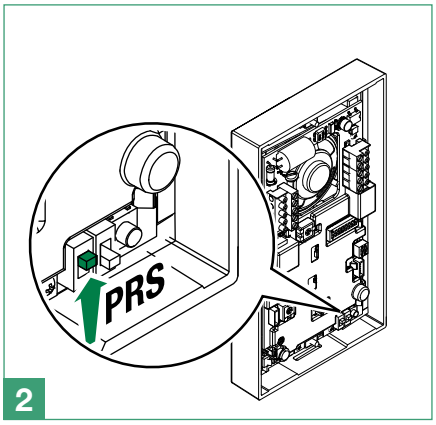

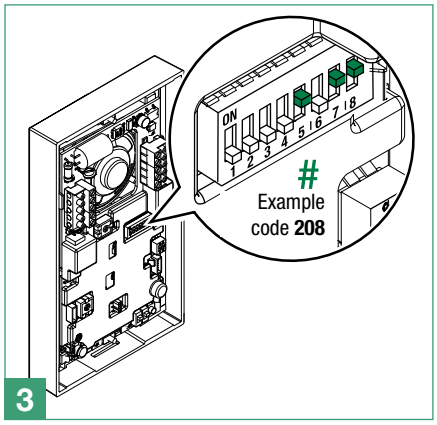

 # Depending on the function you want to program, set the DIP-switches in accordance with the table below.

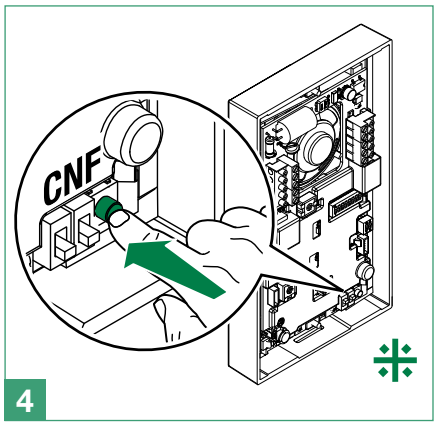

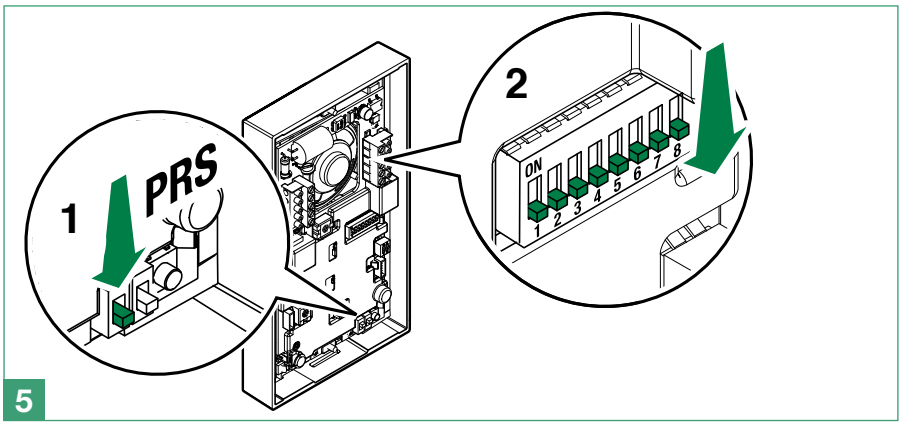

⁜ Repeat steps 3 and 4 to program other special functions

CODE	DIP SWITCHES ON	FUNCTIONS
		Audio messages
195	1,2,7,8	Hebrew
196	3,7,8	Polish
197	1,3,7,8	Catalan
198	2,3,7,8	Galician
199	1,2,3,7,8	Basque
206	2,3,4,7,8	Danish
207	1,2,3,4,7,8	Norwegian
211	1,2,5,7,8	Swedish
215	1,2,3,5,7,8	Italian
216	4,5,7,8	French
217	1,4,5,7,8	Spanish
218	2,4,5,7,8	Dutch
219	1,2,4,5,7,8	Greek
220	3,4,5,7,8	English
221	1,3,4,5,7,8	German
222	2,3,4,5,7,8	Portuguese

202	2,4,7,8	Enables voice message (door opened warning) when the RTE contact is closed
203	1,2,4,7,8	Disables voice message (door opened warning) when the RTE contact is closed (default setting)
214	2,3,5,7,8	OFF (default)

		Actuator control management. N.B. the system should not include art. 1256 in generic actuator mode.
227	1,2,6,7,8	Actuator function on S serial line = enabled
228	3,6,7,8	Actuator function on S serial line = disabled (default)

229	1,3,6,7,8	C.NC.NO relay activation on actuator command: 2 sec
230	2,3,6,7,8	C.NC.NO relay activation on actuator command: 4 sec
231	1,2,3,6,7,8	C.NC.NO relay activation on actuator command: 8 sec

		Door lock
245	1,3,5,6,7,8	Door lock time: 2 sec. + disabling tone (default)
246	2,3,5,6,7,8	Door lock time: 4 sec
247	1,2,3,5,6,7,8	Door lock time: 8 sec

248	4,5,6,7,8	Door lock confirmation tone: enabled
251	1,2,4,5,6,7,8	Relay C.NC.NO in parallel to SE (default)

252	3,4,5,6,7.8	Lock-release always enabled (default)
253	1,3,4,5,6,7,8	Lock-release only enabled for user called

		System functions
232	4,6,7,8	Awaiting response time: 60 sec. (default)
233	1,4,6,7,8	Awaiting response time: 120 sec
234	2,4,6,7,8	Awaiting response time: 30 sec

235	1,2,4,6,7,8	Talk time: 90 sec. (default)
236	3,4,6,7,8	Talk time: 180 sec

239	1,2,3,4,6,7,8	Confirmation tone on user call = enabled (default)
240	5,6,7,8	Confirmation tone on user call = disabled

243	1,2,5,6,7,8	Reset wait time: 10 sec (default)
244	3,5,6,7,8	Reset wait time: 1 sec

208	5,7,8	Enables “awaiting reset time" on lock-release command.
209	1,5,7,8	Disables “awaiting reset time" on lock-release command (awaiting response time or talk time will be activated)

249	1,4,5,6,7,8	Send call: single (default)
250	2,4,5,6,7,8	Call transmission: triple

		System mode
0		Simplebus (default)
255	1,2,3,4,5,6,7,8	Simplebus Top

254	2,3,4,5,6,7,8	**Restore default**

Operating notes

When a call is transmitted from the external unit, if a busy tone is heard instead of the ringtone, this means communication with another external unit is in progress.

System performance and layouts

For further information of system performance and to view installation layouts, click on the system type that best meets your requirements:

- **Audio kit** for the creation of audio systems for *detached homes*
- **SB2 audio system kit** for the creation of audio systems for *residential complexes*

Addressing table

Code	Dip switch ON																
1	1	**31**	1,2,3,4,5	**61**	1,3,4,5,6	**91**	1,2,4,5,7	**121**	1,4,5,6,7	**151**	1,2,3,5,8	**181**	1,3,5,6,8	**211**	1,2,5,7,8
2	2	**32**	6	**62**	2,3,4,5,6	**92**	3,4,5,7	**122**	2,4,5,6,7	**152**	4,5,8	**182**	2,3,5,6,8	**212**	3,5,7,8
3	1.2	**33**	1,6	**63**	1,2,3,4,5,6	**93**	1,3,4,5,7	**123**	1,2,4,5,6,7	**153**	1,4,5,8	**183**	1,2,3,5,6,8	**213**	1,3,5,7,8
4	3	**34**	2.6	**64**	7	**94**	2,3,4,5,7	**124**	3,4,5,6,7	**154**	2,4,5,8	**184**	4,5,6,8	**214**	2,3,5,7,8
5	1,3	**35**	1,2,6	**65**	1,7	**95**	1,2,3,4,5,7	**125**	1,3,4,5,6,7	**155**	1,2,4,5,8	**185**	1,4,5,6,8	**215**	1,2,3,5,7,8
6	2,3	**36**	3,6	**66**	2,7	**96**	6.7	**126**	2,3,4,5,6,7	**156**	3,4,5,8	**186**	2,4,5,6,8	**216**	4,5,7,8
7	1,2,3	**37**	1,3,6	**67**	1,2,7	**97**	1,6,7	**127**	1,2,3,4,5,6,7	**157**	1,3,4,5,8	**187**	1,2,4,5,6,8	**217**	1,4,5,7,8
8	4	**38**	2,3,6	**68**	3,7	**98**	2,6,7	**128**	8	**158**	2,3,4,5,8	**188**	3,4,5,6,8	**218**	2,4,5,7,8
9	1,4	**39**	1,2,3,6	**69**	1,3,7	**99**	1,2,6,7	**129**	1,8	**159**	1,2,3,4,5,8	**189**	1,3,4,5,6,8	**219**	1,2,4,5,7,8
10	2,4	**40**	4,6	**70**	2,3,7	**100**	3,6,7	**130**	2,8	**160**	6,8	**190**	2,3,4,5,6,8	**220**	3,4,5,7,8
11	1,2,4	**41**	1,4,6	**71**	1,2,3,7	**101**	1,3,6,7	**131**	1,2,8	**161**	1,6,8	**191**	1,2,3,4,5,6,8	**221**	1,3,4,5,7,8
12	3,4	**42**	2,4,6	**72**	4,7	**102**	2,3,6,7	**132**	3,8	**162**	2,6,8	**192**	7,8	**222**	2,3,4,5,7,8
13	1,3,4	**43**	1,2,4,6	**73**	1,4,7	**103**	1,2,3,6,7	**133**	1,3,8	**163**	1,2,6,8	**193**	1,7,8	**223**	1,2,3,4,5,7,8
14	2,3,4	**44**	3,4,6	**74**	2,4,7	**104**	4,6,7	**134**	2,3,8	**164**	3,6,8	**194**	2,7,8	**224**	6,7,8
15	1,2,3,4	**45**	1,3,4,6	**75**	1,2,4,7	**105**	1,4,6,7	**135**	1,2,3,8	**165**	1,3,6,8	**195**	1,2,7,8	**225**	1,6,7,8
16	5	**46**	2,3,4,6	**76**	3,4,7	**106**	2,4,6,7	**136**	4,8	**166**	2,3,6,8	**196**	3,7,8	**226**	2,6,7,8
17	1,5	**47**	1,2,3,4,6	**77**	1,3,4,7	**107**	1,2,4,6,7	**137**	1,4,8	**167**	1,2,3,6,8	**197**	1,3,7,8	**227**	1,2,6,7,8
18	2,5	**48**	5.6	**78**	2,3,4,7	**108**	3,4,6,7	**138**	2,4,8	**168**	4,6,8	**198**	2,3,7,8	**228**	3,6,7,8
19	1,2,5	**49**	1,5,6	**79**	1,2,3,4,7	**109**	1,3,4,6,7	**139**	1,2,4,8	**169**	1,4,6,8	**199**	1,2,3,7,8	**229**	1,3,6,7,8
20	3,5	**50**	2,5,6	**80**	5,7	**110**	2,3,4,6,7	**140**	3,4,8	**170**	2,4,6,8	**200**	4,7,8	**230**	2,3,6,7,8
21	1,3,5	**51**	1,2,5,6	**81**	1,5,7	**111**	1,2,3,4,6,7	**141**	1,3,4,8	**171**	1,2,4,6,8	**201**	1,4,7,8	**231**	1,2,3,6,7,8
22	2,3,5	**52**	3,5,6	**82**	2,5,7	**112**	5.67	**142**	2,3,4,8	**172**	3,4,6,8	**202**	2,4,7,8	**232**	4,6,7,8
23	1,2,3,5	**53**	1,3,5,6	**83**	1,2,5,7	**113**	1,5,6,7	**143**	1,2,3,4,8	**173**	1,3,4,6,8	**203**	1,2,4,7,8	**233**	1,4,6,7,8
24	4.5	**54**	2,3,5,6	**84**	3,5,7	**114**	2,5,6,7	**144**	5.8	**174**	2,3,4,6,8	**204**	3,4,7,8	**234**	2,4,6,7,8
25	1,4,5	**55**	1,2,3,5,6	**85**	1,3,5,7	**115**	1,2,5,6,7	**145**	1,5,8	**175**	1,2,3,4,6,8	**205**	1,3,4,7,8	**235**	1,2,4,6,7,8
26	2,4,5	**56**	4,5,6	**86**	2,3,5,7	**116**	3,5,6,7	**146**	2,5,8	**176**	5,6,8	**206**	2,3,4,7,8	**236**	3,4,6,7,8
27	1,2,4,5	**57**	1,4,5,6	**87**	1,2,3,5,7	**117**	1,3,5,6,7	**147**	1,2,5,8	**177**	1,5,6,8	**207**	1,2,3,4,7,8	**237**	1,3,4,6,7,8
28	3,4,5	**58**	2,4,5,6	**88**	4,5,7	**118**	2,3,5,6,7	**148**	3,5,8	**178**	2,5,6,8	**208**	5,7,8	**238**	2,3,4,6,7,8
29	1,3,4,5	**59**	1,2,4,5,6	**89**	1,4,5,7	**119**	1,2,3,5,6,7	**149**	1,3,5,8	**179**	1,2,5,6,8	**209**	1,5,7,8	**239**	1,2,3,4,6,7,8
30	2,3,4,5	**60**	3,4,5,6	**90**	2,4,5,7	**120**	4,5,6,7	**150**	2,3,5,8	**180**	3,5,6,8	**210**	2,5,7,8	***240**	5,6,7,8

* NOTE: Code 240 is reserved for the porter switchboard

2ª ed. Rev1 01/2025
cod. 2G40002810

Comelit®
Passion.Technology.Design.

www.comelitgroup.com
Via Don Arrigoni, 5 - 24020 Rovetta (BG) - Italy