SECURITY DOOR CONTROLS ■ WWW.SDCSECURITY.COM
[t] 800.413.8783 ■ 805.494.0622 ■ E-mail: service@sdcsecurity.com ■ 801 Avenida Acaso, Camarillo, CA 93012 ■ PO Box 3670, Camarillo, CA 93011

INSTALLATION INSTRUCTIONS

1581S
MINI EXIT CHECK® DELAYED EGRESS EMLOCK®

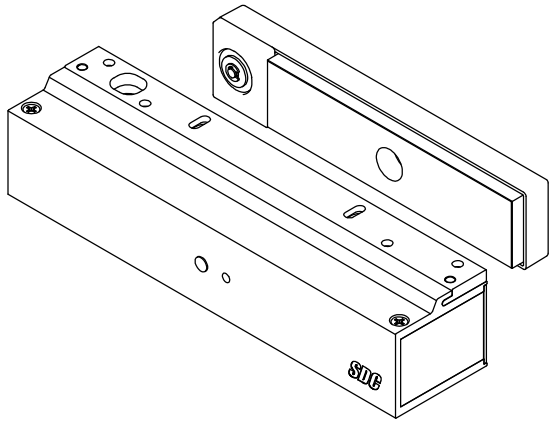

PUSH UNTIL ALARM SOUNDS. DOOR CAN BE OPENED IN 15 SECONDS.

KEEP PUSHING. THIS DOOR WILL OPEN IN 15 SECONDS. ALARM WILL SOUND.

California Building Code Compliant

Application

When unauthorized egress is initiated, the Exit Check® delays egress through the door for a period of 15 seconds. Meanwhile, the person exiting must wait allowing personnel or security to respond. The door unlocks after the 15 second delay period has elapsed, permitting egress. A signal from the fire/life safety system will release the lock immediately for uninhibited egress in an emergency.

Exit Check® applications include:

- Restricting the egress of patients for their own safety.
- Restricting the egress of commercial center patrons for minimum security application needs.

Standard Features

- Small & compact size
- 650 lbs. holding force
- 15 or 30 second Exit Delay when activated.
- 1 second Nuisance Delay
- Subdued Alarm with 2 Distinct Tones:
- - Alarm Activation Intermittent
- - Door Release – Continuous
- Choice of Activation Trigger:
- - Door Movement
- - Exit Device w/ REX Switch
- - Touch Sense Bar w/REX Switch
- **Auto Power-Up** – Occurs when power is restored and
- or the fire panel is restored (when allowed by code).
- **Manual Power-Up** – *This is a UBC & California Building Code Compliant Feature* – Only after power restoration and fire panel reset may the lock be reset manually at the opening. A power-up reset key switch or keypad is required adjacent to the door.
- Instant Reset from Bypass mode for interfacing with Patient Monitoring Systems.
- Vandal resistant Proximity Sensor Switch
- Auto Sensing 12/24VDC input power
- Low Power Consumption
- 5 foot Power Cable

Optional Features

- **DPS** Door Position Switch Output
- **BAS** Bond Alert Sensor Switch Output
- **Tandem Cable** (for pair of doors)
  - 3' Cable – **1581S-TC3**
  - 10' Cable – **1581S-TC10**

Electrical Specifications

- For interior applications only
- Power/Current Requirements:
  - 12 - 24VDC Auto-sensing
  - 320 mA @ 24VDC
  - 600 mA @ 12VDC
- Lock Status Relay Rating: 1 amp @ 30V resistive
- DPS Rating: 250 mA @ 30V resistive
- BAS Option: 250 mA @ 30V resistive

Building & Fire Life Safety Code Compliant

- 1581S with ND, NH, or NC modes
  - **IBC** International Building Code
  - **IFC** International Fire Code
  - **NFPA 101** Life Safety Code
  - **NFPA 1, UFC**, Uniform Fire Code
  - **UBC** Uniform Building Code
  - **CBC** California Building Code
  - **SBC** Standard Building Code
- 1581S with BD, BH, or BC modes
  - **BOCA** National Building Code compliant
  - **Chicago** Building Code compliant

Only the 1581S and the 1581T have been UL listed as "Special Locking Arrangements" to UL standard 294 and NFPA 101.

UL LISTED USA c UL LISTED CANADA

GWXT/GWXT7 Auxiliary Locks
FWAX Special Locking Arrangements

California State
Fire Marshal Listed
CSFM #3774-0324:103

Any suggestions or comments to this instruction or product are welcome. Please contact us through our website or email engineer@sdcsecurity.com

Components Included in Package

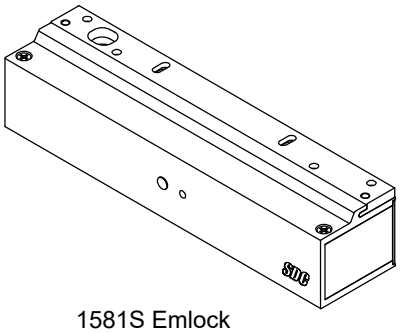

1581S Emlock

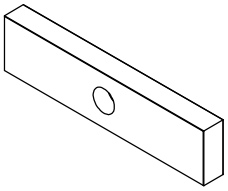

Armature Plate
1581S-10T

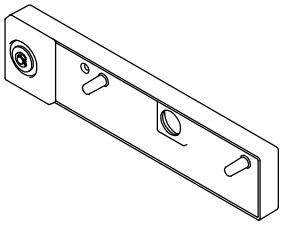

Trigger Block Assembly
1580S-11

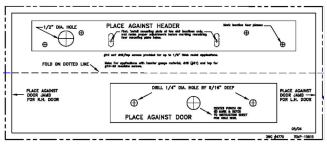

Template
TEMP-1581S

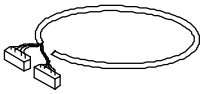

Controller Cable Assembly
CA-1581S

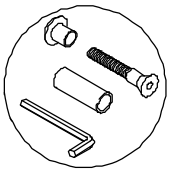

Armature Screw Pack
1580S-101-C

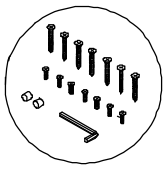

Emlock Screw Pack
C-1500-RF

(NFPA-101)

The 1581S mode operation complies with the following building and fire codes: NFPA 101; NFPA 1-UFC; UBC; IBC; IFC; SBC; California Building Code. Listings: UL Listed: Special Locking Arrangements and Auxiliary Locks; California State Fire Marshal (CSFM) Listed.

Option Code	Delay Release Time	Nusiance Time	Reset after Alarm	Lock Status on Power-Up	Code Description
NC (CBC Compliant)	15 sec Fixed	1 sec Fixed	Manual	Unlocked Fixed	NFPA/OSHPD compliant. Power Up Unlocked and Manual Reset are fixed.
ND	15 sec Fixed	1 sec Fixed	Manual	Locked or Unlocked Selectable	NFPA Compliant
NH	30 sec Fixed	1 sec Fixed	Manual	Locked or Unlocked Selectable	NFPA Compliant

(BOCA/Chicago)

The 1581S mode operation complies with BOCA National Building Code and the Chicago Building Code: UL Listed, Special Locking Arrangements and Auxiliary Locks.

Option Code	Delay Release Time	Nusiance Time	Reset after Alarm	Lock Status on Power-Up	Code Description
BC (CHICAGO)	15 sec Fixed	0 sec Fixed	Auto/Manual	Locked or Unlocked Selectable	BOCA/Chicago compliant. 0 sec nuisance. Automatic alarm reset after 30 continuous seconds of door closure
BD	15 sec Fixed	1 sec Fixed	Auto/Manual	Locked or Unlocked Selectable	BOCA compliant. Automatic alarm reset after 30 continuous seconds of door closure
BH	30 sec Fixed	1 sec Fixed	Auto/Manual	Locked or Unlocked Selectable	BOCA compliant. Automatic alarm reset after 30 continuous seconds of door closure

Per BOCA compliance, the Exit Check is manually reset by authorized personnel after an alarm by closing the door and actuating the integral reset key switch or by momentarily closing a contact connected to the remote reset terminals. In addition, reset will be automatically initiated once the door has been opened, then closed and remains closed for 30 consecutive seconds.

1581S Operational Description

When used with a latching hardware that will keep the door closed and rigid the 1581S Exit Check will electromagnetically secure the door. It will display a solid green status LED indicating that the door is locked.

Activation / Alarmed Release:

Activation of the 1581S unlock cycle is initiated by releasing the door latch and applying up to 15 lbs. of pressure to the door causing slight door movement. A short nuisance delay period is then initiated to prevent false alarms. A pre-activation warning tone will sound. Re-latching the door during the nuisance delay period will silence the pre-activation warning tone and keep the door locked.

Once the nuisance delay period has been exceeded, the Exit Check continues with an irreversible door release cycle. The alarm will sound to alert personnel of an unauthorized exit. After the delay cycle has expired, the Exit Check will release the door allowing free egress.

Reset / Relock:

The Exit Check can be manually reset by authorized personnel by closing the door and activating the Reset input.

Request to Exit / Authorized Bypass:

Momentarily actuating the Request to Exit / Bypass input will initiate the request to exit cycle and unlock the 1581S Exit Check allowing free egress. After the request to exit cycle has expired or the door closes, the Exit Check will automatically relock.

By keeping the Request to Exit input continuously activated, the 1581S will remain unlocked for extended periods of time. Releasing the Request to Exit input will restart the request to exit cycle and will relock the door after the request to exit time has expired.

Note:
A remote key switch, keypad, and or push button (see suggested models on page 7) MUST be purchased to remotely operate the Reset and REX Functions.

LOCK MOUNTING

1. Locate the paper Template and fold along the dotted line. Place the folded edge of the template against the door, header stop, and vertical stop opposite the hinge side of the door (see Fig. 1). Tape in place at this position.

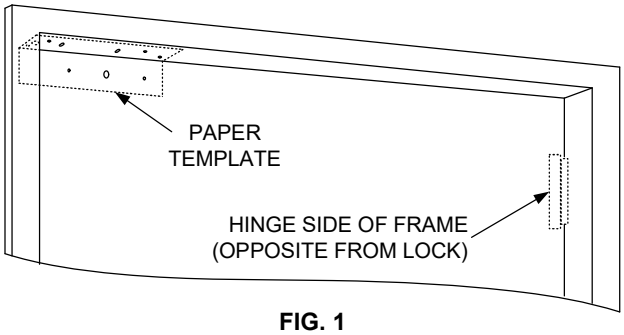

FIG. 1

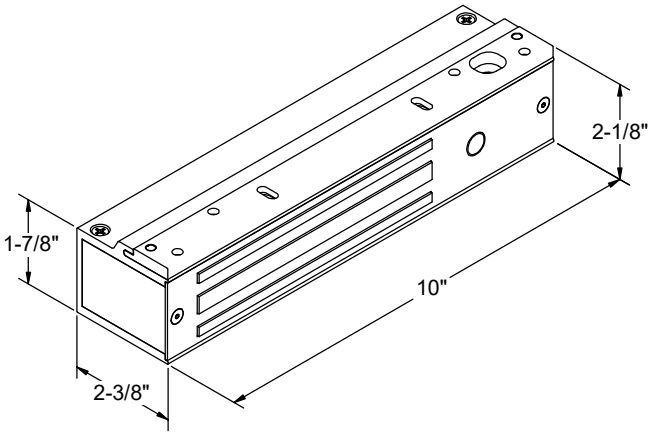

2. Prior to drilling, inspect to see if any of the holes cannot be drilled due to the frame or door configuration. A Filler Plate or Angle Bracket may be required as shown in Figures 2B and 2C (see page 13 for part specifications).

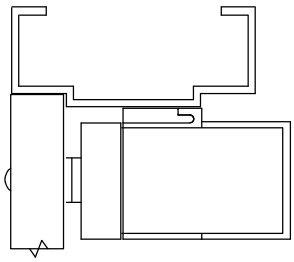

FIG. 2A
Typical

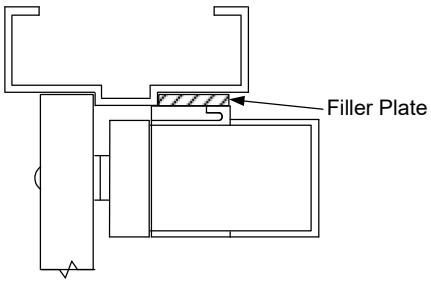

FIG. 2B
With Filler Plate

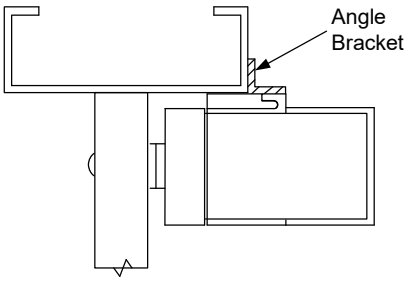

FIG. 2C
With Angle Bracket

LOCK MOUNTING (CONT.)

3. Mark hole locations on door and frame as indicated by template.

4. Drill holes in door and mount armature according to figure(s) 3A, 3B, or 3C depending on door type.

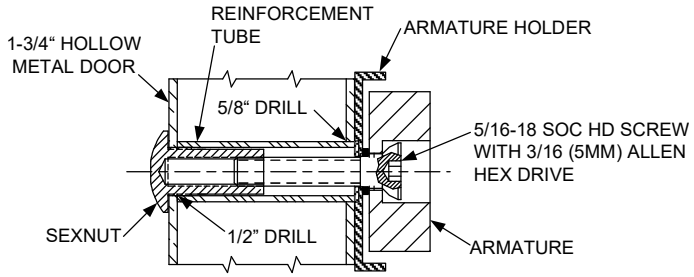

FIG. 3A HOLLOW METAL DOOR

From Sexnut side of door, drill exactly 1/2” hole thru one metal thickness only. From Armature side of door, drill 5/8” hole to insert reinforcement tube. Press in sexnut and reinforcement tube all the way. Mount armature to door as shown using hardware provided.

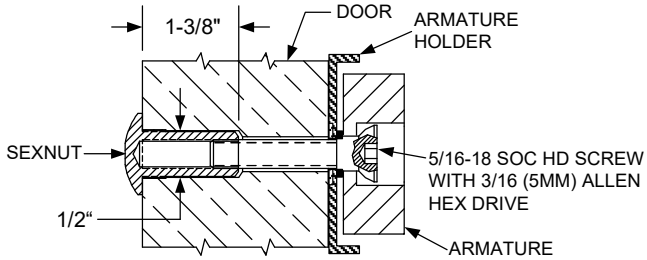

FIG. 3B SOLID DOOR

Drill 3/8” hole thru door. From sexnut side of door, drill exactly 1/2” hole, 1-3/8” deep. Mount armature to door as shown with hardware provided.

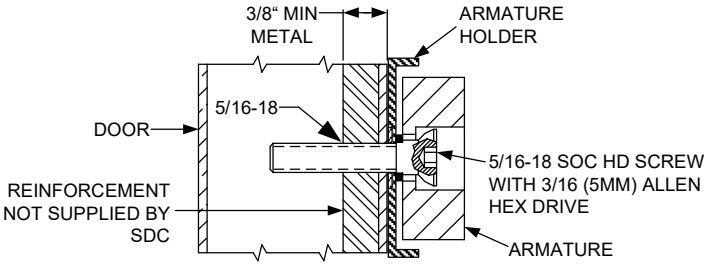

FIG. 3C REINFORCED DOOR

Drill and tap for 5/16-18 machine screw. Mount armature to door as shown with hardware provided.

5. Install mounting plate to header with provided screws, making sure that the interlocking detail is facing away from the door side of the stop (see Fig. 4). For up to 1/8" thick metal applications, use provided #10 self drill/tap screws. For applications with heavier gauge material, drill with a #21 bit and tap for provided #10-32 machine screws.

IMPORTANT! – It is highly recommended that you first install the mounting plate at the two slot locations only. This will allow you to make proper adjustments of the lock’s position prior to marking, drilling, and tapping the five permanent mounting holes.

6. Holding the magnet housing at each end, engage the entire length of the interlocking detail by pushing towards the door (If necessary, tap with a soft hammer to ensure proper alignment and engagement).

Caution:
The lock body must be held in place until secured with mounting screws. Integrated screws are located inside the housing at each end. Tighten the screws and check alignment.

7. Before securing the lock with all screws continue to next page for wiring. Power up is required in order to verify proper activation alignment.

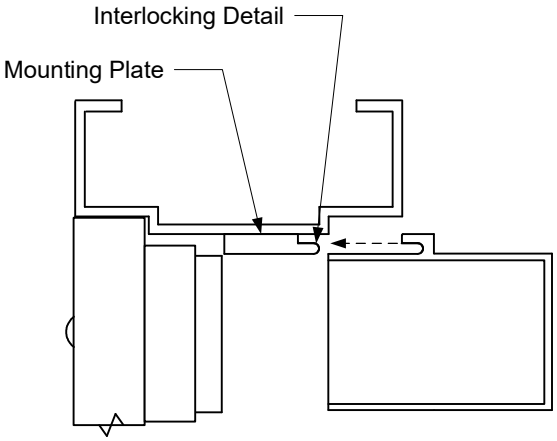

FIG. 4

~WARNINGS!~

CORRECT OPERATION OF THIS LOCK DEPENDS ON PROPER ALIGNMENT OF THE PROXIMITY SENSOR SWITCH BEING ABLE TO DETECT THE ARMATURE ADJUSTMENT PLATE WHEN THE DOOR IS CLOSED. ONLY THE ARMATURE ADJUSTMENT PLATE CAN BE ADJUSTED FOR FINE TUNING.

DO NOT ATTEMPT TO ADJUST THE PROXIMITY SENSOR SWITCH. ADJUSTING SWITCH WILL RESULT IN DAMAGE TO THE SENSOR AND VOID THE WARRANTY.

INPUT TERMINALS FOR RESET, REX AND REMOTE TRIGGER MUST ONLY BE CONNECTED TO A NORMALLY OPEN MOMENTARY DRY CONTACT SWITCH. CONNECTION TO A VOLTAGE OR A "WET" OUTPUT WILL DAMAGE THE LOCK AND VOID THE WARRANTY

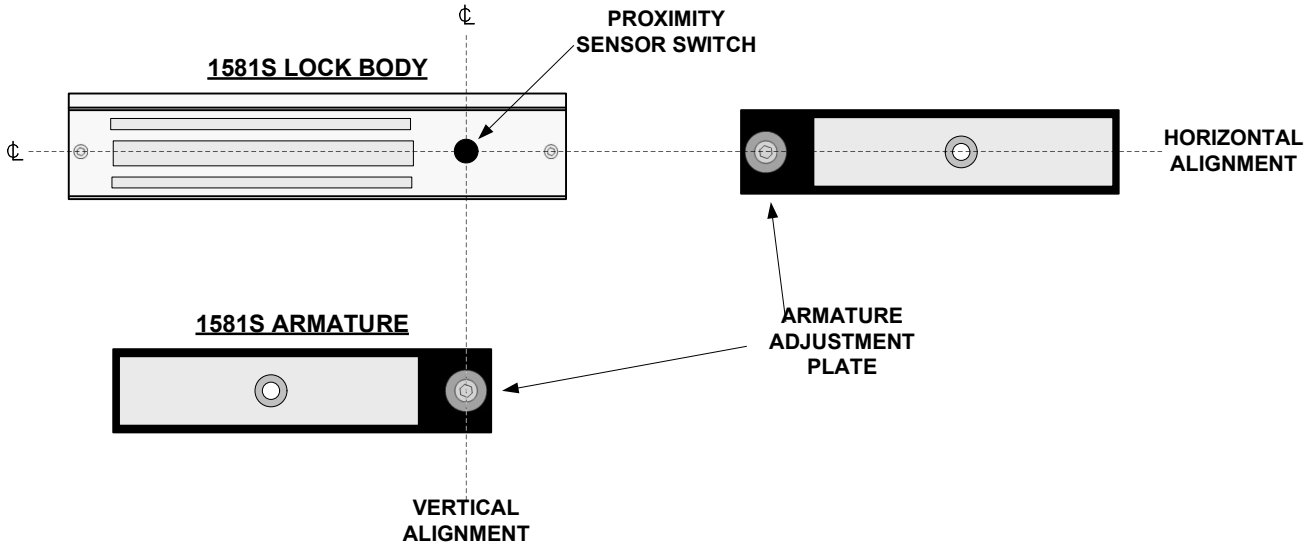

Operational Alignment Verification

- For basic alignment verification run wires through the header to a power source and to a Normally Open **DRY** contact switch. At minimum it would be the black (-) & red (+) wires along with the blue reset wire that would need to be connected at this time to verify alignment of proximity sensor switch and armature adjustment plate.

- The lock auto senses the power supply voltage of either 12/24vdc.

- Once all connection are made, slowly swing the door closed to visually observe the positioning of the armature adjustment plate to the proximity sensor switch on the lock. The armature adjustment plate and the proximity sensor switch should align with one another both horizontally and vertically. The LED will flash green indicating that the lock is in manual power up mode. Reset the lock by the **DRY** contact to secure the lock and the LED will have a steady green.

- If going through the steps above does not give you any of the mentioned indicators, then there are some adjustments that might assist.
- **Armature Adjustment Plate:**
  -The armature adjustment plate can be adjusted for sensitivity and performance if the door gap is greater or less than 1/8" to 1/4" of door movement.
  -Turning the hex head screw located on the center of the armature adjustment plate counterclockwise will extend the plate outward toward the lock face.
  -Turning the hex screw clockwise will have the opposite affect and bring the plate inward away from the lock face.
  -Depending on the door gap will determine which direction is required.
  -The armature adjustment plate does not have to physically make contact to the proximity sensor switch in order to operate correctly

* Once the proper alignment has been verified between the proximity senser and armature adjustment plate then final fastening of screws can be completed.

WIRING DETAILS & FUNCTIONS (ALL OPTIONS SHOWN)

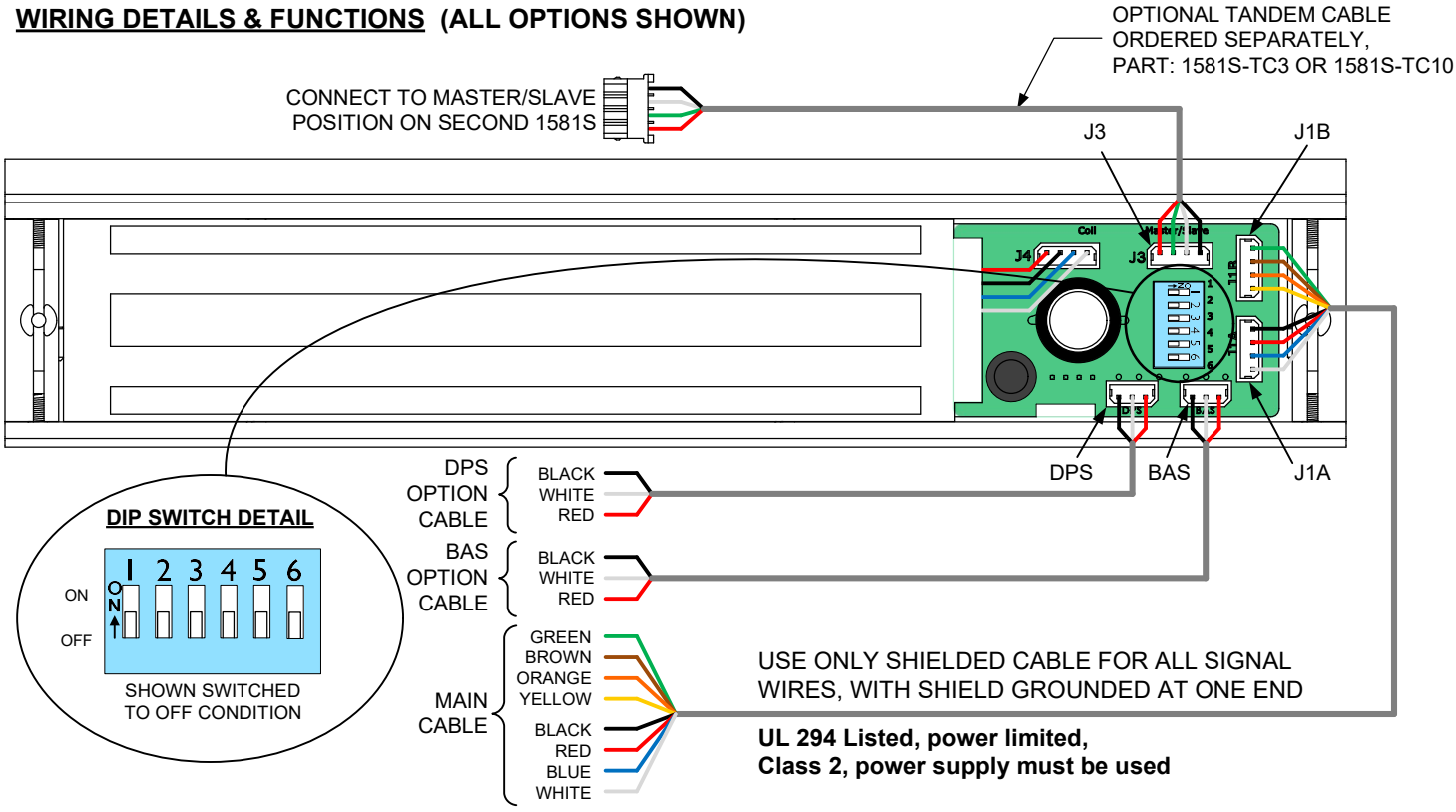

CONNECTOR	WIRE	CONTROL / FUNCTION	INPUT / OUTPUT	DESCRIPTION
MAIN CONNECTOR J1A	BLACK	POWER (-)	INPUT	(-) 12/24 VDC REGULATED POWER
	RED	POWER (+)	INPUT	(+) 12/24 VDC REGULATED POWER
	BLUE	RESET / *REX	INPUT	MOMENTARY GROUND TO (-) POWER – DRY CONTACT
	WHITE	REX & MAINTAINED BYPASS	INPUT	(REX) MOMENTARY GROUND TO (-) POWER DRY CONTACT
* REX on Blue reset wire when enabled by DIP switch				(BYPASS) MAINTAINED GROUND TO (-) POWER – DRY CONTACT
MAIN CONNECTOR J1B	GREEN	REMOTE TRIGGER	INPUT	MOMENTARY GROUND TO (-) POWER USING DRY CONTACT
	BROWN	RELAY - COMMON	OUTPUT	(2) SPST DRY CONTACT OUTPUTS TO REMOTE CONTROL(S)
	ORANGE	RELAY – CLOSED IN ALARM	OUTPUT	ANNUNCIATOR, LED OR ALARM SYSTEM
	YELLOW	RELAY – CLOSED IN SECURE	OUTPUT	MONITOR – RATING: 1A @ 30 VOLTS RESISTIVE
MASTER/ SLAVE J3	RED GREEN BLACK WHITE	CABLE FOR TANDEM LOCK CONNECTION (OPTIONAL)	INTERCONNECT	INTERCONNECT CABLE INTERFACING (2) 1581S UNITS MASTER & SLAVE FOR PAIR OF DOORS. CABLE ORDERED SEPERATELY P/N: 1581S-TC3 (3' LENGTH) OR 1581S-TC10 (10' LENGTH)
DPS OPTION CONNECTOR	WHITE	SWITCH - COMMON	OUTPUT	
	RED	SWITCH - DOOR OPEN	OUTPUT	
	BLACK	SWITCH - DOOR CLOSED	OUTPUT	
BAS OPTION CONNECTOR	WHITE	SWITCH - COMMON	OUTPUT	RATING:
	RED	SWITCH - N/C	OUTPUT	250mA @ 30 VOLTS RESISTIVE POLARITY
	BLACK	SWITCH - N/O	OUTPUT	SHOWN WITH DOOR UNSECURE

DIP SWITCH SETTINGS

SWITCH #	FUNCTION	OFF	ON	DESCRIPTION
1	REX Time	1 Second	10 Seconds	Internal relock time delay when using REX input controls.
2	**Power-up Option	Disabled	Enabled	Manual reset on power-up required when disabled; Auto reset on power-up when enabled.
3	Remote Trigger	Disabled	Enabled	When enabled, remote trigger input is used for external activation; Internal sensor disabled.
4	Master/Slave	Master	Slave	Designates lock as master or slave for tandem application (tandem cable required).
5	Door Prop Shunt	Disabled	Enabled	When disabled, the lock will enter alarm mode if the door is held open past the REX period. When enabled, no alarm will sound if the door is held open past the REX period following an authorized REX signal. Lock will relock and rearm upon closure of the door.
6	REX on Reset Input	Disabled	Enabled	When disabled, the blue reset will only function as a reset wire after an alarmed release. When enabled and the lock is secure, momentarily shorting the blue reset wire to ground will initiate a REX period.

** Power up lock option not available on all code operations. (Refer to pg. 2 chart for mode operation)

Systems Applications Reference

Activation by applying pressure to doors with latching hardware

Wall Mount Reset Station or Keypad required with 1581S. A Remote Annunciator Station is optional.

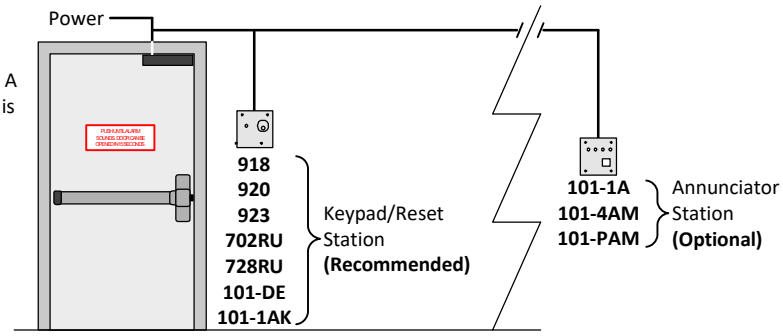

Pair of doors with two locks requires a 3' Tandem Cable (1581S-TC3) to Power the Slave operation. Cable routed through frame header. Pushing either door triggers the delayed release of both doors.

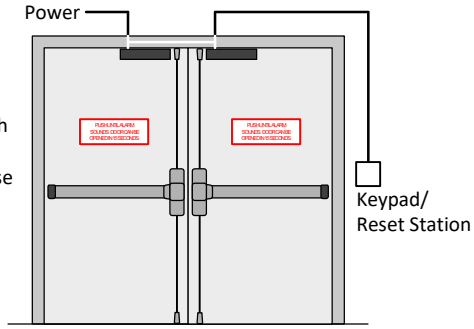

Pair of doors with two locks routing through an external junction box use a 10' Tandem Cable (1581S-TC10) as it's required to Power the Slave lock operation. Pushing either door triggers the delayed release of both doors.

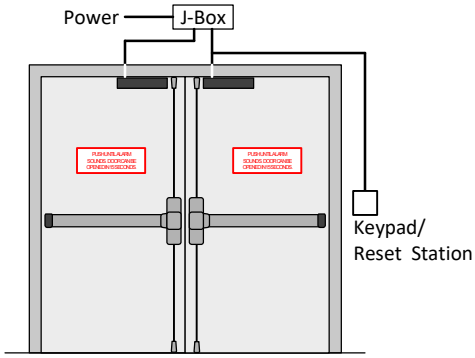

Activation by a remote trigger for doors with or without latching hardware:

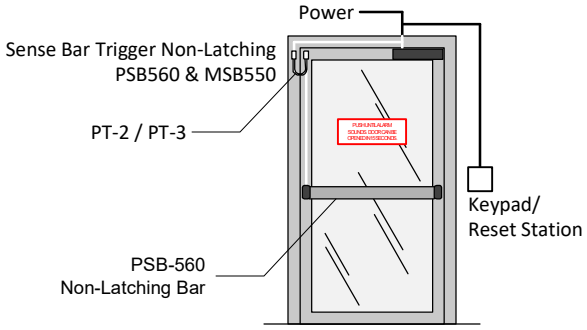

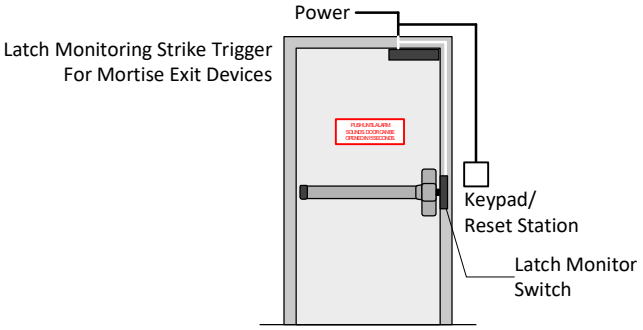

Pair of doors with two locks and Tandem Cable required for Power and Auxiliary operation. Sense Bar Trigger Non-Latching PSB560 & MSB550.

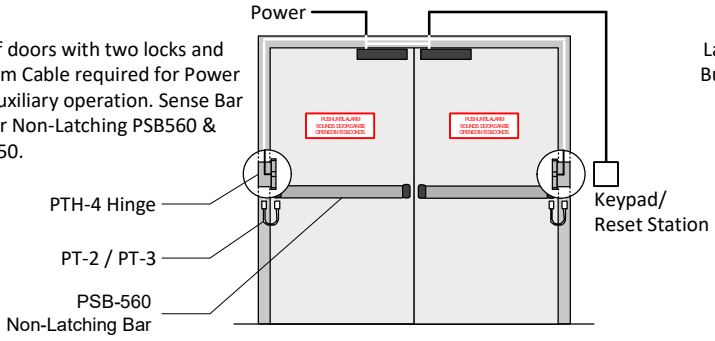

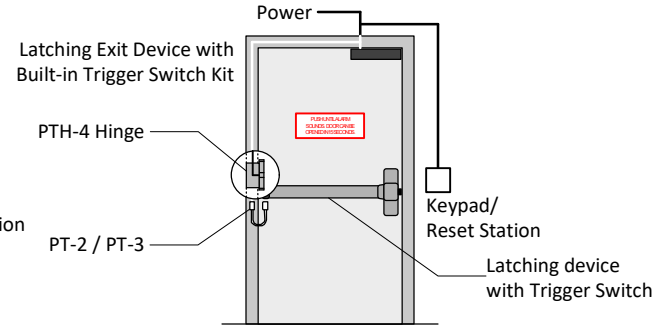

System Wiring Example: Single Door Access Control or Key Switch

WARNING:
APPLICATION OF VOLTAGE TO THE DRY CONTACT INPUTS OF THIS UNIT WILL CAUSE PERMANENT DAMAGE AND VOID THE WARRANTY

Access Control Wiring

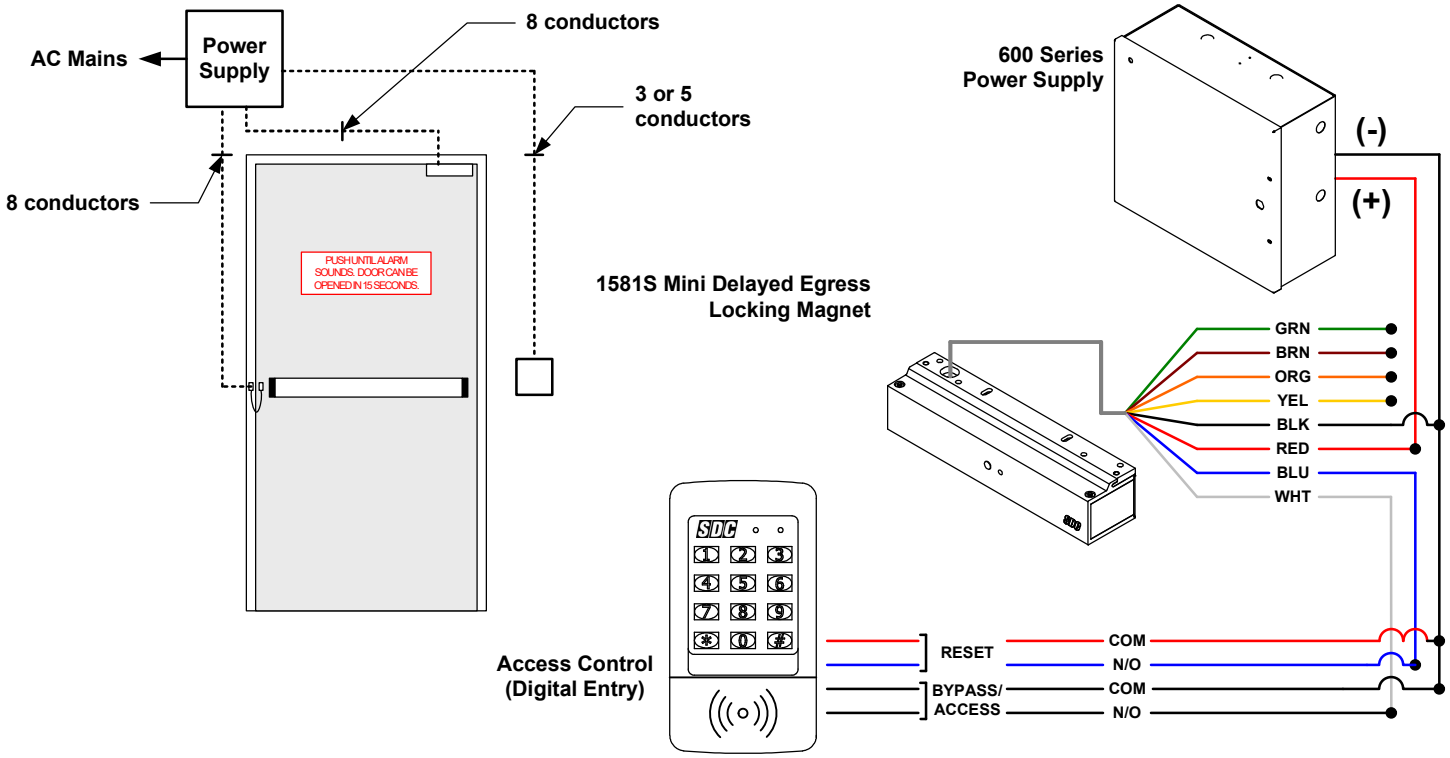

Key Switch Wiring

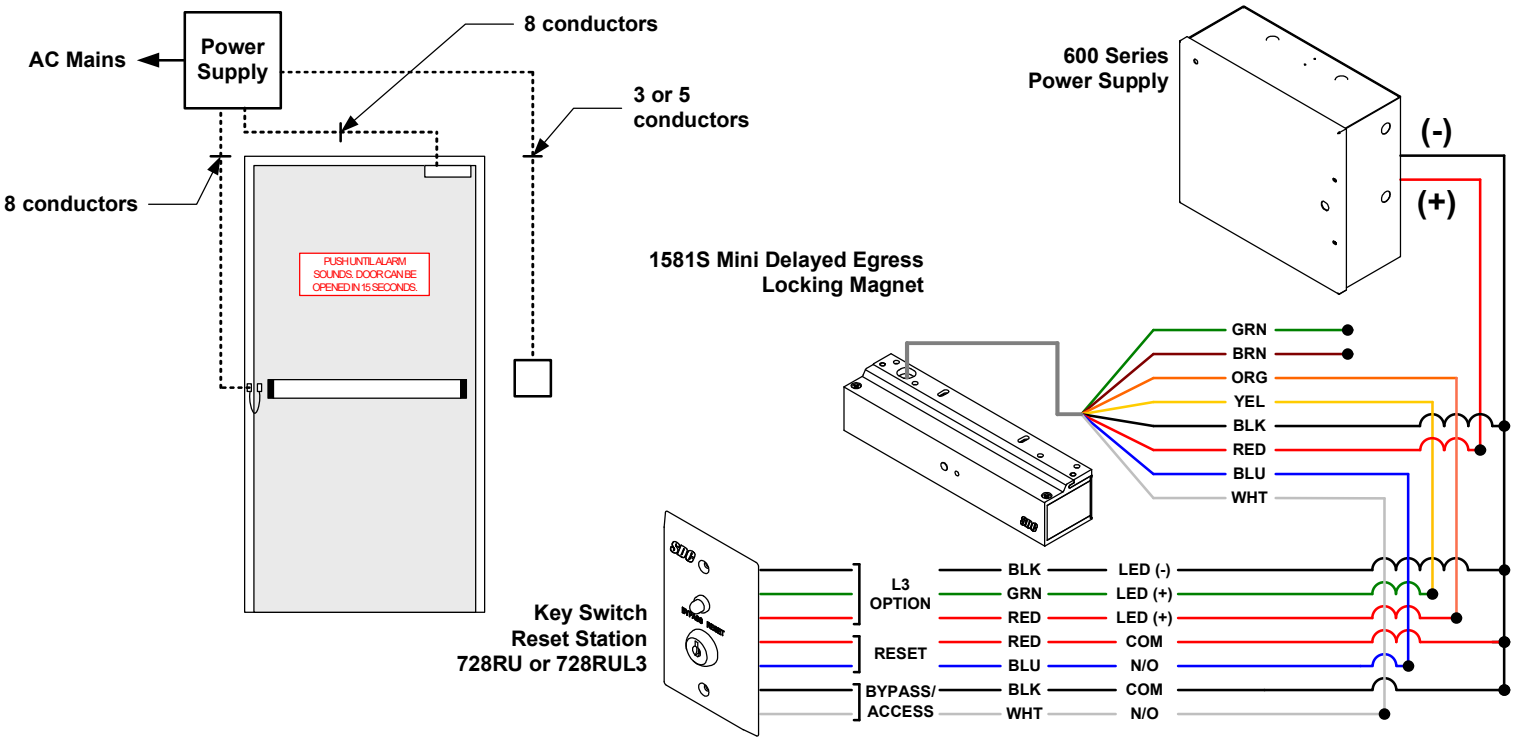

System Wiring Example: Single Door
Access Control / Remote Trigger / IPO / Smoke Detection

WARNING:
APPLICATION OF VOLTAGE TO THE DRY CONTACT INPUTS OF THIS UNIT WILL CAUSE PERMANENT DAMAGE AND VOID THE WARRANTY

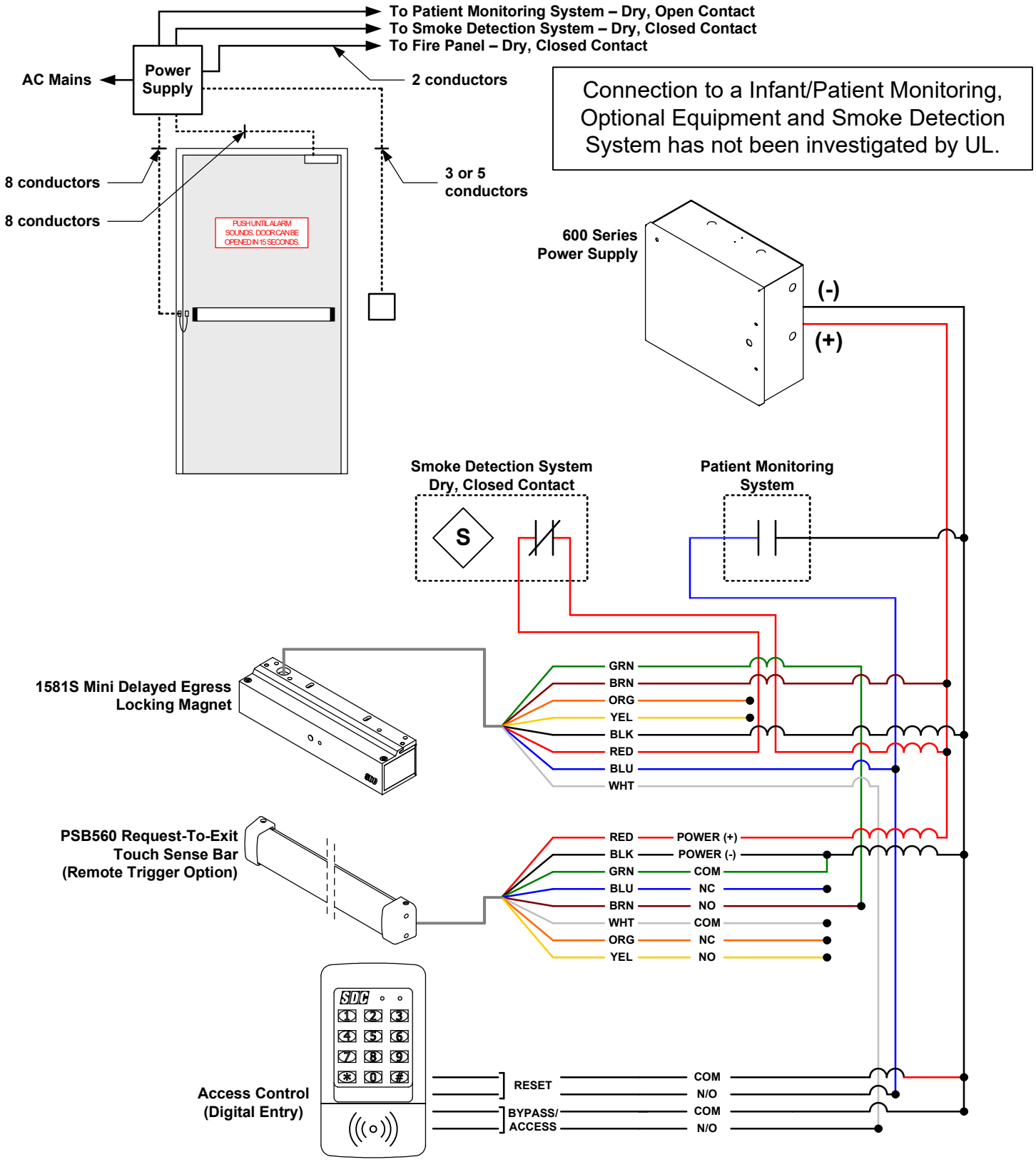

System Wiring Example: Single Door
Key Switch / Remote Trigger / IPO / Smoke Detection

WARNING:
APPLICATION OF VOLTAGE TO THE DRY CONTACT INPUTS OF THIS UNIT WILL CAUSE PERMANENT DAMAGE AND VOID THE WARRANTY

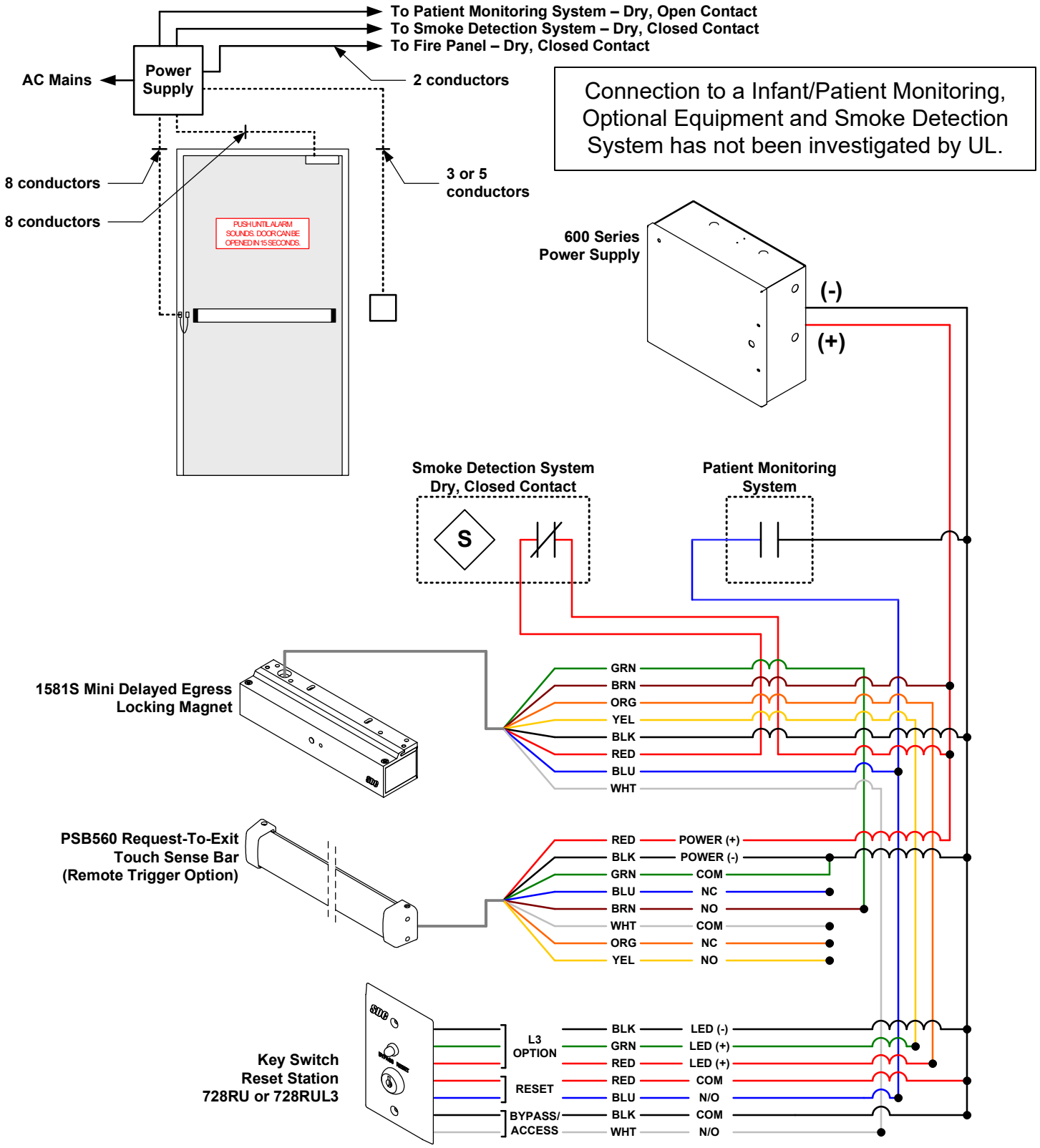

System Wiring Example: Pair of Doors
Key Switch / Remote Trigger / IPO / Smoke Detection

WARNING:
APPLICATION OF VOLTAGE TO THE DRY CONTACT INPUTS OF THIS UNIT WILL CAUSE PERMANENT DAMAGE AND VOID THE WARRANTY

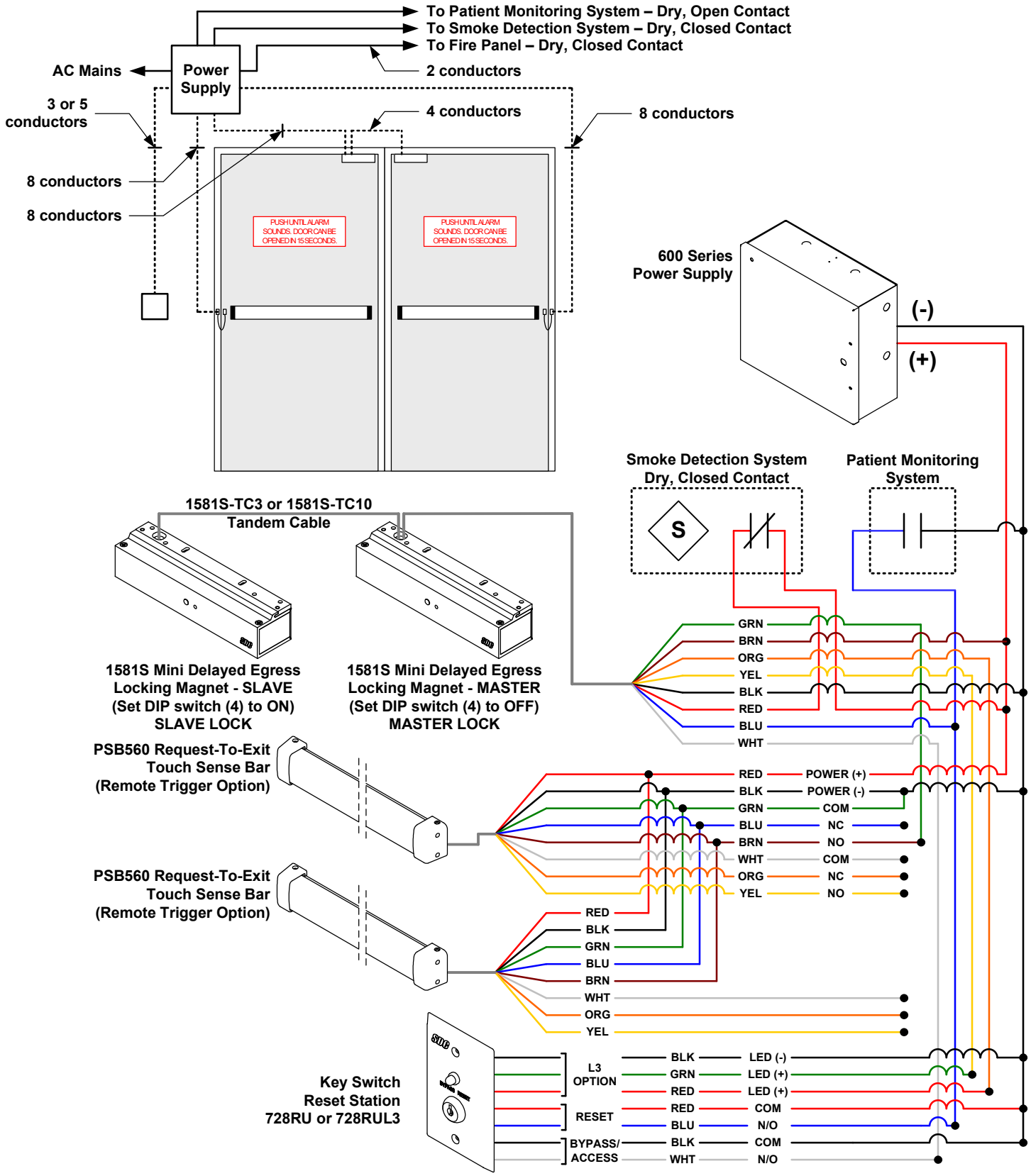

Suggested Optional Equipment

Digital Entry

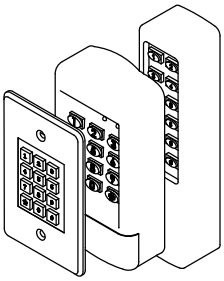

918 / 920 / 923 Digital Keypad
Two relay outputs:
Relay 1 – Reset;
Relay 2 – Choice of momentary or sustained bypass.

Power Supply

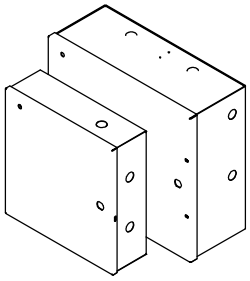

600 Series Power Supply
Field Selectable 12 or 24VDC modular Power Supplies with Fire/Life Safety Emergency Release. Tri-colored LED, separate PTC protected battery charger, and Class 2 Outputs.
602RF 1 Amp
631RF 1.5 Amp
632RF 2 Amp
634RF 4 Amp
636RF 6 Amp

Station Controls, Annunciator Panels, and Consoles

728RU
Single station two function key switch control for alarm reset and access or sustained bypass.

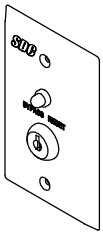

728RUL3
Single station two function key switch control for alarm reset and access with a tri-colored LED showing door condition.

702RU
Single station one function key switch control for alarm reset.

707RU / 708RU
Single station two function key switch control for alarm reset and momentary authorized access (707RU) or sustained bypass (708RU).

101-1A
The single station annunciator is equipped with a tri-colored LED and audible alarm.

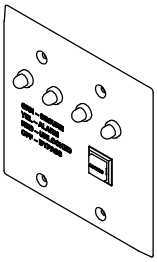

101-4AM
Provides visual & audible annunciation with audible mute for up to four openings.

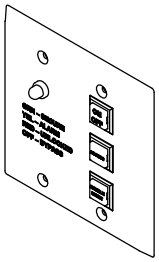

101-PAM
Visual & audible annunciation, timed access, sustained bypass and audible mute.

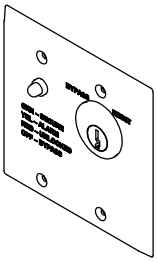

101-1AK
Visual & audible annunciation and a two function key switch for alarm reset and access or sustained bypass.

REMOTE TRIGGER

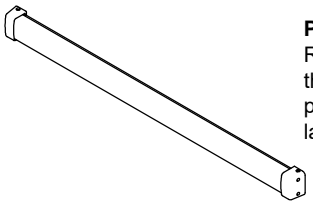

PSB560
Request-to-exit touch sense non-latching bar that will activate the Exit Check® when slight pressure is applied to the bar. For doors without latching.

OPTIONAL FILLER PLATES AND ANGLE BRACKETS

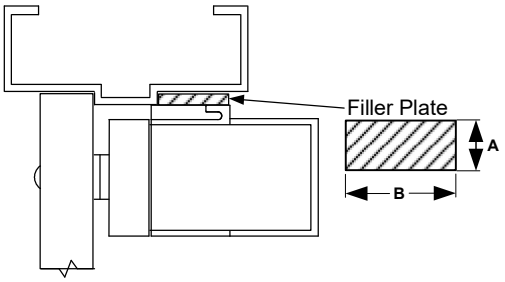

FIG. 2B
With Filler Plate

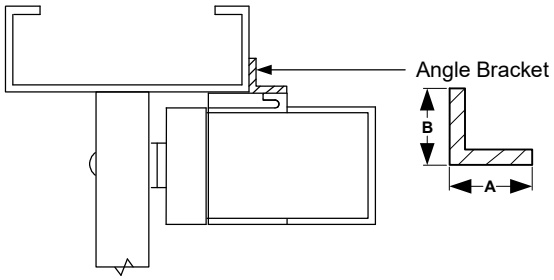

FIG. 2C
With Angle Bracket

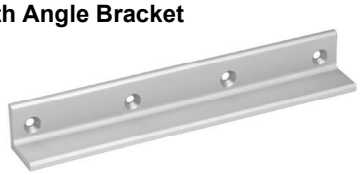

FILLER PLATES: For extension of the stop to provide a proper mounting surface on the underside of the header. **See Figure 2B.**

FOR 1581 SINGLE EMLOCK MODELS

PART #	A	B	(Metric)	LENGTH
FP01	1/8"	1-1/4"	(3 x 32mm)	**8-3/4" (222mm)**
FP02	1/4"	1-1/4"	(6 x 32mm)	
FP03	3/8"	1-1/4"	(10 x 32mm)	
FP04	1/2"	1-1/4"	(13 x 32mm)	
FP05	5/8"	1-1/4"	(16 x 32mm)	

ANGLE BRACKETS: Used as extension on shallow door frames to provide adequate mounting surface. **See Figure 2C.**

FOR 1581 SINGLE EMLOCK MODELS

PART #	A	B	(Metric)	LENGTH
AB01	1"	1"	(25 x 25mm)	**8-3/4" (222mm)**
AB02	1"	1-1/2"	(25 x 38mm)	
AB03	1-1/2"	1-1/2"	(38 x 38mm)	
AB04	2"	1-1/2"	(51 x 38mm)	