INSTRUCTION SHEET

SWM-R SERIES

SWINGOUT WALL MOUNT CABINET

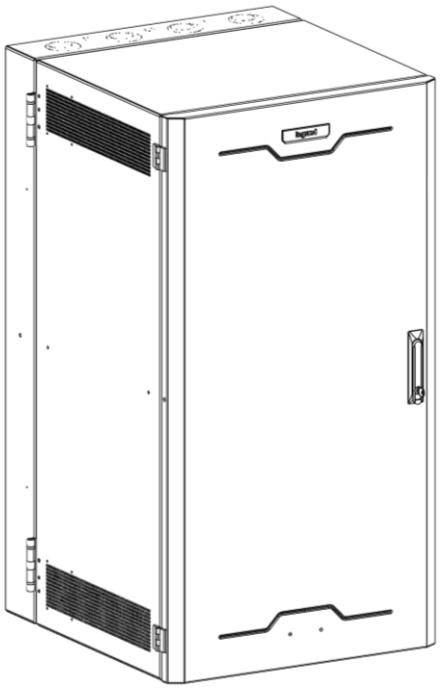

SWINGOUT WALL MOUNT CABINET WITH SOLID DOOR

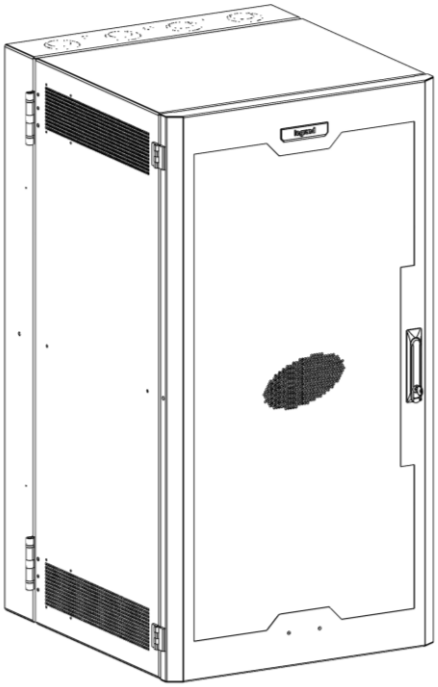

SWINGOUT WALL MOUNT CABINET WITH PERFORATED DOOR

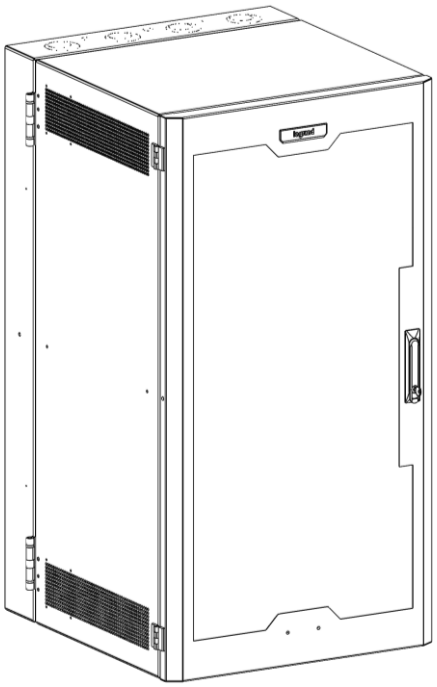

SWINGOUT WALL MOUNT CABINET WITH PLEXIGLASS DOOR

THANK YOU

Thank you for purchasing the SWM Series Wall Cabinet. Please read these instructions thoroughly before installing/assembling this product.

PRODUCT FEATURES

- 26” width provides abundant space for patching
- Ships with front rack rail at a 5.5” setback to accommodate the cable management finger kits (optional)
- Swing open center section allows for easy front and rear access to equipment and cabling
- Available with solid, perforated or plexiglass doors

IMPORTANT SAFETY INSTRUCTIONS / INSTRUCTIONS IMPORTAANTES SUR LA SÉCURITÉ

SAVE ALL INSTRUCTIONS / CONSERVER CES INSTRUCTIONS

DANGER HAZARDOUS VOLTAGE/DANGER HAUTE TENSION

The lightning flash with the arrowhead symbol, within an equilateral triangle is intended to alert the user to the presence of uninsulated dangerous voltage within the product's enclosure that may be of sufficient magnitude to constitute a risk of electric shock to persons.

L'éclair avec le symbole de flèche dans un triangle équilatéral est destiné à alerter l'utilisateur de la présence d'une tension dangereuse non isolée dans l'enceinte du produit qui peut être d'une ampleur suffisante pour constituer un risque de choc électrique pour les personnes.

CAUTION/ATTENTION

The exclamation point within an equilateral triangle is intended to alert the user to the presence of important operating and maintenance (servicing) instructions in the literature accompanying the appliance.

Le point d'exclamation dans un triangle équilatéral est destiné à alerter l'utilisateur de la présence d'importants instructions d'opération et de maintenance (entretien) dans la documentation accompagnant l'appareil.

	WARNING: Failure to read, understand and follow the following information can result in serious personal injury, damage to the equipment or voiding of the warranty. **AVERTISSEMENT:** Ne pas lire, comprendre et suivre les informations suivantes peut entraîner des blessures graves, des dommages à l'équipement ou de la nullité de la garantie.
	CAUTION: To avoid an unstable condition, place heavier components at the bottom of the enclosure. When more than one component is placed in the enclosure, begin at the bottom of the enclosure and place equipment at the lowest available point, evenly distribute weight (horizontally) within the enclosure. Component weight should be distributed as follows: 1/2 of the total component weight (at a minimum) placed in the bottom third of the cabinet 1/4 of the total component weight (at a maximum) placed in the middle third of the cabinet 1/4 of the total component weight (at a maximum) placed in the top third of the cabinet **ATTENTION:** Pour éviter un état instable, placez composants les plus lourds au fond de l'enceinte. Lorsque plus d'un composant est placé dans la enceinte, commencer par le bas de l'enceinte et placer l'équipement à la point le plus bas disponible, de distribuer uniformément le poids (horizontalement) dans le enceinte. Le poids des composants devrait être réparti comme suit: 1/2 du poids total de la composante (au minimum) placé dans le tiers inférieur de l'armoire 1/4 du poids total de la composante (au maximum) placé dans le tiers médian de l'armoire 1/4 du poids total de la composante (au maximum) placé dans le tiers supérieur de l'armoire
	CAUTION: All installation and assembly steps must be performed by qualified personnel. **ATTENTION:** Toutes installation et de montage étapes doivent être effectuées par du personnel qualifié.
	CAUTION: Individual components mounted inside of the wall mount rack must have their own fire enclosure. **ATTENTION:** Les composants individuels montés à l'intérieur du rack doivent avoir leur propre enceinte coupe-feu.

⚠	**CAUTION:** Ensure that the wall has a structural load capacity that will support the weight of the cabinet fully loaded with equipment. **ATTENTION:** Veiller à ce que le mur a une capacité de charge structurelle qui supporter le poids de le cabinet entièrement chargé avec l'équipement.
⚠	**CAUTION:** The following parts are not effectively bonded to the protective earth terminal: Rack rails, lace bars, shelves, baffle, blanking panels, and cable management. If any part needs to be bonded to the protective earth terminal it shall be done in accordance with Article 250 of the National Electrical Code. **ATTENTION:** Les pièces suivantes ne sont pas correctement liés à la borne de terre de protection: rails de rack, des bars de dentelle, des étagères, des chicanes, des panneaux d'obturation, et la gestion des câbles. Si une partie doit être lié à la borne de terre de protection, il doit être fait conformément à l'article 250 du Code national de l'électricité.
⚠	**CAUTION:** Power cord(s), for fans or other accessories, need to be secured to ensure that they are routed away from pinch points and moving parts. **ATTENTION:** Le cordon d'alimentation (s), pour les fans ou autres accessoires, doivent être fixé à veiller à ce que ils sont acheminés loin des points de pincement et des pièces mobiles.
⚠	**CAUTION:** Do not attempt to unload or move the enclosures alone. Make sure to have sufficient amount of personnel and equipment to safely move this product. **ATTENTION:** Ne essayez pas de décharger ou déplacer les enceintes seul. Assurez-vous d'avoir quantité suffisante de personnel et de matériel pour déplacer ce produit en toute sécurité.
⚠	**CAUTION:** To reduce the risk of personal injury, these mounting instructions must be followed and proper weight capacities must be observed. **ATTENTION:** Pour réduire le risque de blessures, ces instructions de montage doivent être respectées et les capacités de poids appropriées doivent être respectées.

WEIGHT RATINGS

Model/Height	Weight Rating
12 RU	225 lbs.
18 RU	325 lbs.
26 RU	350 lbs.

TOOLS REQUIRED

1/2” Socket	7/16” Socket	10mm Socket
3/8” Socket	11/32” Socket	

SUPPLIED HARDWARE

CABLE MANAGEMENT RING

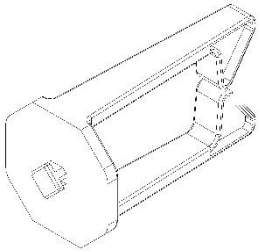

#12-24 SCREW

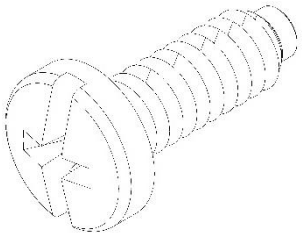

#12-24 CAGE NUT

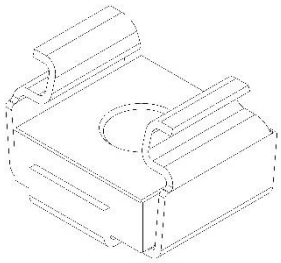

	QTY	QTY	QTY
12 RU	8	50	50
18 RU	8	50	50
26 RU	8	50	50

CABINET INSTALLATION

NOTE(S):

- The cabinet must be installed plumb and level for proper operation.
- SWM center section can be opened from left-to-right or vice versa depending on how backpan is installed.
- Ensure the wall to which the backpan will be mounted consists of at least one layer of 1/2" sheetrock screwed to the studs 16" on center.

1. Separate backpan from center section and determine hinge side.
2. Locate the studs in the wall behind the sheetrock. Align the mounting holes in the cabinet with the studs. Using 5/16” diameter lag bolts with a minimum length of 2 1/2” and flat washers in each mounting hole, secure the cabinet to the wall.

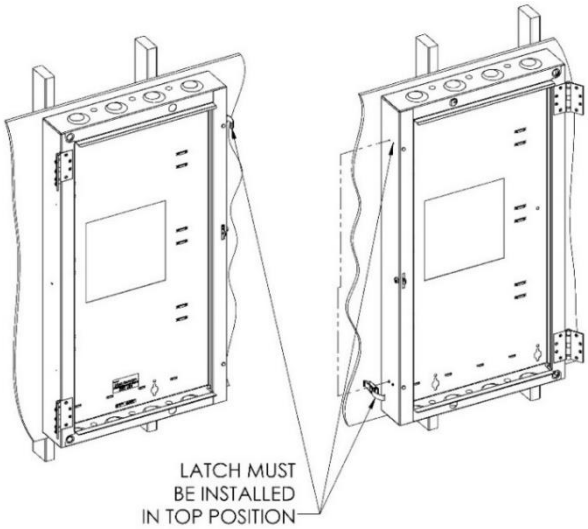

CABINET INSTALLATION (CONTINUED)

3. Attach the assembly aid bracket to the center section as shown below

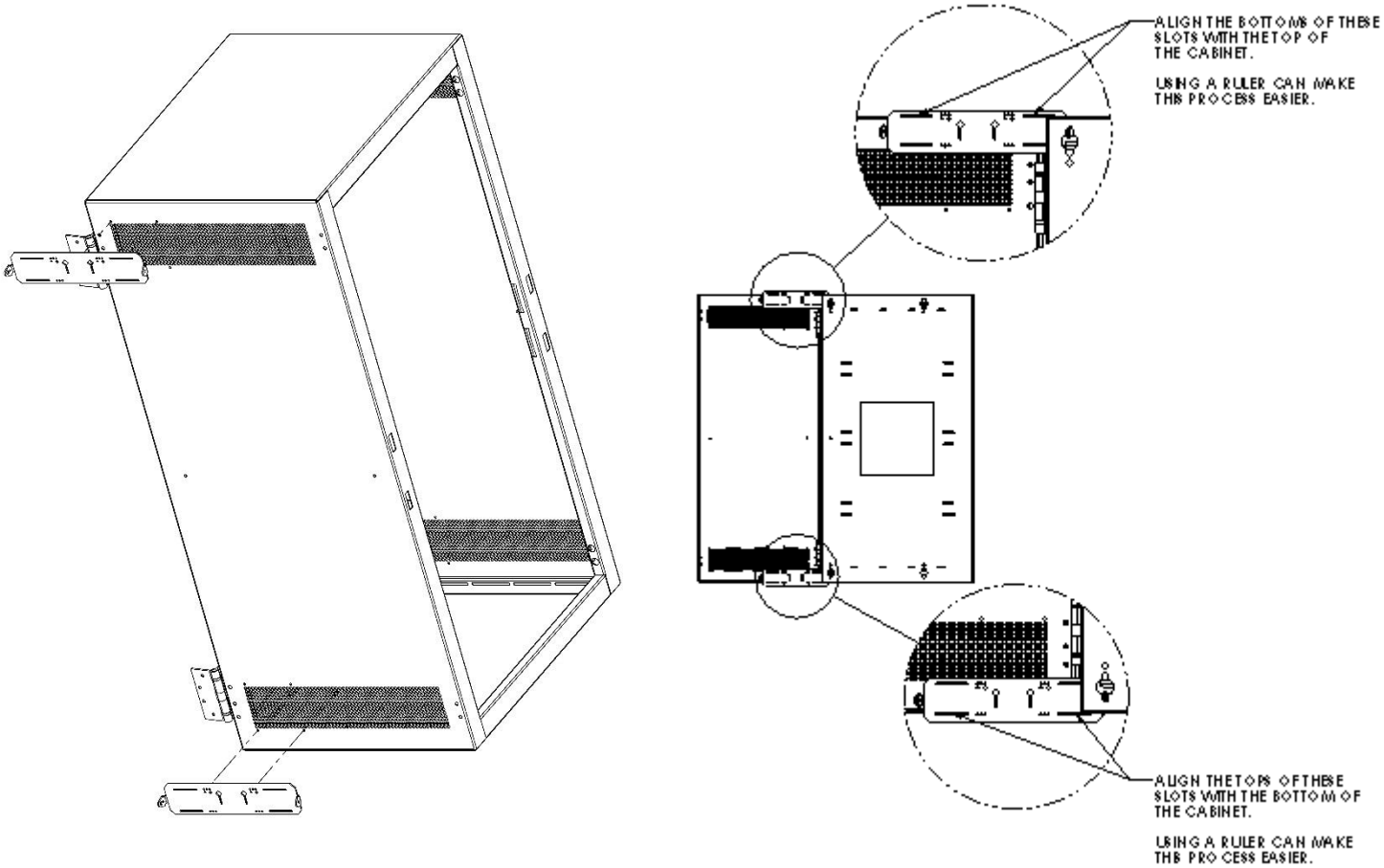

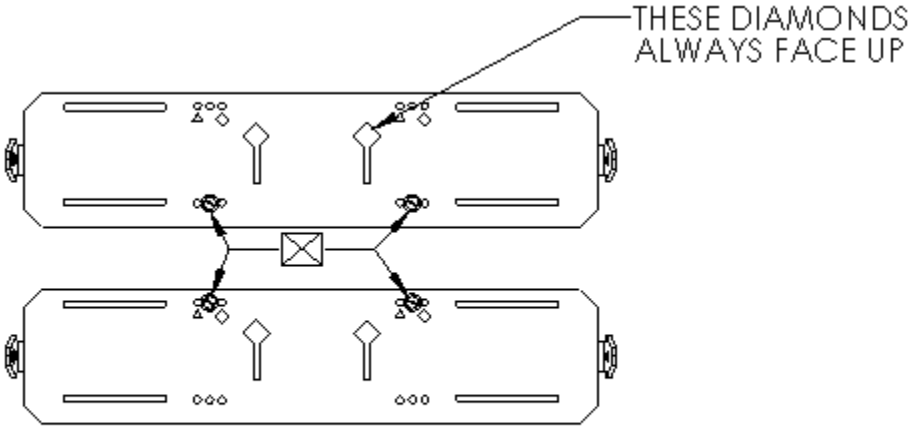

USE THESE HOLES FOR **SWMR** CABINETS FOR LEFT OR RIGHT SWING HINGES

CABINET INSTALLATION (CONTINUED)

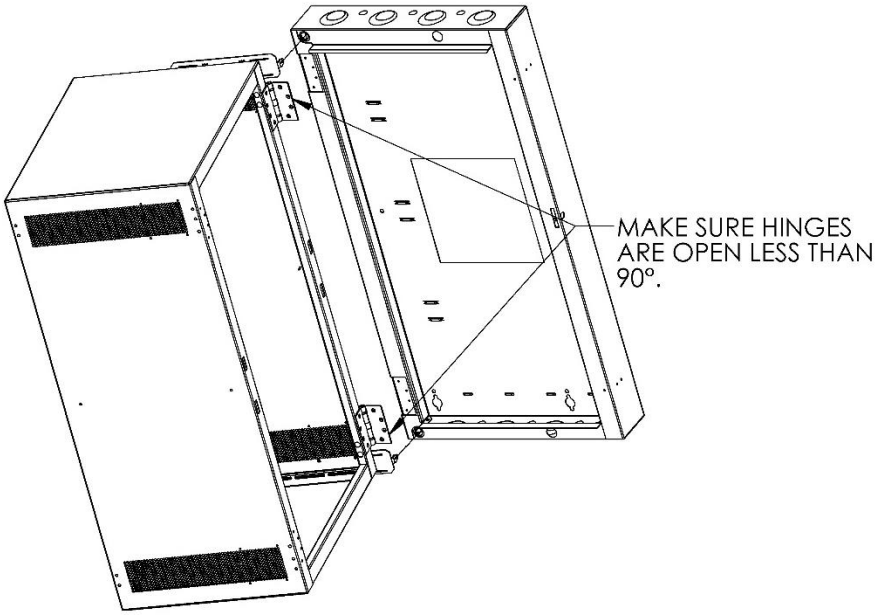

⚠	**CAUTION:** TWO PERSON LIFT
⚠	**CAUTION:** DO NOT LEAVE CENTER SECTION HANGING ON ASSEMBLY AID BRACKETS UNATTENDED

4. HOOK CENTER SECTION (WITH ASSEMBLY AID BRACKETS INSTALLED) ONTO BACKPAN BY INSERTING TABS ON BRACKETS INTO HOLES IN BACKPAN
5. INSTALL SCREWS THROUGH HINGES INTO BACKPAN
6. REMOVE ASSEMBLY AID BRACKETS

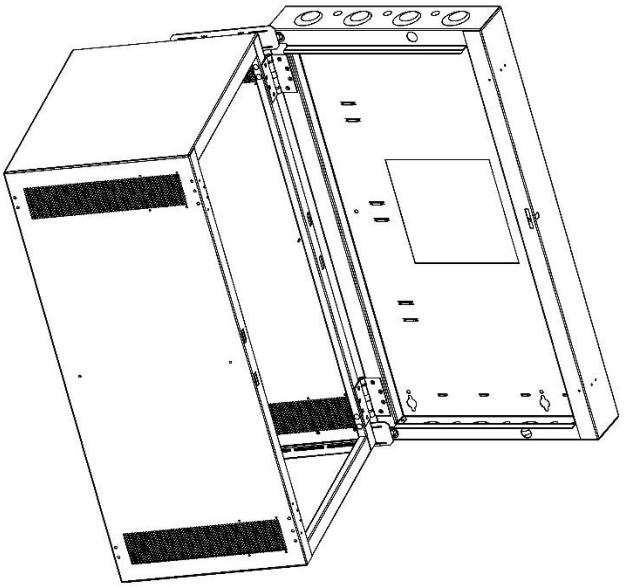

FOR HIGHER RESOLUTION IMAGES OF THE CABINET INSTALLATION PROCESS, SEE DOCUMENT 71602006

CABINET INSTALLATION (CONTINUED)

NOTE: A minimum of 1” clearance on the top and bottom of the cabinet is required.

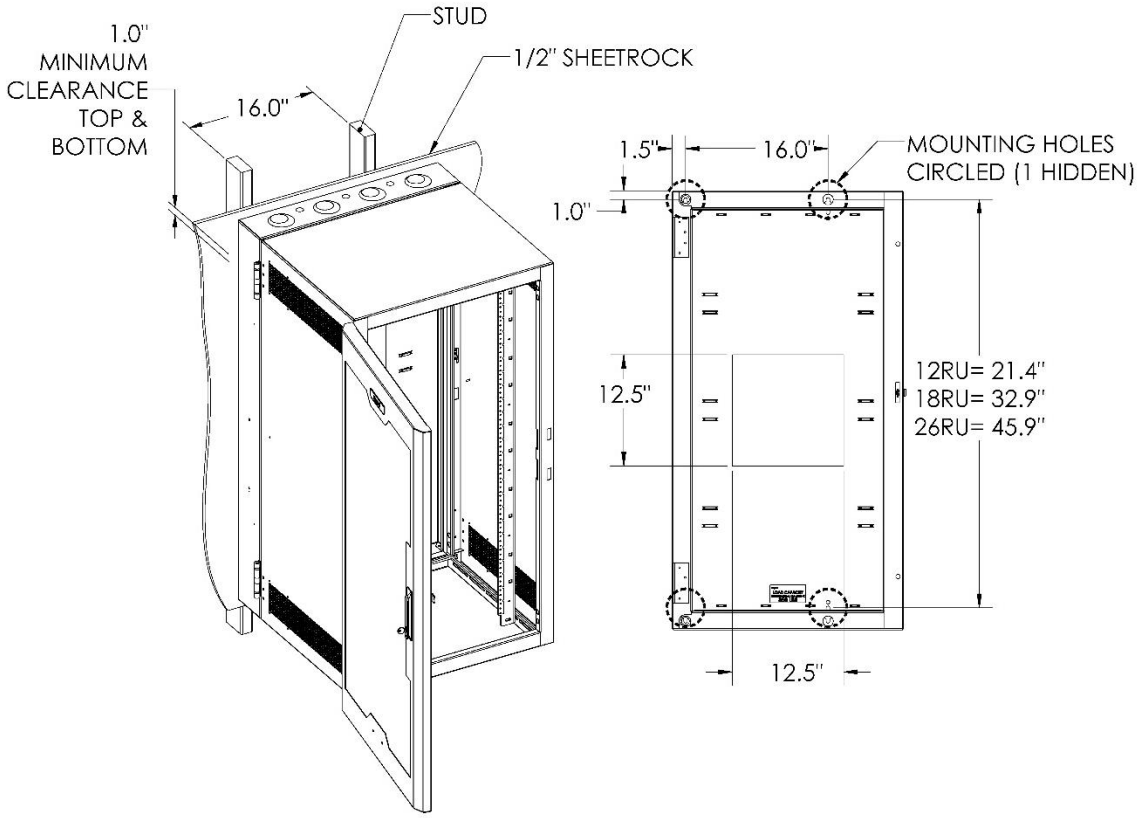

GROUNDING AND BONDING

PET Symbol ⏚	Protective Earth Terminals (PET) are located in backpan of the wall rack. These terminals are marked with the PET symbol Wall rack parts, center Section and door, contain or are provided with bonding points for connection to the backpan /PET. Protective earth and bonding connections shall be in accordance with Article 250 of the National Electric Code.

PARTS LIST	QTY
Bonding wire - 12 AWG wire, two #10 ring terminals, 15” long	2
#10-32 locking nut	4

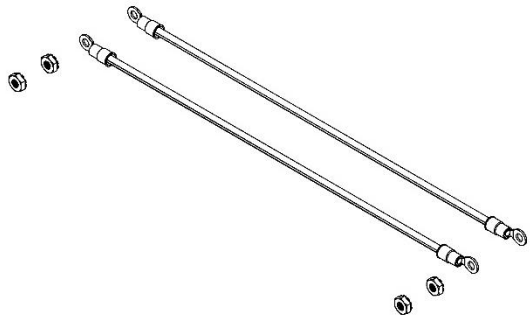

GROUNDING AND BONDING (CONTINUED)

1. Attach **bonding wire** from backpan protective earth terminal (PET) to nearest center section bonding stud using hardware provided.
   NOTE: The main protective earth ground needs to be the first terminal placed on the PET and this terminal needs to be secured on its own with a nut. The bonding wire for the center section can be added to the PET after securing the nut for the main ground.
2. Attach **bonding wire** to door bonding stud with nut (included).
3. Attach remaining door bonding wire to nearest center section bonding stud using hardware provided.

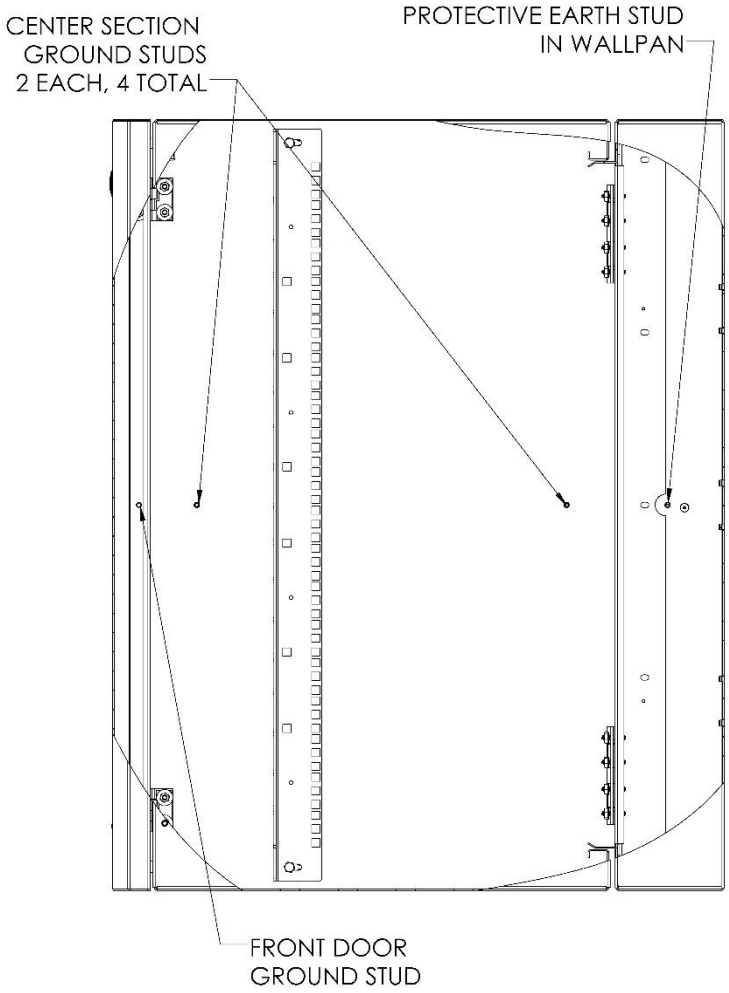

OPTIONAL: WIRE MANAGEMENT RING INSTALLATION

If needed, install the supplied wire management rings to the pre-installed rackrail on both sides of the rack as shown. Align the square feature on the back side of the cable management ring with the square hole on the rackrail. Press the cable management ring in and rotate 1/4 of a full turn to lock in place.

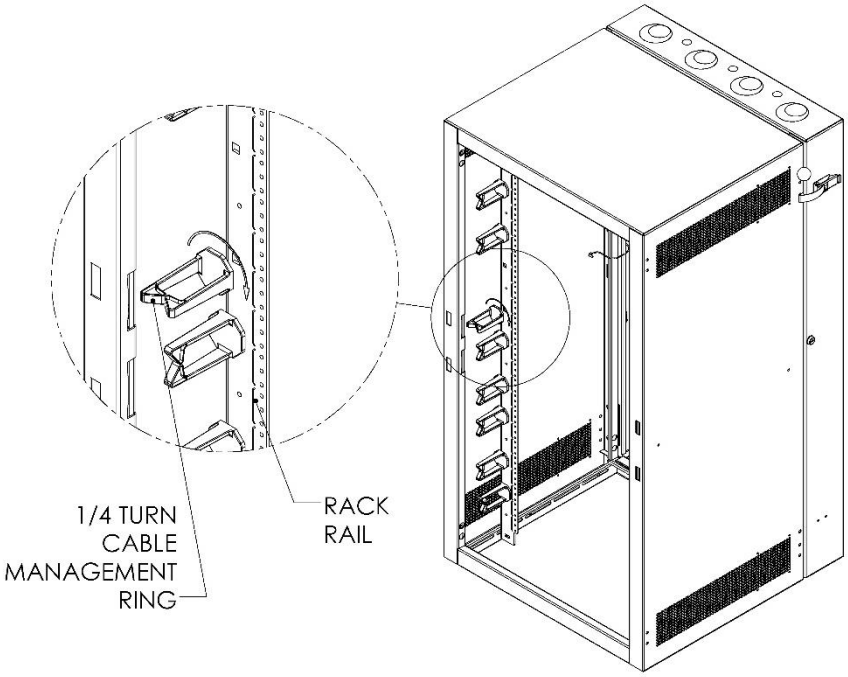

DOOR SWING REVERSAL

1. Remove the two (2) M6 hex nuts and (2) washers from both top and bottom hinges to remove the door (remove 4 nuts and 4 washers total).

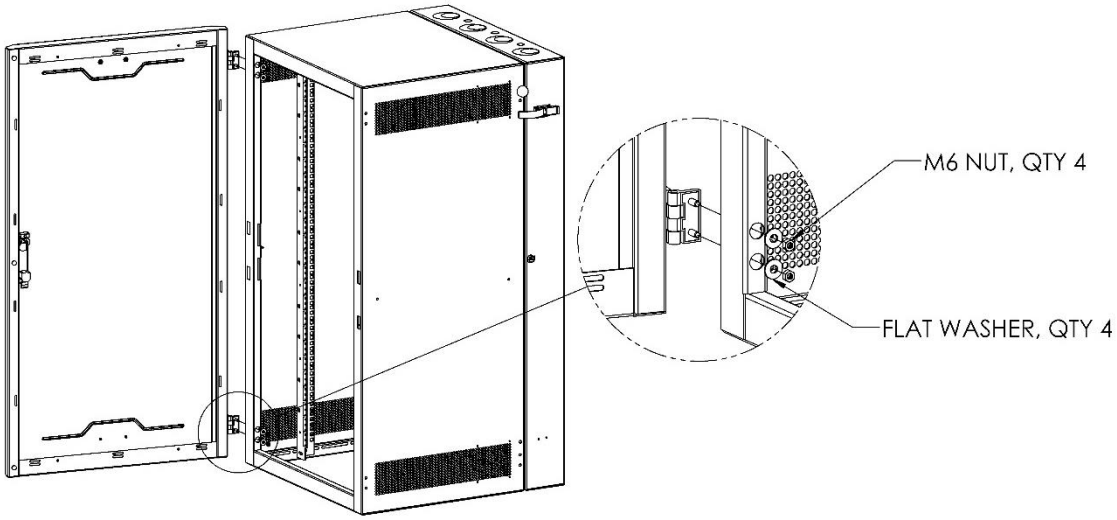

DOOR SWING REVERSAL (continued)

2. Reverse the door to install to the opposite side of the rack. Install the two (2) M6 hex nuts and (2) washers to the top and bottom hinges.

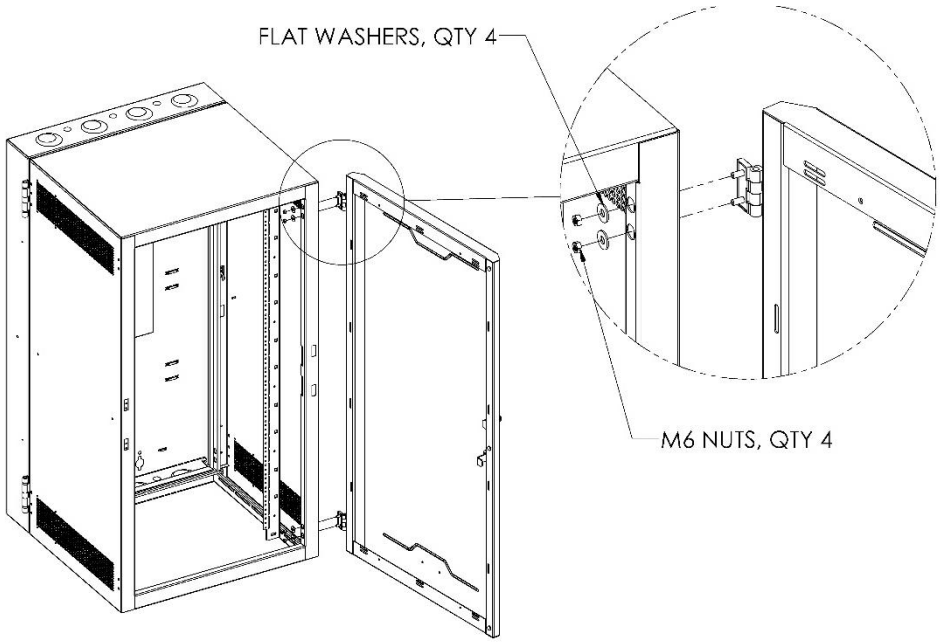

3. As shown above, the badge and door handle will need to be reversed. See below.
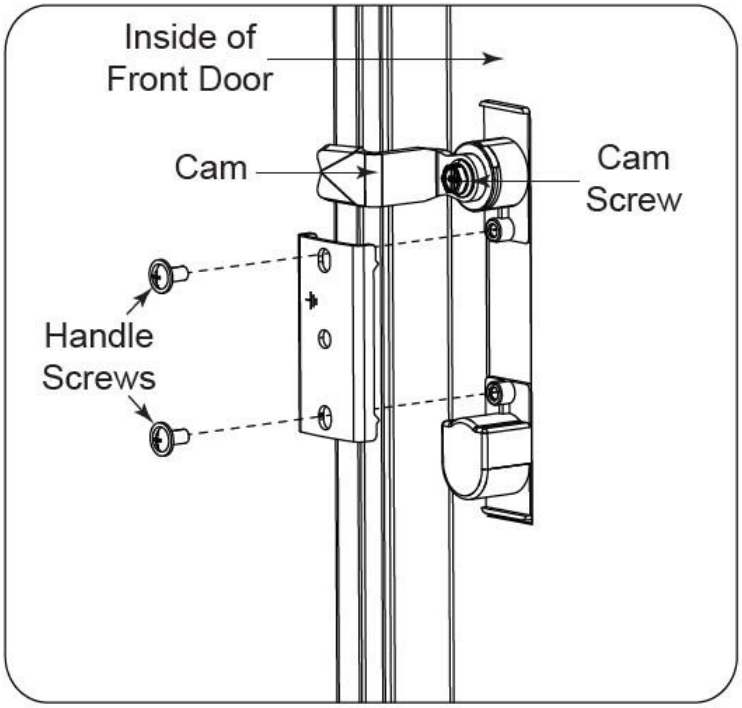
1. Remove and attach the rubber bumpers to the holes on the opposite side of the hinges.
2. Remove cam screw and cam.
3. Remove the (2x) handle screws as shown.
4. Rotate and reattach the handle to the door.
5. Rotate cam 180°, and reattach cam with screw (cam facing the outside of enclosure).
6. Remove the (2x) Speednuts from the back of the badge and remove the badge from the door.
7. Rotate the badge and reinstall on the opposite side of the door.
8. Reattach the door bonding wire to the front door to ensure proper bonding to the backpan