Macurco™ DVP-120C

Detection and Ventilation Control Panel with BACnet

User Instructions

IMPORTANT: Keep these user instructions for reference.

www.macurco.com 1-844-325-3050 support@macurco.com 3601 N St. Paul Ave
Sioux Falls, SD 57104

Table of Contents

1 General Safety Information 7
1.1 List of warnings 7
2 Use Instructions and Limitations 8
2.1 DVP-120C General Description 8
2.2 DVP-485B Modbus® Adapter 8
2.3 MRS-485 Modbus Adapter 8
2.4 Features 9
2.5 Specifications 9
3 Installation Instructions 10
3.1 Location & Mounting 10
3.2 Installation 11
3.2.1 General Wiring Information 11
3.2.2 Power Connection 12
3.2.3 Remote Sensor Connection 13
3.2.4 Relay Connection 15
3.2.5 Horn & Strobe Connection 16
3.2.6 Interfacing Macurco Sensors 16
4 Operations 22
4.1 Power up 22
4.2 Initial Operating Mode 22
4.2.1 Status Light Display 22
4.3 User Interface 23
4.3.1 Cursor Keys 23
4.3.2 MENU Key 24
4.3.3 Hush Key 24
4.4 Normal Status Display 24
4.5 ALARM Status Display 25
4.6 Warning Status Display 26
4.7 Trouble Status Display 26
4.8 Unoccupied Failure Display 27
4.9 Occupied Failure Display 28
4.10 Calibration Due Warning Display 28

www.macurco.com 1-844-325-3050 support@macurco.com 3601 N St. Paul Ave Sioux Falls, SD 57104

4.11 Calibration Overdue Trouble Display 29
4.12 Ventilation Control 30
4.12.1 Zone Signal Display 30
4.13 System Configuration 31
4.13.1 System Menu 32
4.13.2 Configure System Submenu 32
4.13.3 Configure Sensors Submenu 40
4.13.4 Configure Relays, Horn & Strobe Submenu 42
4.13.5 Configure Horn Submenu 43
4.13.6 Configure Strobe Submenu 43
4.13.7 Configure Zones Submenu 44
4.13.8 Configure Signals Submenu 48
5 BACnet 52
5.1 General Information 52
5.1.1 Analog input – Sensor ID 52
5.1.2 Analog Input – Gas Reading 52
5.1.3 Binary Input – MRS Trouble 52
5.1.4 Binary Input – Over Range 52
5.1.5 Binary Input – Trouble 52
5.1.6 Binary Input – DVP Com Error 52
5.2 Macurco Network Parameter Utility (NPU) 52
5.3 BACnet Connection 54
5.3.1 Serial RS-485 to USB Wiring 55
5.3.2 BACnet MS/TP to BACnet/IP 56
5.4 BACnet Software 56
6 Troubleshooting 56
6.1 System Status Light 56
6.1.1 Input Channel Trouble 57
6.1.2 Internal Controller board Trouble 58
6.2 Timed Ventilation Problem 58
6.3 No Power 58
6.4 LCD Display Unreadable 58
6.5 Keypad does not respond 59

www.macurco.com 1-844-325-3050 support@macurco.com 3601 N St. Paul Ave Sioux Falls, SD 57104

6.5.1 LCD shows KEYS LOCKED 59
6.5.2 After silencing Alarm, Warning or Trouble 59
6.6 Power Failure 59
6.7 MRS-485 Modbus Application 59
6.7.1 Normal Operation 59
6.7.2 Unknown Sensor Code 59
6.7.3 Error Codes 59
6.7.4 Dip Switch Settings Codes 60
7 Testing & Maintenance 61
7.1 Testing 61
7.1.1 Keypad Test 61
7.1.2 Functionality Test 61
7.2 Maintenance 62
8 Appendix A – Table of Figures 63
9 Appendix B – Quick Setup 67
9.1 Configure System Submenu 70
9.1.1 Set Time of Day 70
9.1.2 Set Day of Week 70
9.1.3 Load Default Configuration 70
9.1.4 Change Password 70
9.1.5 Enter Password 71
9.2 Configure Sensors Submenu 71
9.2.1 See section 4.2 Initial Operating Mode for more detail 71
9.2.2 See section 4.3 User Interface for more detail 71
9.2.3 See section 4.13 System Configuration for more detail 71
9.2.4 See section 4.13.3 Configure Sensors Submenu for more detail 71
9.3 Configure Relays, Horn & Strobe Submenu 72
9.3.1 See section 4.13.4 Configure Relays, Horn & Strobe Submenu for more detail 72
9.4 Configure Zones Submenu 73
9.4.1 See section 4.13.7 Configure Zones Submenu for more detail 73
9.5 Configure Signals Submenu 75
9.5.1 See section 4.13.8 Configure Signals Submenu for more detail 75
10 Appendix C – Setup Record 76

www.macurco.com 1-844-325-3050 support@macurco.com 3601 N St. Paul Ave Sioux Falls, SD 57104

11 Appendix D – DVP-120 Quick Start Guide 77
12 Macurco Gas Detection Product limited warranty 80
Technical Support Contact Information 80
General Contact Information 80

www.macurco.com 1-844-325-3050 support@macurco.com 3601 N St. Paul Ave Sioux Falls, SD 57104

1 General Safety Information

1.1 List of warnings

⚠ WARNING
Each person using this equipment must read and understand the information in this User manual before use. Use of this equipment by untrained or unqualified persons or use that is not in accordance with this user manual, may adversely affect product performance.
This equipment helps monitor for the presence and concentration level of certain specified airborne gases. Misuse may produce an inaccurate reading, which means that higher levels of the gas being monitored may be present and could result in overexposure. For proper use, see supervisor or User manual, or call Macurco Technical Support at 1-844-325-3050.
DVP-120C may not function effectively below 32°F (0°C) or above 120°F (49°C). Using the equipment outside of this temperature range may adversely affect product.
High voltage terminals (120/240 VAC) are located within the DVP-120C, presenting a hazard to service technicians. Only qualified technicians should open the DVP-120C case and service the internal circuits. Ensure power is removed from the DVP-120C prior to servicing the unit.
Immediately exit any environment that causes an alarm condition on the sensor.
Each time the unit is turned on it performs a self-test, which activates the audible and visual alarms. If the self-test fails, or all the alarms do not activate, do not use and contact Technical Support at 1-844-325-3050.
Do not cover or obstruct audible alarm opening or visual alarm LED. Doing so may adversely affect product performance.
Use only for monitoring the gases which the sensors and equipment are designed to detect. Failure to do so may result in exposures to gases not detectable and result in serious injury or death. For proper use, see supervisor or User manual, or Contact Technical Support at 1-844-325-3050.
Failure to follow instructions outlined in this user manual can result in sickness or death.

www.macurco.com 1-844-325-3050 support@macurco.com 3601 N St. Paul Ave Sioux Falls, SD 57104

2 Use Instructions and Limitations

2.1 DVP-120C General Description

The DVP-120C is an exhaust fan controller and alarm interface. When used in conjunction with Macurco gas detectors, it provides automatic controls to help maintain an acceptable environment in enclosed facilities. The DVP-120C is frequently used in parking garages, warehouses, and vehicle maintenance facilities. The DVP-120C system is designed to meet specifications for safety in enclosed parking garages, including the Uniform Building Code and OSHA 50ppm CO requirements. The standard DVP-120C can control up to 99 digital addressable sensors and is compatible with Macurco CM-6 and TX-6-ND detectors ONLY. The DVP-120C is ready for operation after the wiring is complete and the user system configuration is entered.

2.2 DVP-485B Modbus® Adapter

The DVP-485B Modbus adapter, installed in DVP-120C, provides a RS-485 BACnet output. System wiring includes RS-485 serial detector interface as well as main power connection for the DVP-120C, the fan control and alarm connections from the DVP-120C to the building ventilation and automation systems. The RS-485 serial interface is from the DVP-120C to the remote detectors. Power to these detectors is provided by an external 24VAC or VDC low voltage power supply. See section 3.2.3 Remote Sensor Connection for more information regarding remote power supplies.

2.3 MRS-485 Modbus Adapter

The Macurco MRS-485 adapter is an accessory used to convert the 4-20mA analog signal from Macurco 6-Series type detectors to a digital signal for use with the DVP-120C and other multipoint addressable systems. The Macurco MRS-485 simply plugs into the back of the detector and a single screw fastens it in place. The MRS-485 accepts the 4-20mA output and is powered from the same connection as the detector. The MRS-485 mounts to a Macurco 6-Series detector installed on a 4”x 4” electrical box electrical box supplied by the contractor.

⚠ WARNING
Each person using this equipment must read and understand the information in this User manual before use. Use of this equipment by untrained or unqualified persons or use that is not in accordance with this user manual, may adversely affect product performance.

www.macurco.com 1-844-325-3050 support@macurco.com 3601 N St. Paul Ave Sioux Falls, SD 57104

2.4 Features

- LCD display showing the status of each transducer and relay
- External keypad for user selection of the transducer/alarm display and setting the configuration (password protected)
- Up to three ventilation control zones can be defined
- Each zone can be controlled based on transducer signals and/or time of day
- Each relay is configurable with a delay before activation and minimum on time
- Fail-safe operation can be implemented
- Lockable NEMA 1 type enclosure
- Modular input and output connectors
- One RS-485 digital input channels - 99 addressable sensors
- RS-485 digital output channel for BACnet
- Compatible with Macurco CM-6, TX-6-ND, and MRS-485 adapter, Horn & Strobe Combo
- Three 10A, 240 VAC SPDT Dry Contact relays
- 24VDC Drivers for external Horn and Strobe
- BTL Listed
- ETL Listed to UL 2017[1] (Type SM)

[1]Where required by federal, state, local regulations or the Authority Having Jurisdiction, DVP-120C is required to be used with Listed Horn/Strobe model 78-2900-0211-X to meet the 85dB(A) Audibility requirements of Standards UL 2017.*
**Where "X" represents lens cover color, R for red lens cover, G for green lens cover, B for blue lens cover, O for amber lens cover, C for clear lens cover.*

2.5 Specifications

- Size: 10.5" x 12.5" x 2." (267 mm x 318 mm x 51 mm)
- Weight: 6 ½ lb (2.9 kg)
- Enclosure: NEMA 1 Type
- Operating Temperature: 32° to 120°F (0° to 49°C)
- Operating Humidity: 0% to 90% RH non-condensing
- Power Input: 90 – 250 VAC, 1 Amp, 47 – 63 Hz, single phase
- Relay Rating (3): SPDT, 120/240 VAC, 10 A resistive
- LCD Display: 2 rows of 16 characters with backlight
- Status Indicators (LED): Power/Trouble, ALARM/warning, Hush, Relay 1, Relay 2 & Relay 3
- Audible indicator: Internal buzzer, 90 dBA at 1ft
- External Drivers (2): 24VDC, maximum 250 mA
- Carbon Monoxide (CO) Range: 0 – 200ppm
- Nitrogen Dioxide (NO2) Range: 0 – 20ppm
- Relay on Delay: 0 – 15 minutes in 1 second increments
- Relay Minimum Run Time: 0 – 15 minutes in 1 second increments

www.macurco.com 1-844-325-3050 support@macurco.com 3601 N St. Paul Ave Sioux Falls, SD 57104

3 Installation Instructions

Gas detection and exhaust fan control are provided by a Macurco DVP-120C system. System wiring includes the main power connection for the DVP-120C, the fan control connections and/or alarm connections from the DVP-120C to the building ventilation and automation systems. The DVP-120C also includes the RS-485 serial interface from the DVP-120C to the MRS-485 and remote detectors. Power to the MRS-485 and detectors is provided by isolated/remote low voltage power supply.

The system is configured by the user through the LCD display and keypad. The system display provides the user with the system status and the status of each configured sensor. In addition, all control functions of the DVP-120C may be accessed through the system display and keypad.

⚠ WARNING
This equipment helps monitor for the presence and concentration level of certain specified airborne gases. Misuse may produce an inaccurate reading, which means that higher levels of the gas being monitored may be present and could result in overexposure. For proper use, see supervisor or User manual, or call Macurco Technical Service at 1-844-325-3050.

This DVP-120C system should be used with Macurco™ CM-6 and TX-6-ND transducers and each unit will measure the level of the target gas (i.e. CO, and NO_2) and provide this information to the DVP-120C over Modbus communication loop. The transducers operate on low voltage (24VDC). All power and signal connections for the transducers are provided via unshielded two conductor cable from an external power source. DVP-120C Modbus applications use shielded 3-conductor wire with one twisted pair providing a pair for signal (A & B), common (COM) and shield ground (SHD) connections. The DVP-120C control panel provides three relays which can be used for ventilation fan control or alarm signaling. These relays (SPDT - Form C) are for pilot duty only, capable of switching 10 amp loads up to 240 VAC. Main power wiring should conform to national and local electrical codes and may require separate inspections and certification. Contact your local building authority for further details.

⚠ WARNING
DVP-120C may not function effectively below 32°F (0°C) or above 104°F (40°C). Using the equipment outside of this temperature range may adversely affect product.

3.1 Location & Mounting

The DVP-120C should be installed in a centralized location, easy to access and protected weather and other environmental elements. DVP-120C is intended for indoor use only. A Mechanical room, Alarm Control Room or other similar areas are recommended.

Mounting holes are provided in the DVP-120C case at the four corners. The top two are keyhole shaped so that the panel can be hung and then the two bottom screws driven to hold the panel. See figure 3-1. The panel should be mounted with sufficient space around the panel for access to conduit entry holes provided on the top, bottom and right side of the panel.

www.macurco.com 1-844-325-3050 support@macurco.com 3601 N St. Paul Ave Sioux Falls, SD 57104

Figure 3-1 Mounting Holes

3.2 Installation

3.2.1 General Wiring Information

⚠ WARNING
High voltage terminals (120/240 VAC) are located within the DVP-120C, presenting a hazard to service technicians. Only qualified technicians should open the DVP-120C case and service the internal circuits. Ensure power is removed from the DVP-120C prior to servicing the unit.

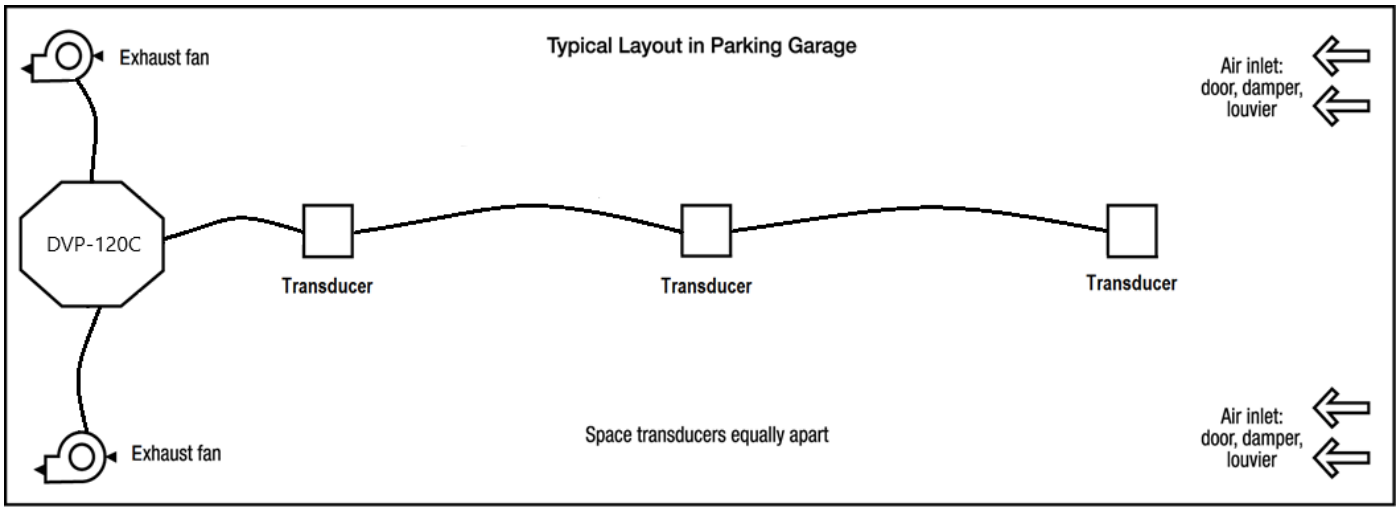

Figure 3-2 Typical Layout

www.macurco.com 1-844-325-3050 support@macurco.com 3601 N St. Paul Ave Sioux Falls, SD 57104

With the exception of the safety ground, all field wiring is completed via modular connectors (provided). After wiring, simply plug the modular connectors into the matching connectors on the printed circuit board (PCB).

Note: It is recommended to always install with wires enclosed within the rigid metallic conduit.

The power and signal connections to the remotely mounted sensors should be size AWG18 (minimum) for short runs. Refer to Table 3-2 for recommended wire gauges.

Do not bundle sensor power and/or signal connections with other AC power cables to prevent electrical interference. If other AC power connections must be bundled with the DVP-120C sensor cables, the sensor connections should be made with two twisted pairs of the appropriate gauge, with an overall foil and braid shield. All shields should be terminated at the DVP-120C end of the cable only. A ground stud is provided.

The power connections to the MRS-485 and remote mounted sensors should be size AWG18 (minimum) for short runs. Refer to Table 3-2a for recommended wire gauges. The power for the MRS-485 adapter is connected via a two-terminal screw type connector, 12 to 24 VAC or 12 to 24 VDC and no polarity.

The MRS-485 adapter output is wired in the standard 2W-Modbus circuit definition with selectable built-in terminating resistors at the ends of the RS-485 bus. It is recommended to always use twisted wires to reduce noise and allow for reliable data communication over greater distances. For best performance use shielded 3-conductor wire with one twisted pair providing a pair for signal (A & B), common (COM) and shield ground (SHD) connections. Use at least 3-conductor wire with one twisted pair providing a pair for signal (A & B) and common (COM) connections. The Macurco MRS-485 Modbus output is connected via a four-terminal screw type connector.

Running the Modbus cable adjacent to or in the same conduit with high voltage wires is not recommended as there may be interference from the high voltages near the bottom left corner of the panel.

3.2.2 Power Connection

The main power cable should be routed into the bottom left conduit entry. Macurco recommends a minimum wire size of AWG18 and the wire insulator must be rated for 140°F (60°C) service. The modular connector will accept wire from 12 to 24 AWG. The safety ground wire should be secured to the ground stud at the bottom left of the cabinet with the lock washer and nut supplied. Use a ring terminal for the ground connection. Refer to Table 3-1 for DVP-120C power connections. The line and neutral wires should be stripped 1/4 in. (6.5 mm), insert the wire into the wire cavity of the modular connector and tighten the screw clamp. Ensure that the wire cannot be easily pulled from the connector. Plug the modular connector into AC~ on the PCB and ensure that it latches into the header properly.

Signal	Connector	Pin Number
Line (120/220/240/250 VAC)	AC~	3
Neutral	AC~	1
Ground	Ground Stud	n/a

Table 3-1 Main Power Connection

www.macurco.com 1-844-325-3050 support@macurco.com 3601 N St. Paul Ave Sioux Falls, SD 57104

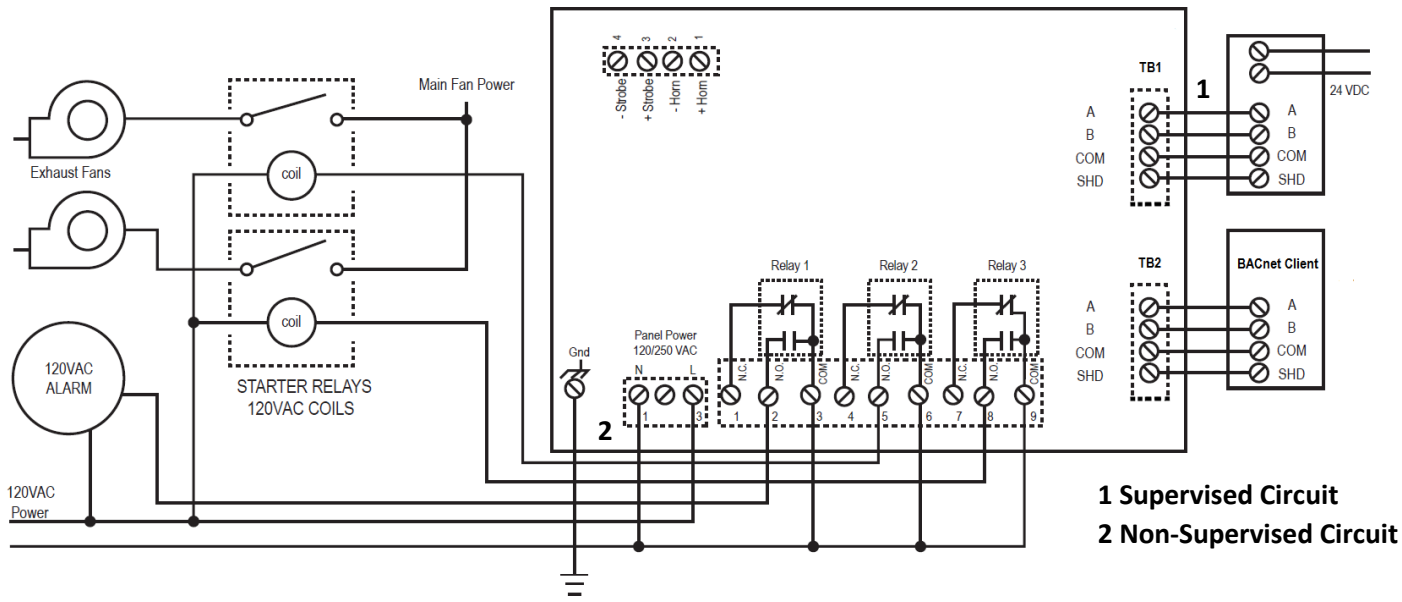

Figure 3-3 System Wiring Diagram

3.2.3 Remote Sensor Connection

Figure 3-4 DVP-120C Internal View

www.macurco.com 1-844-325-3050 support@macurco.com 3601 N St. Paul Ave Sioux Falls, SD 57104

Remote sensors must be connected at RS-485 connection labeled TB1 (Refer Figure 3-10). A Modbus over Serial Line Cable should be shielded for best performance. The shield should be connected on each detector at SHD terminal and connected to a ground terminal or chassis only at one end of the bus. An RS485-MODBUS must use a balanced pair (for A-B) and a third wire (for the Common). For RS485-MODBUS, Wire Gauge must be chosen sufficiently wide to permit the maximum length (1000 m or 3281ft). AWG 24 is always sufficient for the MODBUS Data. Category 5 cables may operate for RS485-MODBUS, to a maximum length of 600 m 1968.5 ft. For the balanced pairs used in an RS485-system, wire with a characteristic impedance of higher than 100 Ohms may be preferred, especially for 19200 and higher baud rates.

Note: It is recommended to always use twisted wires to reduce noise and allow for reliable data communication over greater distances. Use at least 3-conductor wire with one twisted pair providing a pair for signal (A & B) and common (COM) connections.

For best performance use shielded 3-conductor wire with one twisted pair providing a pair for signal (A & B), common (COM) and shield ground (SHD) connections.

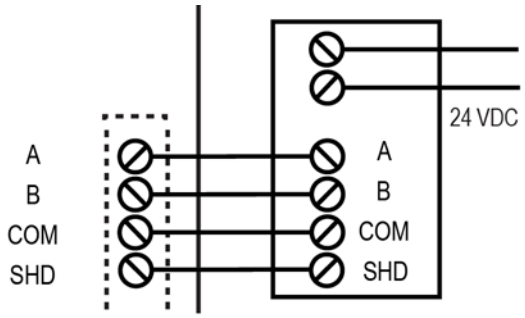

Figure 3-6 MRS-485 Wiring

3.2.3.1 Topology

An RS485-MODBUS configuration without repeater has one trunk cable, along which devices are connected, directly (daisy chaining) or by short derivation cables. The trunk cable, also named “Bus”, can be long. Its two ends must be connected on Line Terminations. (see Line Termination - End of Line Resistor section). The use of repeaters between several RS485-MODBUS is also possible.

The DVP-120C has a single Modbus termination block that will accept two trunk cable connections allowing for two MODBUS communication lines. The Trunk cable must be wired in parallel from the panel to the end of line with no off shoots “T-tapping”.

3.2.3.2 Length

The end to end length of the trunk cable must be limited. The maximum length depends on the baud rate, the cable (Gauge, Capacitance or Characteristic Impedance), the number of loads on the daisy chain, and the network configuration (2-wire). For a maximum 9600 Baud Rate and AWG26 (or wider) gauge, the maximum length is 1000m 3281ft. The derivations must be short, never more than 20m 65.5ft. If a multi-port tap is used with n derivations, each one must respect a maximum length of 40m 131ft divided by n.

3.2.3.3 Grounding

The Shield (SHD) must be connected directly to protective ground, preferably at one point only for the entire bus.

www.macurco.com 1-844-325-3050 support@macurco.com 3601 N St. Paul Ave Sioux Falls, SD 57104

3.2.3.4 Power Wire

All field wiring is completed via modular connectors (provided). After wiring, simply plug the modular connectors into the matching connectors on the MRS-485. The power connections to the remotely mounted detectors should be size AWG18 (minimum) for short runs. Since Macurco detectors are rated for operation between 12 and 24 VDC or VAC, the voltage drop between the power supply and the MRS-485 should not be an issue if the recommended power wire gauge guidelines in are followed. The terminals will accept wire from 16 to 28 AWG. To install a wire, strip back approximately 0.25 in. (6 mm) of insulation and insert the bare wire into the terminal. Tighten the screw clamp and ensure that the wire cannot be easily pulled from the connector.

3.2.3.5 External Power Supply

Select a UL recognized NEC Class 2 power supply which can power the MRS-485 units connected to 6-Series detectors.

- Each MRS-485 is rated at 3.25W with a detector connected.
- The minimum power which the power supply needs to deliver for 12 detectors is figured as:

  12 detectors x 3.25 W per detector = 39W

- Therefore, a 24VDC, 60W power supply will work.

Wire gauge	Maximum Run Length	
	(feet)	(meters)
18	263	80
16	418	127
14	665	203
12	1058	322

Table 3-2 Wire selection for a 60W power supply

3.2.4 Relay Connection

All poles of the three relays are available at the modular connector R1 R2 R3 (see Figure 2 for details). R1 R2 R3 is a 9-position variant of the high voltage modular connector used for power input. Each terminal can accommodate a wire size from 12 to 24 AWG.

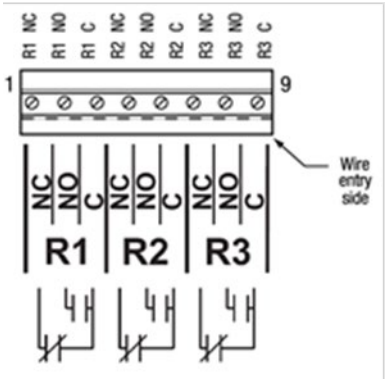

Figure 3-7 Relay Connector

To install the wiring for the relays, disconnect the connector from the header on the PCB. Strip the insulation off each wire back approximately 0.25 in. (6.5 mm), insert the bare wire into the terminal and tighten the screw clamp. Ensure that the wire cannot easily be pulled from the connector.

www.macurco.com 1-844-325-3050 support@macurco.com 3601 N St. Paul Ave Sioux Falls, SD 57104

3.2.5 Horn & Strobe Connection

The external horn and strobe connections are available at the modular connector S H (see Figure 2 for details). S H as a 4-position connector, similar to the sensor interface connectors.

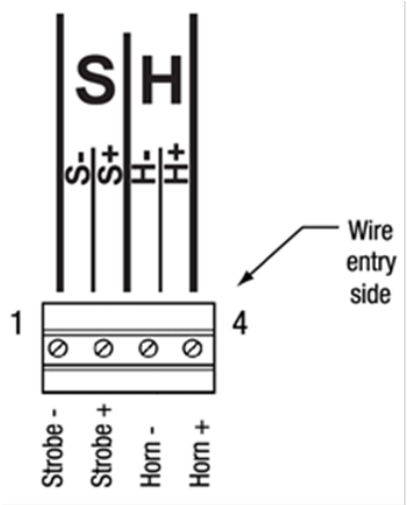

Figure 3-8 Horn & Strobe Connector

To install the wiring for the horn or strobe, disconnect the connector from the header on the PCB. Strip the insulation off each wire back approximately 0.25 in. (6 mm), insert the bare wire into the terminal and tighten the screw clamp. Ensure that the wire cannot easily be pulled from the connector. When all wires are connected, seat the modular connector into the PCB header; ensure that the latch engages. Refer to Table 3-3 for recommended wire gauge vs. run length for the horn & strobe functions (maximum 2.5-volt drop in the wire). The Strobe and Horn circuits are Class 2 control circuits, so Class 2 conductors should be used.

For UL 2017, DVP-120C was tested with one Listed Horn/Strobe model 78-2900-0211-X where X represents lens cover color, R for red lens cover, G for green lens cover, B for blue lens cover, O for amber lens cover, C for clear lens cover.

Wire gauge	Maximum Run Length	
	(feet)	(meters)
24	200	61
22	340	103
20	480	147
18	850	215

Table 3-3 Wire gauge for Horn & Strobe functions

⚠ WARNING
Immediately exit any environment that causes an alarm condition on the sensor.

3.2.6 Interfacing Macurco Sensors

Macurco sensors with current loop outputs may be used with the DVP-120C. See www.macurco.com for information on compatible Macurco gas transducers. See specific information on other manufacturer's transducers.

www.macurco.com 1-844-325-3050 support@macurco.com 3601 N St. Paul Ave Sioux Falls, SD 57104

Power connections to Macurco sensors used with the DVP-120C are polarity-insensitive (no polarity) since a bridge rectifier is connected to the power input terminals. All sensors used with the DVP-120C panel employ screw clamp terminal blocks for power and signal connections. The polarity of the current loop connections is marked on the printed circuit board of the sensor.

The Macurco MRS-485 Adapter converts the Macurco 6-Series 4-20mA analog output to a digital output for use with the DVP-120C and other addressable network systems.

1. Remove the 4-20mA/Power plug from the Macurco 6-Series gas detector
2. Plug the MRS-485 adapter into the empty socket.
3. Install the provided MRS-485 screw.
4. See the wiring diagram for wire connection.

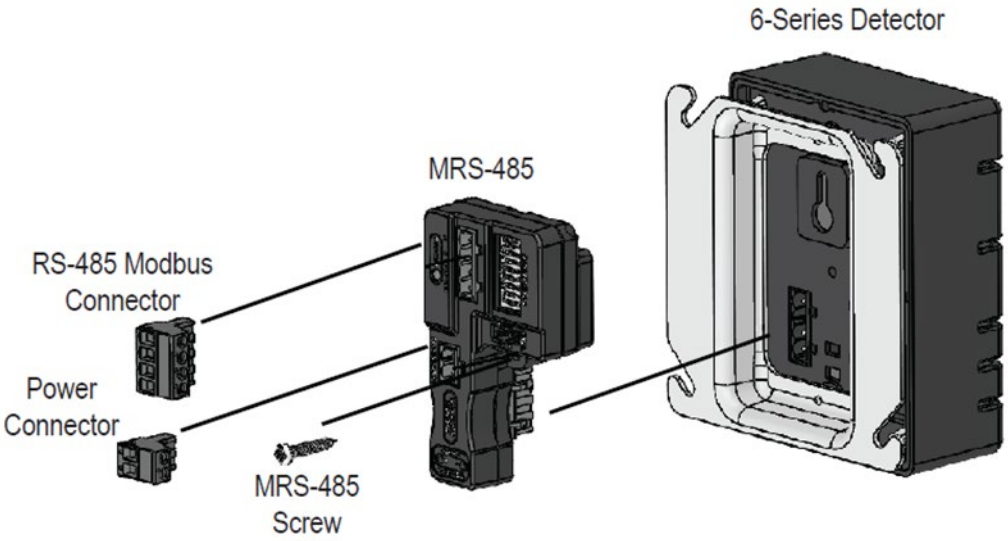

Figure 3-9 MRS-485 Installation

3.2.6.1 Connection

The Macurco MRS-485 output is connected via a four-terminal screw type connector. The MRS-485 adapter is wired in the standard 2W-Modbus circuit definition with selectable built-in terminating resistors at the ends of the RS-485 bus. The power for the MRS-485 adapter is connected via a two-terminal screw type connector, 12 to 24 VAC or 12 to 24 VDC and no polarity.

Note: Running the Modbus cable adjacent to or in the same conduit with high voltage wires is not recommended as there may be interference from the high voltages.

www.macurco.com 1-844-325-3050 support@macurco.com 3601 N St. Paul Ave Sioux Falls, SD 57104

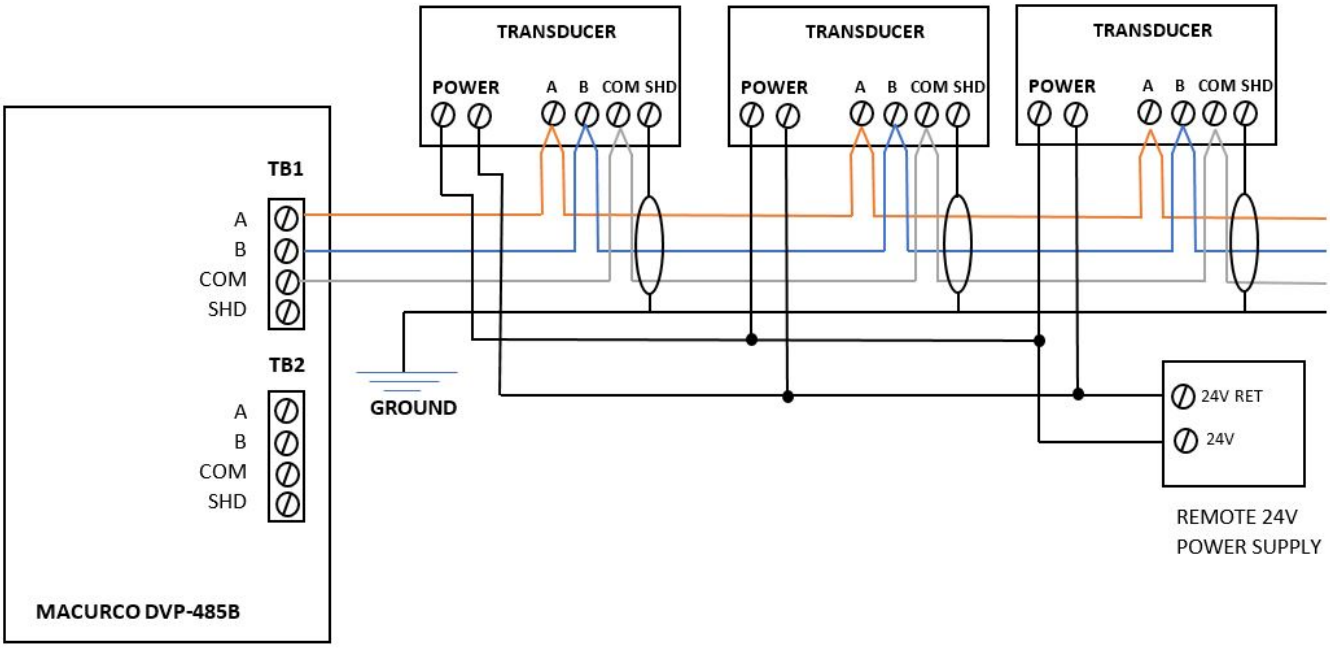

Figure 3-10 Modbus Wiring

3.2.6.2 Line Termination – End of Line Resistor

The MRS-485 and DVP-485B adapters are wired in the standard 2W-Modbus circuit definition with selectable built-in terminating resistors at the ends of the RS-485 bus. The MRS-485 and DVP-485B adapters provide integral termination for the end of line resistors (EOL). The terminations use 4-pin connector (for MRS-485) and 3-pin (for DVP-485B) with a jumper to select termination: The user selects no termination or one of the two Modbus line termination options. The MRS-485 has two-line termination options provided and DVP-485B adapters have 120-ohm termination options provided onboard.

Place the EOL jumper on one of the following positions:

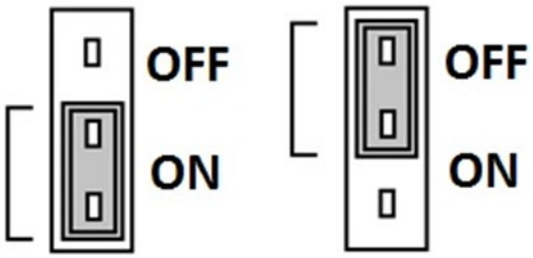

Figure 3-11 End of Line Resistor

Determining EOL Use

www.macurco.com 1-844-325-3050 support@macurco.com 3601 N St. Paul Ave Sioux Falls, SD 57104

3.2.6.3 Baud Rates

At the baud rate of 19200 (default baud rate for Macurco MRS-485 and DVP-485) and with cables less than 1,000 ft. in length, termination resistors are not recommended.

At the baud rate of 19200 and with cables longer than 1,000 ft., termination resistors are recommended.

It is recommended to use an RS-485 type of cable and 120 ohms for termination resistor.

An RS-485 network requires a 3-wire cable: a twisted pair and a third wire. It is difficult to tell whether shielding is required or not in a particular system until problems arise, so it is recommended to always use shielded cable.

When using termination resistors use only 2 resistors, one at each end of the RS-485 transmission line (i.e. 1 at the DVP-485B and 1 at the last/farthest MRS-485).

For any other baud rates calculate when (at what length) termination resistors are required. This is calculated by dividing the length L by the ratio between the new baud rate and 19200 or (x/19200) where x is the new baud rate.

$$\frac{L}{(x/19200\ baud)}$$

For example, if new baud rate is 9600

$$\frac{1000\ ft}{(9600\ baud/19200\ baud)} = \frac{1000\ ft}{0.5} = 2000\ ft$$

Use termination resistors when cables are longer than 2000 ft.

For example, if new baud rate is 38400

$$\frac{1000\ ft}{(38400\ baud/19200\ baud)} = \frac{1000\ ft}{2} = 500\ ft$$

Use termination resistors when cables are longer than 500 ft.

Note: Other manufacturers may have different recommendations on wire length and EOL resistor usage.

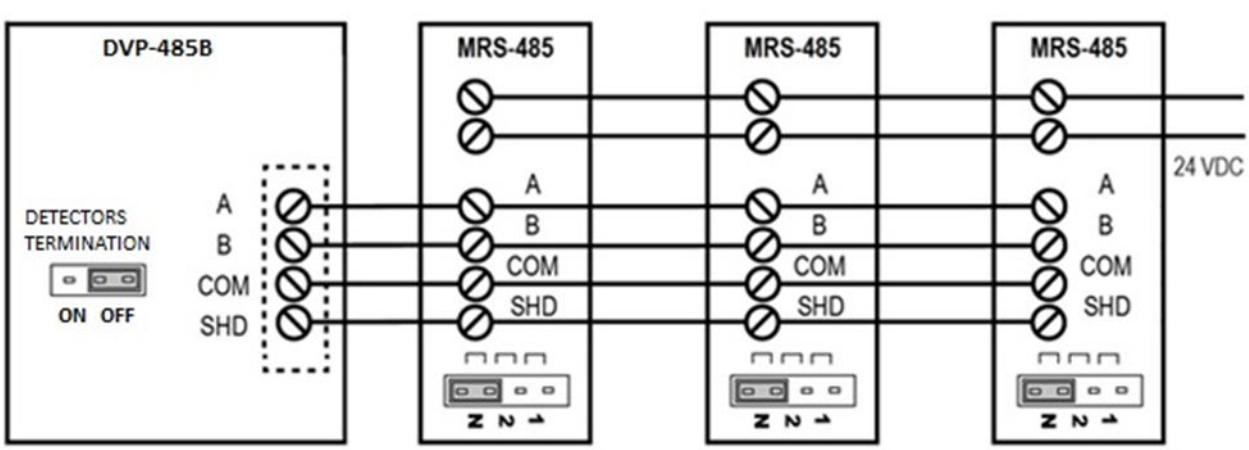

www.macurco.com 1-844-325-3050 support@macurco.com 3601 N St. Paul Ave Sioux Falls, SD 57104

Figure 3-12 EOL Placement Less than 1000 ft

At 19200 baud rate (default), 1000 ft or less and using RS-485 or Cat-5 type cable

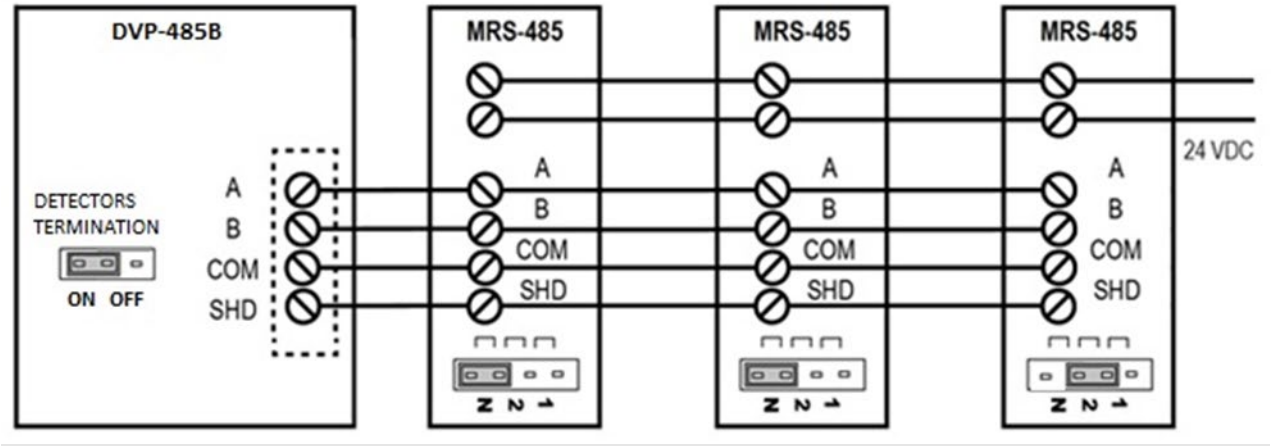

Figure 3-13 EOL Placement greater than 1000 ft

At 19200 baud rate (default), more than 1000 ft and using RS-485 type cable

3.2.6.4 Dip Switches and Addressing

Each MRS-485 (and the partner gas detector) must be configured to a unique address. If there are 10 detectors on the serial line, then 10 unique addresses must be used, one for each detector. To set the address, use the eight DIP switch positions. For each unit choose the value from 1 to 99 (see chart) and set the eight switches to match the address. UP means ON or 1 and DOWN means OFF or 0. For example, to configure a unit as address “50”, set switches “2, 5, 6” (see table) to ON or in the up position (01001100). See page 11 for a list of applicable addresses and dip-switch settings.

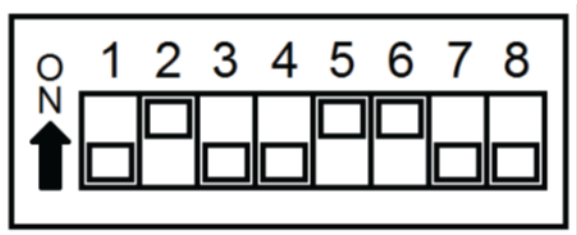

Figure 3-14 MRS-485 Dip Switch (Address “50” Shown)

1 = 1	21 = 1, 3, 5	41 = 1, 4, 6	61 = 1, 3, 4, 5, 6	83 = 1, 2, 5, 7
2 = 2	22 = 2, 3, 5	42 = 2, 4, 6	62 = 2, 3, 4, 5, 6	84 = 3, 5, 7
3 = 1,2	23 = 1, 2, 3, 5	43 = 1, 2, 4, 6	63 = 1, 2, 3, 4, 5, 6	85 = 1, 3, 5, 7
4 = 3	24 = 4, 5	44 = 3, 4, 6	64 = 7	86 = 2, 3, 5, 7
5 = 1,3	25 = 1, 4, 5	45 = 1, 3, 4, 6	65 = 1, 7	87 = 1, 2, 3, 5, 7
6 = 2,3	26 = 2, 4, 5	46 = 2, 3, 4, 6	66 = 2, 7	88 = 4, 5, 7
7 = 1,2,3	27 = 1, 2, 4, 5	47 = 1, 2, 3, 4, 6	67 = 1, 2, 7	89 = 1, 4, 5, 7
8 = 4	28 = 3, 4, 5	48 = 5, 6	68 = 3, 7	90 = 2, 4, 5, 7
9 = 1,4	29 = 1, 3, 4, 5	49 = 1, 5, 6	69 = 1, 3, 7	91 = 1, 2, 4, 5, 7

www.macurco.com 1-844-325-3050 support@macurco.com 3601 N St. Paul Ave Sioux Falls, SD 57104

10 = 2,4	30 = 2, 3, 4, 5	50 = 2, 5, 6	70 = 2, 3, 7	92 = 3, 4, 5, 7
11 = 1,2,4	31 = 1, 2, 3, 4, 5	51 = 1, 2, 5, 6	71 = 1, 2, 3, 7	93 = 1, 3, 4, 5, 7
12 = 3,4	32 = 6	52 = 3, 5, 6	72 = 4, 7	94 = 2, 3, 4, 5, 7
13 = 1, 3,4	33 = 1, 6	53 = 1, 3, 5, 6	73 = 1, 4, 7	95 = 1, 2, 3, 4, 5, 7
14 = 2, 3, 4	34 = 2, 6	54 = 2, 3, 5, 6	74 = 2, 4, 7	96 = 6, 7
15 = 1, 2, 3, 4	35 = 1, 2, 6	55 = 1, 2, 3, 5, 6	75 = 1, 2, 4, 7	97 = 1, 6, 7
16 = 5	36 = 3, 6	56 = 4, 5, 6	76 = 3, 4, 7	98 = 2, 6, 7
17 = 1, 5	37 = 1, 3, 6	57 = 1, 4, 5, 6	77 = 1, 3, 4, 7	99 = 1, 2, 6, 7
18 = 2, 5	38 = 2, 3, 6	58 = 2, 4, 5, 6	78 = 2, 3, 4, 7	
19 = 1, 2, 5	39 = 1, 2, 3, 6	59 = 1, 2, 4, 5, 6	79 = 1, 3, 4, 7	
20 = 3, 5	40 = 4, 6	60 = 3, 4, 5, 6	80 = 5, 7	

Table 3-4 Dip switch settings

3.2.6.5 Normal MRS-485 Operation

The MRS-485 will monitor the 4-20 mA current output of the detector. At power up and during its warm-up period, the 6-Series detector will communicate its sensor type over the 4-20 current output using a custom protocol. The MRS-485 will automatically register each 6-Series detector as it is programmed with information about all the detectors to which it can be connected. The MRS-485 will use this information to determine the gas level sensed by the 6-Series detector by measuring the 4-20 mA current-loop output during normal operation of the detector.

- When the LED is solid GREEN, the operation is normal, the MRS-485 knows the detector type, no errors are detected, and no MODBUS data are being received or transmitted over the RS-485 line.
- When the LED is GREEN with random bursts of AMBER, the operation is normal and now data are being received or transmitted over the RS-485 line. The AMBER LED will come on anytime that there is data traffic

www.macurco.com 1-844-325-3050 support@macurco.com 3601 N St. Paul Ave Sioux Falls, SD 57104

4 Operations

4.1 Power up

When power is first applied to the DVP-120C, a few simple self-tests will be performed, and the system will cycle through all status lights, and display the system model and firmware version number (Figure 4-1). The system will then proceed to normal mode if the operating parameters have been entered.

```
DVP-120C  V5.01.G
```

Figure 4-1 Model Display

⚠ WARNING
Each time the unit is turned on it performs a self-test, which activates the audible and visual alarms. If the self-test fails, or all the alarms do not activate, do not use and contact Technical Support at 1-844-325-3050.

4.2 Initial Operating Mode

If the user has not entered any parameters, the system WILL NOT be controlling the ventilation system. The relays WILL NOT actuate, and the horn and strobe outputs WILL NOT be powered. The power status light will show NORMAL (steady green) and the system will immediately enter the CONFIGURATION mode, see section 4.2 for details to set the configuration parameters.

If a valid set of configuration parameters have been entered, the panel will wait for all sensors to warm up. During this time, the display will show a count-down, minutes and seconds, until the end of the warm-up period, (Figure 4-2).

```
DVP-120C  V5.01.G
Warm-up   2:30
```

Figure 4-2 Warm-Up Display

During the warm-up period, the keypad will be locked. When the warm-up period ends, the LCD will start showing the normal display.

4.2.1 Status Light Display

The POWER, ALARM/WARNING, SILENCE, RELAY 1, RELAY 2 and RELAY 3 status lights indicate the system status and provide the following data:

- POWER/TROUBLE
  - Green (steady) – Power is good and there are no trouble indications
  - Yellow (steady) – Trouble is indicated by a transducer or the panel itself
- ALARM/WARNING
  - Off – All indicated gas levels are below the warning level
  - Red (steady) – One or more gas levels are at or above the alarm level
  - Amber (steady) – One or more gas levels are at or above the warning level
- HUSH

www.macurco.com 1-844-325-3050 support@macurco.com 3601 N St. Paul Ave Sioux Falls, SD 57104

  - Off –There are no silenced alarms or warnings
  - Red (flashing) –There are alarms, warnings and/or troubles that have been silenced (gas levels may or may not remain or continue to be at an alarm or warning levels)
- RELAY 1
  - Off – Relay 1 is not on
  - Green (steady) – Relay 1 is on
- RELAY 2
  - Off – Relay 2 is not on
  - Green (steady) – Relay 2 is on
- RELAY 3
  - Off – Relay 3 is not on
  - Green (steady) – Relay 3 is on

The overall system status is visible at a distance via the status lights as described above. More detailed system information is displayed on the LCD, which can show the status of each relay and sensor. A typical status display is shown in Figure 4-4.

4.3 User Interface

The LCD display is used to show detailed information about the status of the control system and the configuration parameters to the user. The keypad is used to select the information displayed and to enter the configuration parameters, which are stored in the DVP-120C memory. The keypad consists of ten-digit keys, four direction keys, plus a MENU key that is used to access the configuration menu and a HUSH key that will silence the audible alarm indicators. In normal mode, holding the zero key for three (3) seconds can be used to lock the keypad against accidental (or unauthorized) use. See Section 4.5 for details.

Figure 4-3 Keypad layout

4.3.1 Cursor Keys

In normal mode, (no warnings or alarms indicated), the up and down cursor keys will scroll the display to any configured sensors' status. In normal mode, the left and right cursor keys will scroll through the status of each of the relays. When the left (or right) key is used to scroll to another relay, the display will remove the underlining under

www.macurco.com 1-844-325-3050 support@macurco.com 3601 N St. Paul Ave Sioux Falls, SD 57104

the sensor number and underline the relay number; this indicates that the digit keys can be used to jump directly to a particular relay's status. When the up or down key is again used the display will switch back to the digit keys jumping to a particular sensor.

4.3.2 MENU Key

The MENU key has three functions.

- First, when the system is presenting the normal display, pressing the MENU key will cause the system to shift to the Configuration Menu.
- The second function of the MENU key is to return to the next-higher menu level, e.g. from the sensor configuration menu to the system menu, or from the system menu out to normal mode. If in the middle of entering a multi-digit parameter, the MENU key also cancels any changes to the parameter. When the MENU key is used to return to normal mode, any changed configuration parameters are saved in the DVP-120C's memory.
- The third function of the MENU key is to change the LCD contrast by holding the MENU key for five (5) seconds, at which point the LCD will prompt for further activities, see sections 4.4 for more detail.

4.3.3 Hush Key

The HUSH key is only used to silence the audible indicators (internal buzzer and possible external Horn and Strobe devices). Pressing and releasing the button will silence the internal buzzer. The HUSH button must be held for 3 seconds to silence the Horn and Strobe devices.

The following table shows the silence period for different state of the panel.

State of the Panel	Silence Period
Alarm	5 minutes
Occupied Failure	5 minutes
Unoccupied Failure	4 hours
Warning	15 minutes
Calibration Due Warning	Refer Table 4-2
Calibration Due Trouble	15 minutes
Trouble	8 hours
Zone Signal	15 minutes

Table 4-1 Hush function Silence Period

4.4 Normal Status Display

```
MON  10:23  R1  OFF
S01  CO        5  PPM
```

Figure 4-4 Normal System Display

The display shows the day of the week and the time of day, in 24-hour format. It also shows the status of one of the relays, R1 in this example, and the type and indicated the gas concentration of one of the configured sensors, S01 is a CO sensor indicating 5ppm in this example.

Note: The "S" will alternate between "S" (capital) and "s" (lowercase), this indicates that the sensor is communicating with the DVP-120C

www.macurco.com 1-844-325-3050 support@macurco.com 3601 N St. Paul Ave Sioux Falls, SD 57104

Notice in Figure 4-4 that the digits 0 1 are underlined; this indicates that the digit keys can be used to jump directly to another sensor's status. When the first digit is pressed, the display will prompt for the second digit of the target sensor.

```
Show  Sensor  _1
```

Figure 4-5 Sensor Prompt

In this example, the first digit entered was 1. Since the DVP-120C can handle 99 sensors, the sensor number must be entered in a two-digit format. For single digit number (1-9) the first digit entered would be 0 (zero). When the second digit is entered, the normal display will be restored; showing the type and value of the selected sensor.

As mentioned above, the left and right scroll keys will display the next or previous relay's status. The display will also change the underline to indicate that the digit keys (zero, one and two) can be used to jump directly to a particular relay. Since only one digit is needed to select a relay, the system does it immediately rather than prompting to show the relay.

If the sensor is indicating a gas level that is greater than the alarm or warning levels, the gas reading will alternate with the words ALARM or WARNING as appropriate. If a sensor fails, a connection is lost or the panel itself detects a failure of its own, the panel will enter TROUBLE mode and the gas reading will be replaced by the word TROUBLE (the TROUBLE status condition is discussed in section 4.7 Trouble Status Display).

4.5 ALARM Status Display

When any sensor indicates a gas level that is at or above the configured alarm level for the sensor, the panel will enter ALARM mode, during which the internal buzzer will sound, the alarm lamp will be red and the LCD will show the sensor type and channel number.

```
ALARM
CO  SENSOR  02
```

Figure 4-6 Alarm Display

The display will cycle through all sensors that are signaling alarm levels, at five seconds per display. Pressing any key (except HUSH) will advance the display to the next sensor that is signaling an alarm level.

⚠ WARNING
Do not cover or obstruct audible alarm opening or visual alarm LED. Doing so may adversely affect product performance.

If an external horn and/or strobe are connected and configured to signal an alarm condition, they will also sound when an alarm condition occurs, after a delay if that configuration option is used.

When the HUSH key is pressed, the internal buzzer will be silenced for five (5) minutes. If the horn or strobe turn on delays have not finished, then they will also be silenced. If the delays have finished the HUSH key must be held for three (3) seconds in order to silence the horn and strobe.

www.macurco.com 1-844-325-3050 support@macurco.com 3601 N St. Paul Ave Sioux Falls, SD 57104

When all indicators have been silenced, the display will show that alarms have been silenced for five minutes. After any key is pressed (or five seconds), the display will return to normal mode.

```
ALARM SILENCED
FOR 5 MINUTES
```

Figure 4-7 Alarm Silenced message

If Relay 1 is configured as an ALARM relay, it will be turned on when an alarm condition is recognized.

4.6 Warning Status Display

When any sensor indicates a gas level that is at or above the configured warning level for the sensor, the panel will enter WARNING mode during which the internal buzzer will sound, the alarm/warning lamp will be amber, and the LCD will show the sensor type and channel number.

```
WARNING
CO SENSOR 02
```

Figure 4-8 Warning display

The display will cycle through all sensors that are signaling warning levels, at five seconds per display. Pressing any key (except HUSH) will advance the display to the next sensor that is signaling a warning level.

If the buzzer and/or an external horn and/or external strobe are connected and configured to signal a warning condition, they will also sound when a warning condition occurs. There is a configurable delay before the horn or strobe will sound, see sections 4.13.5 Configure Horn Submenu, 4.13.6 Configure Strobe Submenu, and 4.13.4 Configure Relays, Horn & Strobe.

When the HUSH key is pressed, the internal buzzer will be silenced for fifteen (15) minutes. If the horn or strobe turn on delays have not finished, then they will also be silenced. If the delays have finished, the HUSH key must be held for three (3) seconds in order to silence the horn and strobe.

When all indicators have been silenced, the display will show that warnings have been silenced for fifteen minutes. After any key is pressed (or five seconds) the display will return to normal mode.

```
WARNING SILENCED
FOR 15 MINUTES
```

Figure 4-9 Warning Silenced message

4.7 Trouble Status Display

If a sensor fails, a connection is lost or the panel itself detects a failure of its own, the panel will enter TROUBLE mode during which the internal buzzer will sound, the power lamp will be yellow, and the LCD will display the specific sensor identified.

Possible trouble conditions are:

- Any configured channel has less than 4 mA flowing in the current loop
- A sensor is reporting a trouble condition

www.macurco.com 1-844-325-3050 support@macurco.com 3601 N St. Paul Ave Sioux Falls, SD 57104

- Any configured channel wiring is open or shorted.
- Internal controller board problems are detected.

```
Trouble
 CO Sensor 02
```

Figure 4-10 Trouble display

The display will cycle through all trouble indications, at five seconds per display. Pressing any key (except HUSH) will advance the display to the next trouble indicator.

If an external horn and/or strobe are connected and configured to signal a trouble condition, they will also sound when a trouble condition occurs, after a delay, if that configuration option is selected.

When the HUSH key is pressed, the internal buzzer will be silenced for eight (8) hours. If the horn or strobe turn on delays have not finished, then they will also be silenced. If the delays have finished, the HUSH key must be held for three (3) seconds in order to silence the horn and strobe.

When all indicators have been silenced, the display will show that trouble indications have been silenced for eight hours. After any key is pressed (or five seconds), the display will return to normal mode.

```
TROUBLE SILENCED
FOR 8 HOURS
```

Figure 4-11 Trouble Silenced message

4.8 Unoccupied Failure Display

During unoccupied time, DVP-120C compares the readings of all CM-6 and TX-6-ND detectors connected (irrespective of assigned zones), and if any detector is more than 15ppm (for CM-6) or 1.5ppm (for TX-6-ND) above or below the average of all detectors (of same type) for longer than 4 hours, the detector has failed. This failure is referred to as Unoccupied failure in rest of the manual. (Refer to "Section 4.13.2.6 Configure Occupied Time" for process to define occupied time. Time outside the defined occupied time are unoccupied time.)

DVP-120C displays following message for unoccupied failure. If more than one detector fails for unoccupied time, then display scrolls every 5 seconds period to show all failed detectors.

```
Sen. Failed Unoc
CO Sensor 02
```

Figure 4-12 Unoccupied Sensor Failed

Unoccupied failure triggers alarm condition in the panel. Hence Alarm/Warning LED will be red. Buzzer, Horn and Strobe will be energized based on Alarm Signal Configuration in configure signal menu, see section 4.13.8 Configure Signals Submenu menu. Alarm due unoccupied failure have lower priority than gas alarm.

If unoccupied failure detector is part of a zone, then relays assigned to the zone gets activated.

When the HUSH key is pressed, the internal buzzer will be silenced for 4 hours. If the horn or strobe turn on delays have not finished, then they will also be silenced. If the delays have finished, the HUSH key must be held for three (3) seconds in order to silence the horn and strobe.

www.macurco.com 1-844-325-3050 support@macurco.com 3601 N St. Paul Ave Sioux Falls, SD 57104

When all indicators have been silenced, the display will show that unoccupied failure indications have been silenced for four hours. After approximately 5 seconds the display will return to normal mode.

```
FailedU  Silenced
For  4  hours
```

Figure 4-13 Unoccupied Failure Silenced

In normal mode, detectors with unoccupied failure silenced will display “Failed U” alternating with current gas reading.

4.9 Occupied Failure Display

During occupied time, system compares the readings of the CM-6 and TX-6-ND detectors assigned to a zone. If the 30 minutes rolling average for any sensor in a zone is more than 15ppm (for CM-6) or 1.5ppm (for TX-6-ND) above or below the 30-minute rolling average for other detector(s) (of same type) in the same zone, the detector has failed. This failure is referred to as occupied failure in rest of the manual. (Refer to “Section 4.13.2.5 Configure Occupied Time” for process to define occupied time.)

DVP-120C displays following message for occupied failure. If more than one detector fails for occupied time, then display scrolls every 5 seconds period to show all failed detectors.

```
Sen.  Failed  Occ.
CO  Sensor  02
```

Figure 4-14 Occupied Sensor Failure

Occupied failure triggers alarm condition in the panel. Hence Alarm/Warning LED will be red. Buzzer, Horn and Strobe will be energized based on Alarm Signal Configuration in CONFIGURE SIGNAL menu. Alarm due occupied failure have lower priority than gas alarm.

If occupied failure detector is part of a zone, then relays assigned to the zone gets activated.

When the HUSH key is pressed, the internal buzzer will be silenced for 5 minutes. If the horn or strobe turn on delays have not finished, then they will also be silenced. If the delays have finished, the HUSH key must be held for three (3) seconds in order to silence the horn and strobe.

When all indicators have been silenced, the display will show that occupied failure indications have been silenced for 5 minutes. After approximately 5 seconds the display will return to normal mode.

```
FailedO  Silenced
For  5  minutes
```

Figure 4-15 Occupied Failure Silenced

In normal mode, detectors with occupied failure silenced will display “Failed O” alternating with current gas reading.

4.10 Calibration Due Warning Display

When there are up to 30 days until calibration for any detectors connected, panel will trigger Calibration Due Warning. Calibration Due Warning has lower priority than gas warning. This feature is applicable only for detector with calibration period feature.

www.macurco.com 1-844-325-3050 support@macurco.com 3601 N St. Paul Ave Sioux Falls, SD 57104

DVP-120C displays the address of the detector with calibration due warning. If there are more than one detector with calibration due warning, then display scrolls every 5 seconds to display all detectors with calibration due warning.

```
Calibration Due
CO Sensor 02
```

Figure 4-16 Calibration Due

During Calibration Due Warning, the warning LED will be ON. Buzzer, Horn and Strobe of the panel will be activated based on Warning Signal Configuration in CONFIGURE SIGNAL.

When the HUSH key is pressed, the internal buzzer will be silenced. If the horn or strobe turn on delays have not finished, then they will also be silenced. If the delays have finished, the HUSH key must be held for three (3) seconds in order to silence the horn and strobe. Silence period is dependent on time left to calibration. Following table shows silence period for different time to calibration.

Time till Calibration	Silence Period
>14 days, and <30 days	14 days
>7 days, and <14 days	7 days
< 7 days	1 day

Table 4-2 Calibration Due Silence Period

When all indicators have been silenced, the display will show that calibration due warning indication have been silenced for corresponding silence period. After approximately 5 seconds the display will return to normal mode. Only a calibration due warning with lower silence interval (refer Table 4-2) will reset the HUSH and panel will go back to state indicating Calibration Due Warning.

```
Cal. Due SILENCED
FOR 7days
```

Figure 4-17 Calibration Due Silenced

When in normal mode, for detectors with Calibration Due Warning silenced panel will display current gas reading alternating with “Cal. Due” every second.

4.11 Calibration Overdue Trouble Display

When the panel detects a detector with Calibration Overdue condition it will go into trouble state. This trouble has higher priority than a regular trouble condition. This feature is applicable only for detector with calibration period feature.DVP-120C displays the address of the detector with calibration Overdue trouble. If there are more than one detector with calibration overdue condition, then display scrolls every 5 seconds to display all detectors with this trouble condition.

```
Calibration Req.
CO Sensor 02
```

Figure 4-18 Calibration Required

During Calibration Overdue trouble, the trouble LED will be ON. Buzzer, Horn and Strobe of the panel will be activated based on Trouble Signal Configuration in CONFIGURE SIGNAL.

www.macurco.com 1-844-325-3050 support@macurco.com 3601 N St. Paul Ave Sioux Falls, SD 57104

When the HUSH key is pressed, the internal buzzer will be silenced for 15 minutes. If the horn or strobe turn on delays have not finished, then they will also be silenced. If the delays have finished, the HUSH key must be held for three (3) seconds in order to silence the horn and strobe.

When all indicators have been silenced, the display will show that calibration due warning indication have been silenced for 15 minutes. After approximately 5 seconds the display will return to normal mode.

```
Cal.Req  SILENCED
FOR  15  Minutes
```

Figure 4-19 Calibration Required Silenced

When in normal mode, for detectors with Calibration Overdue silenced, panel will display “Cal.Req” instead of gas reading.

4.12 Ventilation Control

The ventilation control function operates independently from the alarm function. It provides the ability to configure the DVP-120C for control of one to three zones. Each zone can respond to gas levels indicated by one or more of the sensors, with configurable turn on and turn off concentrations (rising and falling) for each gas type. Each zone can also be controlled based on the time of day.

Each zone can be configured to control one, two or all three of the relays and the external horn and strobe if desired. When more than one zone is controlling a relay it only takes one zone to activate the relay, but all controlling zones must release the relay before it will turn off.

Each of the relays, horn, and strobe has independent turn-on delays (to ignore short duration, transient gas signals) and turn off delays (to ensure minimum run times for fans that must run for internal cooling).

A VFD may be enabled and controlled by the DVP-120C output relays. This allows an operator to change fixed speeds for a VFD if it's used as a stand-alone control.

For example, an application where VFD is controlling the speed of a fan. An operator can close relay 1, 2, or 3 to set the fan speed. If relay 1 is closed, the VFD will operate at 50%, If relay 2 is closed, the VFD will operate 75%, If relay 3 is closed, the VFD will operate at 100%.

4.12.1 Zone Signal Display

When a zone is controlling the horn or strobe and they are activated, the panel will enter ZONE SIGNAL mode during which the horn and/or strobe will be turned on and the LCD will show the zone that is signaling.

```
ZONE  SIGNAL
ZONE  1
```


www.macurco.com 1-844-325-3050 support@macurco.com 3601 N St. Paul Ave Sioux Falls, SD 57104

Figure 4-20 Zone Signal Display

The display will cycle through all zones that are controlling the horn or strobe and are signaling, at five seconds per display. Pressing any key (except HUSH) will advance the display to the next zone that is signaling.

When the HUSH key is held for three (3) seconds, the horn and/or strobe will be silenced for fifteen (15) minutes. When silenced, the display will show that zone signals have been silenced for fifteen minutes. After any key is pressed (or five seconds) the display will return to normal mode.

```
ZONE  SILENCED
FOR  15  MINUTES
```

Figure 4-21 Zone Signal Silenced

4.13 System Configuration

The configuration menus can be entered from normal mode by pressing the MENU key. While in configuration mode, the user can review all configuration parameters to check the current operating conditions. As an aid when configuring the control panel, the first entry in the top menu summarizes the number of sensors and relays that the panel is currently recognizing. Be sure that the 4-20mA output on each sensor is set to “On”.

```
5  SENSORS  FOUND
3  RELAYS  FOUND
```

Figure 4-22 Hardware Summary

The MENU key is also used to return to a higher-level menu and finally exit the configuration menus back to normal mode. When exiting from the menu system to normal mode, if any configuration changes have been made, the panel will ask whether changes are to be saved.

```
Save  Config.?
(0=NO, 1=YES)
```

Figure 4-23 Save Configuration? Prompt

Pressing the zero (0) key at this point will cancel all changes except time and day of week. Pressing the one (1) will save all changes to memory, and the changes will then become effective in controlling the ventilation system.

While the DVP-120 is in the configuration mode, alarm and ventilation control functions continue in the background with the previously set configuration values. If an alarm condition is detected, the alarm lamp, the buzzer, the horn and the strobe will operate as configured but the LCD will not display the detailed information. The HUSH key can be used to silence any alarm, warning or trouble indicators without having to exit the configuration mode. If the MENU key is used to exit the configuration mode before using the HUSH key, the LCD will display the cause of the audible indicator.

The numeric keys are used to change the parameter displayed. The underlined character, or space, on each display, indicates what will be changed by the digit keys.

The left and right cursor keys will enter the submenu and scroll through the items of the same type where appropriate, e.g. enter the Configure Sensors submenu and scroll through the parameter lists for the existing sensors.

www.macurco.com 1-844-325-3050 support@macurco.com 3601 N St. Paul Ave Sioux Falls, SD 57104

The up cursor key scrolls through the menu entries in the order listed here, while the down cursor key scrolls in the reverse order.

Changing the configuration parameters requires the entry of a password before changes can be made. The default password is 1234. See Figure 4-46 Enter Password for an example of the password prompt.

In many cases, the parameter is entered as a string of digits, but some parameters are selected by pressing a single key, e.g. pressing 1 selects Monday, 2 selects Tuesday, etc.

4.13.1 System Menu

The top menu level allows the user to select:

- Configure System
- Configure Sensors
- Configure Relays, Horn & Strobe
- Configure Zones
- Configure Signals

The up and down cursor keys can be used to scroll through the entries in the list, while the left or right key will enter the submenu.

The MENU key will return to normal mode. If any configuration parameters have been changed, the panel will prompt to save the changes. If the changes are saved, this is the point at which they become effective in controlling the ventilation system and for alarm level detection. Note that changes to the time and day of week are not considered configuration items; they are saved as soon as they are entered.

4.13.2 Configure System Submenu

The system configuration submenu provides entries to:

- Set the time of day, 24-hour format
- Set the day of the week, day 1 is Monday
- Load Default Configuration
- Change Password
- Configure Sensor Type
- Configure Modbus
- Configure Occupied Periods

4.13.2.1 Set Time of Day

```
Time:  22:55
Day:Tuesday
```

Figure 4-24 Set Time of Day

This display example shows that the time is 22:55 (10:55 PM). The underlined characters indicate that the numeric keys can be used to set the current time of day. When the first digit is entered (and after the password is entered if required), the display will change to show that the “hour” portion of the time is currently being entered.

```
Time:  01:55
```


www.macurco.com 1-844-325-3050 support@macurco.com 3601 N St. Paul Ave Sioux Falls, SD 57104

```
Day:Tuesday
```

Figure 4-25 Enter Hours

In this example, the first digit entered was 1 (one), and the panel is waiting for the second digit of the hour to be entered. If the second digit is not entered within five seconds, the time will revert to the previous value. After the second digit of the hour is entered, the display will prompt for the “minute” entry

```
Time:  16:55
Day:Tuesday
```

Figure 4-26 Enter Minutes

In this example, the hour (16) has been accepted and the panel is waiting for the minute to be entered. If no digits are entered within 5 seconds, the entry will be finished without changing the minute; however, the hour will be changed to the value entered.

Note that the time is saved as soon as the fourth digit is entered.

4.13.2.2 Set Day of Week

```
Time:  22:55
Day:2  Tuesday
```

Figure 4-27 Set Day of the Week

This display example shows that Tuesday is the current day of the week. The underline character indicates that the day can be changed by entering the corresponding digit:

- 1 Monday
- 2 Tuesday
- 3 Wednesday
- 4 Thursday
- 5 Friday
- 6 Saturday
- 7 Sunday

Note that the day of the week is saved as soon as the digit is entered.

4.13.2.3 Load Default Configuration

```
1  Load Default
   Configuration
```

Figure 4-28 Load Default Configuration

When the number one (1) digit is pressed, the panel will prompt for the password, even if it has been entered previously. If the password is entered correctly, the panel will overwrite the existing configuration with the default configuration. This operation is intended to restore the panel to a known basic condition if it is removed from one installation and installed in another.

Default Configuration

1	Password	1234

www.macurco.com 1-844-325-3050 support@macurco.com 3601 N St. Paul Ave Sioux Falls, SD 57104

2	Sensors	Undefined
3	Alarm signals	Buzzer = Intermittent, Horn = Intermittent, Strobe = Continuous
4	Warning signals	Buzzer = Off, Horn = Off, Strobe = Off
5	Trouble signals	Buzzer = Triple Tap, Horn = Off, Strobe = Off
6	Relay 1	Normally off, 1-minute turn on delay, 1 minute minimum on time
7	Relay 2	Normally off, 1-minute turn on delay, 1 minute minimum on time
8	Relay 3	Normally off, 1-minute turn on delay, 1 minute minimum on time
9	Horn	Normally off, 1-minute turn on delay, 0 (zero) minimum on time
10	Strobe	Normally off, 1-minute turn on delay, 0 (zero) minimum on time
11	Zone 1	Controls R1
12	Zone 2	Controls R2
13	Zone 3	Controls R3
14	Group 1 in each zone	Type 1 CO, Voting mode, Quorum = 1
15	Group 2 in each zone	Type 2 NO2, Voting mode, Quorum = 1

Description	Carbon Monoxide	Nitrogen Dioxide
Type	CO	NO_2
Range	200ppm	20ppm
Alarm Level	200ppm	5ppm
Warning Level	100ppm	3ppm
Rising Level	35ppm	2.5ppm
Falling Level	15ppm	1.2ppm

Table 4-3 Default Configuration Settings

4.13.2.4 Change Password

```
Change Password
          * * * *
```

Figure 4-29 Change Password

When the first digit is entered to change the password, the panel will prompt for the existing password to be entered (if it hasn't already been entered), see section 4.13.2.8 Enter Password for more detail. Once the current password has been entered, the panel will prompt for the new password.

4.13.2.5 Configure Modbus

```
Baud Rate:
0- 19200 Bd
```


www.macurco.com 1-844-325-3050 support@macurco.com 3601 N St. Paul Ave Sioux Falls, SD 57104

Figure 4-30

You can change the baud rate for communication with detector with this menu. Default baud rate is 19200. The underlined character indicate that the numeric keys can be used to change the baud rate. Valid entries are 0, 1 and 2 corresponding to baud rate of 19200, 9600 and 4800 respectively.

```
Inter--frame  add
delay: 0 1  msec
```

Figure 4-31

This is a delay added between frame for communication between detectors and panel. It is recommended to leave this to the default value of 01 msec.

```
Reading  Retries:
                 1 2
```

Figure 4-32

This parameter is number of times panel will attempt to receive readings from panel before going into trouble state. The underlined characters indicate that the numeric keys can be used to change the value.

NOTE: Change the value of Reading Retries according to table below, every time the baud rate for the panel is changed.

Baud Rate	Reading Retries
19200 (Default)	12 (Default)
9600	8
4800	5

Table 4-4

```
Can  Discover: 99
Enabled :9 9
```

Figure 4-33

This menu option is useful for troubleshooting. Normally all sensors register automatically. This shows how many detectors the panel can discover and how many of them are enabled. You can enable or disable any specific detector address entering this menu. If any of the detector address is disabled, then the panel will not attempt communication with the corresponding detector.

```
Found  06  of  99
Enabled :9 9
```

Figure 4-33

This menu shows how many detectors have been registered. In this example, the display example shows that panel has discovered 6 detectors out of maximum possibility of 99. This means 93 more detectors can be connected to the panel.

www.macurco.com 1-844-325-3050 support@macurco.com 3601 N St. Paul Ave Sioux Falls, SD 57104

4.13.2.6 Configure Occupied Time

DVP-120C monitors the readings of Macurco CM-6 detectors connected to the panel and compares the readings of detectors to detect occupied failure and unoccupied failure. Refer to Section 4.8 Unoccupied Failure Display and 4.9 Occupied Failure Display for details on these failures.

"Configure Occupied Period" is used to define occupied time for DVP-120C. Up to 2 occupied period can be defined for each week day and weekend. Any time period outside defined occupied time period is unoccupied time period.

By default, all times are unoccupied times.

Press Left or Right key to enter the "Configure Occupied Period" menu and use UP or DOWN key to scroll through sub-menu of Configure Occupied Time menu. Before one can make any changes to these settings panel will prompt to enter the current password.

Weekday/Weekend Number Active Period

In this sub-menu of Configure Occupied Time, you can define how many occupied periods you want to define for weekday and weekend. Valid entries are 0,1 and 2. Default value of 0 corresponds to disabled occupied period.

```
Weekday number
active period:0
```

```
Weekend number
active period:0
```

Figure 4-34 Active Period Weekday

Press LEFT key to go back to previous menu i.e. 'Configure Occupied Time'. Press RIGHT key to enter this configuration menu and access Weekday/Weekend Period sub-menu.

Weekday/Weekend Period

This configuration menu is available only if active period for weekday or weekend is 1 or 2.

```
Weekend period:1
07:00 to 07:00
```

```
Weekday period:1
07:00 to 08:00
```

Figure 4-35 Active Period Weekend

Default Weekdays occupied times are 07:00 to 08:00 (Period 1) and 15:00 to 16:00 (Period 2). Default Weekends occupied times are 07:00 to 07:00 (Period 1) and 15:00 to 15:00 (Period 2).

If active period entered was 2, press UP or DOWN key to scroll between Period 1 and Period 2. Press LEFT key to return to previous menu. Press RIGHT key to enter this configuration and enter Start and End time for corresponding period.

www.macurco.com 1-844-325-3050 support@macurco.com 3601 N St. Paul Ave Sioux Falls, SD 57104

Start/End Time

At this point, you will define start and end time for occupied period during weekend or weekday. Values entered for Start and End time are in 24-hour format. If value entered for Weekday/Weekend active period is 2, you need to enter Start Time and End Time for 2 periods separately. Notice the following figure specify on the first line that Start Time and End Time corresponds to Week Day Period 1. This means time period of 7 AM to 8AM is regarded as occupied time for DVP-120C during weekdays.

```
Weekday period: 1
Start Time: 07:00
```

```
Weekday period: 1
End Time:   08:00
```

Figure 4-36 Occupied Time Period

Press UP and DOWN key to scroll between Start Time and End Time. To enter the time, scroll to corresponding screen i.e. Start Time or End Time, and start entering value via keypad. First two entered digits are hours and next two pressed digits are minutes. To enter single digit hour, enter 0 as first digits. E.g. for 8:30 AM, enter 08 and then 30.

Press LEFT key to go back to previous menu.

4.13.2.7 Configure sensor Type

Sensor Registration

Sensor registration is continuously monitored by the DVP-120. When the currently selected sensor type agrees with the stored registration information the DVP-120 will remain in normal mode. When new registration information is detected by the DVP-120, for example, if a different gas type of Macurco sensor was installed, the following message is displayed: “Configuration Changed Any key to save” is displayed.

```
Config.     changed
Any  Key  to  save
```

Figure 4-37 Configuration Changed

Pressing any key will prompt the user to enter the password. Once the valid password is entered the new sensor type is saved. The program does not allow any other activity unless a valid password is entered.

If the DVP-120 is in configuration mode (user is changing the configuration) the registration information is saved in the background and the message indicating that configuration was changed is delayed until the user goes back to normal mode.

Customer Sensor Implementation

NOTE: Although these options are viewable on the panel, the menu is read only. The DVP-120C does not support the addition of wildcard sensors.

```
Configure     sensor
```


www.macurco.com 1-844-325-3050 support@macurco.com 3601 N St. Paul Ave Sioux Falls, SD 57104

```
type
```

Figure 4-38 Configure Sensor Type

From this menu, you can access any of the following menus to view type parameters using the navigation key up, down, left and right. This menu is read only i.e. changes cannot be made.

```
Type: 01          CO
   Good definition
```

Figure 4-39 Sensor Definition

CO for carbon monoxide is one of the 2 Macurco sensor types already defined

```
Type:      01
Tag:   CO        ♦
```

Figure 4-40 Sensor Tag

"Tag" is a 3-character parameter and is used to identify the sensor type (i.e. CO, NO_2...)

```
Type: 01          CO
Units:      ppm   ♦
```

Figure 4-41 Sensor Units

"Units" is a 4-character parameter and indicates the engineering units (i.e. ppm)

```
Type: 01          CO
Depletion:  0     No
```

Figure 4-42 Depletion Type

"Depletion" is "1" when the sensor is a depletion type and "0" when it is not a depletion type sensor. A depletion sensor detects when gas concentrations in a space fall below a specified level.

```
Type: 01          CO
Dec.: 0     8888.  ppm
```

Figure 4-43 Decimal Points

"Dec." defines how many decimal points are used to display the reading, alarm, warning, range, rising and falling levels. It can have values between 0 and 2.

```
Type: 01          CO
Res.:          1 ppm
```


www.macurco.com 1-844-325-3050 support@macurco.com 3601 N St. Paul Ave Sioux Falls, SD 57104

Figure 4-44 Resolution

“Res.” Defines the resolution used to display the reading, alarm, warning, range, falling level and rising level. It can have values between 1 and 500 when “Dec.” is 0, 50.0 when “Dec.” is 1 and 5.00 when “Dec.” is 2.

```
Type: 01          CO
Range:      200  ppm
```

Figure 4-45 Sensor Range

“Range” is the value displayed when current measured is 20mA.

```
Type: 01          CO
Alarm:      200  ppm
```

Figure 4-46 Alarm Level

“Alarm” is the default alarm range.

```
Type: 01          CO
Warn:       100  ppm
```

Figure 4-47 Warning Level

“Warn” is the default warning range.

```
Type: 01          CO
Rise:        35  ppm
```

Figure 4-48 Rising Trip Point

“Rise” is the default rising level used in Zone configuration.

```
Type: 01          CO
Fall:        15  ppm
```

Figure 4-49 Falling Trip Point

“Fall” is the default falling level used in Zone configuration.

4.13.2.8 Enter Password

If the password has not yet been entered, when the first digit of any parameter is entered, the panel will prompt for the current password. Note that the first digit entered is discarded; it does not count toward the password or toward the parameter entry.

```
Enter Password
_ _ _ _
```

Figure 4-50 Enter Password

When the first digit is entered, the panel will show

```
Enter Password
        *
_ _ _ _
```


www.macurco.com 1-844-325-3050 support@macurco.com 3601 N St. Paul Ave Sioux Falls, SD 57104

Figure 4-51 Password Prompt

If the password is not entered correctly the panel will display

```
Wrong Password
```

Figure 4-52 Wrong Password Prompt

Once the current password has been entered, the panel will prompt for the configuration parameter being changed.

If the password has been lost:

- Power down the DVP-120C.
- Remove the Jumper Shorting Connector from the EXT header and place the Jumper Shorting Connector onto the top two pins of the SYS header.
- Power up the DVP-120C. The first display is the current password on the unit.
- Remove the Jumper Shorting Connector from the SYS header and install back onto the two bottom pins of the EXT header.

⚠ WARNING

Use only for monitoring the gases which the sensors and equipment are designed to detect. Failure to do so may result in exposures to gases not detectable and result in serious injury or death. For proper use, see supervisor or User manual, or Contact Technical Support at 1-844-325-3050.

4.13.3 Configure Sensors Submenu

There is a list of parameters for each sensor in the system, either currently wired or configured but presently disconnected. The left and right cursor keys can be used to move from one sensor to another and the up and down keys will scroll through the parameters for the particular sensor.

4.13.3.1 Sensor Summary

```
Sensor 01      CO
A: 200   W:   50
```

Figure 4-53 Sensor Summary

This display example shows that the sensor on channel 01 has been configured as a Carbon Monoxide sensor with an Alarm level of 200ppm and a Warning level of 50ppm.

Notice that the sensor number, 01 in this example, is underlined. This indicates that the digit keys can be used to jump to a particular channel, even if there is no sensor connected to the channel.

4.13.3.2 Sensor Type

```
Sensor 01      CO
Type: 1
```


www.macurco.com 1-844-325-3050 support@macurco.com 3601 N St. Paul Ave Sioux Falls, SD 57104

Figure 4-54 Sensor Summary

This display example shows that the sensor on channel 01 has been configured as a Carbon Monoxide Sensor. The valid entries for Macurco type sensors are Carbon Monoxide (CO), and Nitrogen Dioxide (NO_2).

Setting the sensor type to 0 (zero) will cause the display to ask if the user wants to DELETE the sensor. If the answer is yes, the configuration record for this sensor channel will be deleted and the channel will no longer be used to control the ventilation system. When a sensor's type is changed, the alarm level, warning level, and range will be set to the default for the sensor type.

The following three parameters are not accessible until a sensor type of 1, or 2 is selected.

4.13.3.3 Alarm Set Point

```
Sensor 01      CO
Alarm:       200ppm
```

Figure 4-55 Sensor Alarm Level

The default alarm levels for the sensors are:

Description	Carbon Monoxide	Nitrogen Dioxide
Alarm Level	200ppm	5ppm

Table 4-5 Default Alarm levels

Setting an alarm level of 0 (zero) will disable alarm detection for this sensor.

4.13.3.4 Warning Set Point

```
Sensor 01      CO
Warning:      _50ppm
```

Figure 4-56 Sensor Warning Level

The default warning levels for the sensors are:

Description	Carbon Monoxide	Nitrogen Dioxide
Warning Level	100 ppm	3 ppm

Table 4-6 Default warning levels

Setting a warning level of 0 (zero) will disable warning detection for this particular sensor.

4.13.3.5 Range

```
Sensor 01      CO
Range:       200ppm
```

Figure 4-57 Sensor Range

The range for each sensor is the gas concentration that corresponds to the 20-mA signal level.

www.macurco.com 1-844-325-3050 support@macurco.com 3601 N St. Paul Ave Sioux Falls, SD 57104

The default range values for the sensor are:

Description	Carbon Monoxide	Nitrogen Dioxide
Rang	200 ppm	20 ppm

Table 4-7 Default Range

4.13.4 Configure Relays, Horn & Strobe Submenu

There is a list of parameters for each relay in the system. The left and right cursor keys can be used to move from one relay, horn or strobe to another and the up and down keys will scroll through the parameters for the particular relay, horn or strobe.

4.13.4.1 Relay Summary

```
Relay 1 Norm.Off
Delay On,Min.On
```

Figure 4-58 Relay Summary

This display example shows that Relay 1 is configured to operate Normally Off, with a turn-on delay and a minimum on time.

Notice that the relay number, 1 in this example, is underlined. This indicates that the digit keys can be used to jump to a particular relay, horn or strobe. The relays are numbers 1, 2 and 3; the horn is number 4 and the strobe is 5.

4.13.4.2 Relay Mode

```
Relay 1 Norm.Off
Mode:2
```

Figure 4-59 Relay Mode

This display example shows that relay 1 is configured to operate in the Normally Off mode. The relay modes are:

- 1 ALARM
- 2 Normally Off (default)
- 3 Normally On

Relay mode 1 is a special case. This mode is only available on relay 1 and dedicates the relay to function as an alarm signal to a subsequent alarm or monitoring panel. This mode forces the relay to Normally Off mode with no turn on delay or minimum on time. See Section 4.5 ALARM Status Display for more detail regarding alarms.

Fail Safe operation can be implemented by configuring a relay to operate Normally On, and wiring the circuit using the NC (normally closed) contact. In this way, if the control panel loses power the relay will turn on the controlled device if it still has power.

4.13.4.3 Relay Turn on Delay

```
Relay 1 Delay On
(mm:ss) 01:00
```


www.macurco.com 1-844-325-3050 support@macurco.com 3601 N St. Paul Ave Sioux Falls, SD 57104

Figure 4-60 Delay time

The default turn-on delay is one minute, and the maximum allowed value is fifteen minutes. The value is entered in two groups, 2 digits for the minutes and then 2 digits for the seconds. A leading zero must be entered for each group if applicable.

4.13.4.4 Relay Minimum on Time

```
Relay 1      Min.On
(mm:ss)  01:00
```

Figure 4-61 Minimum on time

The default minimum on time is one minute and the maximum allowed value is fifteen minutes.

4.13.5 Configure Horn Submenu

The configuration parameters for the horn are similar to those for relays. A horn would not normally require a minimum on time, but this parameter allows a more versatile configuration.

4.13.5.1 Horn Summary

```
Horn 4
Delay On
```

Figure 4-62 Horn Summary

This display example shows that the horn has been configured to operate with a turn on delay and no minimum on time.

Notice that the horn number, 4, is underlined. This indicates that the digit keys can be used to jump to a particular relay, horn or strobe. The relays are numbers 1, 2 and 3; the horn is number 4 and the strobe is 5.

4.13.5.2 Horn Turn on Delay

```
Horn        Delay On
(mm:ss)  01:00
```

Figure 4-63 Horn Turn on Delay

The default turn-on delay is one minute, and the maximum allowed value is fifteen minutes.

4.13.5.3 Horn Minimum on Time

```
Horn        Min.On
(mm:ss)  00:00
```

Figure 4-64 Horn Minimum on Time

The default minimum on time is zero and the maximum allowed value is fifteen minutes.

4.13.6 Configure Strobe Submenu

The configuration parameters for the strobe are the same as those for relays. A strobe would not normally require a minimum on time, but this parameter allows a more versatile configuration.

4.13.6.1 Strobe Summary

```
Strobe 5
```


www.macurco.com 1-844-325-3050 support@macurco.com 3601 N St. Paul Ave Sioux Falls, SD 57104

```
Delay On
```

Figure 4-65 Strobe Summary

This display example shows that the strobe has been configured to operate with a turn on delay and no minimum on time.

Notice that the strobe number, 5, is underlined. This indicates that the digit keys can be used to jump to a particular relay, horn or strobe. The relays are numbers 1, 2 and 3; the horn is number 4 and the strobe is 5.

4.13.6.2 Strobe Turn on Delay

```
Strobe   Delay On
(mm:ss)  01:00
```

Figure 4-66 Strobe Turn on Delay

The default turn-on delay is one minute, and the maximum allowed value is fifteen minutes.

4.13.6.3 Strobe

```
Strobe      Min.On
(mm:ss)  00:00
```

Figure 4-67 Strobe Minimum on Time

The default minimum on time is zero and the maximum allowed value is fifteen minutes.

4.13.7 Configure Zones Submenu

The DVP-120C ventilation control can support up to three zones. The zone functionality makes the DVP-120C very flexible. For example, each zone can be configured to monitor a separate set of four sensors and control a single relay.

Another control scheme uses one zone to monitor all sensors and turn one relay on at a relatively low gas concentration. A second zone monitors the same sensors and turns on a second relay if the gas concentration reaches a higher level. The third zone can also monitor the same relays turning the last relay on as a signaling device to a live monitor station, as well as turning on the external horn and strobe, under the assumption that the ventilation system is not working.

In addition to controlling the relays based on the gas concentration, each zone can have a timed function, e.g. turn on low volume ventilation fans at 7:00 AM and turn them off at 8:00 PM.

The default Ventilation Controls are:

- Zone 1 controls Relay 1
- Zone 2 controls Relay 2
- Zone 3 controls Relay 3

4.13.7.1 Zone Controls

```
Zone 1 Controls
R1  R2  R3  H4  S5
```


www.macurco.com 1-844-325-3050 support@macurco.com 3601 N St. Paul Ave Sioux Falls, SD 57104

Figure 4-68 Zone Controls

This display example shows that Zone 1 is configured to control all of the relays plus the horn and the strobe. Each of the relays, the horn, and the strobe can be removed from (or added to) the zones control by pressing the indicated digit key. By default, Zone 1 will control Relay 1, Zone 2 will control Relay 2 and Zone 3 will control Relay 3.

Definitions:

- Zone – Defines Sensor Input & Relay / Alarm Output
- Group – Set of Sensors of the same type and output within the same zone
- Average – Activation based upon an average of sensors in a group
- Voting – Number of sensors needed to be above trip point to activate the output
- Quorum – Number of sensors need to vote, 1 = any sensor

The digit controls are:

- 1 Relay 1 added/removed from the zone's control
- 2 Relay 2 added/removed from the zone's control
- 3 Relay 3 added/removed from the zone's control
- 4 Horn added/removed from the zone's control
- 5 Strobe added/removed from the zone's control

When controlled by a zone the default horn pattern is the Triple Tap pattern, see section 4.13.6 Configure Strobe Submenu, and the strobe will turn on continuously when a zone is controlling them.

Each zone can have up to three control groups defined. Each group either monitors a sensor type or implements a timer function.

4.13.7.2 Zone Group Type

```
Z1 Group 1     NO2
Sensor TyPe: 2
```

Figure 4-69 Zone Group Type

This display example shows that group 1 in zone 1 will be monitoring Nitrogen Dioxide sensors. The valid Types are:

- 0 Timed
- 1 Carbon Monoxide (CO)
- 2 Nitrogen Dioxide (NO_2)

The default Types are:

- Group 1 in each zone Type 1 CO, Voting mode, Quorum = 1
- Group 2 in each zone Type 2 NO2, Voting mode, Quorum = 1

Timed mode turns the zone's outputs on at the START TIME if the current day is a weekday (or a weekend) and turns them off at the next occurrence of STOP TIME. The other three modes turn the outputs on if the gas concentration indicated by that type of sensor is at or above the Rising Trip Point and turns the outputs off if the concentration is less than or equal to the Falling Trip Point.

www.macurco.com 1-844-325-3050 support@macurco.com 3601 N St. Paul Ave Sioux Falls, SD 57104

4.13.7.3 Timed Day Selection

```
Z1 Group 1 Timed
Days:1   Weekdays
```

Figure 4-70 Timed Day Selection

Valid entries are:

- 1 Weekdays, Monday thru Friday, (default)
- 2 Weekends, Saturday and Sunday

4.13.7.4 Start Time

```
Z1 Group 1 Timed
Start TimE:07:00
```

Figure 4-71 Start Time Selection

The start time is entered in 24-hour format and the default value is 07:00 (7:00 AM).

4.13.7.5 Stop Time

```
Z1 Group 1 Timed
Stop Time:  18:00
```

Figure 4-72 Stop Time Selection

The stop time is entered in 24-hour format and the default value is 18:00 (6:00 PM).

4.13.7.6 Sensor Selection

```
Z1 Group 1     NO2
Sensors:02,04,11
```

Figure 4-73 Sensor Selection

Sensors are included or removed from the group by entering the two-digit channel number. After a sensor is added or removed, the list will be re-sorted so it does not matter in which order the sensors are added or removed. The default is to include all sensors of the specified type.

When the first digit of a sensor number is entered (a leading zero must be entered if the number is less than ten), the display will prompt to Add or Remove a sensor from the group.

```
Z1 Group 1     NO2
Add/Remove:_0
```

Figure 4-74 Add / Remove sensor prompt

When the second digit is entered, the sensor will be added or removed from the control group, provided the sensor is of the proper type, NO_2 in this example. If the sensor is of the wrong type, or an invalid sensor channel number is entered, the request will not be completed.

4.13.7.7 Rising Trip Point

```
Z1 Group 1     NO2
Rising:     2.5ppm
```


www.macurco.com 1-844-325-3050 support@macurco.com 3601 N St. Paul Ave Sioux Falls, SD 57104

Figure 4-75 Rising Trip Point Entry

The default rising trip points are:

Description	Carbon Monoxide	Nitrogen Dioxide
Type	CO	NO_2
Rising Level	35 ppm	2.5 ppm

Table 4-8 Default Rising Trip Point

4.13.7.8 Falling Trip Point

```
Z1 Group 1      NO2
Falling:    1.0ppm
```

Figure 4-76 Falling Trip Point Entry

The default falling trip points are:

Description	Carbon Monoxide	Nitrogen Dioxide
Type	CO	NO_2
Falling Level	15 ppm	1.2ppm

Table 4-9 Default Falling trip point

4.13.7.9 Multiple Sensor Mode

```
Z1 Group 1      NO2
Mode:  2   Voting
```

Figure 4-77 Sensor Mode Selection

When multiple sensors are being monitored by a group, the output decision can be based on either voting, as shown here, or the average of all sensors in the group. Valid modes are:

- 1 Average
- 2 Voting (default)

When the configuration is Average, the gas concentrations from all sensors in the group are averaged and if the average is greater than or equal to the rising trip point the zone outputs(s) are activated. When the average is less than or equal to the falling trip point the zone output(s) is de-activated. If the average is between the two trip points, the outputs remain in their previous state.

When the configuration is Voting, the number of sensors in the group indicating a value greater than or equal to the rising trip point is counted. If the count is greater than or equal to the quorum then the zone output(s) are activated. If the count of sensors indicating less than or equal to the falling trip point is greater than or equal to the quorum the zone output(s) is de-activated. Activating the output(s) is given priority if a group has an equal number of sensors with gas readings greater than or equal to the rising trip point and sensors with readings less than or equal to the falling trip point.

4.13.7.10 Multiple Sensor Quorum

www.macurco.com 1-844-325-3050 support@macurco.com 3601 N St. Paul Ave Sioux Falls, SD 57104

```
Z1  Group  1      NO2
Quorum:   _2
```

Figure 4-78 Quorum Entry

It is up to the installer to ensure that the quorum entry is appropriate for the configuration. Valid entries are one to twelve, but a value greater than the number of sensors being monitored by the group stops the group from controlling the outputs. The default quorum value is 1.

4.13.8 Configure Signals Submenu

The DVP-120C can drive the buzzer, horn, and strobe with different sound patterns to indicate the severity of the current conditions. These patterns are selectable by the installer using this group of submenus. Once again, the left and right keys will scroll through the signal types and the up and down keys will scroll to the signal sources.

4.13.8.1 Alarm Signal Summary

The alarm signals are in response to one or more sensors indicating gas levels at or above the sensors' configured alarm level.

```
Alarm Signals
Buzz,Horn,StrobE
```

Figure 4-79 Alarm Signals

This display example shows that alarms are signaled by the internal buzzer, the external horn, and the strobe.

4.13.8.2 Alarm Buzzer Signal

```
Alarm Signals
Buzz:2  Intermit.
```

Figure 4-80 Buzzer Alarm Signal

This display example shows that the buzzer will signal an alarm condition with an intermittent signal. The signal definitions are:

- 1 Continuous Buzzer sound continuously
- 2 Intermittent One second on at two-second intervals (default)
- 3 Double tap Two beeps at five-second intervals
- 4 Triple tap Three short beeps at ten-second intervals
- 5 Off Buzzer will not sound

4.13.8.3 Alarm Horn Signal

```
Alarm Signals
Horn:2  Intermit.
```

Figure 4-81 Horn Alarm Signal

This display example shows that the horn will signal an alarm condition with an intermittent signal. The signal definitions are:

- 1 Continuous Horn sounds continuous (default)
- 2 Intermittent One second on at two-second intervals

www.macurco.com 1-844-325-3050 support@macurco.com 3601 N St. Paul Ave Sioux Falls, SD 57104

- 3 Double tap Two beeps at five-second intervals
- 4 Triple tap Three short beeps at ten-second intervals
- 5 Off Horn will not sound

4.13.8.4 Alarm Strobe Signal

```
Alarm Signals
Strobe:1 Contin.
```

Figure 4-82 Alarm Signals

This display example shows that the strobe will signal an alarm condition with a continuous signal. The signal definitions are:

- 1 Continuous (default)
- 2 Intermittent One second on at two-second intervals
- 3 Double tap Two beeps at five-second intervals
- 4 Triple tap Three short beeps at ten-second intervals
- 5 Off Strobe will not flash

4.13.8.5 Warning Signal Summary

The warning signals are in response to one or more sensors indicating gas levels at or above the sensors' configured warning level.

```
Warning Signals
Buzz
```

Figure 4-83 Warning Signal

This display example shows that warnings are signaled by the internal Buzzer only.

4.13.8.6 Warning Buzzer Signal

```
Warning Signals
Buzz:5          OFF
```

Figure 4-84 Buzzer Warning Signal

This display example shows that the buzzer will not signal a warning condition. The signal definitions are:

- 1 Continuous
- 2 Intermittent One second on at two-second intervals
- 3 Double tap Two beeps at five-second intervals
- 4 Triple tap Three short beeps at ten-second intervals
- 5 Off Buzzer will not sound (default)

4.13.8.7 Warning Horn Signal

```
Warning Signals
```


www.macurco.com 1-844-325-3050 support@macurco.com 3601 N St. Paul Ave Sioux Falls, SD 57104

```
Horn:5          OFF
```

Figure 4-84 Strobe Warning Signal

This display example shows that the horn will not signal a warning condition. The signal definitions are:

- 1 Continuous
- 2 Intermittent One second on at two-second intervals
- 3 Double tap Two beeps at five-second intervals
- 4 Triple tap Three short beeps at ten-second intervals
- 5 Off Horn will not sound (default)

4.13.8.8 Warning Strobe Signal

```
Warning Signals
Strobe:5        OFF
```

Figure 4-85 Strobe Warning Signal

This display example shows that the strobe will not signal a warning condition. The signal definitions are:

- 1 Continuous
- 2 Intermittent One second on at two-second intervals
- 3 Double tap Two beeps at five-second intervals
- 4 Triple tap Three short beeps at ten-second intervals
- 5 Off Strobe will not flash (default)

4.13.8.9 Trouble Signal Summary

The trouble signals are in response to one or more sensor faults, either as a defined current level or because of wiring problems.

```
Trouble Signals
Buzz
```

Figure 4-86 Trouble Signals

This display example shows that troubles are signaled by the internal buzzer only.

4.13.8.10 Trouble Buzzer Signal

```
Trouble Signals
Buzz:4        Triple
```

Figure 4-87 Buzzer Trouble Signal

This display example shows that the buzzer will signal a trouble condition with a triple tap signal. The buzzer signal definitions are:

- 1 Continuous
- 2 Intermittent One second on at two-second intervals

www.macurco.com 1-844-325-3050 support@macurco.com 3601 N St. Paul Ave Sioux Falls, SD 57104

- 3 Double tap Two beeps at five-second intervals
- 4 Triple tap Three short beeps at ten-second intervals (default)
- 5 Off Buzzer will not sound

4.13.8.11 Trouble Horn Signal

```
Trouble Signals
Horn: 5          OFF
```

Figure 4-88 Horn Trouble Signal

This display example shows that the horn will not signal a trouble condition. The horn signal definitions are:

- 1 Continuous
- 2 Intermittent One second on at two-second intervals
- 3 Double tap Two beeps at five-second intervals
- 4 Triple tap Three short beeps at ten-second intervals
- 5 Off Horn will not sound (default)

4.13.8.12 Trouble Strobe Signal

```
Trouble Signals
Strobe: 5        OFF
```

Figure 4-89 Strobe Trouble Signal

This display example shows that the strobe will not signal a trouble condition. The strobe signal definitions are:

- 1 Continuous
- 2 Intermittent One second on at two-second intervals
- 3 Double tap Two beeps at five-second intervals
- 4 Triple tap Three short beeps at ten-second intervals
- 5 Off Strobe will not flash (default)

www.macurco.com 1-844-325-3050 support@macurco.com 3601 N St. Paul Ave Sioux Falls, SD 57104

5 BACnet

5.1 General Information

Following standard objects defined by BACnet are used in DVP-120C:

a. Analog Input
b. Binary Input

BACnet objects available for each detector connected to DVP-120C are as follows:

5.1.1 Analog input – Sensor ID

The value in the BACnet object refers to the Sensor ID/Type of Macurco Gas detector. Values of 1 to 8 are only valid values.

5.1.2 Analog Input – Gas Reading

This represents the gas reading of the detector. If the reading is not reliable then it will have value 6553.5. The reading may be unreliable for any of the following reasons:

- Registration Status of MRS-485 is non-zero (it is non-zero during detector warm-up period, trouble code, MRS-485 registration in progress, and other miscellaneous MRS-485 error indicated by red Status LED in MRS-485).
- A successful request/response has not been detected for the reading (i.e. a timeout occurred, or a detector does not exist).
- The reading is under or over range DVP-120C compares the current reading of a detector with its range and anytime it is outside the range, it will set the gas reading to 6553.5.
- Invalid Sensor ID Type (1 - 9 are the only valid values).

5.1.3 Binary Input – MRS Trouble

This binary input object is set (i.e. the value is 1) when there is an error in MRS-485.

5.1.4 Binary Input – Over Range

This binary input object is set when reading from the detector is over the range.

5.1.5 Binary Input – Trouble

This binary input object is set when the detector is in trouble condition.

5.1.6 Binary Input – DVP Com Error

If the panel stops making Modbus request to the detectors for a specified timeout period of 3 seconds, then a timeout event is triggered, and all gas reading is set to 6553.5, and DVP Com Error Binary Input data is set to 1. If timeout event is not triggered value is set to 0.

One way to find out Modbus Address and information type is to look at the value of the property “Object Name”. E.g. ”S13 Sensor ID” meant address is 13 and information contained by BACnet object is “Sensor ID”.

5.2 Macurco Network Parameter Utility (NPU)

Macurco Network Parameter Utility is used to configure BACnet network settings in DVP-120C via USB connection. In addition to this, it allows updating the panel with BACnet configuration in the field and automatically manages device firmware dedicated for BACnet functionality. To receive the latest version of Macurco NPU, as well as firmware and configurations, download the Macurco NPU from our website http://www.macurco.com/downloads/ .

www.macurco.com 1-844-325-3050 support@macurco.com 3601 N St. Paul Ave Sioux Falls, SD 57104

If a newer version of firmware is available in the NPU you will be prompted to update when connected to the DVP-120C.

NOTE: Macurco NPU cannot use to upload DVP-120 firmware.

Figure 5-4 shows the screen of NPU software when a device is connected. As shown in the Figure, it displays the device name with device configuration version under it. Fields greyed out are read-only. Only protocol available as of now is BACnet MS/TP Server.

Address - The address of the device in the network.

Default baud rate - 38400 bit/sec.

APDU Timeout - The time in milliseconds that the driver will wait for a response from a device after sending a request.

Number of APDU Retries - The number of times the driver will retry a request when a response is not received.

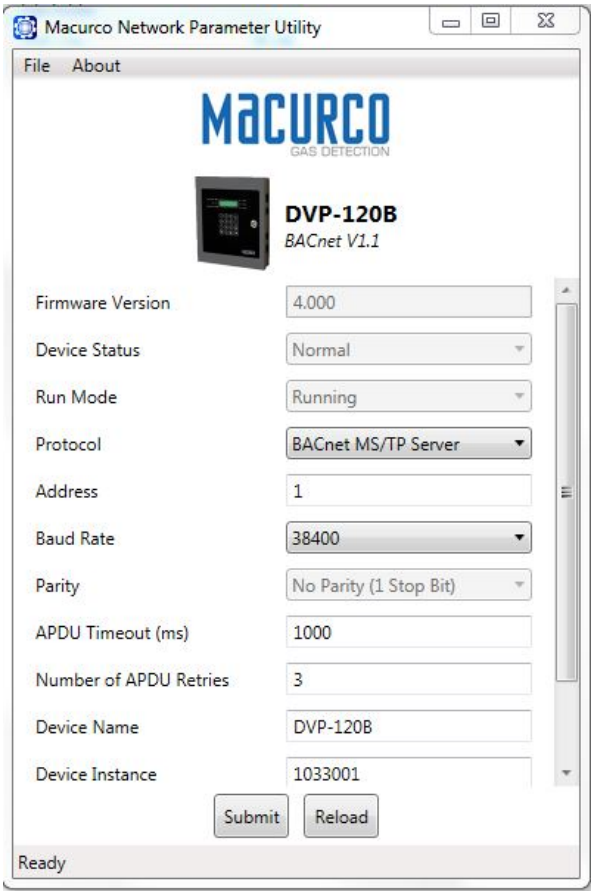

Figure 5-1 NPU Home Screen

Device Name - the description assigned to the device. The device name must be unique across entire BACnet network and must be between 1 and 16 characters in length.

www.macurco.com 1-844-325-3050 support@macurco.com 3601 N St. Paul Ave Sioux Falls, SD 57104

Device Instance - node's instance number and must be unique across the entire BACnet network. The value must be between 0 and 4194302.

Max Master - defines the highest allowable address (0 to 127) for MS/TP master nodes on the network. Any address higher than this will not receive the token from the device. This value must be greater than or equal to device address. Set this field to 127 if the highest address on the network is unknown.

Reload button - Will load the current settings for DVP-120C. To change the settings (on BACnet end) in DVP-120C, change the parameter in DVP-120C and hit Submit.

Device Update File (.DUF)

DVP-120C NPU Folder downloaded from http://www.macurco.com/downloads contains a file with extension '.DUF'. This file is the configuration file for BACnet functionality. This device configuration file can be uploaded to DVP-120C using following procedure.

a. Open the Macurco Network Parameter Utility Software.
b. If DVP-120C is connected to PC via USB, the software will display home screen like one in Figure 5-1. If Software does not detect the panel it will display "No Device Connected". Make sure software detects the panel before proceeding.
c. Go to File (on the top left corner of the software) and select "Update Device…".
d. A new window will pop up to select the file. Select the DUF file and hit Open.
e. Now the DUF file will be loaded into the panel. The progress of the file update is displayed at the bottom.

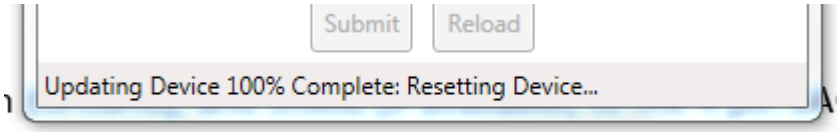

f. Once the update is complete it will reset the device and it will return to home screen. Verify the correct version of the device configuration file is updated. Device configuration version is displayed alongside the product image displayed in NPU software. It has format "BACnet VX.Y" where X.Y corresponds to the device configuration file version.

5.3 BACnet Connection

The Macurco DVP-120C BACnet output uses a 3-wire shielded RS-485 connection, Data-A, Data-B, Common, and Shield (optional). RS-485 connection for BACnet output is labeled 'TB2'. This can be converted to USB, Ethernet and Serial connections with the use of corresponding conversion equipment. For this example, we will use a USB to RS-485 Serial Converter Cable.

www.macurco.com 1-844-325-3050 support@macurco.com 3601 N St. Paul Ave Sioux Falls, SD 57104

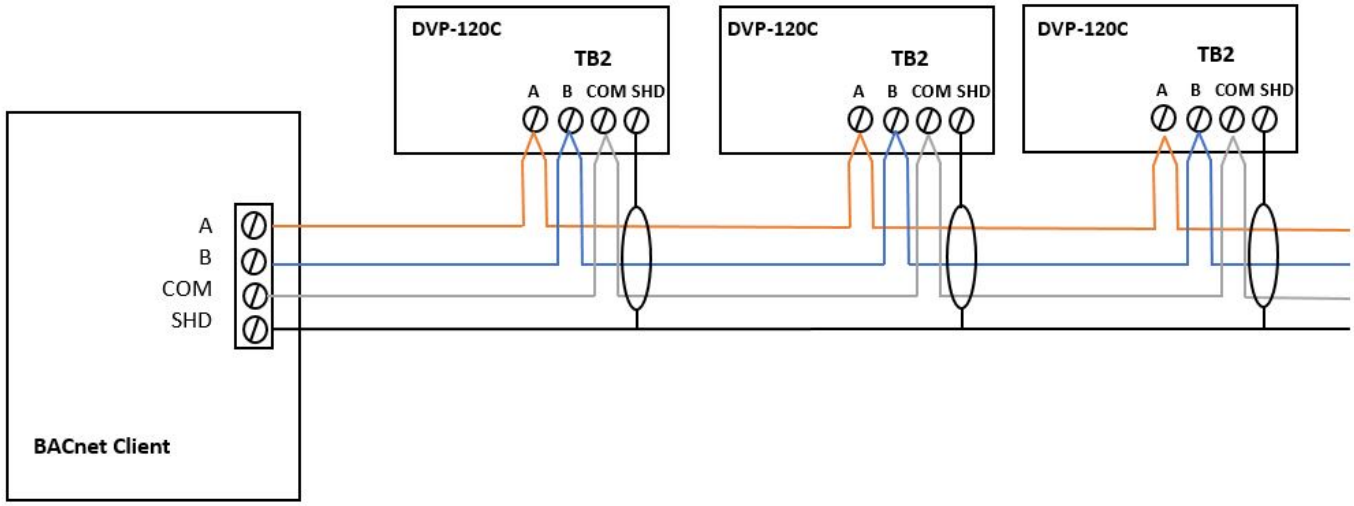

Figure 5-3 BACnet Connection

5.3.1 Serial RS-485 to USB Wiring

- Connect the required Data A, Data B and Common (Ground), and shield (if available) to the 4 pin BACnet connector.

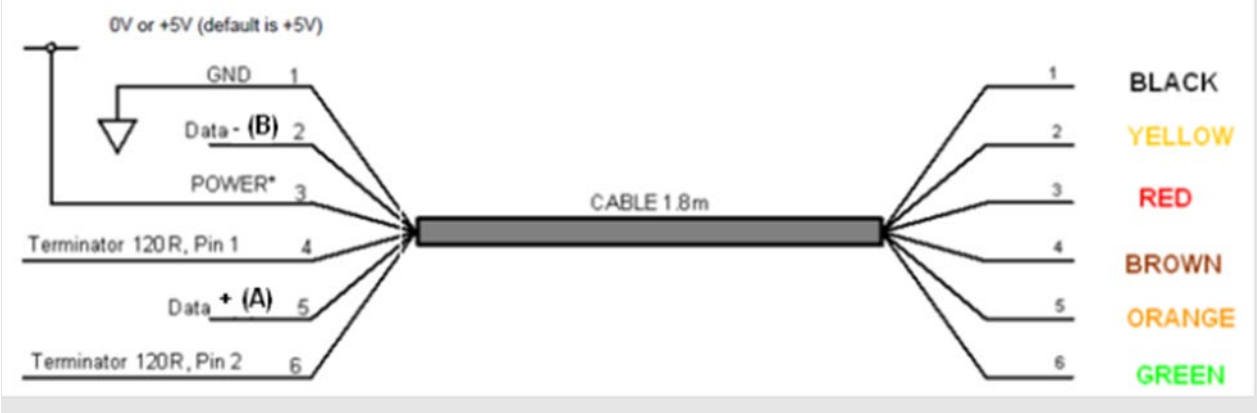

Figure 5-2 RS-485 to USB

NOTE: The color code for your cable may be different than the one shown here, reference the user manual for your specific cable for accurate wiring information.

- Plug the USB connection into the USB port of your computer, install any necessary drivers for the USB to RS-485 Serial Converter cable.

www.macurco.com 1-844-325-3050 support@macurco.com 3601 N St. Paul Ave Sioux Falls, SD 57104

- Open your BACnet Software Solution and verify the Macurco DVP-120C BACnet Panel is communicating with the software.

5.3.2 BACnet MS/TP to BACnet/IP

Using a standard serial to Ethernet media converter will not work with BACnet MS/TP due to the strict timing requirements of the protocol. A BACnet Router must be used to perform the conversion from BACnet MS/TP to BACnet/IP.

Figure 5-3 RS-485 to Ethernet (TCP/IP)

5.4 BACnet Software

There are a number of software applications available to read the BACnet output of the Macurco DVP-120C Control panel. For more information on these please contact Macurco Support at 1-844-325-3050 or support@macurco.com

6 Troubleshooting

The DVP-120/DVP-120C is tested at the factory for reliable operation. Most problems can be traced to the set-up of configurable features and modes, system wiring or trouble with the sensors.

⚠ WARNING
Failure to follow instructions outlined in this user manual can result in sickness or death.

6.1 System Status Light

The system status light (section 4 Operation) is normally green indicating power is present but will change to yellow whenever the controlling firmware detects a Trouble condition. Possible trouble conditions are:

www.macurco.com 1-844-325-3050 support@macurco.com 3601 N St. Paul Ave Sioux Falls, SD 57104

- Any configured channel has less than 4 mA flowing in the current loop.
- A sensor is reporting a trouble condition.
- Any configured channel wiring is open.
- Internal controller board problems are detected.

6.1.1 Input Channel Trouble

Any time the POWER light is yellow, the first thing the technician should consider is that one of the input channels is in trouble. Reviewing the Sensor Status displays (using the up and down keys), should reveal which channel has a problem since the gas reading will be replaced with the word TROUBLE. Be sure that the 4-20mA output on each sensor is set to "On".

6.1.1.1 No Sensor

A common source of a trouble condition is an input channel that is configured for a sensor that does not exist. In this case, the system expects to see current flowing within the current loop, but there cannot be current if there is no sensor connected. Either fix the miss-wired sensor or change the sensor type to NONE, section 4.13.3 Configure Sensors Submenu. After returning to normal mode (using the MENU key), the power light should return to steady green. Be sure that the 4-20mA output on each sensor is set to "On".

6.1.1.2 Wrong Sensor Type

If all channels are configured properly, another source a trouble condition could be the type of sensor attached to an input channel. Macurco™ Toxic sensors can indicate high gas concentrations with signals of up to 24 mA in the current loop. However, a combustible sensor can indicate a trouble condition with a 21-mA signal. Therefore, a toxic sensor connected to channel which is configured for a combustible sensor can cause a fault indication if the gas concentration is high enough.

6.1.1.3 Sensor Trouble

All Macurco™ Sensors are either supplied with a STATUS LED that will indicate the health of the device or will display a trouble condition on the digital display. Macurco sensors may be tested by depressing the TEST button on the sensor printed circuit board, or (depending on the type of sensor), the button on the interior front panel of the unit. Macurco sensors will step the output current level from 4 mA to 20 mA over the course of the warm-up period, allowing the technician to determine where the trouble condition exists. If the sensor is still in a trouble condition, resetting the power may clear the trouble condition. Remove one of the power wires from the sensor terminal strip causing the sensor to go through a power-up reboot. Be sure that the 4-20mA output on each sensor is set to "On".

6.1.1.4 Faulty Wiring

Finally, the wiring between the DVP-120C and the sensor should be investigated. The power input to the sensor should be investigated at the sensor. Since Macurco sensors are rated for operation between 12 and 24 VDC or VAC, the voltage drop between the power supply and the sensor should not be an issue if the wiring guidelines in Table 2 2 are followed. A multimeter can be inserted to check the current flow within the loop, or a continuity test can be performed on all four wires between the DVP-120C and the sensor. Ensure power is removed from the DVP-120C prior to removing the input or output connectors from the DVP-120C controller board. Be sure that the 4-20mA output on each sensor is set to "On".

6.1.1.5 Resettable Fuse

Each sensor channel is provided with a PTC-resettable fuse internal to the DVP-120C to protect against over current situations. To reset a sensor channel, power should be removed from the channel. This can be accomplished by

www.macurco.com 1-844-325-3050 support@macurco.com 3601 N St. Paul Ave Sioux Falls, SD 57104

removing power from the sensor – causing the loop current to go to zero, or by completely removing power from the DVP-120C.

6.1.2 Internal Controller board Trouble

If the sensor status display and investigative efforts reveal no problems with the input channel current loops and channel configuration, the most likely trouble condition is an internal problem detected by the DVP-120 controller. In this case, contact the Macurco Technical Support at 1-844-325-3050 for advice and help.

6.2 Timed Ventilation Problem

When using the timed ventilation mode, the system clock should be checked regularly (at least twice a year). The battery-backed real time clock in the DVP-120 does not adjust for daylight saving time so the spring and fall switch over points are good choices to check the system clock.

⚠ WARNING
Use only for monitoring the gases which the sensors and equipment are designed to detect. Failure to do so may result in exposures to gases not detectable and result in serious injury or death. For proper use, see supervisor or User manual, or Contact Technical Support at 1-844-325-3050.

6.3 No Power

The DVP-120C starts up as soon as power is applied to the microcontroller, and the DVP-120C is designed to have power continuously applied to the unit. An external indication of successful power application to the unit is the immediate operation of the Status Lamps grouped around the LCD. If the operator does not see an immediate response from the status lamps, power should be checked at AC~.

If the correct voltage is noted at AC~, then the internal fuse of the DVP-120C should be investigated. The DVP-120C is protected from over-current and transient situations by the fuse at F3. After removing power from the DVP-120C, F3 can be checked by removing the safety cover. If necessary, replace F3 with a 5x20 mm SLO-BLO fuse with a rating of 1 Amp 250V, e.g. Littelfuse P/N 218001. Be sure to Replace the Safety Cover on F3 before re-applying power to the DVP-120C.

6.4 LCD Display Unreadable

It is possible that the LCD is unreadable due to temperature or aging of the control panel. If this is the case the following steps should rectify the problem:

- Hold the MENU key for three (3) seconds. After three seconds, the power led will turn red. After two additional seconds, the LCD backlight will also be turned off.
- Press the UP and DOWN cursor keys to change the LCD contrast. Each press of the UP or DOWN cursor key will change the contrast by a step in that direction. Adjust the contrast for best viewing.
- Press any other key to exit the contrast-setting mode.

www.macurco.com 1-844-325-3050 support@macurco.com 3601 N St. Paul Ave Sioux Falls, SD 57104

6.5 Keypad does not respond

6.5.1 LCD shows KEYS LOCKED

The keypad can be unlocked by holding the zero (0) key for 3 seconds. At this time the backlight will turn on and the display will return to normal mode. The keypad can again be locked by holding the zero key for 3 seconds until the display shows KEYS LOCKED.

6.5.2 After silencing Alarm, Warning or Trouble

LCD continues to show the alarm, warning or trouble message.

It is possible that the horn or strobe have been configured to respond in alarm, warning or trouble conditions, even though there is no horn or strobe connected (or perhaps they are used for some purpose that is not audible or visible). First, hold the HUSH key for five seconds, or until the display changes to “ALARM silenced for 5 minutes” or another relevant message. Second, use the configuration menu to disable the horn or strobe, if they are not being used for some other purpose.

6.6 Power Failure

After any power failure, the user should check the system clock. While system parameters are maintained in memory, the system clock is backed-up by a limited-capacity button cell battery.

6.7 MRS-485 Modbus Application

The MRS-485 will monitor the 4-20 mA current output of the detector. At power up and during its warm-up period, the 6-Series detector will communicate its sensor type over the 4-20 current output using a custom protocol. The MRS-485 will automatically register each 6-Series detector as it is programmed with information about all the detectors to which it can be connected. The MRS-485 will use this information to determine the gas level sensed by the 6-Series detector by measuring the 4-20 mA current-loop output during normal operation of the detector.

6.7.1 Normal Operation

1. When the LED is solid GREEN, the operation is normal, the MRS-485 knows the detector type, no errors are detected, and no MODBUS data are being received or transmitted over the RS-485 line.
2. When the LED is GREEN with random bursts of AMBER, the operation is normal and now data are being received or transmitted over the RS-485 line. The AMBER LED will come on anytime that there is data traffic.

6.7.2 Unknown Sensor Code

GREEN/OFF Alternating every 500 milliseconds - The MRS-485 doesn’t know the detector type, no MODBUS communication is in progress and no errors are detected.

To correct this condition:

1. Disconnect the power line from the MRS-485.
2. Disconnect the MODBUS line from the MRS-485.
3. Re-connect the Modbus Line to the MRS-485.
4. Re-connect the power line to the MRS-485.

6.7.3 Error Codes

Solid RED - The MRS-485 detected an error and no MODBUS communications are in progress.

RED with random bursts of AMBER - The MRS-485 detected an error and AMBER is displayed when data are received or transmitted over the RS-485 line.

www.macurco.com 1-844-325-3050 support@macurco.com 3601 N St. Paul Ave Sioux Falls, SD 57104

There are a number of conditions which are signalized in this way:

1. Current EEPROM Settings not initialized
2. Current EEPROM Settings have a bad checksum
3. Factory EEPROM Settings not initialized
4. Factory EEPROM Settings have a bad checksum
5. Unknown Sensor exponent value
6. Watchdog Reset
7. Loaded Factory EEPROM Settings in EEPROM Current Settings
8. Latched sensor type different than registered sensor type
9. Unknown sensor type because registration failed

6.7.4 Dip Switch Settings Codes

RED/GREEN	Alternating every 200 milliseconds indicates that MRS-485 is in programming mode and waiting for the user to enter new settings using the 8 switches.
RED/OFF	Alternating every 200 milliseconds indicates that saving new settings failed.
GREEN/OFF	Alternating every 200 milliseconds indicates that saving new settings passed.
RED/OFF	Alternating every 500 milliseconds indicates that selected MODBUS address is not an accepted value.

www.macurco.com 1-844-325-3050 support@macurco.com 3601 N St. Paul Ave Sioux Falls, SD 57104

7 Testing & Maintenance

Macurco recommends performing the DVP Functionality Test at least once a year.

7.1 Testing

7.1.1 Keypad Test

1. Power down the DVP-120C.
2. Remove the Jumper Shorting Connector from the EXT header and place the Jumper Shorting Connector onto the top two pins of the SYS header.
3. Power up the DVP-120C and close the panel door. The LCD will display "Current Password ####" for 3 seconds (where #### is the current set password) then will display "V24 =##. #-OK", where V24 is the expected Power Supply output voltage and the ##.# is the actual Power Supply output voltage. If the status is OK, then proceed to the test process by pressing 0 key.
4. Read and follow the instruction on the LCD to test the keypad. When finished, the LCD will display "Keypad Test OK 0-Control Buzzer".
5. Press 0 key to test the buzzer. You will hear the buzzer sound. To turn off the sound, press the 0 key again.
6. When the keypad test has passed, and the buzzer sound is good, turn off the power of the DVP-120C.
7. Remove the jumper shorting connector from SYS header and install onto the two bottom pins of EXT header marked +24V.
8. Turn ON the DVP-120C and it should operate as explained in section 4.2 Initial Operating Mode.

7.1.2 Functionality Test

1. Turn off the DVP-120 or DVP-120C.
2. For DVP-120 move the jumper from bottom two pins of EXT connector to pins 1 and 2 of EXT connector. For DVP-120C, move the jumper in J10 to left two pins of J10.
3. Turn on the DVP-120 or DVP-120C.

Self-test is performed when the panel is powered on with a jumper in the position indicated in above step. A self-test pass is indicated by "Test Mode mm: ss – Press any key" on the LCD where "mm" are minutes and "ss" are seconds. Confirm "ss" is incremented every second.

4. Press following keys in the keypad to test corresponding functionality.

Key in Keypad	Functionality Test
0	Strobe
9	Horn
Menu	Relay 1
Hush	Relay 2
Up	Relay 3
Right	Buzzer

Table 7-1 Keypad keys for Testing Functionality

5. If all test is complete, turn off the DVP-120 or DVP-120C. Move the jumper back to bottom two pins of EXT connector for DVP-120 and right two pins of J10 for DVP-120C.

www.macurco.com 1-844-325-3050 support@macurco.com 3601 N St. Paul Ave Sioux Falls, SD 57104

6. Turn ON DVP-120 or DVP-120C and verify the normal operation as explained in section 4.2 Initial Operating Mode.

7.2 Maintenance

DVP-120C do not have parts that require regular maintenance.

For fuse, replacement see Section 6.3 No Power of the manual.

In the event of trouble or any kind of help and support contact Technical Support at 1-844-325-3050

www.macurco.com 1-844-325-3050 support@macurco.com 3601 N St. Paul Ave Sioux Falls, SD 57104

8 Appendix A – Table of Figures

Figure 3-1 Mounting Holes 11
Figure 3-2 Typical Layout 11
Table 3-1 Main Power Connection 12
Figure 3-3 System Wiring Diagram 13
Figure 3-4 DVP-120C Internal View 13
Figure 3-6 MRS-485 Wiring 14
Table 3-2 Wire selection for a 60W power supply 15
Figure 3-7 Relay Connector 15
Figure 3-8 Horn & Strobe Connector 16
Table 3-3 Wire gauge for Horn & Strobe functions 16
Figure 3-9 MRS-485 Installation 17
Figure 3-10 Modbus Wiring 18
Figure 3-11 End of Line Resistor 18
Figure 3-12 EOL Placement Less than 1000 ft 20
Figure 3-13 EOL Placement greater than 1000 ft 20
Figure 3-14 MRS-485 Dip Switch (Address “50” Shown) 20
Table 3-4 Dip switch settings 21
Figure 4-1 Model Display 22
Figure 4-2 Warm-Up Display 22
Figure 4-3 Keypad layout 23
Table 4-1 Hush function key 24
Figure 4-4 Normal System Display 24
Figure 4-5 Sensor Prompt 25
Figure 4-6 Alarm Display 25
Figure 4-7 Alarm Silenced message 26
Figure 4-8 Warning display 26
Figure 4-9 Warning Silenced message 26
Figure 4-10 Trouble display 27
Figure 4-11 Trouble Silenced message 27
Figure 4-12 Unoccupied Sensor Failed 27
Figure 4-13 Unoccupied Failure Silenced 28
Figure 4-14 Occupied Sensor Failure 28
Figure 4-15 Occupied Failure Silenced 28
Figure 4-16 Calibration Due 29
Table 4-2 Calibration Due Silence Period 29
Figure 4-17 Calibration Due Silenced 29
Figure 4-18 Calibration Required 29
Figure 4-19 Calibration Required Silenced 30
Figure 4-20 Zone Signal Display 31
Figure 4-21 Zone Signal Silenced 31
Figure 4-22 Hardware Summary 31
Figure 4-23 Save Configuration? Prompt 31
Figure 4-24 Set Time of Day 32

www.macurco.com 1-844-325-3050 support@macurco.com 3601 N St. Paul Ave Sioux Falls, SD 57104

Figure 4-25 Enter Hours 33
Figure 4-26 Enter Minutes 33
Figure 4-27 Set Day of the Week 33
Figure 4-28 Load Default Configuration 33
Table 4-3 Default Configuration Settings 34
Figure 4-29 Change Password 34
Figure 4-30 35
Figure 4-31 35
Figure 4-32 35
Table 4-4 35
Figure 4-33 35
Figure 4-33 35
Figure 4-34 Active Period Weekday 36
Figure 4-35 Active Period Weekend 36
Figure 4-36 Occupied Time Period 37
Figure 4-37 Configuration Changed 37
Figure 4-38 Configure Sensor Type 38
Figure 4-39 Sensor Definition 38
Figure 4-40 Sensor Tag 38
Figure 4-41 Sensor Units 38
Figure 4-42 Depletion Type 38
Figure 4-43 Decimal Points 38
Figure 4-44 Resolution 39
Figure 4-45 Sensor Range 39
Figure 4-46 Alarm Level 39
Figure 4-47 Warning Level 39
Figure 4-48 Rising Trip Point 39
Figure 4-49 Falling Trip Point 39
Figure 4-50 Enter Password 39
Figure 4-51 Password Prompt 40
Figure 4-52 Wrong Password Prompt 40
Figure 4-53 Sensor Summary 40
Figure 4-54 Sensor Summary 41
Figure 4-55 Sensor Alarm Level 41
Table 4-5 Default Alarm levels 41
Figure 4-56 Sensor Warning Level 41
Table 4-6 Default warning levels 41
Figure 4-57 Sensor Range 41
Table 4-7 Default Range 42
Figure 4-58 Relay Summary 42
Figure 4-59 Relay Mode 42
Figure 4-60 Delay time 43
Figure 4-61 Minimum on time 43
Figure 4-62 Horn Summary 43

www.macurco.com 1-844-325-3050 support@macurco.com 3601 N St. Paul Ave Sioux Falls, SD 57104

Figure 4-63 Horn Turn on Delay 43
Figure 4-64 Horn Minimum on Time 43
Figure 4-65 Strobe Summary 44
Figure 4-66 Strobe Turn on Delay 44
Figure 4-67 Strobe Minimum on Time 44
Figure 4-68 Zone Controls 45
Figure 4-69 Zone Group Type 45
Figure 4-70 Timed Day Selection 46
Figure 4-71 Start Time Selection 46
Figure 4-72 Stop Time Selection 46
Figure 4-73 Sensor Selection 46
Figure 4-74 Add / Remove sensor prompt 46
Figure 4-75 Rising Trip Point Entry 47
Table 4-8 Default Rising Trip Point 47
Figure 4-76 Falling Trip Point Entry 47
Table 4-9 Default Falling trip point 47
Figure 4-77 Sensor Mode Selection 47
Figure 4-78 Quorum Entry 48
Figure 4-79 Alarm Signals 48
Figure 4-80 Buzzer Alarm Signal 48
Figure 4-81 Horn Alarm Signal 48
Figure 4-82 Alarm Signals 49
Figure 4-83 Warning Signal 49
Figure 4-84 Buzzer Warning Signal 49
Figure 4-84 Strobe Warning Signal 50
Figure 4-85 Strobe Warning Signal 50
Figure 4-86 Trouble Signals 50
Figure 4-87 Buzzer Trouble Signal 50
Figure 4-88 Horn Trouble Signal 51
Figure 4-89 Strobe Trouble Signal 51
Figure 5-1 NPU Home Screen 53
Figure 5-3 BACnet Connection 55
Figure 5-2 RS-485 to USB 55
Figure 5-3 RS-485 to Ethernet (TCP/IP) 56
Table 7-1 Keypad keys for Testing Functionality 61
Table B-1 Default settings 68
Figure B-1 System Wiring Diagram 69
Figure B-2 Hardware Summary 69
Figure B-3 Keypad Layout 69
Figure B-4 Save Configuration? Prompt 69
Figure B-5 Set Time of Day 70
Figure B-6 Set Day of the Week 70
Figure B-7 Load Default Configuration 70
Figure B-8 Change Password 70

www.macurco.com 1-844-325-3050 support@macurco.com 3601 N St. Paul Ave Sioux Falls, SD 57104

Figure B-9 Enter Password 71
Figure B-10 Wrong Password Prompt 71
Figure B-11 Sensor Summary 71
Figure B-12 Sensor Type 72
Figure B-13 Sensor Alarm Level 72
Figure B-14 Sensor Warning Level 72
Figure B-15 Sensor Range 72
Figure B-16 Relay Summary 72
Figure B-17 Relay Mode 72
Figure B-18 Turn on Delay 72
Figure B-19 Minimum on Time 73
Figure B-20 Zone Controls 73
Figure B-21 Zone Controls 73
Figure B-22 Sensor Selection 73
Figure A-23 Rising Trip Point Entry 74
Table B-2 Default Raising trip points 74
Figure B-24 Falling Trip Point Entry 74
Figure B-25 Sensor Mode Selection 74
Figure B-26 Alarm Signals 75
Figure B-27 Buzzer Alarm Signal 75
Figure B-28 Horn Warning Signal 75
Figure B-29 Buzzer Trouble Signal 75

www.macurco.com 1-844-325-3050 support@macurco.com 3601 N St. Paul Ave Sioux Falls, SD 57104

9 Appendix B – Quick Setup

IMPORTANT: To properly and effectively program the system you must configure the Sensors, Relays, Zones, and Signals. If the user has not entered any parameters, the system WILL NOT be monitoring the sensors or controlling the ventilation system. The relays will be in the not actuated state and the horn and strobe outputs will be off. Be sure that the 4-20mA output on each sensor is set to "On".

1. Configure System; allows the installer to set the time of day, the day of the week, load the default configuration, configure custom sensors and change the password.
2. Configure Sensors; defines the Sensor type – CO, NO_2, or None and sets Alarm Level, Warning Level, and Sensor Range
3. Configure Relays, Horn and Strobe: defines operation as Normally Off or On, Delay Time, Minimum Runtime – this applies to all three relays as well as the horn and strobe.

Note: The Delay Time default is 1 minute. If the duration of a test procedure or gas exposure is less than 1 minute, the relays, horns, and strobes may not engage even though the DVP-120C display and the sensors respond. When testing the system disable the delay (set Delay Time to zero minutes/seconds).

4. Configure Zones: defines Sensor Input & Relay/Alarm Output and sets up the sensor Groups (set of sensors of the same type and output within the same zone) - Sensor type, Sensor Number, Rising Trip point and Falling Trip point
5. Configure Signals: defines the output of the Alarm, Warning and Trouble Signals (Buzzer, Horn and Strobe) as On, Off, Intermittent, Continuous, etc.

Note 1: The default Password is 1234. If the password has been changed and/or lost:

- Power down the unit. Remove the Jumper Shorting Connector from the EXT header and place it on the top two pins of the SYS header.
- Power up the DVP-120. The first display is the current password on the unit.
- Power down the unit. Remove the Jumper Shorting Connector from the SYS header and place it back onto the two bottom pins of the EXT header.

Note 2: When entering multiple digit values the Up arrow (↑) acts as an enter key and it is not necessary to enter all allowed fields. Any other key is ignored or cancels the current parameter change.

Note 3: The MENU key will cause the system to shift to the Configuration Menu. The up and down and left and right arrow keys will scroll through all configuration parameters.

Default Configuration:

- Password 1234
- Sensors Undefined
- Alarm signals Buzzer = Intermittent, Horn = Intermittent, Strobe = Continuous
- Warning signals Buzzer = Off, Horn = Off, Strobe = Off
- Trouble signals Buzzer = Triple Tap, Horn = Off, Strobe = Off
- Relay 1 Normally off, 1-minute turn on delay, 1 minute minimum on time
- Relay 2 Normally off, 1-minute turn on delay, 1 minute minimum on time

www.macurco.com 1-844-325-3050 support@macurco.com 3601 N St. Paul Ave Sioux Falls, SD 57104

- Relay 3 Normally off, 1-minute turn on delay, 1 minute minimum on time
- Horn Normally off, 1-minute turn on delay, 0 (zero) minimum on time
- Strobe Normally off, 1-minute turn on delay, 0 (zero) minimum on time
- Zone1 Controls R1
- Zone2 Controls R2
- Zone3 Controls R3
- Group 1 in each zone Type 1 CO, Voting mode, Quorum = 1
- Group 2 in each zone Type 2 NO_2, Voting mode, Quorum = 1

Description	Carbon Monoxide	Nitrogen Dioxide
Type	CO	NO_2
Range	200 ppm	20 ppm
Alarm Level	200 ppm	5 ppm
Warning Level	100 ppm	3 ppm
Rising Level	35 ppm	2.5 ppm
Falling Level	15 ppm	1.2 ppm

Table B-1 Default settings

Typical coverage for CO, and NO_2 sensors is 5,000 sq. ft. (464.5 sq. m) (see the User Instructions for each sensor type for location and coverage details). Extra sensors may be needed near areas where people work, such as toll booths. Macurco provides only the control panels and sensors. Fans, relays, and other devices are provided by the contractor. See the appropriate building code for the size of fans and air changes per unit of time.

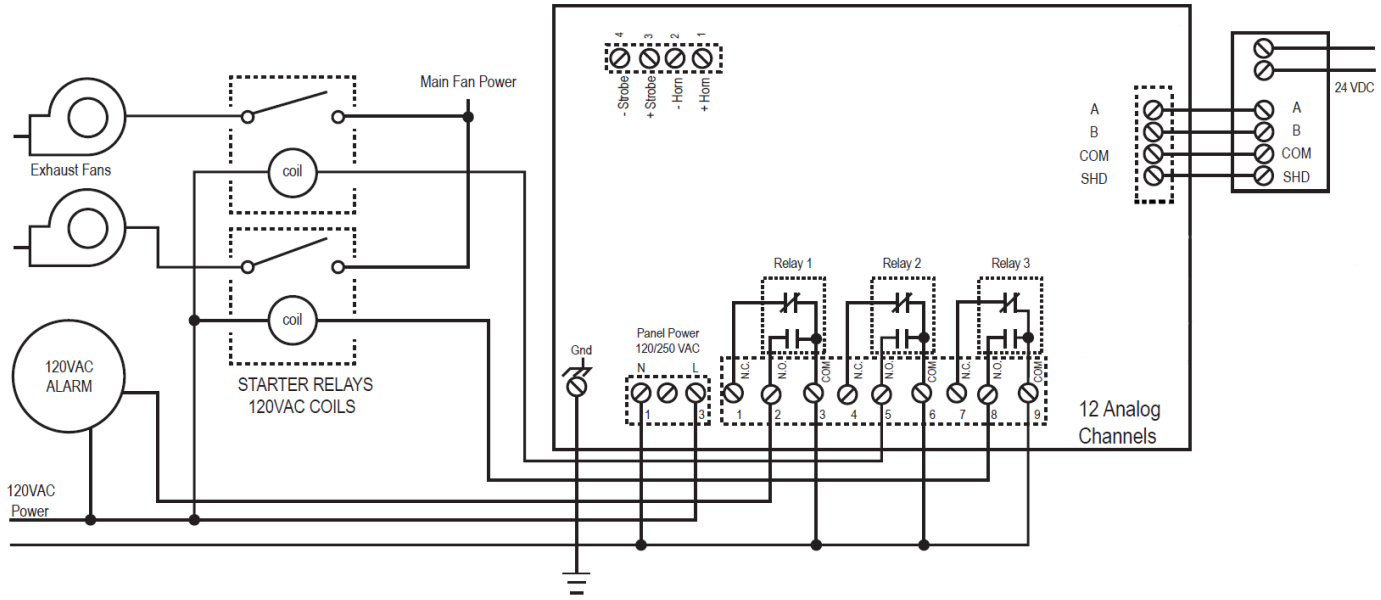

www.macurco.com 1-844-325-3050 support@macurco.com 3601 N St. Paul Ave Sioux Falls, SD 57104

Figure B-1 System Wiring Diagram

Setting the System Configuration

The configuration menus can be entered from normal mode by pressing the MENU key. While in configuration mode, the user can review all configuration parameters to check the current operating conditions.

```
5  SENSORS  FOUND
3  RELAYS  FOUND
```

Figure B-2 Hardware Summary

The MENU key is also used to return to a higher-level menu, exit the configuration menus and finally return to normal mode.

Figure B-3 Keypad Layout

When exiting from the menu system to normal mode, if any configuration changes have been made, the panel will ask whether changes are to be saved.

```
Save Config.?
(0=NO, 1=YES)
```

Figure B-4 Save Configuration? Prompt

Pressing the zero (0) key at this point will cancel all changes except time and day of the week. Pressing the one (1) key will save all changes to memory, and the changes will then become immediately effective in controlling the ventilation system.

The numeric keys are used to change the particular parameter displayed. The underlined numeral, or space, on each display, indicates what will be changed by the numeric keys. The left and right arrow keys will enter the particular submenu and scroll through the items of the same type where appropriate, (e.g., enter the Configure Sensors submenu) and scroll through the parameter lists for the existing sensors. The up-arrow key scrolls through the menu entries in the order listed here, while the down arrow key scrolls in the reverse order.

Changing the configuration parameters requires the entry of a password before changes can be made. The default password is 1234.

In many cases, the parameter is entered as a string of numerals, but some parameters are selected by pressing a single key, e.g. pressing 1 selects Monday, 2 selects Tuesday, etc.

www.macurco.com 1-844-325-3050 support@macurco.com 3601 N St. Paul Ave Sioux Falls, SD 57104

9.1 Configure System Submenu

9.1.1 Set Time of Day

The system configuration submenu provides entries to:

1. Set the time of day, 24-hour format
2. Set the day of the week, day 1 is Monday
3. Load Default Configuration
4. Change Password

```
Time:  22:55
Day:Tuesday
```

Figure B-5 Set Time of Day

This display example shows that the time is 22:55 (10:55 PM). The underlined numerals indicate that the numeric keys can be used to set the current time of day. When the first numeral is entered (and after the password is entered if required), the display will change to show that the hour portion of the time is currently being entered.

Note that the time is saved as soon as the fourth numeral is entered.

9.1.2 Set Day of Week

```
Time:  22:55
Day:2  Tuesday
```

Figure B-6 Set Day of the Week

This display example shows that Tuesday is the current day of the week. The underlined numeral indicates that the day can be changed by entering the corresponding numeral: 1 Monday, 2 Tuesday, 3 Wednesday, 4 Thursday, 5 Friday, 6 Saturday, 7 Sunday

9.1.3 Load Default Configuration

```
1  Load Default
   Configuration
```

Figure B-7 Load Default Configuration

When the one (1) numeral is pressed, the panel will prompt for the password, even if it has been entered previously. If the password is entered correctly, the panel will overwrite the existing configuration with the default configuration. This operation is intended to restore the panel to a known basic condition if it is removed from one installation and installed in another.

9.1.4 Change Password

```
Change Password
          * * * *
```

Figure B-8 Change Password

When the first digit is entered to change the password, the panel will prompt for the existing password to be entered (if it hasn't already been entered), see section 9.1.5 Enter Password for more detail.

Once the current password has been entered, the panel will prompt for the new password.

www.macurco.com 1-844-325-3050 support@macurco.com 3601 N St. Paul Ave Sioux Falls, SD 57104

9.1.5 Enter Password

If the password has not yet been entered, then when the first digit of any parameter is entered the panel will prompt for the current password. Note that the first digit entered is discarded; it does not count toward the password or toward the parameter entry.

```
Enter Password
_ _ _ _
```

Figure B-9 Enter Password

If the password is not entered correctly the panel will display as follows:

```
Wrong Password
```

Figure B-10 Wrong Password Prompt

Once the current password has been entered, the panel will prompt for the configuration parameter being changed.

If the password has been lost:

→ Power down the DVP-120
→ Remove the Jumper Shorting Connector from the EXT header and place the Jumper Shorting Connector onto the top two pins of the SYS header.
→ Power up the DVP-120. The first display is the current password on the unit.
→ Remove the Jumper Shorting Connector from the SYS header and install back onto the two bottom pins of the EXT header.

9.2 Configure Sensors Submenu

9.2.1 See section 4.2 Initial Operating Mode for more detail

9.2.2 See section 4.3 User Interface for more detail

9.2.3 See section 4.13 System Configuration for more detail

9.2.4 See section 4.13.3 Configure Sensors Submenu for more detail

Press Menu to display Hardware Summary

↑ x 2 Configure Sensors

- Sensor

```
SensoR 01      CO
A: 200   W:   50
```

Figure B-11 Sensor Summary

↑ Sensor type (set sensor type)

1=CO, 2=NO2, 3=EX, 4=NH3, 5=H2S, 6=REF, 7=CO2, 8=O2 and 0=None

```
Sensor 01      CO
Type: 1
```


www.macurco.com 1-844-325-3050 support@macurco.com 3601 N St. Paul Ave Sioux Falls, SD 57104

Figure B-12 Sensor Type

↑ Alarm Level - set level if needed, 0 = disable

```
Sensor 01      CO
Alarm:       200ppm
```

Figure B-13 Sensor Alarm Level

↑ Warning Level - set level if needed

```
Sensor 01      CO
WarninG:     _50ppm
```

Figure B-14 Sensor Warning Level

↑ Sensor Range - default range is in system

```
Sensor 01      CO
Range:       200ppm
```

Figure B-15 Sensor Range

↑ Next Sensor - complete for all sensor channels

9.3 Configure Relays, Horn & Strobe Submenu

9.3.1 See section 4.13.4 Configure Relays, Horn & Strobe Submenu for more detail

Press Menu to display Hardware Summary
↑ x 3 Configure Relays
→ Relay 1

```
Relay 1 Norm.Off
Delay ON,Min.On
```

Figure B-16 Relay Summary

Default – Normally Off

```
Relay 1 Norm.Off
Mode: 2
```

Figure B-17 Relay Mode

Default - Delay – 1 Minute

```
Relay 1 Delay On
(mm:ss) 01:00
```

Figure B-18 Turn on Delay

Default - Minimum Runtime - 1 Minute

```
Relay 1     Min.On
```


www.macurco.com 1-844-325-3050 support@macurco.com 3601 N St. Paul Ave Sioux Falls, SD 57104

```
(mm:ss)  01:00
```

Figure B-19 Minimum on Time

→ Relay 2 - repeat for all relays, horn, and strobe

9.4 Configure Zones Submenu

9.4.1 See section 4.13.7 Configure Zones Submenu for more detail

Definitions:

Zone – Defines Sensor Input & Relay / Alarm Output
Group – Set of Sensors of the same type and output within the same zone
Average – Activation based upon an average of sensors in a group
Voting – Number of sensors needed to be above trip point to activate the output
Quorum – Number of sensors need to vote, 1 = any sensor

Press Menu to display Hardware Summary

↑ x 4 Configure Zones
→ Zone 1 Controls
R_ R_ R_ H_ S_
Enter (underlined) number of output for zone
R = Relay (1, 2 and 3), H = Horn (4), S = Strobe (5)

```
Zone 1 Controls
R1  R2  R3  H4  S5
```

Figure B-20 Zone Controls

↑ Configure Group 1
Sensor type - enter #
1=CO, 2=NO2, 3=Combustible, 0=None

```
Z1 Group 1     NO2
Sensor Type: 2
```

Figure B-21 Zone Controls

↑ Sensor Number - enter a two-digit number for each sensor to be included in the group (e.g., 01, 02, 03…12.) from 01 through 12.

```
Z1 Group 1     NO2
Sensors: 02, 04, 11
```

Figure B-22 Sensor Selection

↑ Rising (activation) Trip point

```
Z1 Group 1     NO2
Rising:      2.5ppm
```


www.macurco.com 1-844-325-3050 support@macurco.com 3601 N St. Paul Ave Sioux Falls, SD 57104

Figure A-23 Rising Trip Point Entry

The default rising trip points are:

Description	Carbon Monoxide	Nitrogen Dioxide
Type	CO	NO_2
Rising Level	35 ppm	2.5 ppm

Table B-2 Default Raising trip points

↑ Falling (off) Trip point

```
Z1 Group 1     NO2
Falling:   1.0ppm
```

Figure B-24 Falling Trip Point Entry

↑ Average or Voting Mode

```
Z1 Group 1     NO2
Mode:  2   Voting
```

Figure B-25 Sensor Mode Selection

→ Configure Group 2 - repeat for up to three groups

When multiple sensors are being monitored as a Group, the DVP-120 output can be based on either sensor Voting (default) or the Average of all sensor readings in the Group.

When the configuration is Average, the gas concentrations from all sensors in the Group are averaged.

- If the average is greater than or equal to the rising trip point, the zone outputs are activated.
- If the average is less than or equal to the falling trip point, the zone output(s) is de-activated.
- If the average is between the two trip points, the outputs remain in their previous state.

When the configuration is Voting, the number of sensors in the Group indicating a value greater than or equal to the rising trip point is counted.

- If the count is greater than or equal to the Quorum (the minimum number of sensor votes in a Group needed) then the zone output(s) are activated.
- If the count of sensors indicating less than or equal to the falling trip point is greater than or equal to the Quorum the zone output(s) is de-activated.
- If a group has an equal number of sensors with gas readings greater than or equal the rising trip point and sensors with readings less than or equal to the falling trip point, activating the output(s) is given priority.

It is up to the installer to ensure that the Quorum entry is appropriate for the configuration. Valid entries are from one to twelve, but a value greater than the number of sensors being monitored by the group stops the group from controlling the outputs. The default Quorum value is 1**; in this case, only 1 sensor vote is needed to control the output.**

www.macurco.com 1-844-325-3050 support@macurco.com 3601 N St. Paul Ave Sioux Falls, SD 57104

9.5 Configure Signals Submenu

9.5.1 See section 4.13.8 Configure Signals Submenu for more detail

Press Menu to display Hardware Summary
↑ x5 Configure Signals
→Alarm Signals

```
Alarm Signals
Buzz,Horn,Strobe
```

Figure B-26 Alarm Signals

↑ Alarm Signal Buzzer (default 2 – Intermittent)
↑ Alarm Signal Horn (default 2 – Intermittent)
↑ Alarm Signal Strobe (default 1 – Continuous)

```
Alarm Signals
Buzz:2  Intermit.
```

Figure B-27 Buzzer Alarm Signal

↑ Warning Signals

```
Warning Signals
Horn:5          OFF
```

Figure B-28 Horn Warning Signal

↑ Warn Signal Buzzer (default 5 – Off)
↑ Warn Signal Horn (default 5 – Off)
↑ Warn Signal Strobe (default 5 – Off)

→Trouble Signals

```
Trouble Signals
Buzz:4        Triple
```

Figure B-29 Buzzer Trouble Signal

↑ Trouble Signal Buzzer (default 4 – Triple Tap)
↑ Trouble Signal Horn (default 5 – Off)
↑Trouble Signal Strobe (default 5 – Off)

www.macurco.com 1-844-325-3050 support@macurco.com 3601 N St. Paul Ave Sioux Falls, SD 57104

10 Appendix C – Setup Record

Record network parameters and keep in a safe place to assist with installation and future troubleshooting will be simplified.

Date of Install: _____ Serial Number: _____

Location of Install: _____ Installed by: _____

Detectors / Sensors: Under Detector type record gas type (e.g. TX-6-ND, CM-6) Note that CX-6 uses two addresses, one for each gas type.

Modbus Address	Detector Type	Location		Modbus Address	Detector Type	Location		Modbus Address	Detector Type	Location	
1				34				67			
2				35				68			
3				36				69			
4				37				70			
5				38				71			
6				39				72			
7				40				73			
8				41				74			
9				42				75			
10				43				76			
11				44				77			
12				45				78			
13				46				79			
14				47				80			
15				48				81			
16				49				82			
17				50				83			
18				51				84			
19				52				85			
20				53				86			
21				54				87			
22				55				88			
23				56				89			
24				57				90			
25				58				91			
26				59				92			
27				60				93			
28				61				94			
29				62				95			
30				63				96			
31				64				97			
32				65				98			
33				66				99			

Relay connection	Connected device	Zone Configured	Delay	Runtime
Relay 1				
Relay 2				
Relay 3				
Horn 4				
Strobe 5				

Notes:

www.macurco.com 1-844-325-3050 support@macurco.com 3601 N St. Paul Ave Sioux Falls, SD 57104

11 Appendix D – DVP-120 Quick Start Guide

Quick Start Guide for Adding Sensor to Zone: DVP-120 with 3 CO and 3 NO2 Detectors

Adding CO Sensors To A Zone:

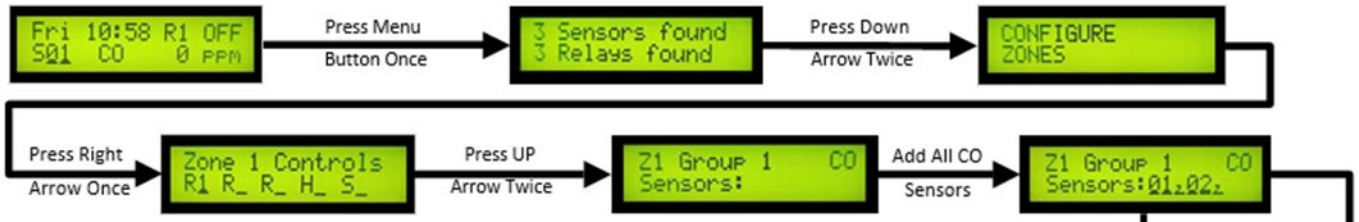

Adding NO_2 Sensors To A Zone:

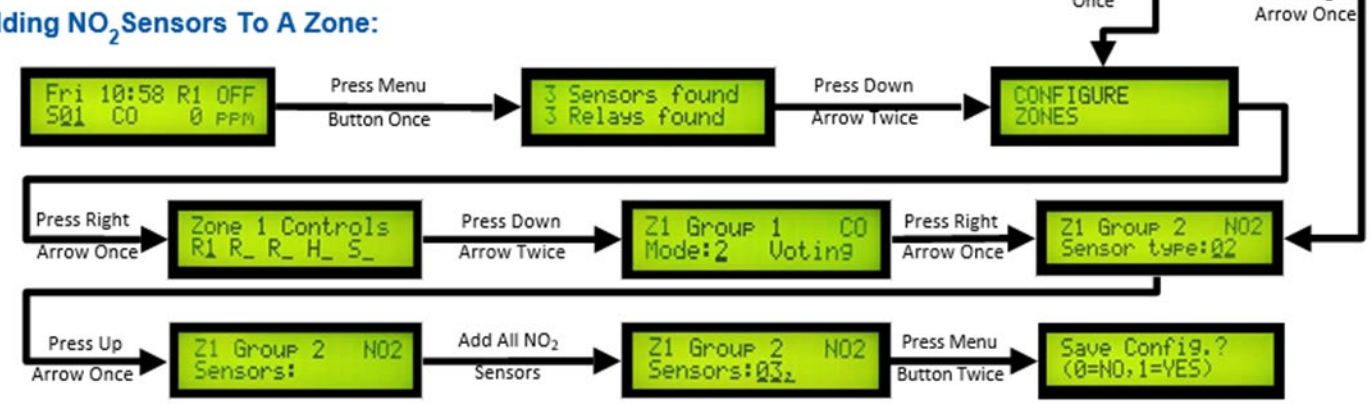

Remove the Startup Delay on Relays:

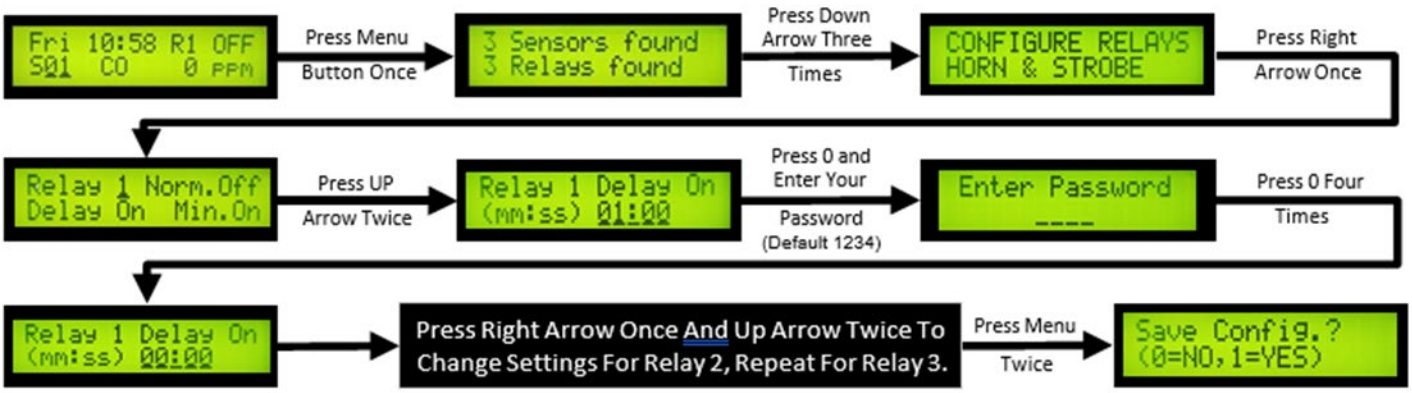

Run 420mA Current Loop Test:

www.macurco.com 1-844-325-3050 support@macurco.com 3601 N St. Paul Ave
Sioux Falls, SD 57104

www.macurco.com 1-844-325-3050 support@macurco.com 3601 N St. Paul Ave
Sioux Falls, SD 57104

www.macurco.com 1-844-325-3050 support@macurco.com 3601 N St. Paul Ave
Sioux Falls, SD 57104

12 Macurco Gas Detection Product limited warranty

Macurco warrants the DVP-120C gas detector will be free from defective materials and workmanship for a period of two (2) years from the date of manufacture (indicated on inside cover of the DVP-120), provided it is maintained and used in accordance with Macurco instructions and/or recommendations. If any component becomes defective during the warranty period, it will be replaced or repaired free of charge, if the unit is returned in accordance with the instructions below. This warranty does not apply to units that have been altered or had repair attempted, or that have been subjected to abuse, accidental or otherwise. The above warranty is in lieu of all other express warranties, obligations or liabilities. THE IMPLIED WARRANTIES OF MERCHANTABILITY AND FITNESS FOR PARTICULAR PURPOSE ARE LIMITED TO A PERIOD OF TWO (2) YEARS FROM THE PURCHASE DATE. Macurco shall not be liable for any incidental or consequential damages for breach of this or any other warranty, express or implied, arising out of or related to the use of said gas detector. The manufacturer or its agent's liability shall be limited to replacement or repair as set forth above. Buyer's sole and exclusive remedies are the return of the goods and repayment of the price, or repair and replacement of non-conforming goods or parts.

*Modbus is a trademark or registered trademark of Schneider Automation Inc.
*BACnet is a registered trademark of ASHRAE.

Macurco Gas Detection

3601 N. St. Paul Avenue
Sioux Falls, SD 57104

Technical Support Contact Information

Phone: 1-844-325-3050
Fax: 1-605-951-9616
Email: support@macurco.com
Website: www.support.macurco.com

General Contact Information

Phone : 1-877-367-7891
Fax : 1-605-951-9616
Email : info@macurco.com
Website: www.macurco.com

Rev – 1.0
Issue Date: 02-26-2019
Document No: 34-8708-4770-8
© Aerionics 2018. All rights reserved.
Macurco is a trademark of Aerionics, Inc.

www.macurco.com 1-844-325-3050 support@macurco.com 3601 N St. Paul Ave Sioux Falls, SD 57104