EN

TECHNICAL MANUAL

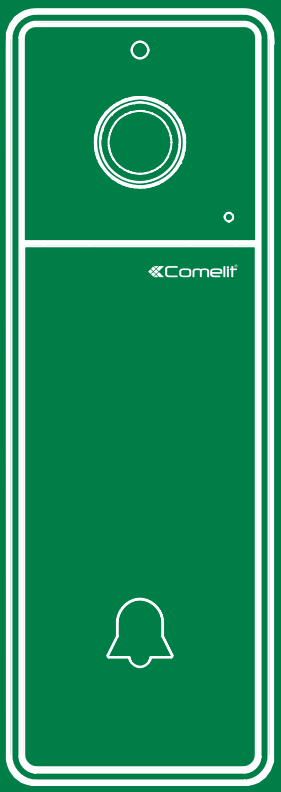

Visto ViP WiFi

Art. VS8111

Comelit®
Passion. Technology. Design.

Warning

This Comelit product was designed for use in the creation of audio and video communication systems in residential, commercial or industrial settings and in public buildings or buildings used by the public.

- Disconnect the power supply before carrying out any operations on the wiring.
- Use wires with a cross-section suited to the distances involved, observing the instructions provided in the system manual.
- We advise against running the system wires through the same duct as the power cables (110V or 230V or higher).

To ensure Comelit products are used safely:

1. carefully observe the indications provided in the manuals
2. make sure the system created using Comelit products has not been tampered with / damaged.

- Comelit products do not require maintenance aside from routine cleaning, which should be carried out in accordance with the indications provided in the manuals / instruction sheets.
- Comelit Group S.p.A. does not assume any responsibility for
  1. any usage other than the intended use
  2. non-observance of the indications and warnings contained in this manual / instruction sheet.

  Comelit Group S.p.A. nonetheless reserves the right to change the information provided in this manual / instruction sheet at any time and without prior notice
- The brands and commercial names appearing in this publication remain the property of their respective owners.
- The Wi-Fi and 433.92 MHZ radio frequency signal on Visto ViP WiFi are two independent signals and works independently.
- The Comelit application is available on App Store and Google Play and is supported by devices with iOS 10 (or later) and by the most common Android devices with Android version 4.4 or higher, however some functionalities may be limited depending on the model and the version.

Table of contents

Visto ViP WiFi 3
- **Box contents** 3
- **Technical characteristics** 3
- **Description** 4
- **Installation** 4
- **Surface mounting** 5
- **Guide to LED readings** 5
- **Maximum connection distances** 5

Adapter 3522 6
- **Maximum connection distances** 6

Wiring diagrams 7

Comelit App 11

Reset procedures 13
- **Reset Wi-Fi parameters** 13
- **New Wi-Fi parameters** 13
- **Restore factory parameters** 14

Visto ViP WiFi

Visto ViP WiFi is a Wi-Fi external video entry unit for use in Comelit ViP systems.

Depending on the system configuration, Visto ViP WiFi makes it possible to receive video entry calls on ViP monitors or directly on smartphones and tablets, via the Comelit app.

Box contents

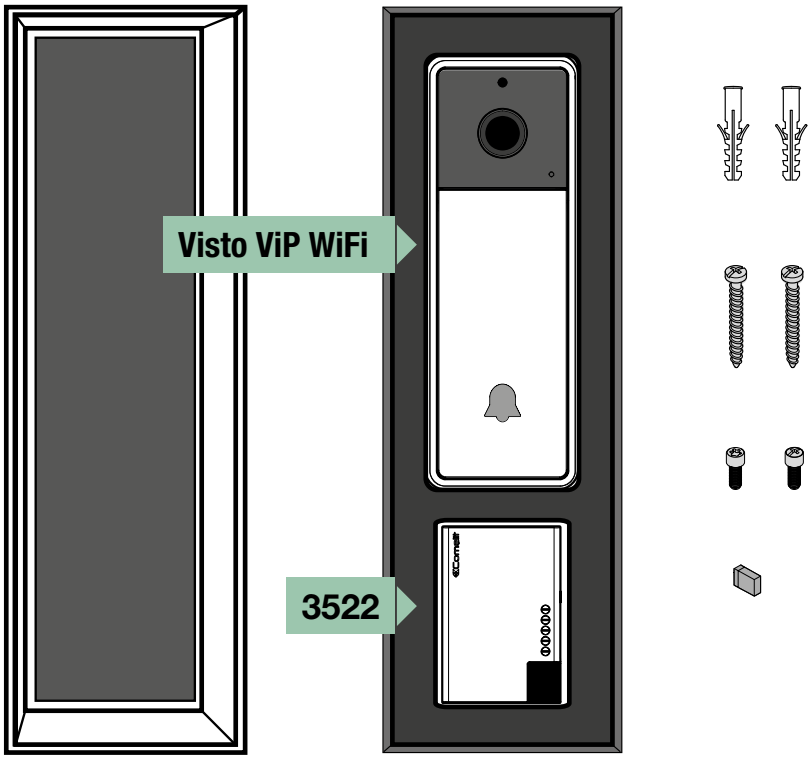

Technical characteristics

Type	Single-piece entrance panel
Product height (mm)	136
Product width (mm)	47
Product depth (mm)	28-32
Product colour	Dark graphite RAL9011
Material	Plastic
Surface-mounted	✓
Call button	1
Indicator LED	✓
Audio/video systems	✓
Audio type	Two-way, Full-Duplex Echo canceller, Noise canceller
Camera	Colour
Camera sensor	1/4" CMOS

Diagonal angle of view (°)	170
Minimum colour lighting (lux)	2
Minimum B/W lighting (lux - IR LED ON)	0
Lens size (mm)	1.6
Video encoding	H.264
Video resolution (H x V)	Max. 1280 x 720
Operating temperature (°C)	-25 to +55
Operating humidity Max RH (%)	0 to 75
IP protection rating	IP54
Power supply	12 to 33 VDC
Max. absorption (W)	6
Lock-release relay contact	1A (30 VDC)
Remote control via mobile device	Comelit app

Description

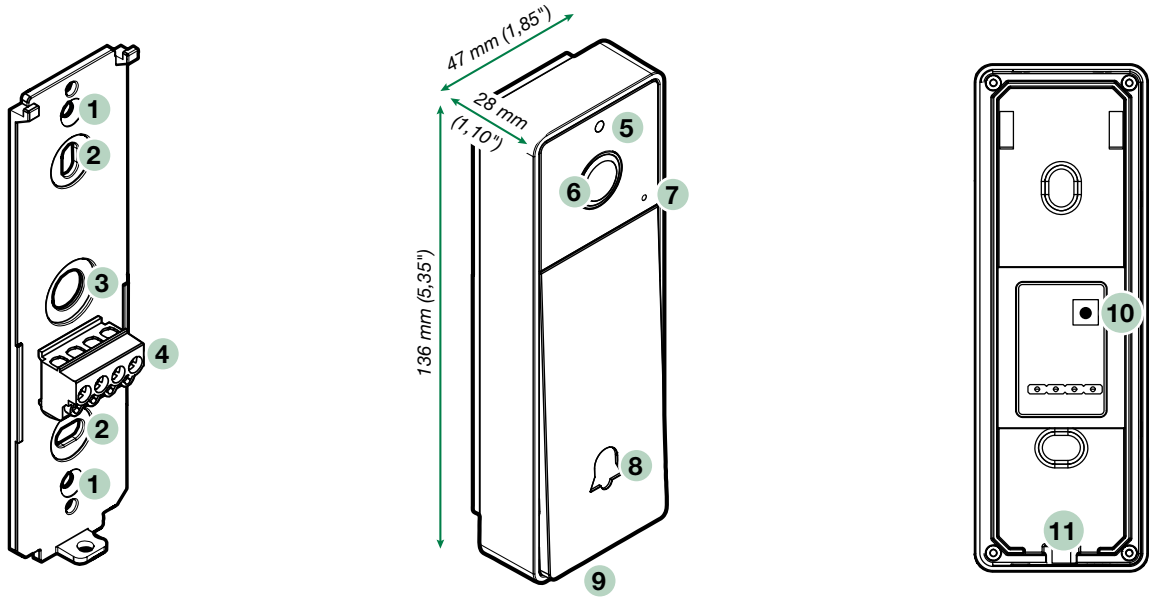

1. Used to secure accessories ** art. 3525, art. 3526 with the screws supplied
2. Used for surface mounting with the screws supplied
3. Cable route
4. **Terminal**
   - **+ -** *Visto ViP WiFi power supply*
   - **NO** *Relay normally open contact*
   - **COM** *Relay common contact*
5. Light sensor
6. Wide-angle colour camera
7. Microphone
8. Call button / Indicator LED
9. Loudspeaker
10. Reset button (see page 13)
11. Lock screw

** Adjustable supports of Visto ViP WiFi (available to purchase separately)

Installation

Warning

We recommend installing Visto ViP WiFi near the router. Always check the quality of the Wi-Fi signal before final installation of the product. A Wi-Fi signal that is too weak may compromise its operation.

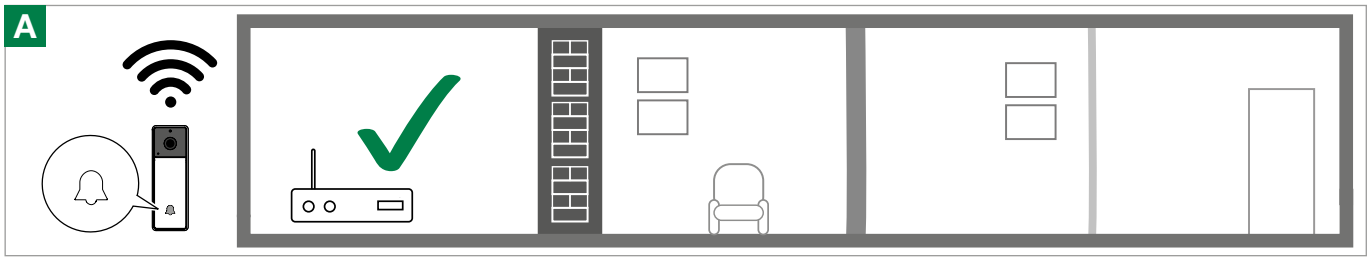

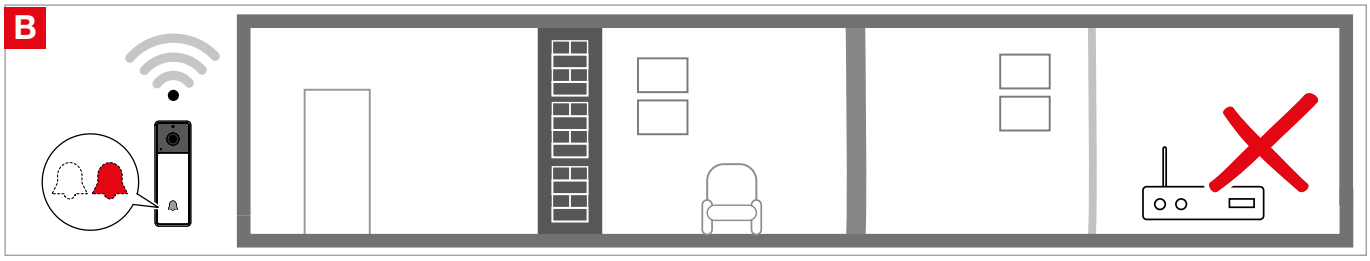

Surface mounting

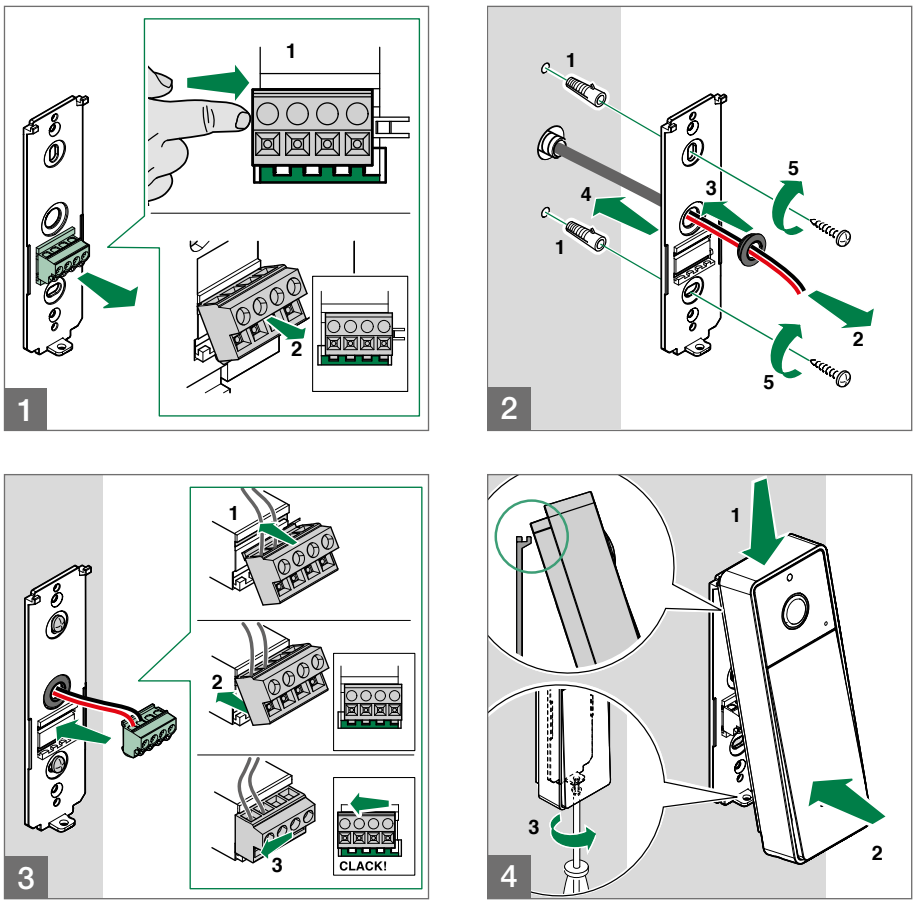

Guide to LED readings

Start	Wi-Fi not available	In communication
Door opening confirmation	Standby	No Wi-Fi configuration available
Weak Wi-Fi signal	Call in progress	Awaiting configuration QR code

Maximum connection distances

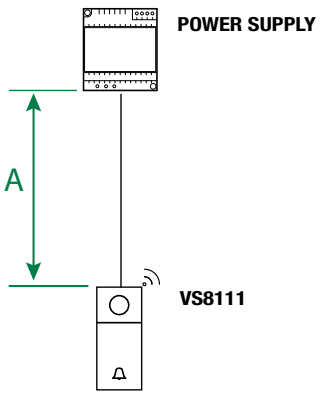

24 VDC	A max.
UTP5 cat. 5 0.2 mm² (Ø 0.5 mm AWG 24)	100 m *328 feet*
0.5 mm² (Ø 0.8 mm AWG 20)	200 m *656 feet*
1 mm² (Ø 1.2 mm AWG 17)	240 m *787 feet*

Adapter 3522

Adapter 3522 is only required in systems where a power supply unit with 12 - 20 VAC output is already installed, and if you want to make use of a mechanical or electronic bell already fitted in the system.

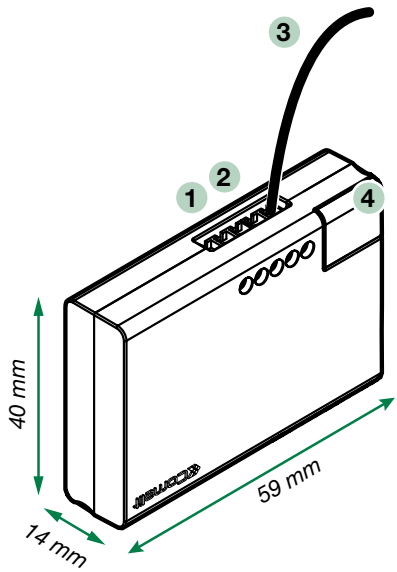

1. ~ **T** — 12 - 20 VAC power supply input from transformer
2. **+ -** — Power supply output for Visto ViP Wi-Fi
3. **F / R** — Front/Rear cable for connection to the bell (if necessary)
4. **Jumper** — to select the type of additional bell (if fitted in the system and connected to the F/R cable)

(Default) For MECHANICAL bell

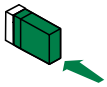

If the existing bell is ELECTRONIC and it requires a DIODE WIRED IN PARALLEL TO THE BUTTON, then install the jumper.

Maximum connection distances

For Wi-Fi signal limits, please refer to the warning on page 4.

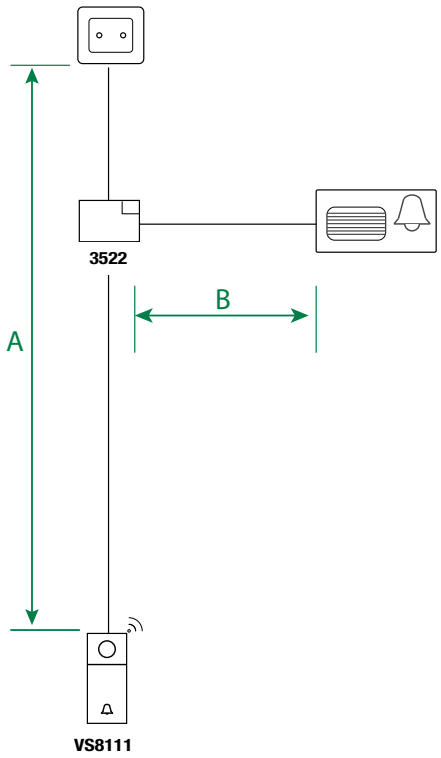

12 VAC	A max.	B max.
UTP5 cat. 5 0.2 mm² (Ø 0.5 mm AWG 24)	40 m *131 feet*	25 m *82 feet*
0.5 mm² (Ø 0.8 mm AWG 20)	90 m *295 feet*	
1 mm² (Ø 1.2 mm AWG 17)	165 m *541 feet*	
16 VAC	**A max.**	**B max.**
UTP5 cat. 5 0.2 mm² (Ø 0.5 mm AWG 24)	100 m *328 feet*	25 m *82 feet*
0.5 mm² (Ø 0.8 mm AWG 20)	200 m *656 feet*	
1 mm² (Ø 1.2 mm AWG 17)	240 m *787 feet*	
20 VAC	**A max.**	**B max.**
UTP5 cat. 5 0.2 mm² (Ø 0.5 mm AWG 24)	190 m *628 feet*	25 m *82 feet*
0.5 mm² (Ø 0.8 mm AWG 20)	350 m *1,148 feet*	
1 mm² (Ø 1.2 mm AWG 17)	390 m *1,279 feet*	

Wiring diagrams

Make sure the transformer used has the same technical specifications as required to power the devices (VS8111 and chime).

(A) Using art. VS8111 to transmit calls to ViP devices for the apartment

Case 1

Visto ViP WiFi, connected to the Wi-Fi network for the *building* and used as a secondary external station in an existing ViP system, transmits video entry calls to the monitor or other devices in the ViP system for the apartment.

Configuration procedure via Comelit app on page 11

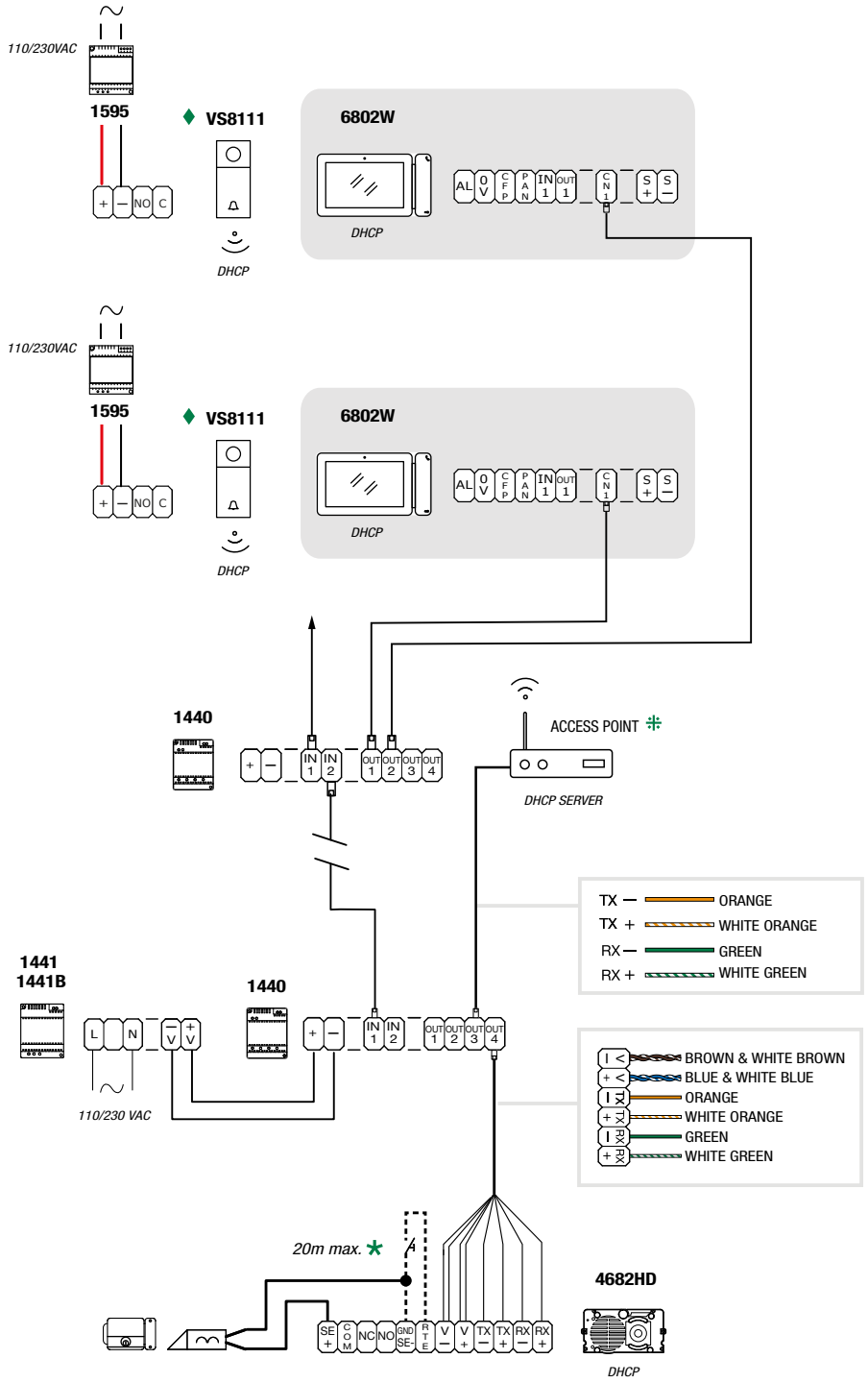

Caution! VS8111 devices in the same IP category must have a different ViP address! (Page 11 - Point 6)

The Wi-Fi network and LAN belong to the same IP category (e.g. 192.168.1.x)

Local door-opener button

Case 2

Visto ViP WiFi, connected to the Wi-Fi network for the *apartment* and used as a secondary external station in an existing ViP system, transmits video entry calls to the Wi-Fi monitor or other devices in the ViP system for the apartment that in turn forward the call to the Comelit app.

Configuration procedure via Comelit app on page 11

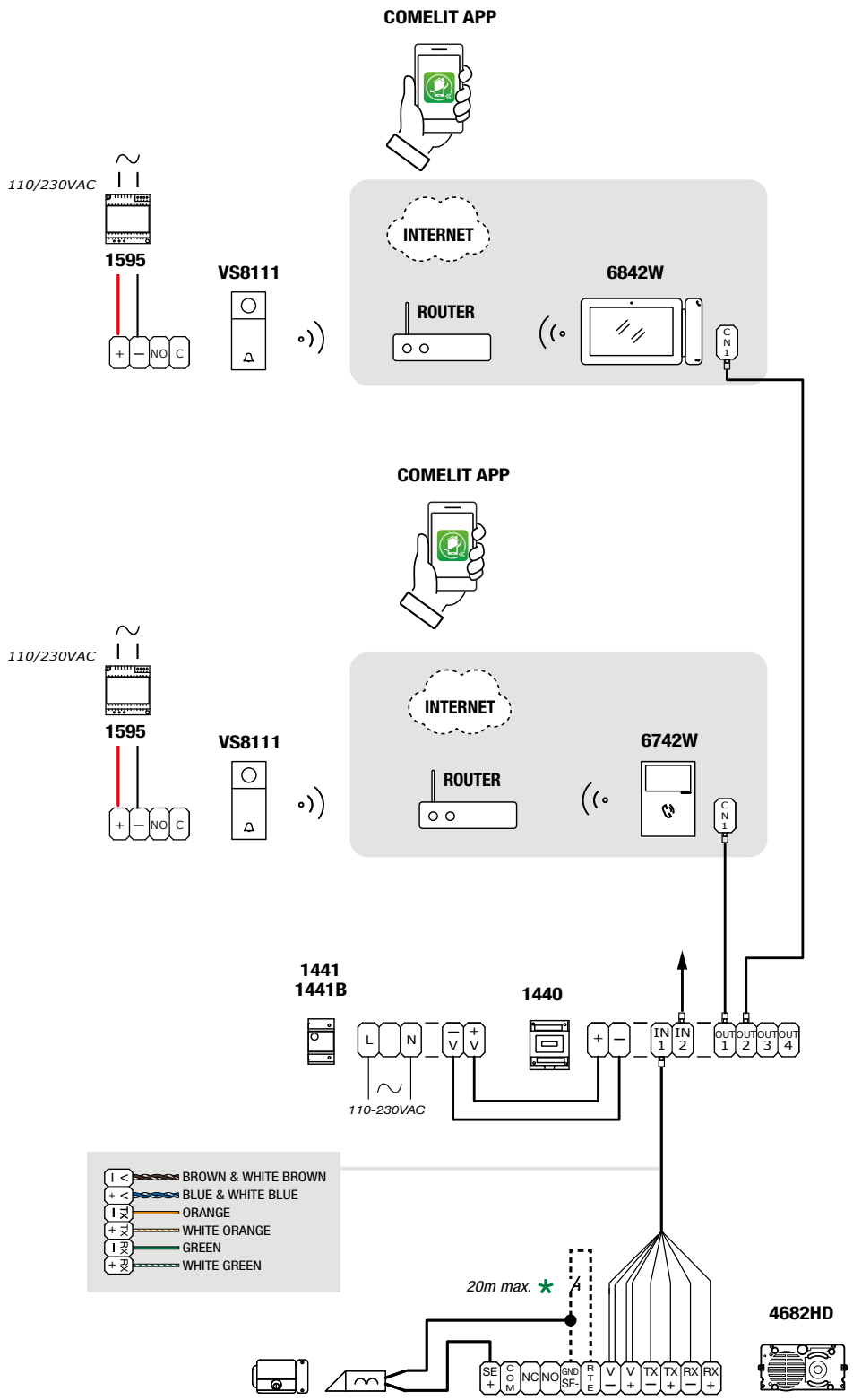

* Local door-opener button.

(B) Using art. VS8111 to transmit calls to the Comelit app

Visto ViP WiFi, connected to the Wi-Fi network for the apartment, is used as an independent solution and forwards video entry calls directly to the Comelit app.

Configuration procedure via Comelit app on page 12

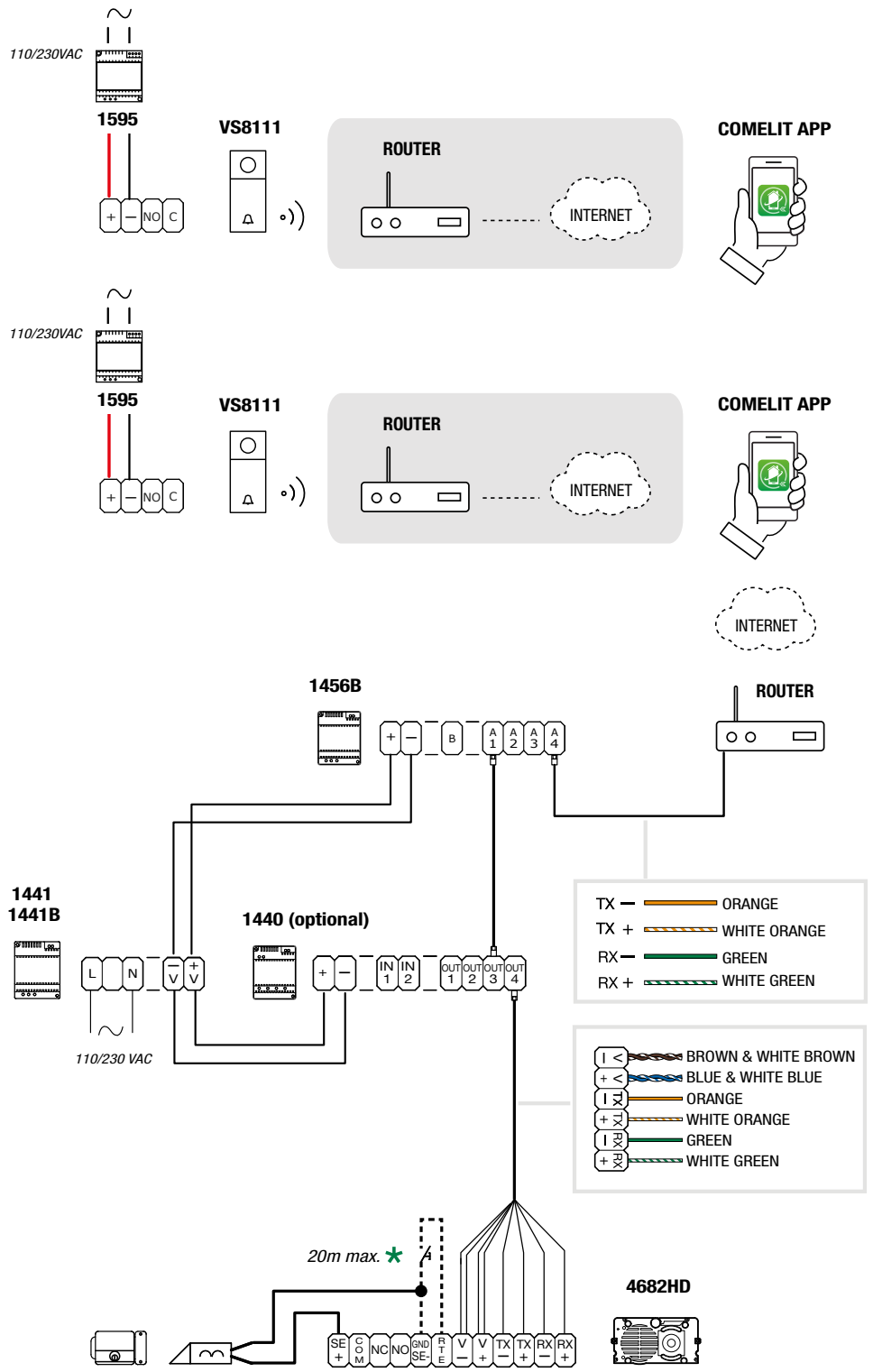

* Local door-opener button.

Variant with power supplied by art. 3534

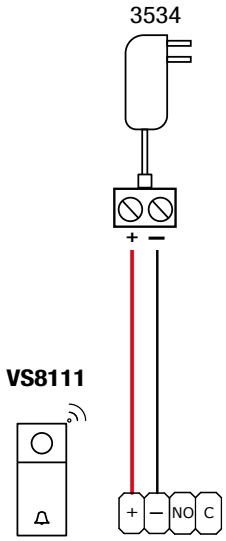

Variant with power supplied by art. 3522

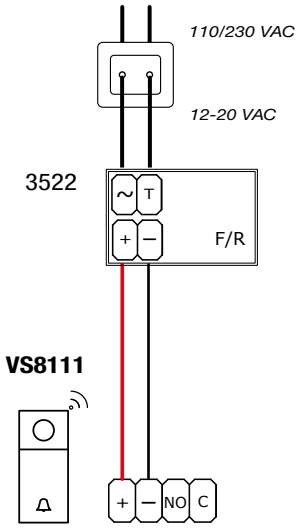

Variant for electric door lock and/or wireless bell 3532 *(Optional)*

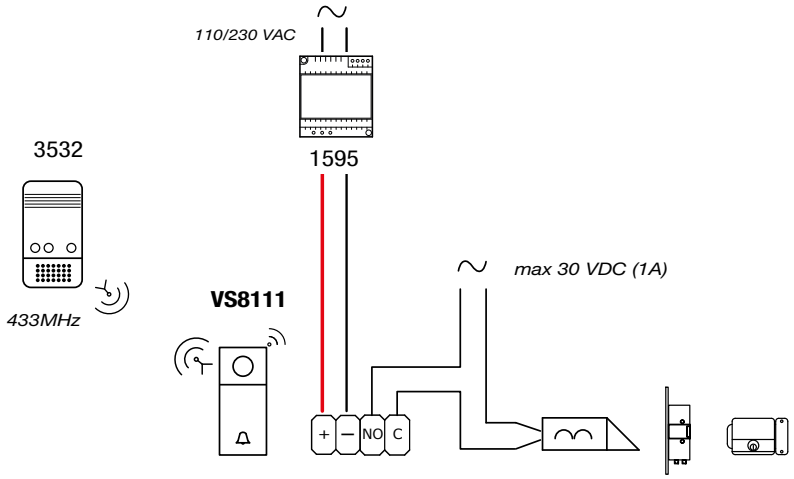

Variant for using an existing bell in alternating current

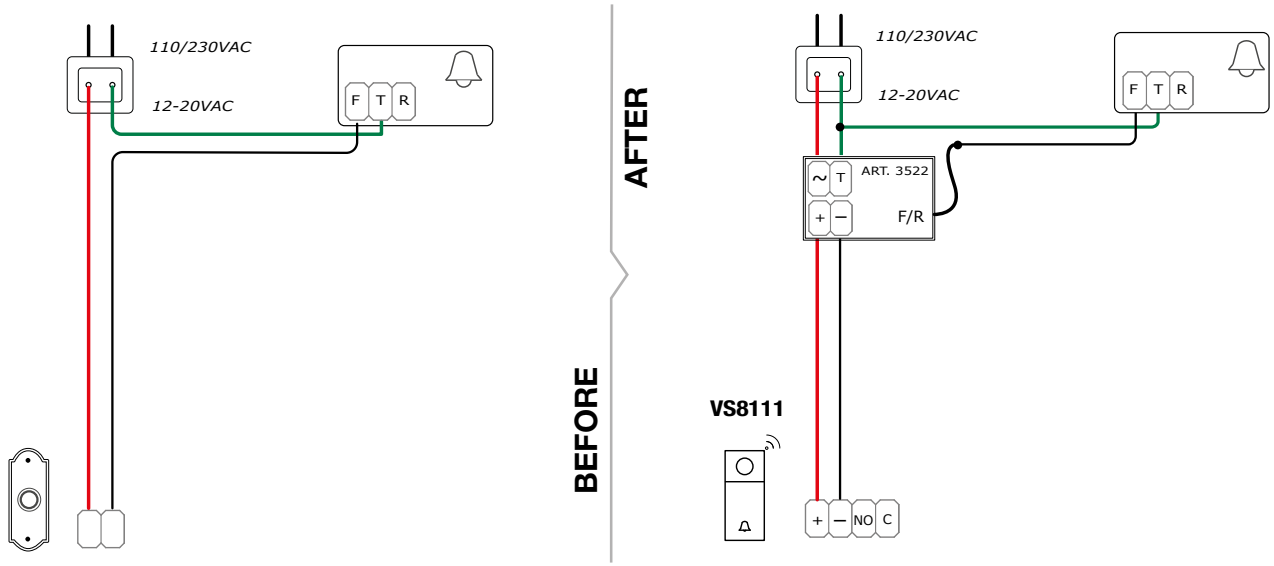

Comelit App

Once the download from the relevant store has been completed and installed, the COMELIT app allows you to connect art. VS8111 to the ViP system or configure it to transmit calls directly to smartphones and tablets.

Depending on your system, you need to carry out one of the 2 procedures detailed below (A or B):

(A) Configuration procedure for transmitting calls to ViP devices for the apartment

Applies to systems on page 7 - 8

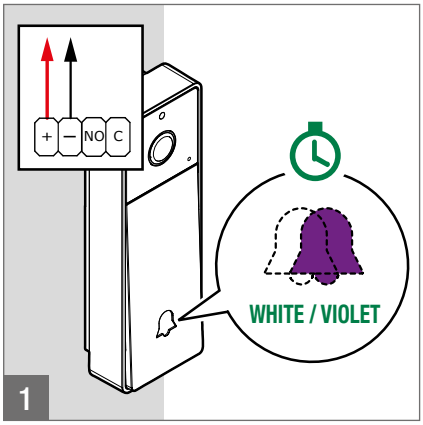

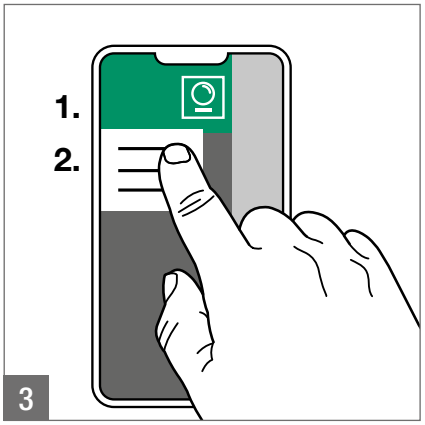

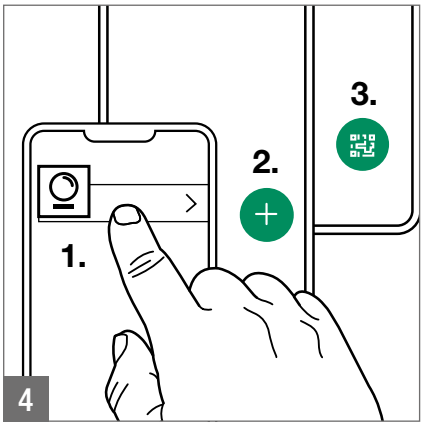

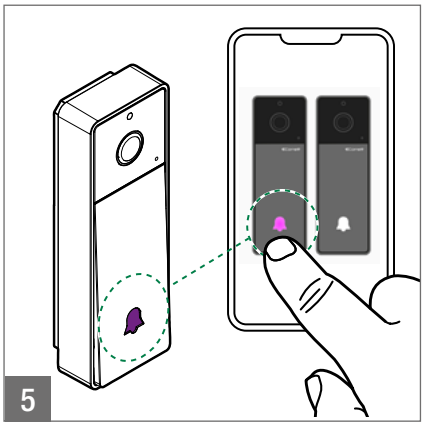

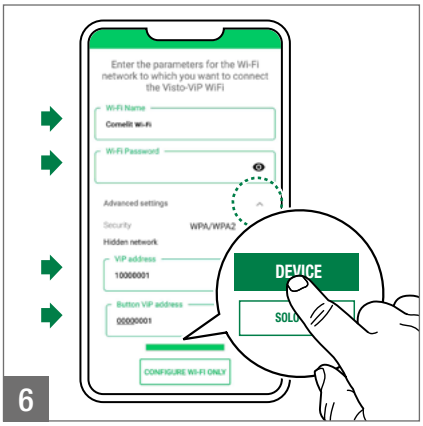

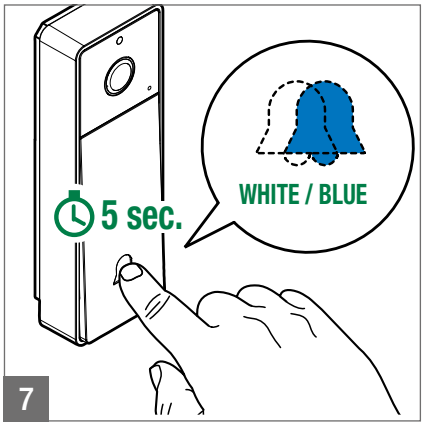

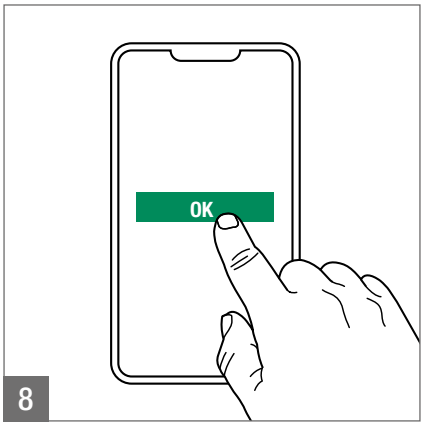

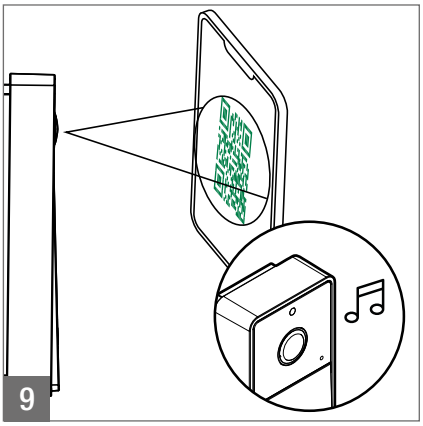

(B) Configuration procedure for transmitting calls to the Comelit app

Applies to systems on page 9

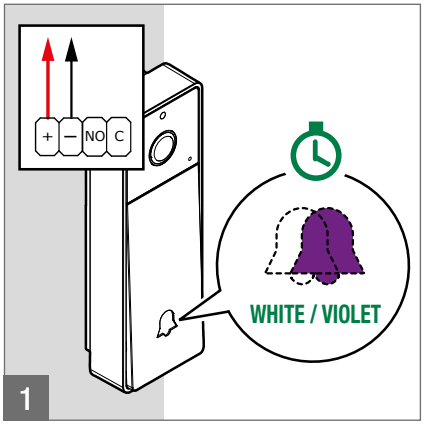

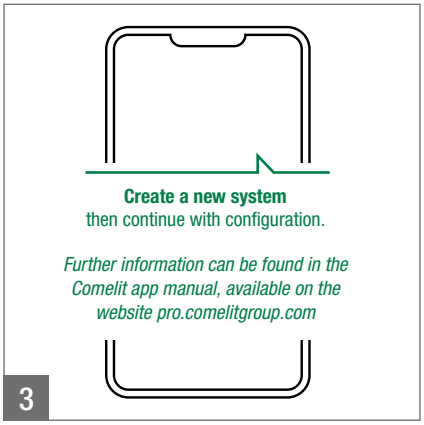

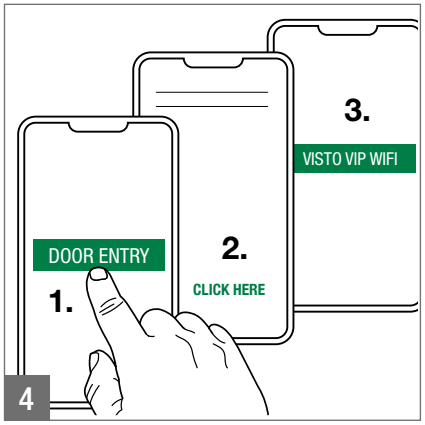

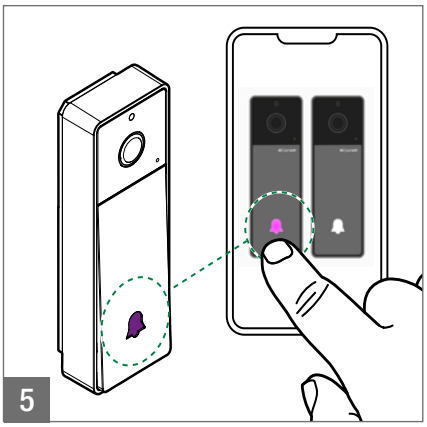

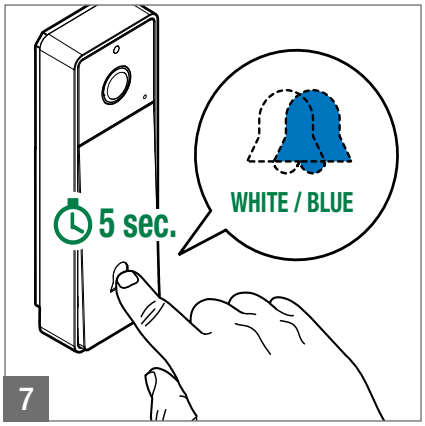

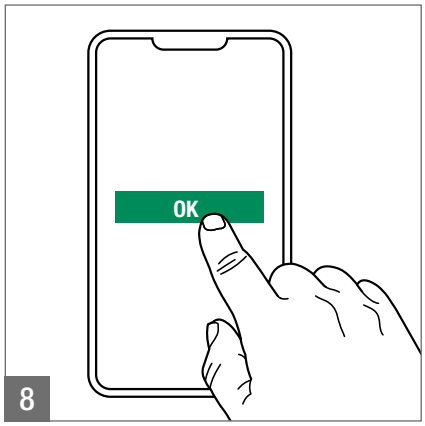

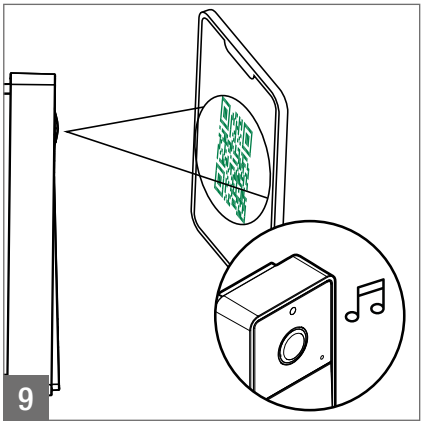

Reset procedures

Reset Wi-Fi parameters

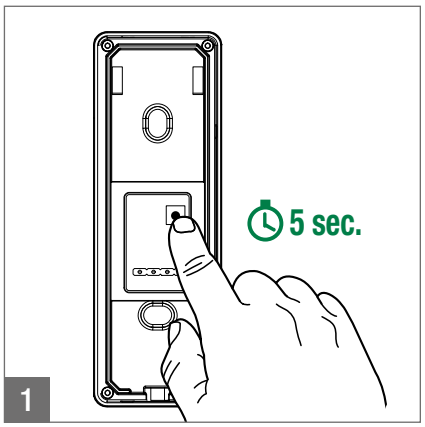

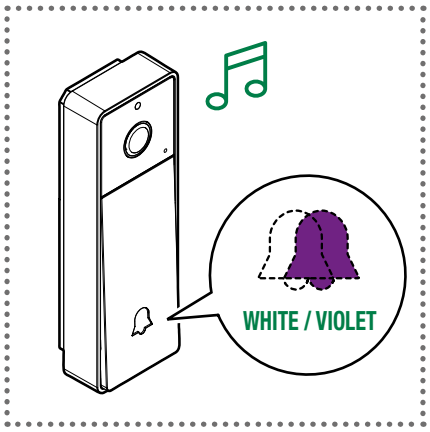

New Wi-Fi parameters

The procedure varies depending on the type of configuration carried out previously for VS8111. Depending on your system, you need to carry out one of the 2 procedures detailed below (A or B):

Case A

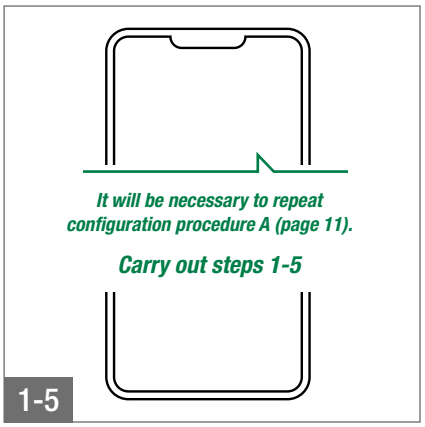

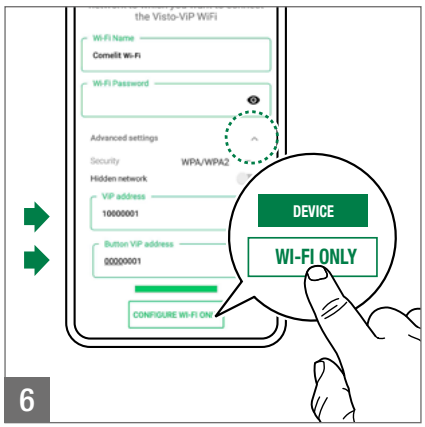

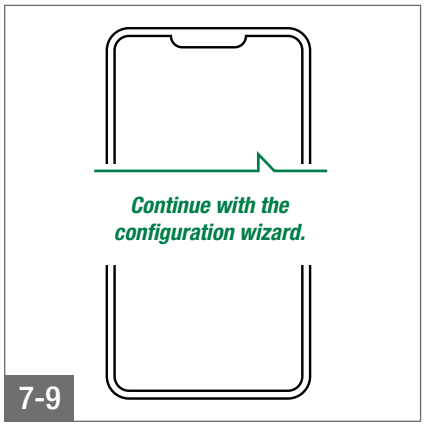

Case B

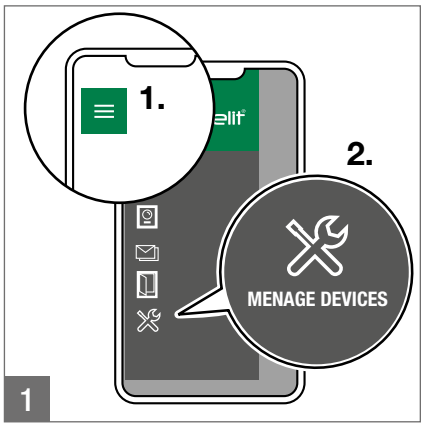

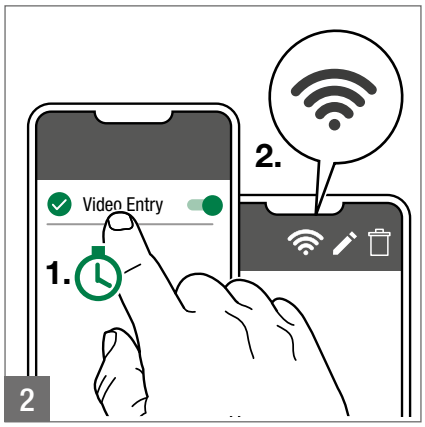

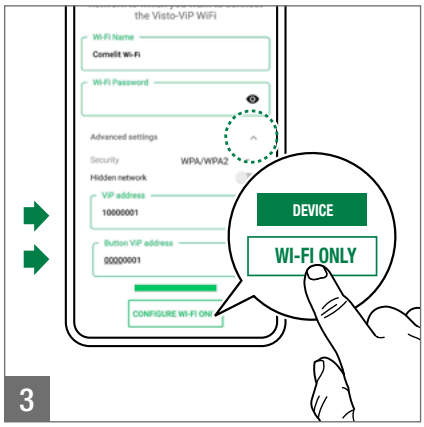

Restore factory parameters

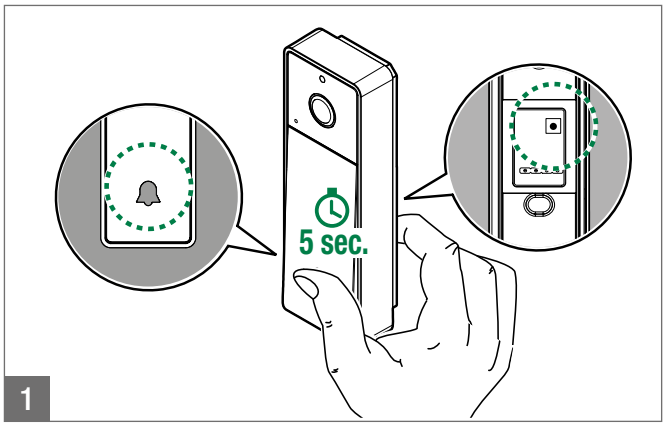

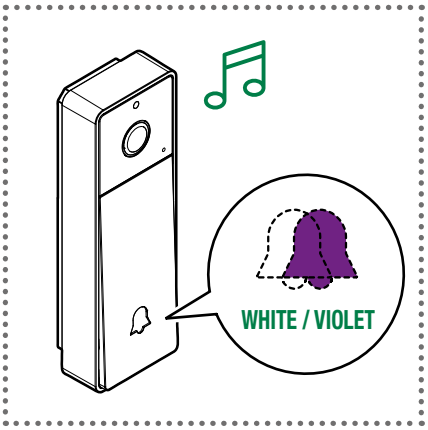

CERTIFIED MANAGEMENT SYSTEMS

ISO 9001 ISO 14001

www.comelitgroup.com

Via Don Arrigoni, 5 - 24020 Rovetta (BG) - Italy

Comelit®
Passion.Technology.Design.

1ª edizione 11/2019
cod. 2G40002463