EN

TECHNICAL MANUAL

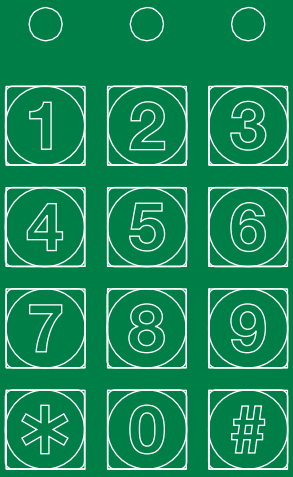

VANDAL RESISTANT DIGITAL ACCESS CONTROL KEYPAD

Programming & Installation Complete Manual

Comelit®

Passion. Technology. Design.

Warning

- This Comelit product was designed for use in the creation of audio and video communication systems in residential, commercial or industrial settings and in public buildings or buildings used by the public.
- All activities connected to the installation of Comelit products must be carried out by qualified technical personnel, with careful observation of the indications provided in the manuals / instruction sheets supplied with those products.
- Cut off the power supply before carrying out any maintenance procedures.
- Use wires with a cross-section suited to the distances involved, observing the instructions provided in the system manual.
- We advise against running the system wires through the same duct as the power cables (230V or higher).
- To ensure Comelit products are used safely: carefully observe the indications provided in the manuals / instruction sheets and make sure the system created using Comelit products has not been tampered with / damaged.
- Comelit products do not require maintenance aside from routine cleaning, which should be carried out in accordance with the indications provided in the manuals / instruction sheets. Any repair work must be carried out: for the products themselves, exclusively by **Comelit Group S.p.A.**, for systems, by qualified technical personnel.
- **Comelit Group S.p.A.** does not assume any responsibility for: any usage other than the intended use; non-observance of the indications and warnings contained in this manual / instruction sheet. **Comelit Group S.p.A.** nonetheless reserves the right to change the information provided in this manual / instruction sheet at any time and without prior notice.

Table of contents

INTRODUCTION 3

DESCRIPTION OF CONNECTION TERMINALS & INDICATORS 4
- **Connection terminals** 4
- **The led indicators** 6
- **Back lighting (back-lit jumper selection)** 6
- **The pacifier tones & the led indicating signals** 6

STANDARD PROGRAMMING SUMMARY CHART 7

SETTING & PROGRAMMING 10
- **Criteria for Programming** 10
- **Enter and Exit Programming Mode** 10
- **The DAP Jumper (Direct Access to Programming Mode) – If Master Code is Forgotten** 10
- **Programming A New Master Code** 11
- **System Refresh (Complete Data Refresh)** 11
- **Programming The User Codes** 12
- **Programming The Super User Code** 13
- **Programming The Duress Codes** 15
- **Programming The Visitor Codes** 16
- **Deleting User Codes & Other Function Codes** 17
- **Configuration of Output Modes for Outputs 1 & 2** .. 18
- **False Attempt System Lock-up or Reporting** 19
- **Door Forced-Open Warning** 20
- **Output Activation Announcer** 20
- **User Code Entry Modes (Auto or Manual)** 21
- **Pacifier Tones ON-OFF** 21
- **Main Status LED Flashing ON-OFF** 21
- **Egress Delay & Warning** 22
- **Delay Time to Start Door-Propped-Up Warning** 23

SET KEYPAD TO SINGLE USER MODE (to whom it may require) 24
- **Programming Summary Chart for “Single-User Mode”** 24
- **Programming Examples for “Single-User Mode”** ... 25

SPECIFICATIONS 26

APPLICATION EXAMPLES 27

APPLICATION HINTS FOR THE AUXILIARY FACILITIESKEYACTTAMPERN 30

AUXILIARY INFORMATION 33

INTRODUCTION

Dual relay output, vandal resistant weatherproof keypads.
They employ durable back-lit metal button keyboard and rugged metal housing ideally for high traffic and harsh environment applications.
The Output 1 is a Form C relay with 5 Amp contact rating mainly designed for electric door lock actuation.
The Output 2 is a Form C relay with 1 Amp rating.

DESCRIPTION OF CONNECTION TERMINALS & INDICATORS

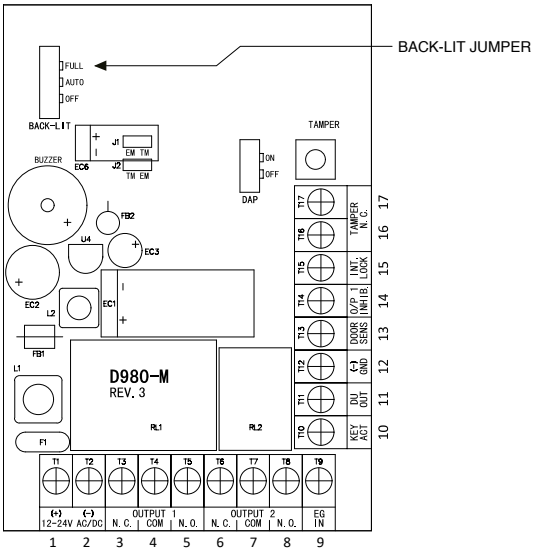

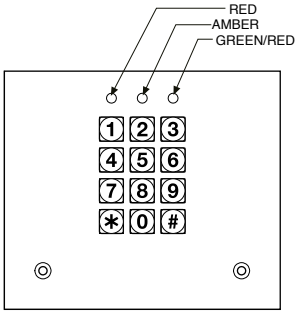

CONNECTION TERMINALS

- **INDICATORS1 - 2 : 12-24V AC/DC --** POWER INPUT
  Connect to 12-24V AC or DC power supply.
  The (–) supply, Terminal (2) and (–) GND Terminal (12) are the common grounding points of the keypad system.
  No selection jumper is required for the full input voltage range.
  Connect DC power with the (+) and (–) polarity indicated; and there is no polarity discrimination for AC power input.
- **3 - 4 - 5 : OUTPUT 1 --** DOOR LOCK
  Output 1 is a relay controlled by the group 1 user codes.
  It consists of Normally Open (N.O.) and Normally Closed (N.C.) dry contacts of 5 Amp maximum rating for electric door lock actuation.
  Use **N.O. contact for Fail-secure** electric lock while **N.C. contact for Fail-safe**.
  The output contact is programmable for Start / Stop (toggle) mode or timer mode from 1 to 999 seconds.
  See programming Location 40-43 for the details.
- **6 - 7 - 8 : OUTPUT**
  This is an auxiliary relay output with 1 Amp rating Normally Open (N.0.) and Normally Closed (N.C.) dry contacts controlled by the group 2 user codes, which is ideal for controlling security systems & automatic operators.
  It is programmable for Start / Stop (toggle) operation or timing operation from 1 to 999 seconds.
  See programming Location 50- 53 for the details.
- **9 - EG IN --** EGRESS INPUT
  A Normally Open (N.O.) input terminal refers to (–) ground, with the help of a normally open button to activate the Output 1 for the same time period as like the user code.
  Egress button is usually put inside the house near the door.
  More than one egress buttons can be connected in parallel to the terminal.
  Leave this terminal open if it is not used.
- **10 : KEY ACT --** KEYPAD ACTIVE OUTPUT
  This is an NPN transistor open collector output with maximum ratings of 100mA sink and 24V DC.
  It switches to (–) ground for 10 seconds on each key touching This can be used to turn on lights, CCTV camera, or buzzer to notify a guard.
  See Application Hints for more information.

- **11 : DU OUT --** DURESS OUTPUT
  An NPN transistor open collector output.
  It switches to (–) ground after the Duress Code is entered.
  Use it to trigger an alarm zone, an auto-dialer or turn on a buzzer to notify a guard. Ic max: 100mA sink. Vc max: 24VDC.
- **12 : GND (-) --** COMMON GROUND
  An auxiliary negative common ground of the keypad.
- **13 : DOOR SENS --** DOOR POSITION SENSOR INPUT
  A Normally Closed (N.C.) input terminal referring to (–) ground.
  With the help of a normally closed magnetic door switch, the system monitors the position of open or closed of the door and will give the following functions:

NOTE: Always connect this terminal to (–) ground if not used.

1 Door Auto Re-lock
The system will immediately relock the door after valid access has been gained before the end of the programmed time for output 1, that prevents unwanted "tailgate" entries.

2 Door Forced Open Warning
The keypad will generate door forced-open warning instantly if the door is forced to open without a valid code user entry or egress input.
The warning will last for 60 seconds and can be stopped anytime with an user code for output 1.
This function is selectable via the programming options at Location 80.

3 Door Propped-up Warning
When the door is left open longer than the allowable time.
The keypad will generate door propped-up warning after the expiry of the pre-set door-open-time until the door is closed again.
The door-open-time is programmable from 1 to 999 seconds at Location 9.

4 Inter-lock Control
The inter-lock control output goes to (–) while the door is open in order to give signal to disable the other keypad in the inter-lock system.

- **14 : O/P 1 INHIB. --** OUTPUT 1 INHIBIT
  A Normally Open (N.O.) input terminal refers to (–) ground.
  Both user code 1 and Egress button can not activate output 1 while this terminal is tied to (–) ground.
  It is prepared for cross wire connection in Inter-lock application.
- **15 : INT. LOCK --** INTER-LOCK CONTROL OUTPUT
  An NPN transistor open collector output.
  It is OFF at normal condition and switches to (–) ground immediately for the first 5 seconds after keying in a valid user code or pressing the egress button to operate output 1, then, it will keep tying to (–) ground during the time that the door position sensor is open circuit due to door opening.
  Use this output to control the other keypad in an inter-lock system to prevent that both doors can be opened at the same time.
  An inter-lock system is a two-door system that always allows only one door to open during the operation time.
  While one of the doors in the system is opened, the other door keeps close until the opened door is re-closed in order to prevent the unauthorized people dashing into a protected area.
- **16 - 17 : TAMPER N.C.**
  Normally Closed contact while the keypad is secured on the box.
  It is open while keypad is separated from the box.
  Connect this N.C. terminal to a 24 hour zone of an alarm system if necessary.

THE LED INDICATORS

- **MAINS (AMBER)**
  This is a status indicator.
  It flashes during standby and other indications in synchronization with the pacifier tones.
  See the chart of LED indication signals below for the details.
- **DOOR (GREEN & RED)**
  This is a dual LED.
  It lights up in green while output 1 is active (The door is open) and red while Output 1 is Inhibited; including manually inhibited with Super User Code or due to False Code Lock-up settng in Location 70.
- **Auxiliary (RED)**
  It lights up while output 2 is active.

BACK LIGHTING (BACK-LIT JUMPER SELECTION)

1 FULL BACKLIT ---- The keypad gives dim backlit in standby.
It turns to full backlit when a key button is pressed, then back to dim backlit 10 seconds after the last key button is pressed.

2 AUTO BACKLIT ---- The keypad gives no backlit in standby.
It turns to full backlit automatically when a key button is pressed, then back to OFF 10 seconds after the last key button is pressed.

3 BACKLIT OFF ----- The keypad gives no backlit at all.

THE PACIFIER TONES & THE LED INDICATING SIGNALS

The built-in buzzer and the MAINS LED indicator give the following tones and signals for operation status:

STATUS	TONES*	LED SIGNALS
1. In programming mode	---	ON
2. Successful key entry	1 Beep	1 Flash
3. Successful code entry	2 Beeps	2 Flashes
4. Unsuccessful code entry	5 Beeps	5 Flashe
5. DAP jumper not replaced	Continuous Beeps	Continuous Flashes
6. In standby mode	---	1 Flash in 2 seconds interval
7. Output relay activated	1 second Long Beep **	---

NOTE:
* All Pacifier Tones can be enabled or disabled through programming options at Location 83.
** The Output Activation Beep can be enabled or disabled through programming options at Location 81.

STANDARD PROGRAMMING SUMMARY CHART

A Enter Programming Mode with Master Code (Exit-Factory Master Code: 0 0 0 0)

Entry of Master Code	Confirm	Comments
X X X X	*	Set system to Programming Mode

NOTE:
Factory has put a master code 0 0 0 0 into the keypad before exit-factory, owner may take it for first time use.

B System Refreshing - Installer Programming **Programming(Default: 8 9 0 1, Multi-user mode)**

Refresh Code	Confirm	Comments
8 9 0 1	#	Clear all previously stored data and set keypad back to default values except Master Code

C Code Entries - User Programming

1 Recording Master Code and User Codes - User Programming **(No Default Codes)**

Locations	User IDs	Entry of Codes	Confirm	Comments
0		4 to 8 digits	#	Owner's Master Code for settng system to programming mode
1	00 to 99	4 to 8 digits	#	100 User Codes for operating Output 1
2	0 to 9	4 to 8 digits	#	10 User Codes for operating Output 2

2 Recording Super User Code - User Programming **(No Default Codes)**

Locations	Entry of Code	Confirm	Comments
4 5	4 to 8 digits	#	Owner's Multi-task User Code

3 Recording Duress Codes - User Programming **(No Default Codes)**

Locations	User IDs	Entry of Code	Confirm	Comments
4 6	0 to 9	4 to 8 digits	#	10 emergency user codes for actuating Output 1 and Duress Output simultaneously to report user under duress1)

4 Recording the Visitor Codes - User Programming **(No Default Codes)**

Locations	User IDs	OperationTime	Entry of Code	Confirm	Comments
4 7	0 to 9	00 to 99	4 to 8 digits	#	10 visitor codes for operating Output 1. **Operation Time:** 00 = One time use only 01 to 99 = Valid within time limit of 1-99 hours

D Configuration of Output Modes - Installer Programming **(Default: Momentary, 1-second for all 3 outputs)**

Location	Code of Timing	Confirm	Comments
4 0	1 to 999	#	Output 1, Momentary Mode from 1 to 999 seconds **(default=1 second)**
4 1		#	Output 1, Start / Stop Mode (toggle)
4 2		#	Output 1, Start / Stop Mode (toggle) with 2-digit Accelerated start code
4 3		#	Output 1, Start / Stop Mode (toggle) with 3-digit Accelerated start code
Location	Code of Timing	Confirm	Comments
5 0	1 to 999	#	Output 2, Momentary Mode from 1 to 999 seconds **(default=1 second)**
5 1		#	Output 2, Start / Stop Mode (toggle)
5 2		#	Output 2, Start / Stop Mode (toggle) with 2-digit Accelerated Start Code
5 3		#	Output 2, Start / Stop Mode (toggle) with 3-digit Accelerated Start Code

E False Code Lock-up & Reporting - Installer Programming **(Default: 10 tries / 30 seconds)**

Location	Lock-up Modes	Confirm	Comments
7 0	1	#	10 successive false codes, keypad locks during 30 seconds **(Default)**
7 0	2	#	10 successive false codes, Duress Output actuates (switches to GND)
7 0	5 to 10	#	Selectable of 5 to 10 false code, keypad locks during 15 minutes. Locking can be released at any time with Super User Code # 9
7 0	00	#	Disappearance of all the above securities

F Door Forced-Open Alarm - Installer Programming **(Default: Disabled)**

Location	Function Codes	Confirm	Comments
8 0	0	#	Door Forced-Open Warning disabled **(Default)**
8 0	1	#	Door Forced-Open Warning enabled, active time is 60 seconds

G Output Activation (Door Open) Announcer - Installer Programming **(Default: 1 long beep)**

Location	Function Codes	Confirm	Comments
8 1	0	#	No notification.
8 1	1	#	2 short-beep is given when the door lock is opened.
8 1	2	#	1 second long beep notification is given when the door lock is opened. It is good for locking device give no sound when it activates. Such as a magnetic lock **(Default)**

H User Code Entry Modes (Auto or Manual) - Installer Programming (Default: Manual)

Location	Function Codes	Confirm	Comments
8 2	0	#	Manual Entry Mode requires to enter # button after the user codes. It is NOT necessary to set the Master Code and all User Codes in the same digit length. They can be 4-8 digits mixed arbitrary **(Default)**
8 2	1	#	Auto Entry Mode does not need to enter # button after the user codes. However, All the User Codes MUST be in the same digit length of the Master Code and they can be 4-8 digits

I Pacifier Tones (Key-press beeps) - Installer Programming (Default: ON)

Location	Function Codes	Confirm	Comments
8 3	0	#	Pacifier tone OFF, good for silent environment
8 3	1	#	Pacifier tone ON for every key-press **(Default)**

J Main LED Flashing ON-OFF - Installer Programming (Default: Flashing)

Location	Function Codes	Confirm	Comments
8 4	0	#	Main LED OFF during system standby, good for people do not like flashing LED at night
8 4	1	#	Main LED flashing during system standby **(Default)**

K Egress Delay & Warning - Installer Programming (Default: Instant, No warning)

Location	Delay Options	Confirm	Comments
8 5	0 to 4	#	Five delay options for operating Output 1 with egress button: 0 – Instant activation, no delay and warning **(Default)** 1 – Momentary contact, 5 seconds delay with warning 2 – Momentary contact, 10 seconds delay with warning 3 – Hold contact, 5 seconds delay with warning 4 – Hold contact, 10 seconds delay with warning

L Delay Time to Start Door Propped-up Warning - Installer Programming (Default: OFF)

Location	Delay Time	Confirm	Comments
9	0	#	No propped-up Warning **(Default)**
9	1 to 999	#	Delay time from 1 to 999 seconds before door propped-up Warning starts.while the door is stuck and left open

M Exit Programming Mode

Confirm	Comments
*	It is always necessary to set keypad back to normal operations after programming

SETTING & PROGRAMMING

CRITERIA FOR PROGRAMMING

1 The keypad **MUST** be in Programming Mode for making Settng and Data Changes.
2 Programming can be accomplished in workshop or at the installation site.
All data are stored in a non-volatile memory and will not be lost in power off.
3 **DO NOT** disconnect the keypad from power while in programming mode; otherwise could cause a keypad memory error.

ENTER AND EXIT PROGRAMMING MODE

It is necessary to set the keypad in programming mode with the Master Code for all programming.

1 **Enter programming mode with the master code and confirm it with [*] key.**
For the owner's convenience in programming at the first time, a Master Code [0][0][0][0] has been set before exit-factory.

Master Code	Confirm	
[0][0][0][0]	[*]	--- Keypad is now in programming mode

2 Use the programming instructions stated in "Programming Summary Chart" to make change of the keypad data.
Programming can be done continuously one by one on the Locations required until finish.
3 **Exit the programming mode by pressing the [*] key after all the required programming is finished.**

NOTE:
- For security reason, owner should program a new master code to replace the exit-factory master code.
- Once a new master code is programmed, the old master code is replaced.
- Use DAP jumper to set keypad to programming mode if master code is forgotten.
See DAP Jumper description for the details.

THE DAP JUMPER (DIRECT ACCESS TO PROGRAMMING MODE) – IF MASTER CODE IS FORGOTTEN

If the master code is forgotten, use the DAP jumper (located on the main circuit board) to override the forgotten code and permit the keypad direct entry into programming mode.
Apply the procedures precisely as follows.

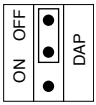

1 Disconnect the power supply.
2 Move the DAP jumper from OFF to ON.
3 Reconnect the power supply. The keypad will start beeping.
4 Move the DAP jumper back to OFF position.
The keypad will stop beeping as soon as the jumper is removed.
5 The keypad is now in the programming mode, ready to receive new programming data.
6 Re-program the keypad with the available options shown on the "Programming Summary Chart".

- The operation of DAP jumper is for settng the keypad into programming mode only.
It does not affect the stored data in the programming locations.
- After the keypad is in programming mode, a new master code may be programmed to replace the one that was forgotten.

PROGRAMMING A NEW MASTER CODE (Location 0)

Location	New Master Code	Confirm
0	X X X X	#

NOTE:

- Location 0 is the storage location for the master code.
- The master codes can be 4-8 digits long.
- User codes must have the same length as the master code if the keypad is in auto code entry mode.

Programming Example:

1 Set keypad to programming mode with master code and * key or DAP jumper.
Taking the factory-set master code **0 0 0 0** as example here:

0 0 0 0 *

2 **Program a new Master Code 3 2 8 9 for the keypad:**

0 3 2 8 9 #

3 Exit programming mode by pressing the * key

NOTE:

- The keypad has a new master code **3 2 8 9** now.
- The owner can use the new master code to set the keypad into programming mode in the future and does not require to use DAP jumper every time.

SYSTEM REFRESH (COMPLETE DATA REFRESH) (Refresh Code 8901)

Sometimes it may require to completely erase all the current data in memory (except the master code) and set the keypad back to its default values as like a new unit.
This may be necessary while the stored data can not be traced or for a new owner who bought a house with a keypad installed.
The procedures are as follows:

1 Set keypad to programming mode with master code and * key.
Taking the previous programmed master code **3 2 8 9** as example here:

3 2 8 9 *

2 **Enter the system refresh code and confirm with # key to clear all the current stored data except the Master Code:**

8 9 0 1 #

3 Enter the required new data for the keypad. See “Programming Summary Chart” for the available data

4 Exit programming mode by pressing the * to make keypad back to normal operation mode after all the required data are entered.

NOTE:

- The keypad is in Manual Code Entry Mode **(Default)** after refreshing.

PROGRAMMING THE USER CODES (Locations 1 & 2)

Two groups of user codes can be programmed to operate output 1 and 2 respectively.
The following are the programming procedures.

	Locations	User ID	Entry of Code	Confirm
Output 1	1	00 - 99	4 -8 Digits	#
Output 2	2	0 - 9	4 -8 Digits	#

NOTE:

- Locations 1 and 2 are the storage places for the User Codes for Output 1 and 2 respectively.
- 100 unique User IDs **00-99** for 100 User Codes for Output 1.
- 10 unique User IDs **0-9** for 10 User Codes for Output 2.
- The user codes can be 4-8 digits long in manual code entry mode; but must have the same length as the master code if the keypad is in auto code entry mode.
- See “Programming Summary Chart” Section C – 1 for more information.
- See information on **Location 82** concerning digit length in Auto and Manual code entry modes.

Programming Example:

1 Set keypad to programming mode with master code and * key.
Taking the previous programmed master code **3 2 8 9** as example here:

3 2 8 9 *

2 **Program an User Code 8 3 2 1 for output 1 ---------- One of the 100 user codes (user ID: 00-99, taking ID = 01 as example):**

1 0 1 8 3 2 1 #

3 **Program an User Code 5 4 3 2 1 for output 2 ------- One of the 10 user codes (user ID: 0-9, taking ID=1 as example):**

2 1 5 4 3 2 1 #

4 Exit programming mode by pressing the *

Operation (Manual Code Entry Mode)

1 Press 8 3 2 1 # ---------- Output 1 activates

1 Press 5 4 3 2 1 # ---------- Output 2 activates

NOTE:

In Auto Code Entry Mode only the User Codes that have the same digit length as the master code are valid and press the # key is not required.

PROGRAMMING THE SUPER USER CODE (Location 45)

Super User Code is a multi-task user code for activating the two outputs 1 & 2 and operating the special functions of Output 1.

Locations	Super User Code	Confirm
4 5	4 - 8 Digits	#

NOTE:

- The super user code can be 4-8 digits long in manual code entry mode; but must has the same length as the master code if the keypad is in auto code entry mode.
- Super user code and Egress Button are excluded from any system operation inhibit and lock-up; they are always valid for door open at anytime for safety.
- See “Programming Summary Chart” Section C – 2 for more information.
- See information on **Location 82** concerning digit length in Auto and Manual code entry modes.

Programming Example:

1 Set keypad to programming mode with master code and * key.
Taking the previous programmed master code **3 2 8 9** as example here:

3 2 8 9 *

2 **Program 2 5 8 0 as Super User Code:**

4 5 2 5 8 0 #

3 Exit programming mode by pressing the *

Operation :

1 **Operating Output 1 and 2**
Super User Code is just like a normal user code.
Simply key-in the code with a specific output number of the desired output.
Super User Code can also be used to reset an output operating with long timer instantly at anytime required.

2 5 8 0 # 1 ---------- Output 1 activates
2 5 8 0 # 2 ---------- Output 2 activates

2 **Overriding The Door Lock Controlled by Output 1 (Keep Door Un-locked)**
The Output 1 is usually for door lock control.
In some circumstances, the door lock may be required to be un-locked for a period for people to enter-exit the premises conveniently without user code.
The function Starts / Stops in toggle with the following code entry.

2 5 8 0 # 7 ---------- The Door is Un-locked, Start-Stop in Toggle.

NOTE:

- The “Output 1” LED (Green) turns ON while the door is un-locked.
- DO NOT forget to stop this function after its use is no longer required.
- **This feature is recommended for Fail-safe locks only.**
- **Fail-secure lock is NOT recommended, which may be damaged by staying activated for too long due to high power consumption.**

REMARK :

While SUPER USER CODE # 7 is in operation to hold the door lock open, the functions that rely on the door sensor (such as a magnetic contact) and the User Codes for output 1 are all temporarily suspended until SUPER USER CODE # 7 is entered again to release the door holding function.

The following functions are Temporary Suspended:

- Door Auto-relock.
- Door Forced Open Warning (at Location 80).
- Door Propped-up Warning (at Location 9).
- Dual Keypad Inter-lock Operation.
- All User Codes Including Super User Code for Output 1.
- Duress Output Actuated by Duress Code for Output 1.

3 **Inhibiting The User Codes for Output 1 (Manually Disable All User Codes for Door Lock Actuation)**
To enhance security after office hour or while nobody inside house, owner can manually stop the operation of Output 1 to prevent users from accessing the protected premise with user codes.
The function is Start-Stop in toggle with the following code entry.

[2] [5] [8] [0] [#] [9] ---------- Door Lock Operation Disabled, Start-Stop in Toggle.

NOTE:

- Inhibiting applies to all the user code for Output 1 only.
- For safety reasons, the egress button and the super user code continue to operate the output 1 even output 1 is inhibited.
- A red LED is ON while output 1 is inhibited.
- The inhibition does not apply to output 2.

PROGRAMMING THE DURESS CODES (Location 46)

Duress Code(s) is an important code to protect the user in case of forcing to open the door under duress.
The duress code operates like a normal user code to activate Output 1 for door opening and at the same time it also activates the Duress Output without any indication.
The duress output can be used to actuate Auto-dialer or security system to report the event.

Locations	User ID	Duress Code	Confirm
4 6	0 - 9	4-8 Digits	#

NOTE:

- Duress codes can be 4-8 digits long in manual code entry mode; but must have the same length as the master code if the keypad is in auto code entry mode.
- 10 unique User IDs **0-9** for 10 Duress Codes.
- The Duress code continues to operate and is not governed by any system inhibiting or lock-up function.
- Always set a Duress code that is easy to remember in Panic situation.
  Only one number different from the daily used User code is recommended.
  For example: A Daily User Code is **1 3 5 7**, then **3 3 5 7** or **1 3 5 8** may be a good choice for Duress code.
- See “Programming Summary Chart” Section C – 3 for more information.
- See information on **Location 82** concerning digit length in Auto and Manual code entry modes.

Programming Example:

1 Set keypad to programming mode with master code and * key.
Taking the previous programmed master code **3 2 8 9** as example here:

3 2 8 9 *

2 **Program 3 3 5 7 as 1st Duress Code:**

4 6 1 3 3 5 7 #

Program 2 3 9 8 0 as 2nd Duress Code --- if more user needs duress code:

4 6 2 2 3 9 8 0 #

3 Exit programming mode by pressing the *

Operation :

1 Activate Output 1 & Duress Output with the 4-digit User Code:

3 3 5 7 #

2 Activate Output 1 & Duress Output with the 5-digit User Code:

2 3 9 8 0 #

3 De-activate (reset) Duress Output with Any normal User Code; 1357 is the user code in this example:

1 3 5 7 #

NOTE:

- Duress Output works continuously after activated until reset.
- Duress Code always activates the Output 1 and the Duress Output simultaneously, but can not de-activate Duress Output.
  Only a normal User Code or Super User Code can reset Duress Output.

PROGRAMMING THE VISITOR CODES (Location 47)

Visitor Codes are temporary user codes that can be assigned to visitors or temporary workers to activate Output 1 (usually for door lock actuation).
They can be programmed for One-Time use or with Time-Limit in a valid duration.

Locations	User ID	Valid Duration	Entry of Code	Confirm
4 7	0 - 9	00 or 01 to 99	Visitor Code	#

NOTE:

- Visitor codes can be 4-8 digits long in manual code entry mode; but must have the same length as the master code if the keypad is in auto code entry mode.
- 10 unique User IDs **0-9** for 10 Visitor Codes.
- Valid Duration:

0 0	One-Time Code – It has no time limit but can only be used ONCE by visitor, after which it is automatically cleared.
0 1 to 9 9	Time-Limit in Hour – Set the duration the visitor codes will be valid, from 1 to 99 hours

- All Visitor Codes will be deleted after power lost.
- See “Programming Summary Chart” Section C – 4 for more information.
- See information on **Location 82** concerning digit length of the code in Auto and Manual code entry modes.

Programming Example:

1 Set keypad to programming mode with master code and * key.
Taking the previous programmed master code **3 2 8 9** as example here:

3 2 8 9 *

2 **Program a Visitor Code 1 3 7 8 at ID “0” for One-Time use:**

4 7 0 0 0 1 3 7 8 #

3 **Program a Visitor Code 2 3 0 8 9 at ID “1” with Time-Limit of 5 hours:**

4 7 1 0 5 2 3 0 8 9 #

4 **Program a Visitor Code 8 3 5 8 at ID “2” with Time-Limit of 10 hours:**

4 7 2 1 0 8 3 5 8 #

5 Exit programming mode by pressing the *

Operation :

1 Activate Output 1 with the One-Time Visitor Code:

1 3 7 8 # ---------- The code is cleared after use

2 Activate Output 1 with the 5 hours Time-Limit Visitor Code:

2 3 0 8 9 # ---------- Un-limited use within 5 hours

3 Activate Output 1 with the 10 hours Time-Limit Visitor Code:

8 3 5 8 # ---------- Un-limited use within 10 hours

DELETING USER CODES & OTHER FUNCTION CODES

(Locations 1, 2, 45, 46, & 47)

To delete a user who has left the company or who no longer has the authority to enter the protected area.

Deleting Examples:

1 Set keypad to programming mode with master code and [*] key.
Taking the previous programmed master code **3 2 8 9** as example here:

[3] [2] [8] [9] [*]

2 Deleting the codes one by one if more than one codes are required. Enter Location number and User ID (if has) and the [#] key.

a) Delete a User Code from ID 01 from Output 1, press Location 1, User ID 01 and [#] key:

[1] [0] [1] [#]

b) Delete a User Code from ID 1 from Output 2, press Location 2, User ID 1 and [#] key:

[2] [1] [#]

c) Delete the Super User Code, press Location 45 and [#] key:

[4] [5] [#]

d) Delete a Duress Code from ID 2, press Location 46, User ID 2 and [#] key:

[4] [6] [2] [#]

e) Delete a Visitor Code from ID 3, press Location 47, User ID 3 and [#] key:

[4] [7] [3] [#]

3 Exit programming mode by pressing the [*]

CONFIGURATION OF OUTPUT MODES FOR OUTPUTS 1 & 2 (Locations 40–43 & 50–53)

Outputs 1 & 2 can be programmed to trigger with the following options.
For a programmed length of time from 1 to 999 seconds; or to trigger ON and OFF in toggle with a user code; or to trigger ON with an accelerated start code and OFF with an full digit user code.

	Locations	Time Length	Confirm
A)	4 0	1 – 999	#
B)	4 1		#
C)	4 2		#
D)	4 3		#

NOTE:
Programming Locations:

- **Locations 40, 41, 42 and 43** for Output 1
- **Locations 50, 51, 52 and 53** for Output 2

The programming manner of the two outputs are exactly the same.

Programming Options for Outputs 1 & 2 *(See "Programming Summary Chart" Section D for more information):*

A **Location 40 or 50 : Momentary Mode with time length from 1 to 999 seconds (Default = 1 second)**
The relay outputs can be programmed to work for a time length from 1 to 9 9 9 seconds to cope with the door opening required.

B **Location 41 or 51 : Start / Stop Mode (toggle)**
The relay outputs can be programmed to trigger ON (start) and OFF (stop) with a user code.

C **Location 42 or 52 : Start / Stop Mode (toggle) with 2-digit Accelerated Code**
The relay outputs can be programmed to trigger ON with only the first 2 digits of a user code and OFF with a full user code.
Example:
a) User Code **8 3 2 1** is a full code, then the first 2 digit **8 3** is the accelerated code.
b) User Code **5 4 3 2 1** is a full code, then the first 2 digit **5 4** is the accelerated code.

D Location 43 or 53 : Start / Stop Mode (toggle) with 3-digit Accelerated Code
The relay outputs can be programmed to trigger ON with only the first 3 digits of a user code and OFF with a full user code.
Example:
a) User Code **5 4 3 2 1** is a full code, then the first 3 digit **5 4 3** is the accelerated code.
b) User Code **9 2 7 0 5 3** is a full code, then the first 3 digit **9 2 7** is the accelerated code.

Programming Example:

1 Set keypad to programming mode with master code and * key.
Taking the previous programmed master code **3 2 8 9** as example here:

3 2 8 9 *

2 **Set Output 1 in momentary mode of 5 seconds:**

4 0 5 #

3 **Set Output 2 in Start / Stop Mode; OR**

5 1 #

4 **Set Output 2 in Start / Stop Mode with 3-digit Accelerated Start Code:**

5 3 #

5 Exit programming mode by pressing the *

Operation :

1 Operate Output 1 in momentary mode of 5 seconds using user code **8 3 2 1** that was programmed previously:

[8] [3] [2] [1] [#] ---------- Output relay 1 operates for 5 seconds

2 Operate Output 2 in Start / Stop mode using user code **5 4 3 2 1** that was programmed previously:

[5] [4] [3] [2] [1] [#] ---------- Output relay 2 start / stop in toggle with the same user code

3 Operate Output 2 in Start / Stop mode with the 3-digit Accelerated code using user code **5 4 3 2 1** if it was programmed previously:

[5] [4] [3] [#] ---------- Un-limited use within 10 hours

[5] [4] [3] [2] [1] [#] ---------- Un-limited use within 10 hours

NOTE:

- **The purpose of the accelerated Code** -- Start / Stop mode with accelerated code can be considered as two user codes with one for starting and the other for stopping the output. Owner can give the accelerated code to the staff to start a system (for example, an alarm system). The staff can only start the system but can not stop it. Only the owner can stopthe system with the full user code.
- The Super User Code is always valid to Start / Stop the relay outputs.

Super User Code [#] [1] ---------- Output 1 Activates or De-activates

Super User Code [#] [2] ---------- Output 2 Activates or De-activates

FALSE ATTEMPT SYSTEM LOCK-UP OR REPORTING **(Location 70)**

The keypad can be programmed to give system lock up or to report the event in order to secure the premises against unauthorized entry of multiple false codes are entered.
The lock-up options are represented by a 1 or 2 digits code for owner's selection.

Locations	Lock-Up Options	Confirm
[7] [0]	1 to 2 Digits	[#]

Programming Codes for Lock-Up Options:

[1] After 10 successive false attempts using incorrect user codes, the keypad will lock for 30 seconds **(Default)**.

[2] After 10 successive false attempts using incorrect user codes, the Duress Output will activate.
The duress output can be used to trigger an auto-dialer or an alarm system to report the event.
The duress output can be de-activated using any user code for Output 1, or via super user code.

Super User Code [#] [1]

[5] to [10] After 5 to 10 successive false attempts using incorrect user codes, the keypad will lock for 15 minutes.
The lock-up can be terminated at any time with Super User Code during the locking period if required.

Super User Code [#] [9]

[0] [0] No system lock-up will happen.

Programming Examples:

1 Set keypad to programming mode with master code and [*] key.
Taking the previous programmed master code **3 2 8 9** as example here:

[3] [2] [8] [9] [*]

2 **Set keypad to lock 15 minutes after 5 successive false attempts using incorrect user codes:**

[7] [0] [5] [#]

3 Exit programming mode by pressing the [*]

DOOR FORCED-OPEN WARNING (Location 80)

The keypad will give door forced-open warning if the door is opened without using a user code or pressing the egress button.
This function requires an optional Normally Closed (N.C.) door position monitoring switch on the door (usually a magnetic contact or other door protection switch with N.C. contact).
Once the function is triggered, the keypad will give warning beeps.

Locations	Function Options	Confirm
8 0	0 or 1	#

Programming Options:

0 Door Forced-open Warning OFF **(Default)**

1 The warning beep activates for 60 seconds. It can be reset with a user code for output 1

NOTE:

- The door is forced to open without user code or pressing egress button – **Warning active**
- The door is opened with user code or pressing egress button – **No Warning**

OUTPUT ACTIVATION ANNOUNCER (Location 81)

WarningThe purpose of output activation announcer is to give a sound signal to notify the visitor outside to open the door when the lock is activated.
It is good for the locking device, such as a magnetic lock that gives no sound when it is activated.

Locations	Function Options	Confirm
8 1	0, 1 or 2	#

Programming Options:

0 No output activation notification will be given when the door lock is opened

1 The keypad will beep twice when the door lock is opened

2 The keypad will give a one second long beep when the door lock is opened **(Default)**.

USER CODE ENTRY MODES (AUTO OR MANUAL) (Location 82)

Some users like to press # key to confirm a code entry manually to prevent the unauthorized person to easily check out the digit length of the user code; but some people do not.
They prefer the keypad to check the code automatically when the last number of digit is reached.
The keypad can be programmed for auto or manual user code entry modes.

Locations	Function Options	Confirm
8 2	0 or 1	#

Programming Options:

0 Manual code entry mode **(Default)**, The # key must be pressed after entry of an user code to indicate the code has been entered completely.
In this case, the user codes can be 4-8 digits.arbitrary and they are not required to be in the same digit length of the master code.

1 Auto code entry mode, Pressing the # key is not required after entry of a user code. In auto code entry mode, all user codes must have the same number of digit as the master code.
For example, if .the master code is 5 digits, then all the user codes must be 5 digits as well.

PACIFIER TONES ON-OFF (Location 83)

Pacifier tones are the beep tones from the keypad to confirm the code entry successfully or not. Pacifier tone ON-OFF does not impact the sound mode of the “Output Activation Announcer” at Location 81.

Locations	Function Options	Confirm
8 3	0 or 1	#

Programming Options:

0 All pacifier tones OFF, good for place needs silent environment.

1 Pacifier tones enabled, the tones indicate operation status of the keypad; such as 1 beep for successful key entry and 5 beeps for unsuccessful code entry **(Default)**.

MAIN STATUS LED FLASHING ON-OFF (Location 84)

The status LED typically flashes while the keypad is in standby. Some people find it is annoying especially at the night time. The LED can be ON or OFF with the settng here.

Locations	Function Options	Confirm
8 4	0 or 1	#

Programming Options:

0 The status LED flashing is OFF. It is good for the people do not like a flashing light at night.

1 The status LED flashes all the time in standby mode **(Default)**

EGRESS DELAY & WARNING **(Location 85)**

Most of the keypads mainly controls “Going In” with user codes and controls “Going Out” simply pressing an egress button.
However, in some situations, providing some warning and delay are desirable before the door is open after pressing the egress button.
For example, in hospitals or schools, it may be desirable to delay the egress operation and provide a warning to prevent patients or young children from easily leaving the protected area.

- An egress button programmed with egress delay & warning does not affect the normal operation of the keypad. The user codes are always the first priority to operate output 1 to actuate the door lock.
- It is not necessary to do anything if egress delay is not required. Just leave the egress button on its default settng.

Locations	Function Options	Confirm
8 5	0 to 4	#

The Five Egress Modes:

0 Momentary Contact with no warning and delay **(Default)**
Press the egress button momentarily, Output 1 activates instantly to open the door.

1 Momentary Contact with 5 seconds delay and warning beep
Press the egress button momentarily, the keypad will beep for 5 seconds before Output 1 activates.

2 Momentary Contact with 10 seconds delay and warning beep
Press the egress button momentary, the keypad will beep for 10 seconds before Output 1 activates.

3 Hold contact for 5 seconds with warning beep
Press and hold the egress button for 5 seconds and the keypad will beep for those 5 seconds before Output 1 activates.

4 Hold contact for 10 seconds with warning beep
Press and hold the egress button for 10 seconds and the keypad will beep for those 10 seconds before Output 1 activates.

Programming & Operation Examples:

1 Set keypad to programming mode with master code and * key.
Taking the previous programmed master code **3 2 8 9** as example here:

3 2 8 9 *

2 **Program the egress button with 5 seconds delay momentarily mode:**

8 5 1 #

Operation ----------Press the egress button momentary, the keypad will beep for 5 seconds before the door is open to warn that someone is preparing to exit the protected area.

3 **Program the egress button with 5 seconds delay hold contact mode:**

8 5 3 #

Operation ----------Press and hold the egress button for 5 seconds. The keypad will beep for those 5 seconds before the door is Open to warn that someone is preparing to exit the protected area.

4 **Program the egress button to return to default settng:**

8 5 0 #

Operation ----------Press the egress button momentarily, the door is open instantly without warning.

5 Exit programming mode by pressing the *

NOTE:

For safety and to avoid confusion, when a delay is programmed, please post a notice near the egress button to notify the users.
Here are two example stickers for an egress button with 5 seconds momentary delay or 5 seconds press-and-hold delay.

Press The Button Momentarily And Wait For 5 SecondsUntil The Door Is Unlocked	Press And Hold The ButtonFor 5 SecondsUntil The Door Is Unlocked

DELAY TIME TO START DOOR-PROPPED-UP WARNING **(Location 9)**

UnlockedIf somebody opened the door and left it open longer than the programmed delay time, the keypad will generate propped-up warning beeps until the door is re-closed.
This prompts the authorized users to close a door that was not closed properly.
This function requires an optional Normally Closed (N.C.) door position monitoring switch on the door (usually a magnetic contact or other door protection switch with N.C. contact).

Locations	Delay Time	Confirm
9	0 or 1 – 999	#

Programming Options:

0	Door-propped-up Warning OFF **(Default)**.
1 to 9 9 9	Door-propped-up Warning ON with delay time of 1 to 999 seconds programmable.

NOTE:

- Propped-up warning starts when the delay time is expired.
- Propped-up warning stops when the door is closed.

SET KEYPAD TO SINGLE USER MODE (to whom it may require)

This keypad also consists of a simplified version software for code entry.
It is single user mode for those users only need one user code for each output and executing each of the special functions.
Once the keypad is in single user mode, there is no User ID required for the codes, just simply enter the code to each Locations directly.
Single user mode is prepared for those users who need simple function and use the default values for their keypad only.
Please ignore this section if it is not suitable for your application.

Important Notes:

- All user codes and master code must be 4 digits.
  The codes of more than 4 digits will be invalid.
- Change the master code to 4 digits before refreshing the keypad to single user mode.
  Otherwise, refreshing will be refused.
- Refreshing takes 2-3 seconds to complete.
  Do not enter any code during refreshing until 2 confirmation beeps are heard.
- The keypad will be in auto code entry mode in default after it is refreshed to single user mode
- The keypad can be changed back to standard multi-user mode with the system refreshing code 8 9 0 1.
- Single user mode simplifies the procedures for code entry only.
  All programming procedures for other features are exactly the same like in multi-user mode and not affected.
- See summary chart for the "**Single-User Mode**" programming procedures.

PROGRAMMING SUMMARY CHART FOR "SINGLE-USER MODE"

A Enter Programming Mode with Master Code **(Exit-Factory Master Code: 0 0 0 0)**

Entry of Master Code	Confirm	Comments
X X X X	*	Set system to Programming Mode

NOTE:
Factory has put a master code 0 0 0 0 into the keypad before exit-factory, owner may take it for first time use.

B System Refreshing to Single User Mode - Installer Programming **(Default: 8 9 0 0, Single-user mode)**

Refresh Code	Confirm	Comments
8 9 0 0	#	Clear all previously stored data and set keypad back to default values except Master Code

C Code Entries - User Programming
1 Recording Master Code and User Codes - User Programming **(No Default Codes)**

Locations	Entry of Codes	Confirm	Comments
0	4 digits fixed	#	Owner's Master Code for settng system to programming mode
1	4 digits fixed	#	User Code for operating Output 1
2	4 digits fixed	#	User Code for operating Output 2

2 Recording Super User Code - User Programming **(No Default Codes)**

Location	Entry of Code	Confirm	Comments
4 5	4 digits fixed	#	Owner's Multi-task User Code

3 Recording Duress Codes - User Programming **(No Default Codes)**

Location	Entry of Code	Confirm	Comments
4 6	4 digits fixed	#	Emergency user code for actuating Output 1 and Duress Output simultaneously to report user under duress

4 Recording the Visitor Codes - User Programming **(No Default Codes)**

Location	Operation Time	Entry of Code	Confirm	Comments
4 7	00 to 99	4 digits fixed	#	visitor code for operating Output 1. **Operation Time:** 00 = One time use only 01 to 99 = Valid within time limit of 1-99 hours

PROGRAMMING EXAMPLES FOR "SINGLE-USER MODE"

1 Set keypad to programming mode with the Ex-factory Master Code **0 0 0 0** or your Master Code if it was changed:

0 0 0 0 *

2 Refresh the keypad to Single-User Mode with Refreshing code **8 9 0 0**:

8 9 0 0 #

3 Program a new Master Code **3 2 8 9** for the keypad:

0 3 2 8 9 #

4 Program an User Code **8 3 2 1** for **output 1**:

1 8 3 2 1 #

5 Program an User Code **5 4 3 2** for **output 2**:

2 5 4 3 2 #

6 Program a Super User Code **2 5 8 0**:

4 5 2 5 8 0 #

7 Program a Duress Code **8 3 2 3**:

4 6 8 3 2 3 #

8 Program a Visitor Code **2 3 0 8** with Time-Limit of **8 hours**:

4 7 0 8 2 3 0 8 #

9 Exit programming mode by pressing the *

SPECIFICATIONS

- **Operation Voltage:**
  12-24V AC/DC, full voltage range
- **Operation Current**:
  Quiescent - 16mA
  Maximum - 78mA (Relays operating)
- **Operation Modes**:
  a) Multi User Mode 100 user codes for output 1 (user number 00-99), Auto or Manual Code Entry
  10 user codes for output 2 (user number 0-9), Auto or Manual Code Entry
  b) Single User Mode 1 user code for each output and the special functions, Auto or Manual Code Entry
- **User Code Combinations**:
  a) Single User Mode 10,000 (User Code fixed at 4 digits)
  b) Multi User Mode 110,000,000 (User Code 4-8 digits programmable)
- **Input Sensing Terminals:**
  a) Egress Input -- Normally open referring to (–) ground
  b) Door Position Sensor Input -- Normally closed referring to (–) ground
  c) Output 1 Stop Control -- Normally open referring to (–) ground
- **Output Contacts:**
  OUTPUT 1 : Normally Closed and Normally Open Dry Contacts, 5A / 24VDC Max. Rating
  OUTPUT 2 : Normally Closed and Normally Open Dry Contacts, 1A / 24VDC Max. Rating
- **Tamper Switch Contact:**
  Normally Closed Dry Contact, 50mA / 24VDC Max.
- **Duress, Inter-lock & Key Active Output Rating:**
  NPN Open Collector switches to ground when active, 24VDC / 100mA Sink
- **Auto Refreshing Time During Code Entry:**
  a) Eash Digit Maximum Entry Time Limit -- 10 seconds
  b) Eash Code Maximum Entry Time Limit -- 30 seconds
- **Weatherproof:** IP54
- **Operation Temperature:**
  -25°C to +55°C
- **Ambient Humidity:**
  5-95% relative humidity (non-condensing)

Specifications are subject to change for modification without notice

APPLICATION EXAMPLES

1) BASIC WIRINGS OF A STAND ALONE DOOR LOCK

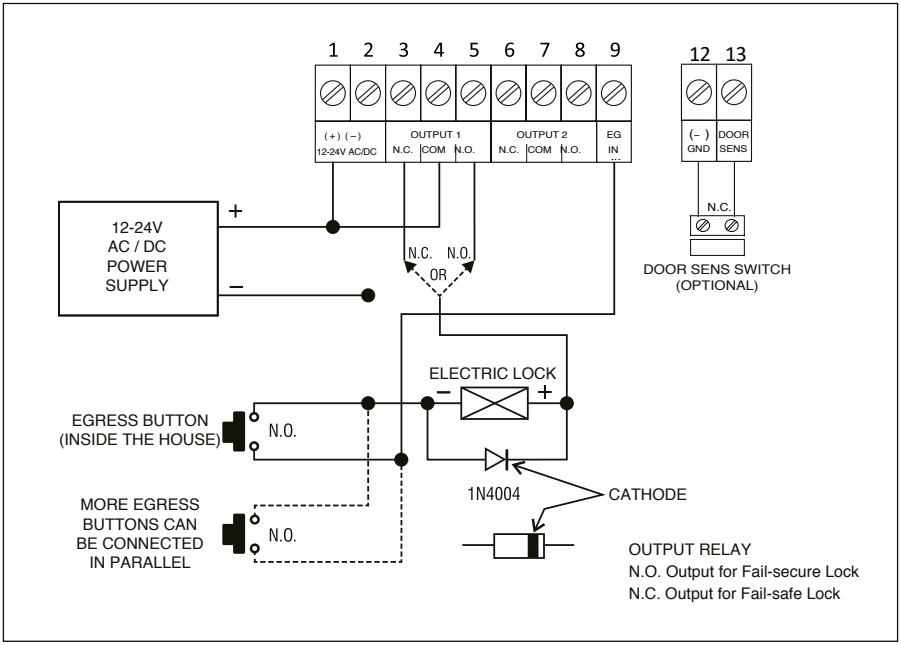

NOTE:

- Connect the 1N4004 as close as possible to the lock in parallel with the lock power terminals to absorb the back EMF to prevent it from damaging of the keypad.
- To avoid Electro-Static-Discharge from interfering with the operation of the keypad, always ground the (–) GND terminal of the keypad to earth.
- The DOOR LED lights up in Green during the door lock is open.
- Connection of the door sensing switch is optional.
  The keypad will provide the following functions after it is equipped on door:
  a) Door Auto Re-lock
  b) Door Forced-open Warning
  c) Door Propped-up Warning
- Always connect **DOOR SENS** terminal to (-) ground if not used.

2) BASIC WIRINGS FOR DOOR LOCK OPEN AND ALARM ARM-DISARM CONTROL

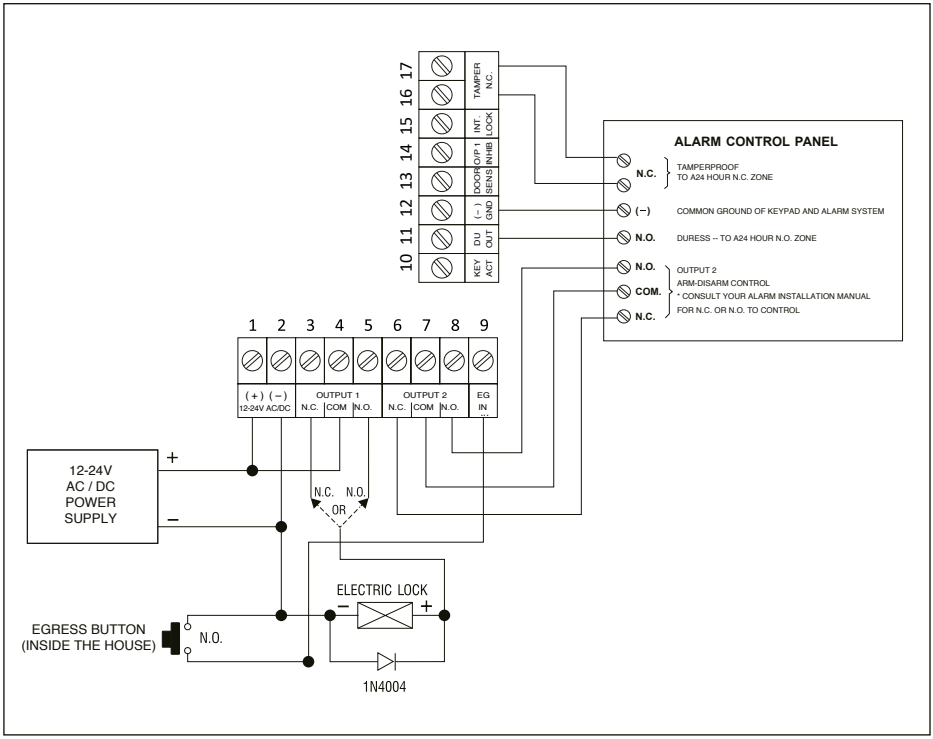

NOTE:

- The door lock function is exactly the same as like the Application Example (1).
- Relay Output 2 is used for Alarm Arm-Disarm Control.
  Please consult your alarm control panel manual for the appropriate output contact and the operation mode for the control; such as N.O. or N.C. contact, and Momentary or Start / Stop mode are required.
- Connect the Tamper Switch to a 24 hour N.C. zone and the Duress output to a 24 hour N.O. zone for tamperproof and emergency reporting.
- Connect the common ground to link up the keypad and the alarm control panel to achieve the logical functions is necessary.
- Please also see the NOTE stated in Application Example (1) for the common information.

3) BASIC WIRINGS OF AN INTER-LOCK SYSTEM USING TWO KEYPADS

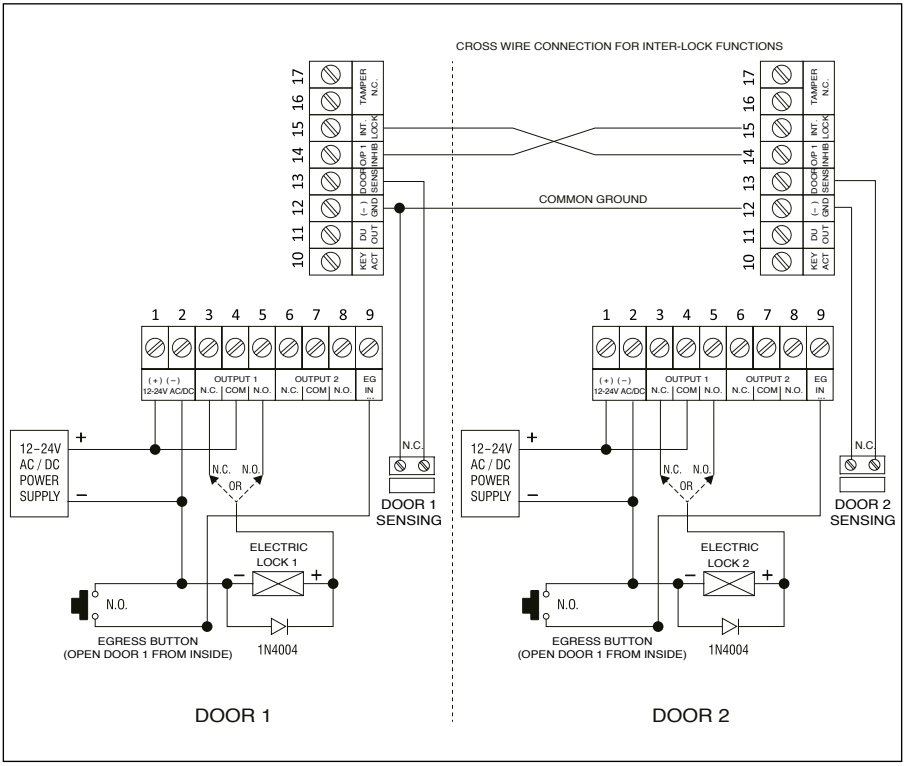

An inter-lock system needs two door controllers.
This application example uses two keypads with simple cross wire connection on their "**Output 1 INHIBIT**" and "**Inter-lock Control Output**" terminals.
It is necessary to link up the "**(–) GND**" terminals of the two keypads as common ground to achieve the inter-lock logical functions.

- Use keypad to open the door from outside.
- Press egress button to open the door from inside.
- Connect the door magnetic sensors on the door 1 and door 2 to monitor their positions.
- During the time that door 1 is open, then, door 2 is forced to keep closed, or vice versa.
- Relay output 2 is independent and has nothing concern with the inter-lock system.
  It may be used for other applications, such as controlling security systems, automatic operators etc.
- Please also see the "NOTE" stated in the Application (1) and (2) for the common information.

APPLICATION HINTS FOR THE AUXILIARY FACILITIESKEYACTTAMPERN

(A) TAMPER N.C.

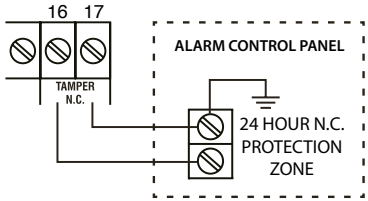

The tamper switch is Nomally Closed while the keypad is secured on gang box.
It is open when the keypad is removed from the gang box.
To prevent sabotage, connect these terminals in series with a 24 hour N.C. protection zone of an alarm system if required.

(B) DOOR SENS

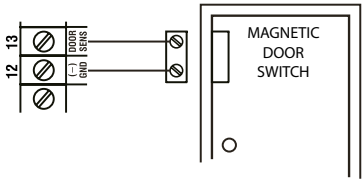

With the help of a Normally Closed door position sensor (usually a magnetic door swithch) on the door to set up the following functions:

a) **Door Auto Relock**-- The system will immediately relock the door after a valid access has been gained to prevent "tailgate" entries.

b) **Door Forced-open Alarm**-- The keypad will generate alarm instantly if the door is forced to open.
Enable the function with Programming Option 801.

c) **Door Propped-up Alarm**-- The keypad will generate alarm if the door is left open longer than the pre-set delay time.
Enable the function with Programming Option 9 with time of 1 to 999 seconds possible.

d) **Inter-lock Control**-- When the door is open, the interlock output of the keypad will give a (–) command to stop the other keypad in an inter-lock system.

(C) KEY ACTIVE

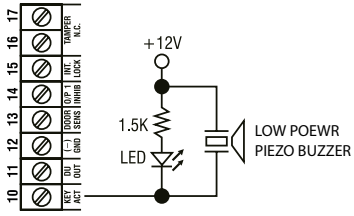

OR

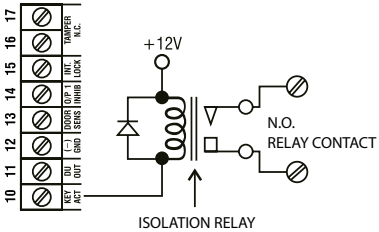

The Key Active Output will switch to (–) ground for 10 seconds whenever a key is touched. You may use it to turn ON an LED lamp and / or a small buzzer to notify a guard; or to energize a relay to switch ON lights or trigger an CCTV Camera to start recording.

- Make sure that the relay for switching ON lights has high enough isolation between high voltage and low voltage to prevent damage of the keypad.
- Only one connection option is recommended. Make sure the sink current does not exceed the maximum rating of 100mA.
- External power supply and isolation relay are strictly necessary in driving high power device, such as lights

(D) DURESS OUTPUT

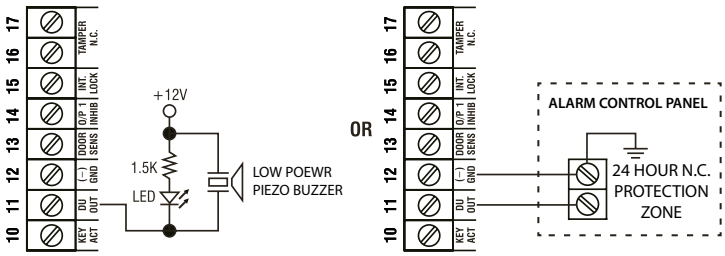

The Duress Output will switch to (–) ground when duress code is entered.
You may use it to turn ON an LED lamp and / or a small buzzer to notify a guard; or connect it to a 24 hour Normally Open protection zone of an alarm system.

- Only one connection option is recommended.
  Make sure that the sink current does not exceed the maximum rating of 100mA

(E) OUTPUT 2

(i) Shunting an N.C. Zone

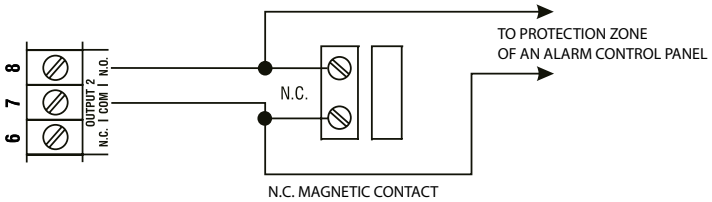

- Use the Normally Open (N.O.) output contact to shunt a Normally Closed (N.C.) protection zone of an alarm system.
- Set output contact to Start / Stop Mode (Programming Option 51).

(ii) Alarm System Arm-Disarm Control

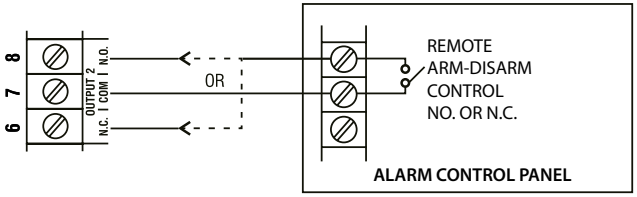

- Use the (N.O.) or (N.C.) output contact to make arm-disarm control of an alarm system
- Consult your alarm control panel manual for the appropriate output contact to be used in arm-disarm control
- Usually set output 2 to Momentary mode (Programming Option 501) for multi station systems and Start / Stop mode (Programming Option 51) for single station ststems

(F) DOOR BELL

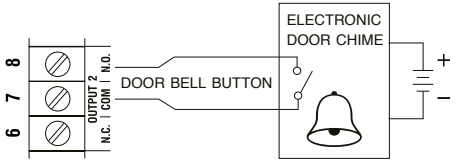

The Door Bell terminal is a Normally Open relay contact with the power rating of 30VDC/1A. It is prepared for triggering of a door chime.

AUXILIARY INFORMATION

- **DRY CONTACT**
  A dry contact means that no electricity is connected to it.
  It is prepared for free connections. The Relay Output contacts provided in this keypad system are dry contacts.
- **N.C.**
  Normally Closed, the contact is closed circuit at normal status.
  It is open circuit when active.
- **N.O.**
  Normally Open, the contact is open circuit at normal status.
  It is closed circuit when active
- **TRANSISTOR OPEN COLLECTOR OUTPUT**
  An open collector output is equivalent to a Normally Open (N.O.) contact referring to ground similar to a relay contact referring to ground.
  The transistor is normally OFF, and its output switches to ground (-) when active.
  The open collector can only provide switching function for small power but it is usually good enough for controlling of an alarm system.
  The Duress, Inter-lock and Key Active/Alarm Outputs of the keypad are open collector outputs.

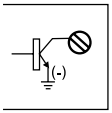

OPEN COLLECTOR OUTPUT ----
Output switches toground when activated

EQUIVALENT

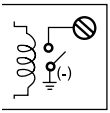

N.O. CONTACT OUTPUT ----
Output switches toground when activated

1ª edizione 05/2021
cod. 2G40002515

CERTIFIED MANAGEMENT SYSTEMS

www.comelitgroup.com
Via Don Arrigoni, 5 - 24020 Rovetta (BG) - Italy

Comelit®
Passion. Technology. Design.