ALLEGION™

Electronic Access Control

Q4 2024 Edition

IVES | LCN | SCHLAGE | VON DUPRIN

US.Allegion.com

Thank you for choosing Allegion™ electronic access control products. This catalog contains overviews and technical specifications. In the back of the catalog you will find wiring and riser diagrams for a number of products.

The electronic security industry is ever-changing. In order to make sure that you have the most current and up to date product information, we recommend that you register your catalog. Go to us.allegion.com/eac to register. By registering and providing your email address, you will be notified each time Allegion releases an updated version of the catalog as well as other product and solution information from Allegion.

Additional Resources

Product Information & Learning

Allegion Website
www.allegion.com/us

Schlage Commercial Website
commercial.schlage.com

Von Duprin Website
vonduprin.com

LCN Website
lcnclosers.com

I Dig Hardware Blog
www.idighardware.com

Online courses
https://us.allegion.com/en/home/training.html

Application & Installation Videos
https://us.allegion.com/en/home/training-videos.html.html#top

YouTube
Schlage Security Channel

Overtur Estimate & Order
https://discover-overtur.allegion.com/

Integrator Page on Us.Allegion.com
https://us.allegion.com/en/solutions/by-role/systems-integrator-solutions.html

Customer Care, Sales & Technical Support

1-877-671-7011

Schlage Electronic Locks & System Components (Electromagnetic Locks, Power Supplies & System Accessories)
Electronic_Lock_TechProdSupport@allegion.com

Readers & Credentials
Readers_Credentials_Biometrics_TechProdSupport@allegion.com

Von Duprin Electronics (Power Supplies, Electric Strikes, Delayed Exit System, Electrical Power Transfer)
Exits_TechProdSupport@allegion.com

Engage™ Web & Mobile Apps, Schlage Mobile Bluetooth® Credentials
Engage.Tech.Prod.Support@allegion.com

ISONAS Pure Access & ISONAS Hardware
Isonas.Tech.Prod.Support@allegion.com

Support

Online Schlage Electronics Support
https://us.allegion.com/en/home/support/library.html

Technical Library
https://us.allegion.com/en/home/support/library.html

Allegion How-To Web App
https://instructions.allegion.com/instr/418/25835

ALLEGION

Electronic Access Control Catalog

Open Architecture Products & Solutions

Table of Contents

Credentials

005388 Credentials Introduction
013465 Schlage Mobile Bluetooth® Credentials
013287 Mobile Student ID
015583 MIFARE® DESFire® Credentials
015584 MIFARE Classic® Credentials
005426 Proximity Credentials
011900 Credentials Compatibility Guide

Electronic Locking Solutions

015893 Electronic Locking Solutions Introduction

AD Series Locks & Accessories

004446 AD-400 Networked Wireless Electronic Lock
013214 AD-402 FIPS 201-2 Integration Ready Networked Wireless Electronic Lock
004448 AD-300 Networked Hardwired Electronic Lock
004869 AD-302 FIPS 201-2 APL Listed Networked Hardwired Electronic Lock
004442 AD-200 Standalone Electronic Lock
009820 AD-201 PIV/PIV-I Compatible Standalone Electronic Lock
004436 AD-250 Standalone Electronic Lock
004382 AD Series Exit Trim Compatibility
010432 AD Series & CO Series Lever and Cylinder Compatibility
004447 PIM400-485 Panel Interface Module for RS-485 Communication
004441 PIM400-TD2 Panel Interface Module Wiegand or Clock & Data Communication
005131 PIM400-1501-LC Sixteen Door Intelligent Controller
004094 TK400 AD Series Wireless Test Kit
004096 WPR400 AD Series Wireless Portable Reader
004014 WRI400 Wireless Reader Interface
004013 GCK400 & ECK400 Wireless Gate Control Kits and Elevator Control Kits
004095 ANT400-REM Remote Antennas for Wireless System
004097 RLBD AD Series Dry Contact Relay Board
004015 REPTR400 Wireless Repeater Kit
013622 Schlage Utility Software (SUS)
003940 Schlage Express™ Offline Access Control Software
009396 Schlage Express™ Compatibility Matrix

CO Series Locks & Accessories

004186 CO-100 Standalone Electronic Lock
004185 CO-200 Standalone Electronic Lock
004183 CO Series Exit Trim Compatibility
010432 AD Series & CO Series Lever and Cylinder Compatibility
013622 Schlage Utility Software (SUS)
003940 Schlage Express™ Offline Access Control Software
009396 Schlage Express™ Compatibility Matrix

ENGAGE™ Family Locks & Accessories
010409 NDE Mobile Enabled Wireless Cylindrical Lock
011389 LE Mobile Enabled Wireless Mortise Lock
013616 Schlage Mobile Enabled Retrofit Kits
013252 Schlage Control® Mobile Enabled Deadbolt & Interconnected Lock
011168 MT20W Credential Enrollment Reader
010842 GWE ENGAGE™ Gateway with IP (PoE) & RS-485 Communication
013210 TKE ENGAGE™ Test Kit
015657 ENGAGE™ Mobile App for Device Commissioning
011427 ENGAGE™ Cloud-Based Web & Mobile Applications

XE360™ Series Locks & Exit Trim
015588 XE360™ Series Tubular Locks
015589 XE360™ Series Mortise Locks
015590 XE360™ Series Exit Trim

Electromechanical Solutions
005024 Electromechanical Solutions Introduction

Electrified Locks
004998 L Series Electrified Mortise Lock
004999 ND Series Electrified Cylindrical Lock

Exit Devices - Electrical Options
006586 QEL Electric Latch Retraction
015518 QEL Electric Latch Retraction Conversion Kits
013791 Emergency Secure Lockdown (ESL)
013467 M996L/L-BE Motorized Breakaway Lever Trim
011898 Remote Undogging (RU) & Remote Monitoring (RM)

Delayed Egress/Alarmed Exits
010942 CHEXIT, RCM & DE5300

Monitor Strikes
010118 Monitor Strikes

Door Control - Electrical Options
Automatic Operators
010112 Electrohydraulic Automatic Operators
010113 Electromechanical Automatic Operators
Sentronics (Fire & Life Safety)
010115 Fire & Life Safety Sentronic Closer/Holders
Actuators & Sensors
010114 Actuators & Sensors

Readers
005025 Readers Introduction
013251 Mobile Enabled Multi-Technology Readers
005354 Multi-Technology Readers
013788 Single Technology Readers
004256 FIPS 201 Compliant Readers
009621 Reader Accessories
010523 MT20 Multi-Technology Enrollment Reader
004250 SERIII-W Scramble Keypad
004252 SEKPDWG & SEKPDMGW Essex Electronic Keypads
010175 OEM 200 Module

Reader Controllers
013787 Schlage Reader Controller Introduction
013614 RC Multi-Technology Reader Controller
013623 Pure IP™ Reader Controller Accessories
011910 CTE ENGAGE™ Single Door Controller with Multi-Technology Reader
004016 CT5000 Offline Controller

System Components
005028 System Components Introduction

Electric Strikes
010151 4200 Series Electric Strikes
005009 5100 Series Electric Strikes
005282 6100 Series Electric Strikes
005368 6200 Series Electric Strikes
003242 6300 Series Surface Mount Electric Strikes
009011 6400 Series Modular Strike

Electromagnetic Locks
M400 Series
004204 M490/492 Electromagnetic Locks
004205 M450/452 Electromagnetic Locks
004206 M420/422 Electromagnetic Locks
004158 M490G Electromagnetic Gate Lock
004762 M490DE Delayed Egress Electromagnetic Lock
Specialty
004160 GF3000 Mortise Mounted Shear Lock
004159 GF3000 Surface Mounted Shear Lock
004157 320M Mortise Mount Miniline™ Electromagnetic Lock
009007 M390RFK Electromagnetic Locks

Power Supplies
PS900 Series Power Supplies
004193 PS906 6 Amp Power Supply
004194 PS904 4 Amp Power Supply
004195 PS902 2 Amp Power Supply
004101 PS914 4 Amp Power Supply (Von Duprin®)

System Component Accessories
Pushbuttons
003910 620/631 Series Heavy Duty Pushbuttons
003911 700 Series Pushbuttons
003906 740 Series Emergency Break Glass Release

003912 660 Series Concealed Remote Button

Keyswitches

003907 650 Series Keyswitches

Request-To-Exit Bars

003909 672 Series TouchBar

003904 692 Series SmartBar™

Power Transfers

010106 Electric Power Transfer

010116 Electrified Hinge

005006 Armored Door Cords With Caps

Monitoring Stations & Consoles

005007 800/801 Series Remote & Local Monitoring Stations

005004 8200 Series Remote Monitor & Control Console

Other

003908 SCAN II™ Passive Infrared Motion Sensors

003905 1910 Electronic Horns

005005 Door Position Switches

013632 FSS1 High Security Door Monitoring Sensor

005011 PB405 & PB405S Electrified Deadbolts

010152 442S Cabinet Lock

Appendix

005138 Appendix Introduction

Wiring Diagrams

Access Control

105234 Pair of RX EL with MT15 Reader

112131 Pair QEL & MT156 Reader

105349 Single AD-300 Integrated Partner

105348 Single AD-300 PIB300 Wiegand

105351 Single PIM 485 Integrated Partner

105350 Single PIMTD2 Wiegand

112121 CO-100 with Remote Pushbutton

109439 Single with 99 Exit & FSE 6111 E-Strike

109440 4 Singles with EL Panic Bars & Remote Push Button

109444 Pair with ELs & Push Button

109445 Pair with Fail Safe E996L & Push Button - Fire Rated

109499 Single with CT5000 & EL Panic

112133 Single with QEL, 621AA Push Button – Fire Rated

109550 Single with EL & Push Button

109551 Pair of EL & Push Button

109552 Single EL with Push Button – Fire Rated

109553 Pair EL with Push Button – Fire Rated

113738 Single Door, RC Controller, Falcon E-lock

113739 Single Door, RC Controller, RX EU ND lock

113740 Pair of Doors, RC Controller, MEL Exit

113749 Single Door, RC Controller, FSE CS450/750 E-Strike

113750 Single Door, RC Controller, FSE MDS100 E-Strike

113751 Single Door, RC Controller, FSE RS200/300 E-strike

113752 Pair of Doors, RC Controller, RS200/300 E-strike

113753 Single Door, RC Controller, FSE MDS100 E-strike, CSW-100 PB

113754 Single Door, RC Controller, FSE NC450 E-strike

113755 Single Door, RC Controller, RX QEL Exit

113762 Single Door, RC Controller, RX EU L9000 E-lock

113763 Single Door, RC Controller, RX MEL Exit

113764 Single Door, RC Controller, RX 25

113765 Pair of Doors, RC Controller, RS200/300 E-Strike, Exits with Mullion

113766 Pair of Doors, RC Controller, MEL One Leaf Only

113767 Pair of Doors, RC Controller, RX MEL Both Leaves

113768 Pair of Doors, RC Controller, RX MEL 9500 AO

113769 Single Door, RC Controller, MG Maglock, 620 DA PB - with Fire Alarm Connection

113770 Single Door, RC Controller, TB Touchbar, MG Maglock, 620DA PB - with Fire Alarm Connection

113771 Single Door, IP Bridge, FSE MDS100 E-strike

113772 Single Door, IP Bridge, EU ND Lockset

113773 Single Door, IP Bridge, MEL/QEL Exit

113774 Single Door, IP Bridge, RX MEL/QEL Exit

113775 Single Door, IP Bridge, MG Maglock - with Fire Alarm Connection

Touchless Openings – with LCN® & Falcon Automatic Operators

113517 Single Door, FSE 6211 E-strike, LCN 9500 AO

113518 Single Door, RX QEL Panic, LCN 9500 AO, CTE

113520 Single Door, FSE E-strike, LCN 9500 AO, CTE

113521 Single Door, Falcon 8200 AO Non-Latching Door

113522 Pair of Doors, QEL Pair, LCN 9500 AO with Sensors

113714 Pair of Doors, RX LC QEL Pair, LCN 4600, Access Control by Others

113715 Pair of Doors, RX LC QEL Pair, LCN 9500, Access Control by Others

113716 Single Door, LCN 9131 AO, Touchless Actuators - Non-Latching Door

113717 Single Door, LCN 4600 AO, MTB Reader, Access Control by Others

Doors with Automatic Operators – LCN® & Falcon

104970 Double Doors with EL & LCN 4600 AO

104972 Single Electric Strike with LCN 4600 AO

104968 2 Single Doors with LCN ES7982 AO
109463 Pair EL with 4600
109464 Single with 99 & Fail Secure 6111 E-strike
113740 Pair of Doors, RC Controller, MEL Exit, 4600 AO
113752 Single Door, RC Controller, FSE RS200/300 E-strike, 4600 AO
113768 Pair of Doors, RC Controller, RX MEL, RX Exit, 9500 AO One Leaf Only

Doors with Automatic Operators – Generic

109441 Single with EL & Generic Auto Operator
112132 Single QEL with Auto Operator & Access Control

Security Interlocks

104967 2 Single Doors with M400 Mag Locks Security Interlock - with Fire Alarm Connection
109438 2 Single Doors with M400 Mag Locks, Security Interlock - with Fire Alarm Connection
109442 2 Single Doors with M400P Mag Locks & Access Control, Security Interlock - with Fire Alarm Connection

Safety Interlocks

109443 2 Pairs Safety Interlock with M4X2P Mag Locks - with Fire Alarm Connection
109437 2 Door Safety Interlock with M400 P Magnetic Locks - with Fire Alarm Connection

Delayed Egress – CX Panic Bars

112289 CX Single Door with PS902 for CX Devices That Shipped After 08-24-15
112290 CX Pair with PS904 & Access Control For CX Devices That Shipped After 08-24-15

Delayed Egress – Delayed Egress Magnetic Locks

109498 Single Door with M490DEP Mag Lock & Access Control - with Fire Alarm Connection
109500 Pair Doors with M490DEP-2 Mag Lock & Access Control - with Fire Alarm Connection

Shared Spaces – 2 Door

109529 2 Single Doors with ND80 HDEL RX Locksets on Shared Restroom

Shared Spaces – 3 Door

109537 3 Single Doors with ND80 HD EL RX Locksets on Shared Restroom
112089 PoE+ CTE Basic Configuration with 5100 E-strike
112090 CTE with EL, PS914/2RS Fire Rated
112091 CTE, QEL with Sr Swing Auto Operator

Allegion, the Allegion logo, Chexit, ENGAGE technology, Guard-X, LCN, Schlage, Schlage Express, Schlage Express Cloud, SmartBar and Von Duprin are trademarks of Allegion plc, its subsidiaries and/or affiliates in the United States and other countries. All other trademarks are the property of their respective owners.

© 2024 Allegion plc
005391, Rev. 10/24

ALLEGION

Credentials

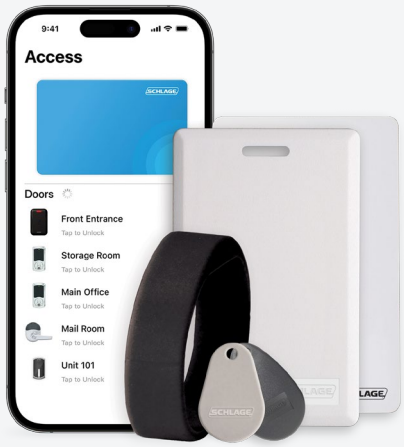

This section of the Electronic Access Control catalog covers mobile, smart, multi-technology and proximity credentials.

Overview

Schlage® offers credentials that fit every step along the continuum of your security strategy. Starting with the most basic key, to the most sophisticated smart or mobile credential. Every opening has its own needs and Schlage delivers a solution to fit them all.

The comprehensive credential offering from Schlage features mobile, smart, multi-technology and proximity technologies as well as a variety of form factors to meet the security needs of virtually any customer.

There are many types of smart cards on the market today, but unlike proximity, smart credentials are not all equal. Schlage continually strives to identify the best technologies in the world to ensure we're offering the best solutions for our customers to meet their continued goals for safety and security.

Benefits

- Simple
  - Credentials from Schlage provide unique advantages that help your business thrive and make doing business easier
- Secure
  - Schlage credentials using MIFARE® DESFire® offer our highest level of security through the use of mutual authentication, key diversification, and encryption
- Interoperable
  - Schlage credentials leverage NXP's open-architecture technology to enable the individual protection and management of various applications to meet the various needs of your ecosystem

Schlage Credential Services

At Schlage, we understand that credentials are the key to a successful access control plan. And we know that some solutions available in the market today can lock you into a proprietary path that limits your options in the future. That is why we offer Schlage Credential Services with programs that are designed to provide you with a whole new level of security, adaptability and flexibility.

Services include:

- Custom encryption keys
- Schlage standard encryption keys
- CardTrax™ Credential Sequencing Program
- Custom format consulting
- Custom artwork

Check out our Schlage Credential Services

Mobile Credentials

Allegion is an industry leader in mobile credential technologies and offers a broad portfolio of solutions that have been developed to meet specific customer requirements.

NFC mobile credentials in Apple Wallet® & Google Wallet™

NFC wallet-based credentials offer a premium experience by allowing users to add their credential to Apple Wallet® and Google Wallet™ and use their phone or watch just as they would their physical credential. Schlage enables our technology alliances to integrate and offer:

Student ID: By adding their campus ID to Apple Wallet or Google Wallet, mobile student ID provides a more secure and seamless experience around campus for university students, faculty and staff. Not only does it allow access control, but the ability to use their phone or watch to make payments and track balances on and off campus through the university's one-card system.

Resident Key: Offered through physical access control and Proptech systems, including Zentra from Allegion, mobile resident keys make resident life more convenient and secure. Property managers will also see added efficiencies and overall NOI growth.

Employee Badge: Mobile phones and smart watches are used for multiple purposes throughout a person's day and now using them to conveniently gain access to work spaces and other buildings is possible.

Schlage Mobile Bluetooth® Credential

Schlage Mobile Bluetooth credentials are simple to implement, easy to manage, convenient to use and ideal for multifamily and business applications. Available for both Apple and Android phones, this solution is available through Allegion technology alliances or for those using the ENGAGE access control system from Allegion.

Mobile Bluetooth credential

Mobile student ID

Smart Credentials

Schlage offers a variety of smart credential technology options to fit the needs and budget of almost every application. All smart credentials from Schlage are encrypted and secure, but also based on open, global standards, ensuring a future of headache-free flexibility and scalability.

Schlage smart credentials offer a single credential solution for secure physical and logical access and are available in a variety of form factors to fit any facility or business need, including ISO style cards, clamshell cards, wristbands, key fobs and adhesive patches. All Schlage smart cards are compliant with international standard ISO 14443.

Schlage 13.56 MHz contactless smart credentials are offered with the following industry standard MIFARE® technologies:

MIFARE® DESFire®

MIFARE DESFire delivers the perfect balance of security, speed and performance. Its open protocol design allows future seamless integration of other applications.

- Flexible file system/flexible memory organization
- Fast and secure data transmission
- 128 AES encryption used for authenticity, confidentiality and integrity
- Multiple memory options and form factors

MIFARE Classic®

Schlage credentials using MIFARE Classic technology are ideal for facilities with moderate security needs, and for businesses that want to use credentials to support multiple business functions.

- Simple, fixed memory structure
- Freely programmable memory
- Multiple memory options and form factors

Schlage Multi-Technology Credentials

Schlage multi-technology credentials combine 125 kHz proximity and 13.56 MHz smart technologies in one contactless card, simplifying access control solutions and offering flexibility for users. The credentials are compatible with proximity, smart and multi-technology card readers, allowing facilities ultimate flexibility. The open architecture design also ensures fast data transfer rates.

- Includes 125 kHz proximity and 13.56 MHz smart technologies in one credential
- Compatible with Schlage and other industry manufacturers' readers and electronic locks
- CardTrax Credential Sequencing Program helps keep track of card numbers at no additional cost
- Lifetime warranty against manufacturer's defects
- Custom artwork and laser engraving available
- Available in ISO style cards and can include a magnetic stripe
- Available in multiple memory capacities

Form Factors

From highly durable clamshell-style cards to the standard ISO style cards, keyfobs or PVC adhesive discs, Schlage offers a variety of credential formats to support a broad range of access control applications.

Clamshell card

ISO glossy card

Keyfob/thin keyfob

Wristbands

PVC adhesive patch

PVC adhesive disc

Schlage Proximity Credentials

Schlage proximity credentials offer a convenient access control solution for facilities with less demanding security needs. Schlage proximity credentials are compatible with most industry-leading proximity readers, allowing them to easily integrate with new and existing proximity access control systems.

- 125 kHz proximity technology available in multiple form factors
- Easily integrates into existing proximity systems
- CardTrax Credential Sequencing Program helps keep track of card numbers at no additional cost
- Lifetime warranty against manufacturer's defects
- Custom artwork and laser engraving available
- Available in ISO style cards and can include a magnetic stripe

This page intentionally left blank.

© 2024 Allegion plc
005388, Rev. 10/24

Mobile Bluetooth® Credentials

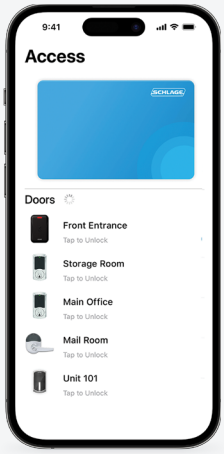

Overview

Schlage® Mobile Bluetooth® Credentials enable residents or staff members to utilize a mobile device instead of a physical badge to securely unlock an opening. Available for Apple and Android™ phones, the Schlage Mobile Access app is convenient and easy to use. Simply select a specific door listed on the app and the encrypted credential will be sent to the mobile enabled lock or reader.

Schlage Mobile Bluetooth Credentials feature best-in-class asymmetric encryption for added security and peace of mind. For added reliability and convenience, Schlage Mobile Bluetooth Credentials will work without an internet or cellular connection once they are downloaded from the cloud and access rights are synced to the devices.

At Schlage, we believe in building flexible and interoperable solutions that are rooted in open design standards. We recognize that Schlage locks and readers are managed by a wide variety of physical access control systems (PACS), that is why we have made software development tools available to industry leading providers. Please consult with your PACS provider to determine if Schlage Mobile Bluetooth Credentials have been integrated to work with your system.

Features & Benefits

Mobile Credential Users:

- Supports iOS and Android; available in the Apple App Store and Google Play Store
- Quick response from smart device to mobile enabled lock or reader
- Unlock an opening from a distance, a feature unique to Bluetooth mobile credentials[1]
- Best-in-class asymmetric credential encryption
- The built-in fingerprint or facial recognition features on the phone are used to confirm identity
- Works without internet connection or cellular service at the opening

Site Administrators:

- Compatible with mobile enabled hardware including Schlage Control®, MTB Readers, NDEB, LEB and XE360™ Series wireless locks and RC reader controllers
- No-Tour support for Schlage Mobile Bluetooth Credentials is available with select PACS providers
- Please consult with your PACS provider for specific support of features and capabilities

CYBERSECURITY
Learn about Allegion's commitment

1. Dependent on device. Schlage MTB Readers and RC reader controllers can be configured to read up to 30', Schlage Control, NDEB and LEB wireless locks are configurable and can read up to 15'.

Specifications	
Credential technology	Bluetooth Low Energy (LE) 2.4 GHz
Mobile device support	Click here or visit the Schlage Mobile Bluetooth Credentials page on commercial.schlage.com for a list of supported mobile phones
Opening modes	Using mobile app, select door to unlock, up to 30' range[1]
Security	• Mobile access credentials are protected by device lock screen • Over-the-air communication generates keypair for each session • Using the ECDH algorithm the exchanged public key and private key are used to create a session key that will be used to encrypt information for the session
Compatible devices	• Schlage XE360 Series wireless locks • Schlage Control mobile enabled deadbolt and interconnected lock • Schlage MTB mobile enabled multi-technology reader • Schlage MTB mobile enabled multi-technology reader with CTE single door controller in ENGAGE • Schlage NDE mobile enabled (B) cylindrical wireless lock with interior push button • Schlage LE mobile enabled (B) wireless locks • Schlage RC mobile enabled multi-technology reader controller

1. Dependent on device. Schlage MTB Readers and RC reader controllers can be configured to read up to 30', Schlage Control, NDEB and LEB wireless locks are configurable and can read up to 15'.

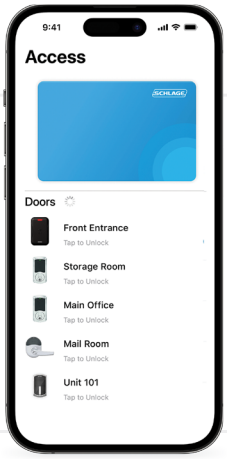

It's Easy to Use Schlage Mobile Bluetooth Credentials

- Click on link in the text message that you receive from Schlage, sent by your system administrator
- Download and install the Schlage Mobile Access app
- Add doors to your favorites list and tap to unlock
- Additional features and capabilities will vary; please visit us.allegion.com/alliances or consult your access control provider or your Schlage sales consultant for details

Schlage Bluetooth Mobile Credential License Options

One-Year Flexible License

SMA-ENGAGE-FLEX-1YR

The One-Year Flexible License enables facility administrators to grant visitors, temporary workers, and maintenance staff access when required. When a flexible credential is disabled, the remaining time on the license is retained and can be reused for your next visitor. Please note that One-Year Flexible Licenses also support the No-Tour feature.

Five-Year Fixed License

SMA-ENGAGE-FIX-5YR

The Five-Year Fixed License is the ideal credential solution for long-term residents or employees. The Five-Year License is our longest-term credential. Please note that Five-Year Licenses do not support the No-Tour feature and cannot be reassigned.

Allegion, the Allegion logo, Schlage and the Schlage logo are trademarks of Allegion plc, its subsidiaries and/or affiliates in the United States and other countries. All other trademarks are the property of their respective owners.

© 2024 Allegion plc
013465, Rev. 10/24

Mobile Student ID

Overview

Mobile Student ID is the most secure way for students to get around campus with the ID they're used to carrying. This feature will allow students, faculty and staff at select universities to add their student ID cards to their Apple Wallet® or Google Wallet™.

Leveraging NFC technology and contactless readers, students are able to easily gain access and make payments around campus using Mobile Student ID.

Mobile Student ID is available to anyone on campus who uses a school ID card:

- Students
- Faculty
- Staff

To enable this capability on campus, all readers must support an NFC credential. Some examples of this include:

- Interior and exterior door access
- Dining hall and retail dining
- Bookstore and off-campus retailers
- Library, printing, laundry and vending
- Event ticketing
- Attendance tracking

Features & Benefits

- **Easy**
  Students expect to get around their campus with ease and school administrators want to provide a great experience for their students
- **Secure**
  Using NFC technology, Mobile Student ID is a more secure way to transact on campus; the mobile credential is stored directly on a user's device in the secure element
- **Private**
  Apple does not know where you go, what you bought, or how much you spend; everything is managed directly through existing one card and access control providers, just as with the plastic card
- Schlage offers a comprehensive portfolio of electronic hardware to accommodate every opening
  - AD Series electronic lock
  - MTB Mobile enabled multi-technology readers
  - NDE wireless cylindrical lock
  - LE wireless mortise lock

AD Series Electronic Lock

The AD Series was built from the ground up to provide more options, more functionality and more compatibility than any other electronic locking solution on the market today.

- Mortise, cylindrical and exit trim versions
- Adaptable reader heads
- Non-invasive installations for historic buildings and s ensitive areas
- Secure encrypted data transmission
- 200 feet range from transceiver/access panel
- Near real-time communication
- Reads multiple credential technologies including magnetic stripe, proximity, smart and NFC Mobile Student ID
- AD300 wired and AD400 wireless options
- Seamlessly integrates into On Guard

Mobile Enabled Multi-Technology Readers

The Schlage® MTB mobile-enabled, multi-technology readers are designed to simplify your access control solutions and eases the transition from an existing proximity system to a secure encrypted card technology or mobile solution at your own pace—without having to change readers.

- Compatible with Bluetooth® Low Energy and NFC-open smart devices
- Plug and play mode for straight out of the box functionality
- Limited lifetime warranty
- Ability to upgrade firmware on Schlage MTB readers through the ENGAGE™ mobile app or by OSDP

NDE & LE Wireless Locks

NDE and LE wireless locks support the transition to mobile on campus. They read proximity and smart credentials as well as mobile student IDs.

- Simplified installation by combining the lock, credential reader, door position sensor and request-to-exit switch all in one unit
- NDE fits mechanical ND door prep with minor modifications
- LE suites with Schlage mechanical and electrified L Series locks with many common parts

Accessories

For non-access control applications such as dining, POS - USB output, vending, or laundry, Schlage has hardware solutions to fit your needs.

Allegion, the Allegion logo, Schlage and the Schlage logo are trademarks of Allegion plc, its subsidiaries and/or affiliates in the United States and other countries. All other trademarks are the property of their respective owners.

© 2024 Allegion plc

013287, Rev. 01/24

MIFARE® DESFire® Credentials

Overview

MIFARE® DESFire® smart credentials offer the highest in physical security from Schlage and deliver the perfect balance level of security, speed and performance. Its open protocol design allows seamless integration of other applications in addition to access control, such as cashless vending, cafeteria services, transportation, secure printing and more. All MIFARE credentials from Schlage are encrypted and secure, but also based on open, global standards, ensuring a future of headache-free flexibility and scalability.

Encryption Key

- Configured with our default encryption key or with a custom key developed by Schlage Custom Encryption Key Service (SCEKS)
- Can be configured with encryption keys developed by NXP manufacturing partners

Schlage Credential Services

- Programmed with industry standard formats as well as Schlage CardTrax™ Credential Sequencing Program
- Custom bit format development
- Custom artwork

Hardware Interoperability

- MT and MTB multi-technology readers
- Schlage RC reader controllers
- All Schlage AD, NDE, LE, XE360 Series and Schlage Control® electronic locks
- See Compatibility Guide for additional details

Allegion, the Allegion logo, Schlage and the Schlage logo are trademarks of Allegion plc, its subsidiaries and/or affiliates in the United States and other countries. All other trademarks are the property of their respective owners.

Features & Benefits

- Flexible file system/flexible memory organization
- Fast and secure data transmission
- 128 AES encryption used for authenticity, confidentiality and integrity
- Available with single technology 13.56 MHz (new applications) or multi-technology 125 kHz + 13.56 MHz (migrating)
- Multiple memory options and form factors to fit any business need
- Open, standards-based platform easily accommodates applications of your choice
- Lifetime warranty against manufacturer's defects
- Compatible with all Schlage reader and electronic locks and most industry manufacturers' readers and electronic locks when a Schlage custom encryption key is used

Clamshell card

Wristbands

ISO glossy card

Keyfob/thin keyfob

PVC adhesive patch

PVC adhesive disc

Check out our Schlage Credential Services

Single Technology (13.56 MHz) Smart Credentials

Ideal for new installations, Schlage MIFARE® DESFire® contactless credentials utilizing high frequency (13.56 MHz) technology, offers the highest level of physical security and encryption, as well as the greatest level of flexibility and scalability for future-readiness.

13.56 MHz MIFARE Credentials						
Model number	8440	8540	8740	8443	8543	8643T
Credential type	Clamshell	ISO glossy white[1]	PVC adhesive patch	Clamshell	ISO glossy white[1]	Thin keyfob
Credential technology	MIFARE DESFire EV1[4]	MIFARE DESFire EV1[4]	MIFARE DESFire EV1[4]	MIFARE DESFire EV3[4]	MIFARE DESFire EV3[4]	MIFARE DESFire EV3[4]
Magnetic stripe	No	Yes[2]	No	No	Yes[2]	No
Dimensions (H x W x T)	3.37" x 2.125" x 0.075"	3.37" x 2.125" x 0.033"	3.37" x 2.125" x 0.033"	3.37" x 2.125" x 0.075"	3.37" x 2.125" x 0.033"	1.77" x 1.18" x .11"
Slot punch[3] (printed guide included on ISO cards)	Vertical (standard)	Vertical or horizontal (optional)	Vertical or horizontal (optional)	Vertical (standard)	Vertical or horizontal (optional)	Keyring
Memory capacity	4K byte/32k bit	4K byte/32k bit	4K byte/32k bit	4K byte/32k bit	4K byte/32k bit	4K byte/ 32k bit

Multi-Technology (125 kHz + 13.56 MHz) Smart Credentials

Highly secure, flexible and future-ready, Schlage multi-technology credentials combine 125 kHz proximity and 13.56 MHz MIFARE® DESFire® technologies into one contactless card. The credentials can be read by both proximity readers and smart readers, allowing customers to improve their existing legacy applications while migrating at their own pace.

125 kHz/13.56 MHz Multi-Technology Credentials			
Model number	8940	8943	8843T
Credential type	ISO glossy white[1]	ISO glossy white[1]	Thin keyfob
Credential technology	Proximity/MIFARE DESFire EV1[4]	Proximity/MIFARE DESFire EV3[4]	Proximity/MIFARE DESFire EV3[4]
Magnetic stripe	Yes[2]	Yes[2]	No
Dimensions (H x W x T)	3.37" x 2.125" x 0.033"	3.37" x 2.125" x 0.033"	1.77" x 1.18" x .11"
Slot punch[3] (printed guide included on ISO cards)	Vertical or horizontal (optional)	Vertical or horizontal (optional)	Keyring
Memory capacity	4K byte/32k bit	4K byte/32k bit	4K byte/32k bit

Limited lifetime warranty *- Credentials have a lifetime warranty against manufacturers defects. See sales policy for complete warranty details.*

1. ISO glossy white style credentials are made from composite material, are printable, and can include a magnetic stripe as an option.
2. Add M1 to the model number for a magnetic stripe when ordering. Vertical slot punch not available on magnetic stripe cards.
3. Add SPV (vertical) or SPH (horizontal) your credential order for a slot punch. Vertical slot punch comes standard on all clamshell order. Vertical and horizontal slot punch are optional on ISO cards. Vertical slot punch not available on magnetic stripe cards.
4. All Schlage MIFARE credentials comply with the 14443 ISO standard.

As we consolidate our DESFire® offering to standardize on EV3, please reference the latest price book for a cross reference guide when transitioning from EV1 or EV2.

© 2024 Allegion plc
015583, Rev. 10/24

MIFARE Classic® Credentials

Overview

Often viewed as the entry point into smart cards, Schlage MIFARE Classic® credentials are ideal for facilities with moderate secure needs, and for businesses that want to use credentials to support multiple business functions such as multifamily. These credentials protect your most sensitive data by utilizing extra layers of security protection, and can be used for many applications including transit, cashless vending, and cafeteria point of sale. All MIFARE® credentials from Schlage are encrypted and secure, but also based on open, global standards, ensuring a future of headache-free flexibility and scalability.

Schlage Credential Services

- Programmed with industry standard formats as well as Schlage CardTrax™ Credential Sequencing Program
- Custom bit format development
- Custom artwork and laser engraving

Hardware Interoperability

- MT and MTB multi-technology readers
- Schlage RC reader controllers
- All Schlage AD, NDE, LE, XE360™ Series and Schlage Control® electronic locks
- See Compatibility Guide for additional details

Features & Benefits

- Simple, fixed memory structure
- Freely programmable memory
- 3 DES encryption projects data being relayed between card and reader
- Available with single technology 13.56 MHz (new applications) or multi-technology 125 kHz + 13.56 MHz (migrating)
- Multiple memory options and form factors to fit any business need
- Open, standards-based platform easily accommodates applications of your choice
- Lifetime warranty against manufacturer's defects
- Compatible with Schlage (encrypted) and other industry manufacturers' readers and electronic locks (CSN only)

Clamshell card

Wristbands

ISO glossy card

Keyfob/thin keyfob

PVC adhesive patch

PVC adhesive disc

Check out our Schlage Credential Services

Single Technology (13.56 MHz) Smart Credentials

Ideal for new installations for facilities with moderate security needs, Schlage MIFARE Classic® contactless credentials utilize high frequency (13.56 MHz) technology. These credentials offer more security compared to proximity, multiple memory options and form factors plus a simple, fixed memory structure.

13.56 MHz MIFARE Credentials						
Model number	9420, 9451	9520, 9551, 9558	9651	9651T	9351	9751, 9758
Credential type	Clamshell	ISO glossy white[1]	Keyfob	Thin keyfob	Silicone wristband	PVC adhesive patch
Credential technology	MIFARE Classic[4]	MIFARE Classic[4]	MIFARE Classic[4]	MIFARE Classic[4]	MIFARE Classic[4]	MIFARE Classic[4]
Magnetic stripe	No	Yes[2]	No	No	No	No
Dimensions (H x W x T)	3.37" x 2.125" x 0.075"	3.37" x 2.125" x 0.033"	2" x 1.24" x 0.38"	1.77" x 1.18" x .11"	0.63" x 7.68" x 0.295"	3.37" x 2.125" x 0.033"
Slot punch[3] (printed guide included on ISO cards)	Vertical (standard)	Vertical or horizontal (optional)	Keyring	Keyring	N/A	Vertical (optional)
Memory capacity; application sectors	2.5k bit; 5 sectors 1K byte/8k bit; 16 sectors	2.5k bit; 5 sectors 1K byte/8k bit; 16 sectors 4K byte/ 32k bit; 40 sectors	1K byte/8k bit; 16 sectors	1K byte/8k bit; 16 sectors	1K byte/8k bit; 16 sectors	1K byte/8k bit; 16 sectors 4K byte/32k bit; 40 sectors

Multi-Technology (125 kHz + 13.56 MHz) Smart Credentials

Particularly useful for facilities with moderate security needs during migration, Schlage multi-technology credentials combine 125 kHz proximity and 13.56 MHz MIFARE Classic® technologies in one contactless card. This flexibility allows customers to economically improve security of existing legacy applications to more secure MIFARE technology over time.

125 kHz/13.56 MHz Multi-Technology Credentials			
Model number	9951	9958	9691T
Credential type	ISO glossy white[1]	ISO glossy white[1]	Thin keyfob
Credential technology	Proximity/MIFARE Classic[4]	Proximity/MIFARE Classic[4]	Proximity/MIFARE Classic[4]
Magnetic stripe	Yes[2]	Yes[2]	No
Dimensions (H x W x T)	3.37" x 2.125" x 0.033"	3.37" x 2.125" x 0.033"	1.77" x 1.18" x 0.11"
Slot punch[3] (printed guide included on ISO cards)	Vertical or horizontal (optional)	Vertical or horizontal (optional)	Keyring
Memory capacity	1K byte/8k bit; 16 sectors	4K byte/32k bit; 40 sectors	1K byte/8k bit; 16 sectors

Limited lifetime warranty *- Credentials have a lifetime warranty against manufacturers defects. See sales policy for complete warranty details.*

1. ISO glossy white style credentials are made from composite material, are printable, and can include a magnetic stripe as an option.
2. Add M1 to the model number for a magnetic stripe when ordering. Vertical slot punch not available on magnetic stripe cards.
3. Add SPV (vertical) or SPH (horizontal) your credential order for a slot punch. Vertical slot punch comes standard on all clamshell order. Vertical and horizontal slot punch are optional on ISO cards. Vertical slot punch not available on magnetic stripe cards.
4. All Schlage MIFARE credentials comply with the 14443 ISO standard.

Allegion, the Allegion logo, Schlage and the Schlage logo are trademarks of Allegion plc, its subsidiaries and/or affiliates in the United States and other countries. All other trademarks are the property of their respective owners.

© 2024 Allegion plc
015584, Rev. 10/24

Proximity Credentials

Overview

Schlage® proximity credentials provide a convenient access control solution for facilities with less demanding security needs. Schlage proximity credentials are compatible with most industry-leading proximity readers, allowing them to easily integrate with new and existing proximity access control systems. From highly durable clamshell-style cards to the standard ISO style cards, keyfobs or PVC adhesive discs, Schlage offers a variety of credential formats to support a broad range of access control applications.

Features & Benefits

- 125 kHz proximity technology available in multiple form factors
- Easily integrates into existing proximity systems
- CardTrax™ account tracking program helps keep track of card numbers at no additional cost
- Lifetime warranty against manufacturer's defects
- Custom artwork and laser engraving available
- Available in ISO style cards and can include a magnetic stripe.
- Available in multiple memory capacities

Check out our Schlage Credential Services

125 kHz Proximity Credentials					
Model number	7410	7510	7610	7610T	7010
Credential type	Clamshell	ISO glossy white[1]	Keyfob	Thin keyfob	PVC adhesive disc
Credential technology	Proximity	Proximity	Proximity	Proximity	Proximity
Magnetic stripe available	No	Yes[2]	No	No	No
Dimensions (H x W x T)	3.37" x 2.125" x 0.075"	3.37" x 2.125" x 0.033"	2" x 1.24" x 0.38"	1.77" x 1.18" x .11"	1.38 or 35 mm diameter
Slot punch[3] (printed guide included on ISO cards)	Vertical (standard)	Vertical or horizontal (optional)	Keyring	Keyring	N/A
Warranty	Limited lifetime - Credentials have a lifetime warranty against manufacturers defects. See sales policy for complete warranty details.				

1. ISO glossy white style credentials are made from composite material, are printable, and can include a magnetic stripe as an option.
2. Add M1 to the model number for a magnetic stripe when ordering. Vertical slot punch not available on magnetic stripe cards.
3. Add SPV (vertical) or SPH (horizontal) your credential order for a slot punch. Vertical slot punch comes standard on all clamshell order. Vertical and horizontal slot punch are optional on ISO cards. Vertical slot punch not available on magnetic stripe cards.

Allegion, the Allegion logo, Schlage and the Schlage logo are trademarks of Allegion plc, its subsidiaries and/or affiliates in the United States and other countries. All other trademarks are the property of their respective owners.

© 2024 Allegion plc
005426, Rev. 01/24

Credentials Compatibility Guide

For Readers & Electronic Locks

	PR10 Proximity - Mini-Mullion	SM10 Smart - Mini-Mullion	MT11 | MT15 | MTK15 | MTMS15 | MTMSK15 Multi-Technology - Mullion | Single Gang	MTB11 | MTB15 | MTKB15 Mobile-Enabled Multi-Technology - Mullion | Single Gang
Mobile Wallet-Based NFC		●	●	●
Mobile Bluetooth® (LE)				●
Schlage MIFARE® DESFire® EV1/EV2/EV3		●	●	●
Schlage MIFARE Classic®		●	●	●
Schlage MIFARE Plus®		●	●	●
Multi-technology: Proximity and Schlage MIFARE® DESFire® EV1/EV2/EV3	●[1]	●	●	●
Multi-technology: Proximity and Schlage MIFARE Classic®	●[1]	●	●	●
Multi-technology: Proximity and Schlage MIFARE Plus®	●[1]	●	●	●
MIFARE® DESFire® EV1/EV2/EV3, MIFARE Classic®, and MIFARE Plus® CSN[3]		●	●	●
HID iCLASS®, iCLASS SE®, and Seos® secure application area[2]				
HID Seos® NFC mobile, secure application area[2]				
HID iClass®, iCLASS SE® CSN[3]		●	●	●
LEAF Custom Configuration (Cc) credentials		●	●	●
125 kHz Proximity	●	●	●	●
ISONAS™ Proximity	●		●	●
HID® Proximity[4]	●		●	●
GE/CASI ProxLite®	●		●	●
AWID® Proximity	●		●	●
LenelProx®	●		●	●
Personal Identification Number (PIN)			●	●
Magnetic stripe			●	
PIV and PIV-I		●	●	●

1. Proximity only.
2. Requires Si or SiK option. Si/SiK option does not support proximity credentials.
3. Card serial number only.
4. Proximity bit lengths greater than 37 not supported.
5. Excludes AD-250.
6. No Tour functionality requires minimum 1K byte/8k bit Schlage smart credential and MT20W enrollment reader.
7. Not compatible with Schlage MIFARE DESFire EV2 credentials.
8. Requires FMK reader.

Note: If your credential is not listed, please contact Allegion credential engineering services at ElectronicInsideSales@allegion.com.

Credentials Compatibility Guide

For Readers & Electronic Locks

	RC11 | RC15 | RCK15 Multi-Technology Reader-Controller - Mullion | Single Gang	MT20 (USB) or MT20W (Wi-Fi) Smart Enrollment	CO-200 Electronic Lock	AD Series Electronic Locks[5]	LE & NDE Mobile Enabled Wireless Locks[6]	Schlage Control® Mobile Enabled Smart Locks[6]	Schlage XE360™ Series Wireless Locks[6]
Mobile Wallet-Based NFC	●			●	●		●
Mobile Bluetooth® (LE)	●	●			●	●	●
Schlage MIFARE® DESFire® EV1/EV2/EV3	●	●		●	●	●[6]	●
Schlage MIFARE Classic®	●	●		●	●	●	●
Schlage MIFARE Plus®	●	●		●	●	●	
Multi-technology: Proximity and Schlage MIFARE® DESFire® EV1/EV2/EV3	●	●	●[1]	●	●	●[7]	
Multi-technology: Proximity and Schlage MIFARE Classic®	●	●	●[1]	●	●	●	
Multi-technology: Proximity and Schlage MIFARE Plus®	●	●	●[1]	●	●	●	
MIFARE® DESFire® EV1/EV2/EV3, MIFARE Classic®, and MIFARE Plus® CSN[3]	●			●	●		
HID iCLASS®, iCLASS SE®, and Seos® secure application area[2]				●	●		
HID Seos® NFC mobile, secure application area[2]				●	●		
HID iClass®, iCLASS SE® CSN[3]	●			●	●		
LEAF Custom Configuration (Cc) credentials	●	●		●	●	●	
125 kHz Proximity	●		●	●	●		
ISONAS™ Proximity	●		●	●	●		
HID® Proximity[4]	●		●	●	●		
GE/CASI ProxLite®	●		●	●	●		
AWID® Proximity	●		●	●	●		
LenelProx®	●			●	●		
Personal Identification Number (PIN)	●		●	●			
Magnetic stripe				●			
PIV and PIV-I	●	●		●[8]			

1. Proximity only.
2. Requires Si or SiK option. Si/SiK option does not support proximity credentials.
3. Card serial number only.
4. Proximity bit lengths greater than 37 not supported.
5. Excludes AD-250.
6. No Tour functionality requires minimum 1K byte/8k bit Schlage smart credential and MT20W enrollment reader.
7. Not compatible with Schlage MIFARE DESFire EV2 credentials.
8. Requires FMK reader.

Note: If your credential is not listed, please contact Allegion credential engineering services at ElectronicInsideSales@allegion.com.

Learn more about Schlage Credentials and Services

Learn more about Schlage readers

Learn more about Schlage electronic locks

Commercial.Schlage.com

© 2024 Allegion plc

011900, Rev. 10/24

ALLEGION

Electronic Locking Solutions

The AD Series

The AD Series was built from the ground up to provide more options, more functionality and more compatibility than any other electronic locking solution on the market today. The AD Series meets today's security needs while also easily adapting to future needs as they emerge. The AD Series is designed on an open architecture platform to provide users with enhanced flexibility and scalability, resulting in an investment that's every bit as secure as your facility.

The modular design of the AD Series creates an easy and affordable way to expand a security system and integrate emerging technologies over time and when budgets permit. Customers can easily upgrade readers or networking options – all without having to remove the lock from the door. And the wireless technology gives you the option to install access control on doors that have traditionally been difficult to wire while providing real-time monitoring and centralized lockdown capabilities. The AD Series was designed to be the right choice for today, and ready for whatever the future holds. With the AD Series you can be assured that your investment is every bit as protected as your facility.

The AD Series simplifies installation by combining the electrified lock, reader, door position switch, request-to-exit, and other status monitors together. A variety of electronic locking models are available which can be configured to meet the needs of most common applications across a building or a campus. Wireless accessories complement the locks and enable the same technology to be used beyond doors including elevators and parking gates.

- Broadest range of options, features, and capabilities in the Schlage portfolio
- Networked real-time wireless and wired, as well as standalone models
- Electronic Locking models to address cylindrical, mortise and exit trim applications
- Wireless accessories to address remote and hard to wire applications including elevators and parking gates
- Supports NFC mobile, smart (MIFARE®, MIFARE DESFire®), prox, mag stripe and keypad credentials
- Specific models available to support HID credentials[1] and FIPS and other government standards[2]
- Robust design; ideal for institutional and high abuse environments
- Adaptable credential and connectivity modules; upgrade to new technologies as needs change

1. Requires the Si or SiK reader module; see data sheet for specific support
2. Please see the AD-402, AD-302 or AD-201 data sheets for specific support

CYBERSECURITY
Learn about Allegion's commitment

CO Series

The CO Series is a reliable and proven solution backed by extensive testing and certification and the strong mechanical heritage of Schlage. It is ideal for applications that desire a cost-effective solution for basic security needs. Three different classifications are offered in the CO Series for standalone applications.

The CO Series provides the added security and convenience of electronic access control without the cost or complexity of a networked system. By providing electronic credentials you can minimize the number of mechanical keys issued which protects the integrity of key systems. Choose from basic PIN code access for a small number of users or a card-based system to serve a larger population of users.

- Offline, standalone models only
- CO-100 carries full outdoor rating
- Supports prox and keypad credentials

NDE Wireless Cylindrical Locks

The Schlage® NDE mobile enabled wireless cylindrical lock is designed to affordably extend electronic access control deeper into the building beyond traditional perimeter and high security openings. It can function in offline or No-Tour mode. It can also be connected over Wi-Fi for periodic check-ins or via the GWE gateway for real-time management.

The open architecture design allows the NDE to be managed by Allegion software or to be integrated into popular physical access control systems through our PACS Alliance program. This enables customers to choose the system that best fits their requirements and gives them the ability to move to a fully networked solution at any time.

The NDE is compatible with a wide range of mobile, smart and proximity credential technologies and can operate in storeroom, office, privacy, or apartment functions using its interior push button with indication.

NDE works within existing network architecture and can exist in the same EAC system as other wireless locks including Schlage Control®, AD-400 and LE.

- Networked real-time wireless, connected Wi-Fi and No-Tour offline modes of operation
- Designed for cylindrical applications; minimal modifications needed for installation on most doors
- Supports Bluetooth® and NFC mobile, smart (including MIFARE Classic®, MIFARE® DESFire®) and proximity credentials
- Specific model available to support HID® smart and NFC credentials[1]
- Ideal for commercial, multifamily and institutional environments

1. Requires the Si option; see data sheet for specific support

LE Wireless Mortise Locks

The Schlage® LE mobile enabled wireless mortise lock is designed to affordably extend electronic access control deeper into the building beyond traditional perimeter and high security openings. It can function in offline or No-Tour mode or as a networked lock with either periodic check-ins or real-time management.

The open architecture design allows the LE to be managed by Allegion software or to be integrated into popular physical access control systems through our PACS Alliance program. This enables customers to choose the system that best fits their requirements and gives them the ability to move to a fully networked solution at any time.

The LE is compatible with a wide range of mobile, smart and proximity credential technologies.

Featuring two sleek trim options with a broad range of decorative lever and finish choices. The LE can be ordered with LED indicator, interior push button, or deadbolt to enable storeroom, office, privacy, or apartment functions.

LE electronic wireless locks fit into existing network architecture and can work in the same EAC system as other wireless locks including Schlage Control®, AD-400 and NDE.

- Networked real-time wireless, connected Wi-Fi and No-Tour modes of operation
- Designed for mortise applications; minimal modifications needed for installation on most doors
- Supports Bluetooth® and NFC mobile, smart (including MIFARE Classic®, MIFARE® DESFire®) and proximity credentials
- Specific model available to support HID® smart and NFC credentials[1]
- Ideal for commercial, multifamily and institutional environments

XE360™ Series

The XE360™ Series is the latest wireless lock from Schlage and designed with the options, features, and style most looked for by multifamily properties - at an attractive price point. It operates in an offline or No-Tour environment and is integrated with Allegion and 3rd party PACS and Proptech systems. The XE360 Series supports the latest credential technologies and is available as Tubular, Mortise and Exit Trim. The innovative FleX Module™ allows the XE360 Series to be easily upgraded in the field to allow migration from an offline to networked solution and adapt to emerging trends in security and connectivity.

- No-Tour and offline options
- Models to address Tubular, Mortise and Exit Trim applications
- Supports Bluetooth® and NFC mobile and smart (including MIFARE Classic®, MIFARE® DESFire®) credentials
- Ideal for multifamily properties

1. Requires the Si option; see data sheet for specific support

Schlage Control® Smart Locks

The Schlage Control® mobile enabled smart lock was designed specifically for multifamily residence doors. It allows properties to offer convenient security to residents and intelligent efficiency to property managers. And, through support for Bluetooth® mobile credentials, Schlage is opening the door to any number of future possibilities.

Schlage Control mobile enabled smart locks allow residents to gain access using a smart credential or their smartphone. And without traditional keys to deal with, properties will save time and money in managing resident access.

The open architecture capabilities of Schlage Control offer properties the freedom to use the physical access control (PACS) or Proptech provider of their choice to manage security and extend the possibilities of their locks beyond access control.

- No-Tour, offline and networked real-time applications
- Available as a deadbolt or interconnected lock
- Two attractive styles and a broad selection of finishes and suited lever designs
- Ideal for multifamily properties
- Supports Bluetooth® and NFC mobile and smart (including MIFARE Classic®, MIFARE® DESFire®) credentials

© 2024 Allegion plc
015893, Rev. 10/24

AD-400

Networked Wireless Electronic Lock

Overview

AD Series electronic locks from Schlage® are designed to be modular and provide more options to choose from, more functionality in the lock, and more compatibility with existing access control systems. Its patented modular design allows the lock to be customized to fit the needs of an application now and changed to meet future needs without removing it from the door.

To simplify installation, the AD Series combines all the hardware components required at the door for a complete access control system into one integrated design that includes the electrified lock, credential reader, request-to-exit, and request-to-enter sensors, door position switch, tamper switch, and more.

The AD-400 wireless networked lock gives you many of the key benefits of a hardwired access control system—without the wires. This allows you to secure doors that were traditionally difficult to run wires to in the past and increase the security throughout your facility.

Encryption Key & Credential Interoperability

- Hardware configured with our default encryption key or custom key developed by Schlage Custom Encryption Key Service (SCEKS) including NXP, HID® and NFC
- Schlage MIFARE® DESFire® and MIFARE Classic® credentials
- NFC mobile credentials in Apple Wallet® and Google Wallet™
- HID iCLASS®, iCLASS SE® and SEOS® plastic and NFC mobile credentials
- Other competitive credentials (see the Credential Compatibility Guide)

Schlage Credential Services

- CardTrax™ credential format sequencing service offering industry standard formats
- Custom format development

Features & Benefits

- Open architecture platform - integrated into most popular physical access control systems through our PACS Alliance program
- Multi-technology credential compatibility includes Schlage MIFARE®, NFC mobile[1], and proximity
  - Optional support for HID® smart and NFC mobile credentials
- Panel interface options ensure seamless communication with the access control system
- Secure encrypted data transmission
- Unique communication protocols won't interfere with other wireless networks
- 'Wake up on Radio' feature enables centralized lockdown in less than 10 seconds while still optimizing battery life up to 2 years
- Non-invasive wireless installation for historic buildings and sensitive areas
- Wireless accessories available for remote, gate, elevator, and portable or temporary (mustering) applications

CYBERSECURITY
Learn about Allegion's commitment

1. Check with PACS provider for specific support of mobile credentials in Apple Wallet® and Google Wallet.™

Reliable Communications

Secure and reliable wireless communication with the Panel Interface Module (PIM) is accomplished using 900 MHz frequency. 900 MHz band enables longer transmission ranges because signal propagation with longer wavelengths travel a greater distance and better penetrate typical building construction – allowing for simplified system design.

Wake-Up on Radio

This feature enables implementation of wireless locks in applications where centralized lockdown or unlock is required. 'Wake Up on Radio' utilizes patent-pending technology to enable real-time activation at a remote battery-powered wireless lock. The technology is configurable from 10 to 1 second increments. When Wake-Up on Radio is used in critical applications, Dynamic Channel Switching should also be enabled.

Panel Interface Module (PIM400)

The PIM400 (sold separately) is required for communication between the AD-400 wireless lock and the access control panel, and can support up to 16 locks depending on your access control system.

Exterior

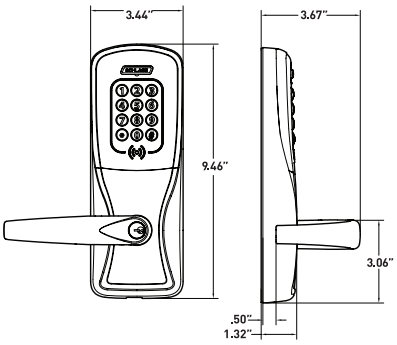

Interior

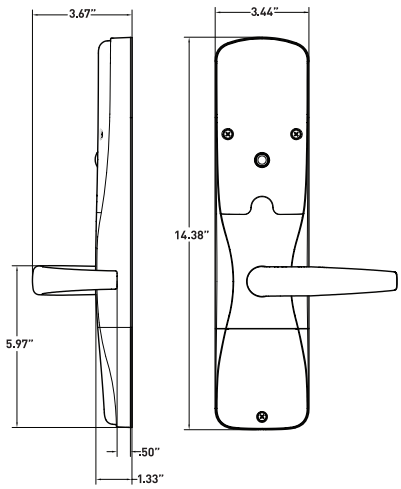

AD-400 Electronic Lock Specifications	
Modulation	900 MHz spread spectrum, direct sequence, 10 channels
Frequency range	902-928 MHz
Transmission/encryption	AES-128 bit key
Credential verification time	< 1 second[1]
Wake-up on radio	Responds to lock/unlock command from host in less than 10 seconds in battery powered applications (per field configuration)
Communication range	Up to 200 ft with obstructions (normal building construction), up to 1,000 ft clear line of sight
RF interference avoidance	Configurable dynamic channel switching
Data rate	RF: 40 kbps
Visual/audible communications	Tri-colored LED's and audible indicators (field configurable)
System interface	RS-485, Wiegand, or Clock & Data via PIM400 to host
Power supply	4AA, 8AA, 12 VDC or 24 VDC
Voltage range	4 VDC to 26 VDC
Max current requirement	Up to 250 mA
Battery life	Up to 2 yrs with 4AA
Operating temperature	Exterior: -31° to 151°F (-35° to 66°C) Interior: 32° to 120°F (0° to 49°C) (battery)
Operating humidity	0 - 100% non-condensing
Certifications	ANSI/BHMA A156.25; ANSI/BHMA Grade 1; UL 294; ULC S319; UL 10C 3 hour; FCC Part 15; Industry Canada (IC); ADA compliant; Cylindrical and mortise chassis only: TDI DR-464; DR-465; FL12400, FL4613, FL1592, FL13013, FL14482; Mortise chassis only: FL3905
Accessories	Panel Interface Module (PIM400), SUS-A Cable used with SUS Android mobile app, remote antennas for PIM400 to extend range, Dry Contact Relay Board (RLBD) may be required for supervised inputs (Wiegand systems)

Functions

- Storeroom[2]
- Office/classroom[2, 3]
- Privacy[3]
- Apartment[3]

Available Status Signals

- Lock/unlock status[4]
- Request-to-exit
- Door position
- Mechanical key override[3]
- Deadbolt position[3]
- Interior push button[3]
- Interior cover tamper guard[3]
- Battery status
- Communication status[3]
- Request-to-enter[3]

*The AD-400 has a number of field-configurable features and provides opening intelligence through status signals that can be monitored by access control software. Please consult one of our Physical Access Control Software (PACS) providers for **details** on specific features.*

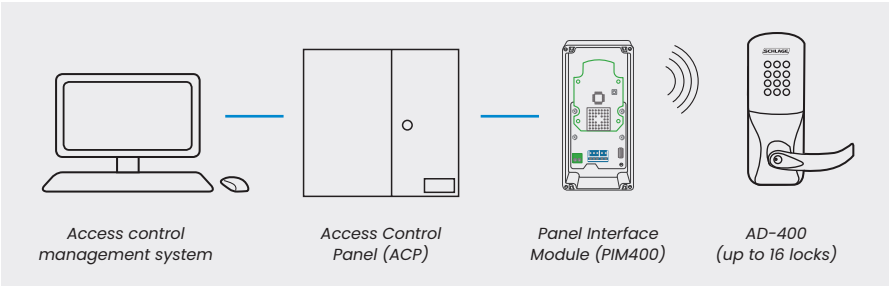

1. Lock requires less than 100 msec, response time does not include latency time of ACP.
2. Storeroom and office/classroom functions not available with mortise deadbolt option.
3. Consult your Physical Access Control Software (PACS) provider for specific scope of support. Interior pushbutton, mechanical key override, and deadbolt position are only available when linked via PIM400-485.
4. Software indicates lock/unlock status based on sequence of events, but cannot validate mechanical clutch position unless monitored on RS-485 connection.

Mechanical Specifications			
	Cylindrical	**Mortise**	**Exit Trim**
Handing	Handed to order, field reversible		
ANSI standard (meets or exceeds)	A156.25 locked outdoor A156.2 Series 4000 Grade 1	A156.25 locked outdoor A156.13 Series 1000 Grade 1	A156.25 locked outdoor A156.3 Grade 1
Door thickness	1-3/4" standard, 1-3/8" to 2-3/4" optional (available in 1/8" increments)		
Backset	Standard: 2-3/4" Optional: 2-3/8", 3-3/4", 5"	2-3/4" only	Defined by exit device
Latch bolt	Standard: 1/2" throw Optional: 3/4" throw	Standard: 3/4" throw Optional: 1" throw on mortise deadbolt	Provided by exit device
Levers	Pressure cast zinc, plated		
Strike	Standard: 1-3/16" lip, ANSI, 1-1/4" x 4-7/8" Optional: Additional configurations available, please see price book		Provided by exit device
Cylinder and keys	Schlage® 6-pin Everest 29 S123 keyway Conventional cylinder with two patented keys standard. Additional options available including SFIC, FSIC and competitor brands. See lever and cylinder compatibility data sheet.		

Standard Multi-Technology Reader Specification	
Credential technologies	Proximity (125 kHz), Smart (13.56 MHz) and Near Field Communication (NFC)
Standards	ISO 15693, ISO 14443
Read range	Proximity: up to 1.25"; Smart: up to .75"; NFC mobile: mobile device dependent
Proximity credential support	Schlage, ISONAS™, HID4, GE/CASI ProxLite®, AWID® and LenelProx®
Smart credential support	Secure sector: Schlage MIFARE Classic®, Schlage MIFARE Plus®, Schlage MIFARE® DESFire®, PIV and PIV-I[1,2] CSN only: HID iCLASS®, HID iCLASS SE®, Inside Contactless Pico Tag®, MIFARE Classic/Plus/DESFire, ST Microelectronics®, Texas Instruments Tag-It®, Phillips I-Code®
Mobile credential support	NFC mobile credentials in Apple Wallet® and Google Wallet™ [3]
Certifications	FCC, Industry Canada (IC), UL 294
Options	12 button, 3 x 4 matrix backlit keypad

Available AD Series Reader Modules

Multi-Technology

- Proximity
- Smart
- NFC mobile

KEYPAD option

Si with HID Support

- Smart
- NFC mobile

KEYPAD option

Magnetic Stripe (insertion)

KEYPAD option

Magnetic Stripe (swipe)

KEYPAD option

Keypad

1. FIPS 201-2 integration ready option available: The AD Series can be used in applications which require approval by the U.S. Federal Government under HSPD-12 for FIPS 201-2 compliance when installed as part of a tested and approved integrated solution. Please see the AD-402 data sheet or AD-302 data sheet for complete details.
2. 75 bit output format default. Configurable to other output formats.
3. Check with PACS provider for specific support of mobile credentials in Apple Wallet® and Google Wallet.™
4. Proximity bit lengths greater than 37 not supported.

Allegion, the Allegion logo, Falcon, Schlage, the Schlage logo, and Von Duprin are trademarks of Allegion plc, its subsidiaries and/or affiliates in the United States and other countries. All other trademarks are the property of their respective owners.

AD Series exit trim is compatible with Von Duprin 98/99 and 98/99XP (rim, mortise, SVR; and CVC, CVR on metal doors only), Von Duprin 22/22F (rim and SVR) and Falcon 25 (rim) exit devices from Allegion. The AD Series is also compatible with select rim exit devices from Sargent, Corbin Russwin, Yale, Dorma and Precision.

For Von Duprin and Falcon solutions, a low current request-to-exit switch (RX-LC or AE) is required. The part numbers are:

Von Duprin: 050281
Falcon: 650359

Refer to the AD Series Exit Trim Compatibility Guide for additional details.

Benefits of AD Series Multi-Technology Readers:

- Reads multiple brands of both proximity (125 kHz) and smart (13.56 MHz) technologies with single reader
- Compatible with NFC mobile credentials in Apple Wallet® and Google Wallet™ [3]
- Allows facility to migrate to more secure credential technologies over time and as budgets permit

Additional Readers

Si option with HID® support

Supports:

- Secure application area of HID iCLASS®, iCLASS SE®, Seos® smart credentials
- iCLASS Standard Key and Elite Keys
- HID NFC mobile credentials
- All Schlage MIFARE® and NFC mobile credentials

Does not support:

- Proximity
- Bluetooth® (BLE) mobile credentials

Magnetic stripe

- Available with choice of insertion or swipe style readers
- Triple track reader (1, 2 or 3), field configurable
- ABA, ISO76XX standard

Keypad

- Backlit keypad
- 12 button, 3 x 4 matrix

Ordering Information

Available through one of our GSA schedule 84 approved distributions. BAA options available.

AD - 400 - CY - 70 - MG - SPA - 626 - P6 - S123 - RH - 4B - 13-247 - 10-025 - 134

Series	Class	Chassis	Function	Reader	Lever Style	Finish	Key Cylinder	Keyway	Handing	Battery	Backset & Latch or Armored Front	Strike	Door Thickness
1	2	3	4	5	6	7	8	9	10	11	12	13	14

Standard options are indicated with a dot. See price book for specific configuration options.

3 Chassis

CY	Cylindrical
MS	Mortise
MD	Mortise deadbolt
993R	Exit trim – rim/CVC/CVR
993S	Exit trim – SVR
993M	Exit trim – mortise
993DT	Non-functioning dummy trim for exit

4 Function

40	Privacy
50	Office/classroom
60	Apartment
70	Storeroom

Lock function capabilities are determined by users access control system.

5 Reader

• KP	Keypad
MG	Magnetic stripe (insertion)
MGK	Magnetic stripe + keypad (insertion)
MS	Magnetic stripe (swipe)
MSK	Magnetic stripe + keypad (swipe)
MT	Multi-technology (125 kHz, 13.56 MHz, NFC)
MTK	Multi-technology + keypad (125 kHz, 13.56 MHz, NFC)
FMK	FIPS 201-1 compliant multi-technology + keypad (125 kHz and 13.56 MHz)
Si	HID support
SiK	HID support + keypad
DT	Dummy trim

6 Lever

ATH	Athens
BRK	Boardwalk
BRW	Broadway
LAT	Latitude
LON	Longitude
RHO	Rhodes
SPA	Sparta
TLR	Tubular

Available with tactile warning options.

7 Finish

605	Bright Brass
606	Satin Brass
612	Satin Bronze
619	Satin Nickel
625	Bright Chrome
• 626	Satin Chrome
626AM	Satin Chrome Antimicrobial
643e	Aged Bronze

8 Key Cylinder

• P6	Schlage 6-pin conventional key-in-lever cylinder

See price book for other SFIC, FSIC and less cylinder options available. Compatible with Schlage®, Sargent®, Corbin Russwin, Medeco® and Yale®.

9 Keyway

• S123	Everest 29

See price book for other available keyway options including restricted keyways in Primus XP high security cylinders and master keying.

10 Handing

• RH	Right handed
LH	Left handed

Field reversible.

11 Battery

• 4B	4AA
8B	8AA

12 Backset & Latch or Armored Front

• 13-247	Cylindrical: 2-3/4" backset deadlatch, square corner, 1-1/8" x 2-1/4"
• 09-663	Mortise: Armor front, 1-1/4" wide, square corner

See price book for mortise deadbolt and other backset and latch options or armor front options.

13 Strike

• 10-025	Cylindrical: 1-3/16" lip, ANSI, no box, 1-1/4" x 4-7/8"
• 10-072	Mortise: 1-3/16" lip, 1-1/4" x 4-7/8" square corner, box

See price book for other available strikes.

14 Door Thickness

• 134	1-3/4"

Other thicknesses available between 1-3/8" and 2-3/4" See price book for details.

Lever Styles

Conventional cylinders shown, SFIC and FSIC also available.

Athens

Boardwalk

Broadway

Latitude

Longitude

Rhodes

Sparta

Tubular

Finishes

605
Bright Brass

606
Satin Brass

612
Satin Bronze

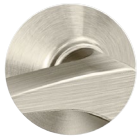
619
Satin Nickel

625
Bright Chrome

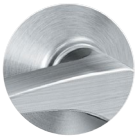
626
Satin Chrome

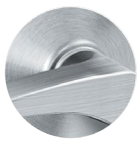
626AM
Satin Chrome Antimicrobial

643e
Aged Bronze

© 2024 Allegion plc
004446, Rev. 10/24

AD-402

FIPS 201-2 Integration Ready Networked Wireless Electronic Lock

Overview

AD Series electronic locks from Schlage® are designed to be modular and provide more options to choose from, more functionality in the lock and greater compatibility with existing systems. Its patented modular design allows the lock to be customized to fit the needs of an application now, and changed to meet future needs without removing it from the door.

AD-402 locks feature a multi-technology card and keypad reader (FMK) that is fully PIV and PIV-I capable for dual authentication to an external server. The open architecture software design of AD Series facilitates integration making AD-402 a desirable part of a Physical Access Control Software (PACS) provider's offering. Any completed PACS integrations that are tested and approved under HSPD-12 guidelines can then be applied in U.S. Federal Agency Buildings.

Factory orderable options include choices of chassis type, network configurations, locking functions, power options, lever styles and finishes. It also offers a selection of features that can be configured in the field to customize your openings.

To simplify installation, the AD Series combines all the hardware components required at the door into one design that includes the electrified lock, credential reader, request-to-exit sensor, request-to-enter sensor, and both door position and tamper switches. The AD-402 has a number of features built in that are configurable in the field and a long list of items that can be monitored by access control software.

The AD-402 wireless networked lock gives you many of the key benefits of a hardwired access control system — without the wires. This allows you to secure doors that were traditionally difficult to run wires to in the past — and increase the security throughout your facility.

Features & Benefits

- PIV and PIV-I compatible
- Open architecture platform
- The PIM400-485 Panel Interface Module ensures seamless communication with your RS-485 system and can support up to 16 AD-402 devices
- Non-invasive installations for historic buildings and sensitive areas
- Secure encrypted data transmission
- Unique communication protocols that won't interfere with other wireless networks
- Patent-pending wireless feature that enables efficient centralized lockdown in less than 10 seconds while still optimizing battery life up to 2 years
- Available in cylindrical, mortise, mortise deadbolt and exit trim
- Compatible with major brands of master key systems

CYBERSECURITY
Learn about Allegion's commitment

Reliable Communications

Secure and reliable wireless communication with the Panel Interface Module (PIM) is accomplished using 900 MHz frequency. 900 MHz band enables longer transmission ranges because signal propagation with longer wavelengths travel a greater distance and better penetrate typical building construction – allowing for simplified system design.

Wake-Up on Radio

This feature enables implementation of wireless locks in applications where centralized lockdown or unlock is required. 'Wake Up on Radio' utilizes patent-pending technology to enable real-time activation at a remote battery-powered wireless lock. The technology is configurable from 10 to 1 second increments. When Wake-Up on Radio is used in critical applications, Dynamic Channel Switching should also be enabled.

Panel Interface Module (PIM400)

The PIM400 (sold separately) is required for communication between the AD-402 wireless lock and the access control panel, and can support up to 16 locks depending on your access control system.

Exterior

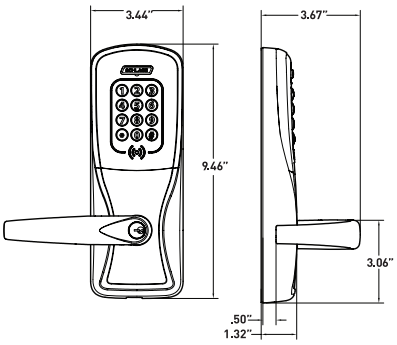

Interior

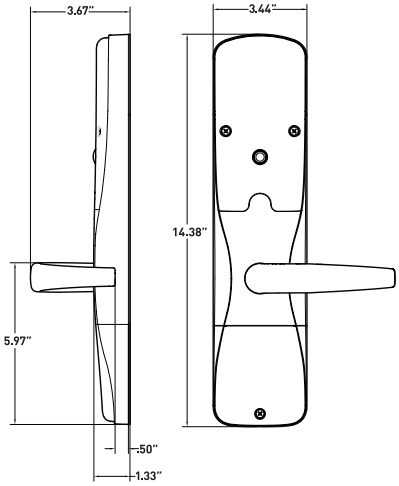

AD-402 Electronic Lock Specifications	
Modulation	900 MHz spread spectrum, direct sequence, 10 channels
Frequency range	902-928 MHz
Transmission/encryption	AES-128 bit key
Credential verification time	< 2 seconds in FASC-N mode: card certificate validated by the ACP only 2-6 seconds in full authentication mode: card certificate validated by 3rd party server
Wake-Up on Radio	Responds to lock/unlock command from host in less than 10 seconds in battery powered applications (per field configuration)
Communication range	Up to 200 ft with obstructions (normal building construction), up to 1,000 ft clear line of sight
RF interference avoidance	Configurable dynamic channel switching
Data rate	RF: 40 kbps
Visual/audible communications	Tri-colored LED's and audible indicators (field configurable)
System interface	RS-485
Power supply	4AA, 8AA, 12 VDC or 24 VDC
Voltage range	4 VDC to 26 VDC
Max current requirement	Up to 250 mA
Battery life[1]	FASC-N mode: 18-24 months (4AA) Full authentication mode: 10-12 months (4AA)
Operating temperature	Exterior: -31° to 151°F (-35° to 66°C) Interior: 32° to 120°F (0° to 49°C) (battery)
Operating humidity	0 - 100% non-condensing
Certifications	ANSI/BHMA A156.25; ANSI/BHMA Grade 1; UL 294; ULC S319; UL 10C 3 hour; FCC Part 15; Industry Canada (IC); ADA compliant Cylindrical and mortise chassis only: TDI DR-464; DR-465; FL12400, FL4613, FL1592, FL13013, FL14482 Mortise chassis only: FL3905
Accessories	Panel Interface Module (PIM400), SUS-A Cable with SUS Android mobile app. Also supported by existing Handheld Devices (HHD)

Functions

- Storeroom[2]
- Office/classroom[2]
- Privacy
- Apartment

Standard Status Signals

- Lock/unlock status
- Request-to-exit
- Door position
- Mechanical key override
- Deadbolt position
- Interior push button
- Interior cover tamper guard
- Battery status
- Communication status
- Request-to-enter

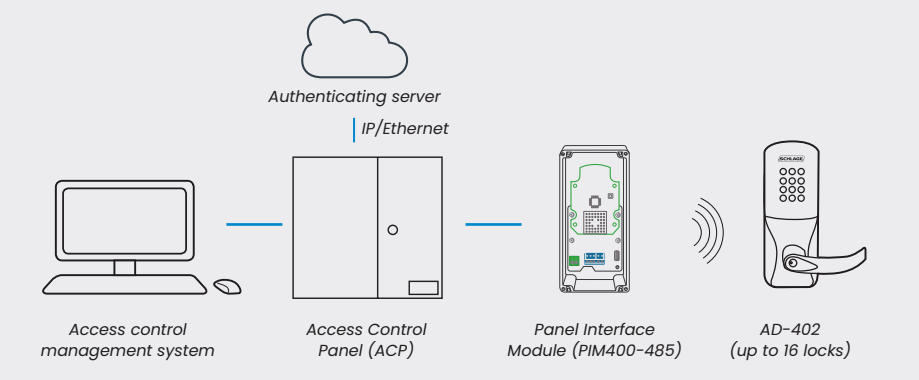

1. Battery life testing results based on an average 20 activations per day.
2. Storeroom and office/classroom functions not available with mortise deadbolt option.

Mechanical Specifications			
	Cylindrical	**Mortise**	**Exit Trim**
Handing	Handed to order, field reversible		
ANSI standard (meets or exceeds)	A156.25 locked outdoor A156.2 Series 4000 Grade 1	A156.25 locked outdoor A156.13 Series 1000 Grade 1	A156.25 locked outdoor A156.3 Grade 1
Door thickness	1-3/4" standard, 1-3/8" to 2-3/4" optional (available in 1/8" increments)		
Backset	Standard: 2-3/4" Optional: 2-3/8", 3-3/4", 5"	2-3/4" only	Defined by exit device
Latch bolt	Standard: 1/2" throw Optional: 3/4" throw	Standard: 3/4" throw Optional: 1" throw on mortise deadbolt	Provided by exit device
Levers	Pressure cast zinc, plated		
Strike	Standard: 1-3/16" lip, ANSI, 1-1/4" x 4-7/8" Optional: Additional configurations available, please see price book		Provided by exit device
Cylinder and keys	Schlage® 6-pin Everest 29 S123 keyway Conventional cylinder with two patented keys standard. Additional options available including SFIC, FSIC and competitor brands. See lever and cylinder compatibility data sheet.		

AD Series exit trim is compatible with Von Duprin 98/99 and 98/99XP (rim, mortise, SVR; and CVC, CVR on metal doors only), Von Duprin 22/22F (rim and SVR) and Falcon 25 (rim) exit devices from Allegion. The AD Series is also compatible with select rim exit devices from Sargent, Corbin Russwin, Yale, Dorma and Precision.

For Von Duprin and Falcon solutions, a low current request-to-exit switch (RX-LC or AE) is required. The part numbers are:

Von Duprin: 050281
Falcon: 650359

Refer to the AD Series Exit Trim Compatibility Guide for additional details.

FMK Multi-Technology Reader Specification	
Credential technologies	Proximity (125 kHz), Smart (13.56 MHz)
Standards	ISO 15693, ISO 14443
Read range	Proximity: up to 1.25"; Smart: up to .75"
Proximity credential support	**Compatibility:** Schlage, HID[2], GE/CASI ProxLite®, AWID® and LenelProx®
Smart credential support	**Secure sector compatibility:** Schlage MIFARE Classic®, Schlage MIFARE Plus®, Schlage MIFARE® DESFire®; PIV and PIV-I[1] **CSN only compatibility:** HID iCLASS®, HID iCLASS SE®, Inside Contactless Pico Tag®, MIFARE Classic/Plus/DESFire, ST Microelectronics®, Texas Instruments Tag-It®, Phillips I-Code®
Certifications	FCC, Industry Canada (IC), UL 294
Options	12 button, 3 x 4 matrix backlit keypad

1. 75 bit output format default. Configurable to other output formats.
2. Proximity bit lengths greater than 37 not supported.

AD Series FMK Reader Modules

The AD Series is an ideal solution for applications which require approval by the U.S. Federal Government under HSPD-12 for FIPS 201-2 compliance. It is possible to upgrade existing, non-compliant AD Series locks to the new standard as follows:

- Field upgrade AD Series locks not currently set up for FIPS 201-2 by replacing the reader module with a FIPS 201-2 PIV-I capable FMK reader (sold separately)
- Field upgrade AD Series FIPS 201-1 compliant locks with an FMK reader manufactured after August 2016 by uploading FIPS 201-2 compatible firmware (AD.A.121 or higher)

Both types of upgrades should only be performed by a PACS provider who has tested and been approved under HSPD-12 for AD Series integration.

PIV capable

- The FMK reader is required on AD Series locks to achieve FIPS 201-2 compliance; It supports proximity cards and is PIV-I capable using 13.56 MHz smart card technologies

KEYPAD

Allegion, the Allegion logo, Falcon, Schlage, the Schlage logo, and Von Duprin are trademarks of Allegion plc, its subsidiaries and/or affiliates in the United States and other countries. All other trademarks are the property of their respective owners.

Ordering Information

Available through one of our GSA schedule 84 approved distributions. BAA options available.

AD	-	402	-	CY	-	70	-	FMK	-	SPA	-	626	-	P6	-	S123	-	RH	-	4B	-	13-247	-	10-025	-	134
Series		Class		Chassis		Function		Reader		Lever Style		Finish		Key Cylinder		Keyway		Handing		Battery		Backset & Latch or Armored Front		Strike		Door Thickness
1		2		3		4		5		6		7		8		9		10		11		12		13		14

Standard options are indicated with a dot. See price book for specific configuration options.

3 Chassis

CY	Cylindrical
MS	Mortise
MD	Mortise deadbolt
993R	Exit trim – Rim/CVC/CVR
993S	Exit trim – SVR
993M	Exit trim – mortise
993DT	Non-functioning dummy trim for exit

4 Function

40	Privacy
50	Office/classroom
60	Apartment
70	Storeroom

Lock function capabilities are determined by users access control system.

5 Reader

• FMK	FIPS 201-1 compliant multi-technology + keypad (125 kHz and 13.56 MHz)

6 Lever

ATH	Athens
BRK	Boardwalk
BRW	Broadway
LAT	Latitude
LON	Longitude
RHO	Rhodes
SPA	Sparta
TLR	Tubular

Available with tactile warning options.

7 Finish

605	Bright Brass
606	Satin Brass
612	Satin Bronze
619	Satin Nickel
625	Bright Chrome
• 626	Satin Chrome
626AM	Satin Chrome Antimicrobial
643e	Aged Bronze

8 Key Cylinder

• P6	Schlage 6-pin conventional key-in-lever cylinder

See price book for other SFIC, FSIC and less cylinder options available. Compatible with Schlage®, Sargent®, Corbin Russwin, Medeco® and Yale®.

9 Keyway

• S123	Everest 29

See price book for other available keyway options including restricted keyways in Primus XP high security cylinders and master keying.

10 Handing

• RH	Right handed
LH	Left handed

Field reversible.

11 Battery

• 4B	4AA
• 8B	8AA

12 Backset & Latch or Armored Front

• 13-247	Cylindrical: 2-3/4" backset deadlatch, square corner, 1-1/8" x 2-1/4"
• 09-663	Mortise: Armor front, 1-1/4" wide, square corner

See price book for mortise deadbolt and other backset and latch options or armor front options.

13 Strike

• 10-025	Cylindrical: 1-3/16" lip, ANSI, no box, 1-1/4" x 4-7/8"
• 10-072	Mortise: 1-3/16" lip, 1-1/4" x 4-7/8" square corner, box

See price book for other available strikes.

14 Door Thickness

• 134	1-3/4"

Other thicknesses available between 1-3/8" and 2-3/4" See price book for details.

Lever Styles

Conventional cylinders shown, SFIC and FSIC also available.

Athens

Boardwalk

Broadway

Latitude

Longitude

Rhodes

Sparta

Tubular

Finishes

605
Bright Brass

606
Satin Brass

612
Satin Bronze

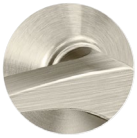
619
Satin Nickel

625
Bright Chrome

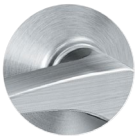
626
Satin Chrome

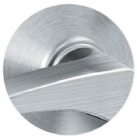
626AM
Satin Chrome Antimicrobial

643e
Aged Bronze

© 2024 Allegion plc
013214, Rev. 01/24

AD-300

Networked Hardwired Electronic Lock

Overview

AD Series electronic locks from Schlage® are designed to be modular and provide more options to choose from, more functionality in the lock and more compatibility with existing access control systems. Its patented modular design allows the lock to be customized to fit the needs of an application now, and changed to meet future needs without removing it from the door.

To simplify installation, the AD Series combines all the hardware components required at the door for a complete access control system into one integrated design that includes the electrified lock, credential reader, request-to-exit and request-to-enter sensors, door position switch, tamper switch and more.

The AD-300 has a number of features built in that are configurable in the field and a long list of items that can be monitored by access control software. Please consult one of our Physical Access Control Software (PACS) providers for details on the integration of specific features.

Encryption Key & Credential Interoperability

- Hardware configured with our default encryption key or custom key developed by Schlage Custom Encryption Key Service (SCEKS) including NXP, HID® and NFC
- Schlage MIFARE® DESFire® and MIFARE Classic® credentials
- NFC mobile credentials in Apple Wallet® and Google Wallet™
- HID iCLASS®, iCLASS SE® and SEOS® plastic and NFC mobile credentials
- Other competitive credentials (see the Credential Compatibility Guide)

Schlage Credential Services

- CardTrax™ credential format sequencing service offering industry standard formats
- Custom format development

1. Check with PACS provider for specific support of mobile credentials in Apple Wallet® and Google Wallet.™

Features & Benefits

- Open architecture platform - integrated into most popular physical access control systems through our PACS Alliance program
- Multi-technology credential compatibility includes Schlage MIFARE®, NFC mobile[1], and proximity
  - Optional support for HID® smart and NFC mobile credentials
- Panel interface options ensure seamless communication with the access control system
- Real-time communication between access control system and lock
- Field configurable fail safe/fail secure and other capabilities per code
- Available in cylindrical, mortise, mortise deadbolt and exit trim
- Compatible with major brands of master key systems
- A wide selection of credential readers and networking options to choose from
- Compatible with NFC mobile credentials on iOS and Android™ platforms[1]

CYBERSECURITY
Learn about Allegion's commitment

Panel Interface Board (PIB300-2D)

If the system requires Wiegand or Clock & Data protocol (rather than a direct RS-485 connection), the AD Series open architecture platform connects up to two AD-300 locks to the Panel Interface Board (PIB300 - sold separately, if required) that seamlessly connects to an access control panel or reader interface board. All monitoring is captured at the remote monitoring station.

Exterior

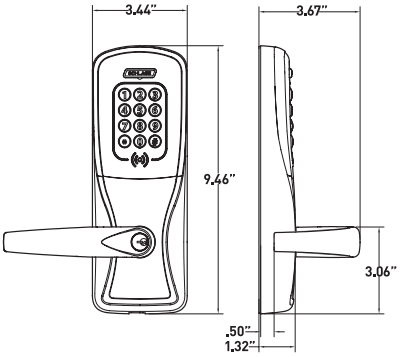

Interior

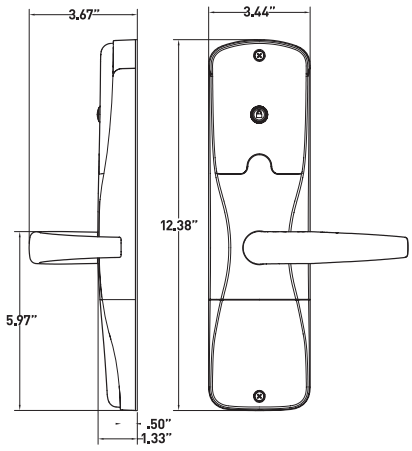

1. Lock requires less than 100 msec, response time does not include latency time of ACP.
2. Storeroom and office/classroom functions not available with mortise deadbolt option.
3. Consult your PACS provider for specific scope of support, including interior pushbutton, mechanical key override and deadbolt position availability.
4. Not available on exit trim.
5. Software indicates lock/unlock status based on sequence of events, but cannot validate mechanical clutch position unless monitored on RS-485 connection.

AD-300 Electronic Lock Specifications	
Credential verification time	< 1 second[1]
Data rate	RS-485 : 9.6 kbps
Visual/audible communications	Tri-colored LED's and audible indicators (field configurable)
System interface	Wiegand or Clock & Data via PIB300 or RS-485 directly
Power supply	12 VDC or 24 VDC
Voltage range	4 VDC to 26 VDC
Max current requirement	Up to 250 mA
Cable specifications for power	18AWG, 2 conductor (Belden 8760 or equivalent)
Cable distance for power	AD-300 to power supply: up to 1,000 ft (303 m)
Cable specifications for data	24AWG, 2 or 4 conductor shielded (Belden 9841, 9842 or equivalent)
Cabling distance for data	AD-300 to PIB300 or ACP, RS-485: up to 4000 ft (1219 m)
Operating temperature	-31° to 151°F (-35° to 66°C)
Operating humidity	0 - 100% non-condensing
Certifications	ANSI/BHMA A156.25; ANSI/BHMA Grade 1; UL 294; ULC S319; UL 10C 3 hour; FCC Part 15; Industry Canada (IC); ADA compliant Cylindrical and mortise chassis only: TDI DR-464; DR-465; FL12400, FL4613, FL1592, FL13013, FL14482 Mortise chassis only: FL3905
Accessories	Panel Interface Board (PIB300), SUS-A Cable used with SUS Android mobile app, Dry Contact Relay Board (RLBD) may be required for supervised inputs (Wiegand systems)

PIB300-2D Specifications	
Communication range	PIB300 to lock, RS-485: up to 4000 ft (1219 m) PIB300 to ACP, Wiegand or Clock & Data: up to 500 ft (152 m)
Visual/audible	13 LEDs for status indicators
System interface	Wiegand or Clock & Data
Power supply	12 VDC or 24 VDC
Voltage range	9.5 VDC to 26 VDC
Max current requirement	Up to 250 mA
Operating temperature	-31° to 151°F (-35° to 66°C)
Dimensions (H x W x D)	7.1" x 7.1" x 3.0" (18.0 cm x 18.0 cm x 7.6 cm)
Weight	1.25 lb (.57 kg)
Cable specifications (PIB300 to ACP)	22AWG, 8 conductor shielded (Alpha 1298C or equivalent)
Certifications	NEMA 1, 4, 4X, 6; UL 294; FCC Part 15; RoHS

Functions

- Storeroom[2]
- Office/classroom[2, 3, 4]
- Privacy[3, 4]
- Apartment[3, 4]

Standard Status Signals

- Lock/unlock status[5]
- Request-to-exit
- Door position
- Mechanical key override[3]
- Deadbolt position[3]
- Interior cover tamper guard[3]
- Communication status[3]
- Interior push button[3]
- Request-to-enter[3]

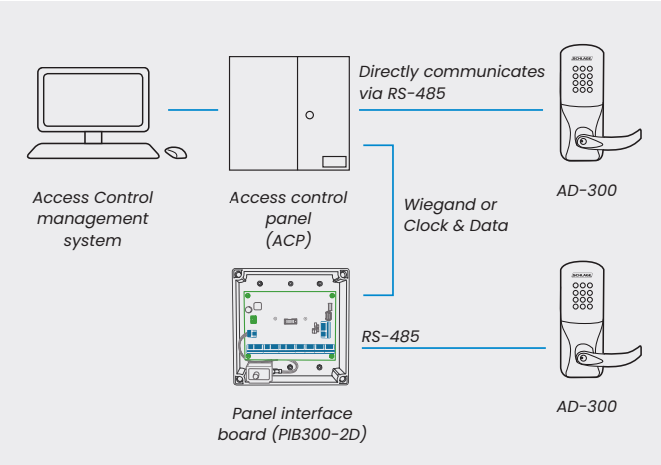

Mechanical Specifications			
	Cylindrical	**Mortise**	**Exit Trim**
Handing	Handed to order, field reversible		
ANSI standard (meets or exceeds)	A156.25 locked outdoor A156.2 Series 4000 Grade 1	A156.25 locked outdoor A156.13 Series 1000 Grade 1	A156.25 locked outdoor A156.3 Grade 1
Door thickness	1-3/4" standard, 1-3/8" to 2-3/4" optional (available in 1/8" increments)		
Backset	Standard: 2-3/4" Optional: 2-3/8", 3-3/4", 5"	2-3/4" only	Defined by exit device
Latch bolt	Standard: 1/2" throw Optional: 3/4" throw	Standard: 3/4" throw Optional: 1" throw on mortise deadbolt	Provided by exit device
Levers	Pressure cast zinc, plated		
Strike	Standard: 1-3/16" lip, ANSI, 1-1/4" x 4-7/8" Optional: Additional configurations available, please see price book		Provided by exit device
Cylinder and keys	Schlage® 6-pin Everest 29 S123 keyway Conventional cylinder with two patented keys standard. Additional options available including SFIC, FSIC and competitor brands. See lever and cylinder compatibility data sheet.		

Standard Multi-Technology Reader Specification	
Credential technologies	Proximity (125 kHz), Smart (13.56 MHz) and Near Field Communication (NFC)
Standards	ISO 15693, ISO 14443
Read range	Proximity: up to 1.25"; Smart: up to .75"; NFC mobile: mobile device dependent
Proximity credential support	Compatibility: Schlage, ISONAS™, HID[4], GE/CASI ProxLite®, AWID® and LenelProx®
Smart credential support	Secure sector: Schlage MIFARE Classic®, Schlage MIFARE Plus®, Schlage MIFARE® DESFire®, PIV and PIV-I[1, 2] CSN only: HID iCLASS®, HID iCLASS SE®, Inside Contactless Pico Tag®, MIFARE Classic/Plus/DESFire, ST Microelectronics®, Texas Instruments Tag-It®, Phillips I-Code®
Mobile credential support	NFC mobile credentials in Apple Wallet® and Google Wallet™ [3]
Certifications	FCC, Industry Canada (IC), UL 294
Options	12 button, 3 x 4 matrix backlit keypad

AD Series exit trim is compatible with Von Duprin 98/99 and 98/99XP (rim, mortise, SVR; and CVC, CVR on metal doors only), Von Duprin 22/22F (rim and SVR) and Falcon 25 (rim) exit devices from Allegion. The AD Series is also compatible with select rim exit devices from Sargent, Corbin Russwin, Yale, Dorma and Precision.

For Von Duprin and Falcon solutions, a low current request-to-exit switch (RX-LC or AE) is required. The part numbers are:

Von Duprin: 050281
Falcon: 650359

Refer to the AD Series Exit Trim Compatibility Guide for additional details.

Benefits of AD Series Multi-Technology Readers:

- Reads multiple brands of both proximity (125 kHz) and smart (13.56 MHz) technologies with single reader
- Compatible with NFC mobile credentials in Apple Wallet® and Google Wallet™ [3]
- Allows facility to migrate to more secure credential technologies over time and as budgets permit

Additional Readers

Si option with HID® support

Supports:

- Secure application area of HID iCLASS®, iCLASS SE®, Seos® smart credentials
- iCLASS Standard Key and Elite Keys
- HID NFC mobile credentials
- All Schlage MIFARE® and NFC mobile credentials

Does not support:

- Proximity
- Bluetooth® (BLE) mobile credentials

Magnetic stripe

- Available with choice of insertion or swipe style readers
- Triple track reader (1, 2 or 3), field configurable
- ABA, ISO76XX standard

Keypad

- Backlit keypad
- 12 button, 3 x 4 matrix

Available AD Series Reader Modules

Multi-Technology

- Proximity
- Smart
- NFC mobile

+ KEYPAD option

Si with HID Support

- Smart
- NFC mobile

+ KEYPAD option

Magnetic Stripe (insertion)

+ KEYPAD option

Magnetic Stripe (swipe)

+ KEYPAD option

Keypad

1. FIPS 201-2 integration ready option available: The AD Series can be used in applications which require approval by the U.S. Federal Government under HSPD-12 for FIPS 201-2 compliance when installed as part of a tested and approved integrated solution. Please see the AD-402 data sheet or AD-302 data sheet for complete details.
2. 75 bit output format default. Configurable to other output formats.
3. Check with PACS provider for specific support of mobile credentials in Apple Wallet® and Google Wallet.™
4. Proximity bit lengths greater than 37 not supported.

Allegion, the Allegion logo, Falcon, Schlage, the Schlage logo, and Von Duprin are trademarks of Allegion plc, its subsidiaries and/or affiliates in the United States and other countries. All other trademarks are the property of their respective owners.

Ordering Information

Available through one of our GSA schedule 84 approved distributions. BAA options available

AD	-	300	-	CY	-	70	-	MG	-	SPA	-	626	-	P6	-	S123	-	RH	-	13-247	-	10-025	-	134
Series		Class		Chassis		Function		Reader		Lever Style		Finish		Key Cylinder		Keyway		Handing		Backset & Latch or Armored Front		Strike		Door Thickness
1		2		3		4		5		6		7		8		9		10		11		12		13

Standard options are indicated with a dot. See price book for specific configuration options.

3 Chassis

CY	Cylindrical
MS	Mortise
MD	Mortise deadbolt
993R	Exit trim – Rim/CVC/CVR
993S	Exit trim – SVR
993M	Exit trim – mortise
993DT	Non-functioning dummy trim for exit

4 Function

40	Privacy
50	Office/classroom
60	Apartment
70	Storeroom

Lock function capabilities are determined by users access control system.

5 Reader

• KP	Keypad
MG	Magnetic stripe (insertion)
MGK	Magnetic stripe + keypad (insertion)
MS	Magnetic stripe (swipe)
MSK	Magnetic stripe + keypad (swipe)
MT	Multi-technology (125 kHz, 13.56 MHz, NFC)
MTK	Multi-technology + keypad (125 kHz, 13.56 MHz, NFC)
FMK	FIPS 201-1 compliant multi-technology + keypad (125 kHz and 13.56 MHz)
Si	HID support
SiK	HID support + keypad
DT	Dummy trim

6 Lever

ATH	Athens
BRK	Boardwalk
BRW	Broadway
LAT	Latitude
LON	Longitude
RHO	Rhodes
SPA	Sparta
TLR	Tubular

Available with tactile warning options.

7 Finish

605	Bright Brass
606	Satin Brass
612	Satin Bronze
619	Satin Nickel
625	Bright Chrome
• 626	Satin Chrome
626AM	Satin Chrome Antimicrobial
643e	Aged Bronze

8 Key Cylinder

• P6	Schlage 6-pin conventional key-in-lever cylinder

See price book for other SFIC, FSIC and less cylinder options available. Compatible with Schlage®, Sargent®, Corbin Russwin, Medeco® and Yale®.

9 Keyway

• S123	Everest 29

See price book for other available keyway options including restricted keyways in Primus XP high security cylinders and master keying.

10 Handing

• RH	Right handed
LH	Left handed

Field reversible.

11 Backset & Latch or Armored Front

• 13-247	Cylindrical: 2-3/4" backset deadlatch, square corner, 1-1/8" x 2-1/4"
• 09-663	Mortise: Armor front, 1-1/4" wide, square corner

See price book for mortise deadbolt and other backset and latch options or armor front options.

12 Strike

• 10-025	Cylindrical: 1-3/16" lip, ANSI, no box, 1-1/4" x 4-7/8"
• 10-072	Mortise: 1-3/16" lip, 1-1/4" x 4-7/8" square corner, box

See price book for other available strikes.

13 Door Thickness

• 134	1-3/4"

Other thicknesses available between 1-3/8" and 2-3/4" See price book for details.

Lever Styles

Conventional cylinders shown, SFIC and FSIC also available.

Athens

Boardwalk

Broadway

Latitude

Longitude

Rhodes

Sparta

Tubular

Finishes

605
Bright Brass

606
Satin Brass

612
Satin Bronze

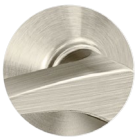
619
Satin Nickel

625
Bright Chrome

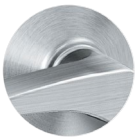
626
Satin Chrome

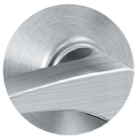
626AM
Satin Chrome Antimicrobial

643e
Aged Bronze

© 2024 Allegion plc
004448, Rev. 10/24

AD-302

FIPS 201-2 APL Listed Networked Hardwired Electronic Lock

Overview

AD Series electronic locks from Schlage® are designed to be modular and provide more options to choose from, more functionality in the lock and greater compatibility with existing systems. Its patented modular design allows the lock to be customized to fit the needs of an application now, and changed to meet future needs without removing it from the door.

AD-302 locks feature a multi-technology card and keypad reader (FMK) that is fully PIV and PIV-I capable for dual authentication to an external server. The open architecture software design of AD Series facilitates integration making AD-302 a desirable part of a Physical Access Control Software (PACS) provider's offering. Any completed PACS integrations that are tested and approved under HSPD-12 guidelines can then be applied in U.S. Federal Agency Buildings.

Factory orderable options include choices of chassis type, network configurations, locking functions, lever styles and finishes. It also offers a wide selection of features that can be configured in the field to customize your openings.

To simplify installation, the AD Series combines all the hardware components required at the door into one design that includes the electrified lock, credential reader, request-to-exit sensor, request-to-enter sensor, and both door position and tamper switches. The AD-302 has a number of features built in that are configurable in the field and a long list of items that can be monitored by access control software.

Features & Benefits

- PIV and PIV-I compatible
- Open architecture platform
- AD-302 locks can wire directly into the panel of integrated RS-485 access control software partners
- Real-time communication between access control system and lock
- Field configurable fail safe/fail secure and other capabilities per code
- Available in cylindrical, mortise, mortise deadbolt and exit trim
- Compatible with major brands of master key systems

CYBERSECURITY
Learn about Allegion's commitment

AD-302

FIPS 201-2 APL Listed Networked Hardwired Electronic Lock

Exterior

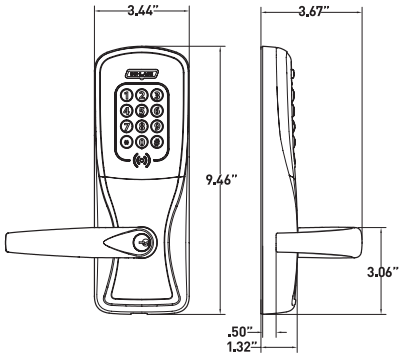

Interior

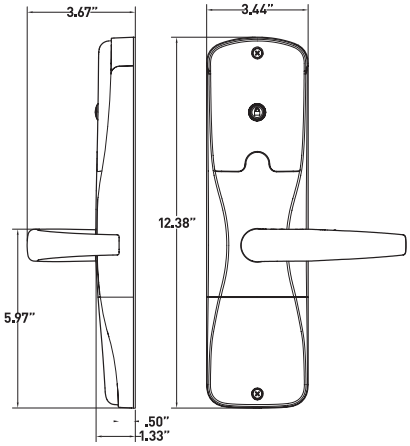

AD-302 Electronic Lock Specifications	
Credential verification time	<2 seconds in FASC-N mode: card certificate validated by the ACP only 2-4 seconds in full authentication mode: card certificate validated by 3rd party server
Data rate	RS-485 : 9.6 kbps
Visual/audible communications	Tri-colored LED's and audible indicators (field configurable)
System interface	RS-485 directly
Power supply	12 VDC or 24 VDC
Voltage range	4 VDC to 26 VDC
Max current requirement	Up to 250 mA
Cable specifications for power	18AWG, 2 conductor (Belden 8760 or equivalent)
Cable distance for power	AD-302 to power supply: up to 1,000 ft (303 m)
Cable specifications for data	24AWG, 2 or 4 conductor shielded (Belden 9841, 9842 or equivalent)
Cabling distance for data	AD-302 to ACP, RS-485: up to 4000 ft (1219 m)
Operating temperature	-31° to 151°F (-35° to 66°C)
Operating humidity	0 - 100% non-condensing
Certifications	ANSI/BHMA A156.25; ANSI/BHMA Grade 1; UL 294; ULC S319; UL 10C 3 hour; FCC Part 15; Industry Canada (IC); ADA compliant Cylindrical and mortise chassis only: TDI DR-464; DR-465; FL12400, FL4613, FL1592, FL13013, FL14482 Mortise chassis only: FL3905
Accessories	SUS-A Cable with SUS Android™ mobile app. Also supported by existing Handheld Devices (HHD)

Functions

- Storeroom[2]
- Office/classroom[2]
- Privacy[3]
- Apartment

Standard Status Signals

- Lock/unlock status
- Mechanical key override
- Battery status

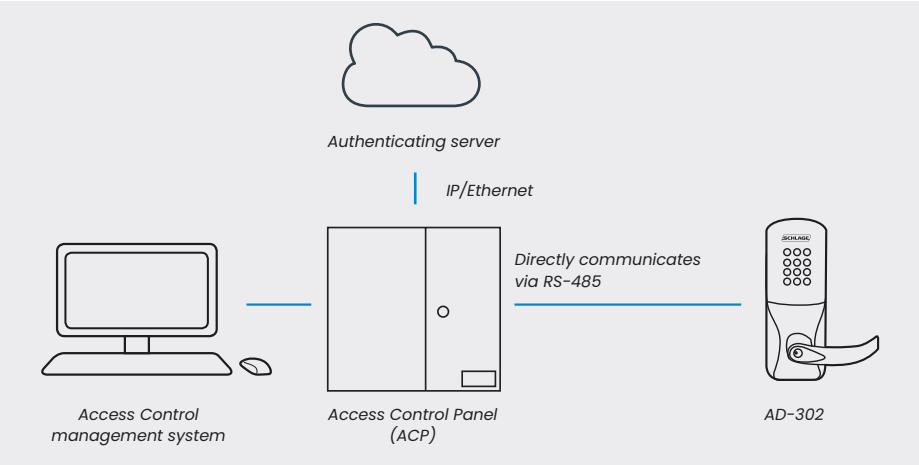

1. Storeroom and office/classroom functions not available with mortise deadbolt option.

Mechanical Specifications			
	Cylindrical	**Mortise**	**Exit Trim**
Handing	Handed to order, field reversible		
ANSI standard (meets or exceeds)	A156.25 locked outdoor A156.2 Series 4000 Grade 1	A156.25 locked outdoor A156.13 Series 1000 Grade 1	A156.25 locked outdoor A156.3 Grade 1
Door thickness	1-3/4" standard, 1-3/8" to 2-3/4" optional (available in 1/8" increments)		
Backset	Standard: 2-3/4" Optional: 2-3/8", 3-3/4", 5"	2-3/4" only	Defined by exit device
Latch bolt	Standard: 1/2" throw Optional: 3/4" throw	Standard: 3/4" throw Optional: 1" throw on mortise deadbolt	Provided by exit device
Levers	Pressure cast zinc, plated		
Strike	Standard: 1-3/16" lip, ANSI, 1-1/4" x 4-7/8" Optional: Additional configurations available, please see price book		Provided by exit device
Cylinder and keys	Schlage® 6-pin Everest 29 S123 keyway Conventional cylinder with two patented keys standard. Additional options available including SFIC, FSIC and competitor brands. See lever and cylinder compatibility data sheet.		

AD Series exit trim is compatible with Von Duprin 98/99 and 98/99XP (rim, mortise, SVR; and CVC, CVR on metal doors only), Von Duprin 22/22F (rim and SVR) and Falcon 25 (rim) exit devices from Allegion. The AD Series is also compatible with select rim exit devices from Sargent, Corbin Russwin, Yale, Dorma and Precision.

For Von Duprin and Falcon solutions, a low current request-to-exit switch (RX-LC or AE) is required. The part numbers are:

Von Duprin: 050281
Falcon: 650359

Refer to the AD Series Exit Trim Compatibility Guide for additional details.

FMK Multi-Technology Reader Specification	
Credential technologies	Proximity (125 kHz), Smart (13.56 MHz)
Standards	ISO 15693, ISO 14443
Read range	Proximity: up to 1.25"; Smart: up to .75"
Proximity credential support	Compatibility: Schlage, HID[2], GE/CASI ProxLite®, AWID® and LenelProx®
Smart credential support	Secure sector compatibility: Schlage MIFARE Classic®, Schlage MIFARE Plus®, Schlage MIFARE® DESFire®; PIV and PIV-I[1] CSN only compatibility: HID iCLASS®, HID iCLASS SE®, Inside Contactless Pico Tag®, MIFARE Classic/Plus/DESFire, ST Microelectronics®, Texas Instruments Tag-It®, Phillips I-Code®
Certifications	FCC, Industry Canada (IC), UL 294
Options	12 button, 3 x 4 matrix backlit keypad

1. 75 bit output format default. Configurable to other output formats.
2. Proximity bit lengths greater than 37 not supported.

AD Series FMK Reader Modules

The AD Series is an ideal solution for applications which require approval by the U.S. Federal Government under HSPD-12 for FIPS 201-2 compliance. It is possible to upgrade existing, non-compliant AD Series locks to the new standard as follows:

- Field upgrade AD Series locks not currently set up for FIPS 201-2 by replacing the reader module with a FIPS 201-2 PIV-I capable FMK reader (sold separately)
- Field upgrade AD Series FIPS 201-1 compliant locks with an FMK reader manufactured after August 2016 by uploading FIPS 201-2 compatible firmware (AD.A.121 or higher)

Both types of upgrades should only be performed by a PACS provider who has tested and been approved under HSPD-12 for AD Series integration.

PIV capable

- The FMK reader is required on AD Series locks to achieve FIPS 201-2 compliance; It supports proximity cards and is PIV-I capable using 13.56 MHz smart card technologies

KEYPAD

Allegion, the Allegion logo, Falcon, Schlage, the Schlage logo, and Von Duprin are trademarks of Allegion plc, its subsidiaries and/or affiliates in the United States and other countries. All other trademarks are the property of their respective owners.

Ordering Information

Available through one of our GSA schedule 84 approved distributions. BAA options available

AD	-	302	-	CY	-	70	-	FMK	-	SPA	-	626	-	P6	-	S123	-	RH	-	13-247	-	10-025	-	134
Series		Class		Chassis		Function		Reader		Lever Style		Finish		Key Cylinder		Keyway		Handing		Backset & Latch or Armored Front		Strike		Door Thickness
1		2		3		4		5		6		7		8		9		10		11		12		13

Standard options are indicated with a dot. See price book for specific configuration options.

3 Chassis

CY	Cylindrical
MS	Mortise
MD	Mortise deadbolt
993R	Exit trim – Rim/CVC/CVR
993S	Exit trim – SVR
993M	Exit trim – mortise
993DT	Non-functioning dummy trim for exit

4 Function

40	Privacy
50	Office/classroom
60	Apartment
70	Storeroom

Lock function capabilities are determined by users access control system.

5 Reader

• FMK	FIPS 201-1 compliant multi-technology + keypad (125 kHz and 13.56 MHz)

6 Lever

ATH	Athens
BRK	Boardwalk
BRW	Broadway
LAT	Latitude
LON	Longitude
RHO	Rhodes
SPA	Sparta
TLR	Tubular

Available with tactile warning options.

7 Finish

605	Bright Brass
606	Satin Brass
612	Satin Bronze
619	Satin Nickel
625	Bright Chrome
• 626	Satin Chrome
626AM	Satin Chrome Antimicrobial
643e	Aged Bronze

8 Key Cylinder

• P6	Schlage 6-pin conventional key-in-lever cylinder

See price book for other SFIC, FSIC and less cylinder options available. Compatible with Schlage®, Sargent®, Corbin Russwin, Medeco® and Yale®.

9 Keyway

• S123	Everest 29

See price book for other available keyway options including restricted keyways in Primus XP high security cylinders and master keying.

10 Handing

• RH	Right handed
LH	Left handed

Field reversible.

11 Backset & Latch or Armored Front

• 13-247	Cylindrical: 2-3/4" backset deadlatch, square corner, 1-1/8" x 2-1/4"
• 09-663	Mortise: Armor front, 1-1/4" wide, square corner

See price book for mortise deadbolt and other backset and latch options or armor front options.

12 Strike

• 10-025	Cylindrical: 1-3/16" lip, ANSI, no box, 1-1/4" x 4-7/8"
• 10-072	Mortise: 1-3/16" lip, 1-1/4" x 4-7/8" square corner, box

See price book for other available strikes.

13 Door Thickness

• 134	1-3/4"

Other thicknesses available between 1-3/8" and 2-3/4" See price book for details.

Lever Styles

Conventional cylinders shown, SFIC and FSIC also available.

Athens

Boardwalk

Broadway

Latitude

Longitude

Rhodes

Sparta

Tubular

Finishes

605
Bright Brass

606
Satin Brass

612
Satin Bronze

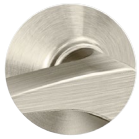
619
Satin Nickel

625
Bright Chrome

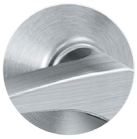
626
Satin Chrome

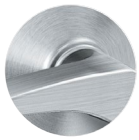
626AM
Satin Chrome Antimicrobial

643e
Aged Bronze

© 2024 Allegion plc
004869, Rev. 01/24

AD-200

Standalone Electronic Lock

Overview

AD Series electronic locks from Schlage are designed to be modular and provide more options to choose from, more functionality in the lock and more compatibility with existing systems. Its patented modular design allows the lock to be customized to fit the needs of an application now, and can change to meet future needs without removing it from the door.

Factory orderable options include choices of credential readers, chassis type, locking functions, power options, lever styles and finishes. It also offers a wide selection of features that can be configured in the field to customize your openings.

The AD-200 is a simple, economical solution if no access control system currently exists in the facility, or for openings that don't require the control of a networked solution. The AD-200 is easily upgradable to a networked lock if requirements change in the future.

On all AD Series standalone locks, Schlage has built in many of the incremental features needed in a networked system such as request-to-exit and -enter sensors, interior cover tamper guard, as well as the door position switch. This way, if the customer chooses to network this opening in the future, all the components will be there to make the transition an easy one.

Encryption Key & Credential Interoperability

- Hardware configured with our default encryption key or custom key developed by Schlage Custom Encryption Key Service (SCEKS) including NXP, HID® and NFC
- Schlage MIFARE® DESFire® and MIFARE Classic® credentials
- NFC mobile credentials in Apple Wallet® and Google Wallet™
- HID iCLASS®, iCLASS SE® and SEOS® plastic and NFC mobile credentials
- Other competitive credentials (see the Credential Compatibility Guide)

Schlage Credential Services

- CardTrax™ credential format sequencing service offering industry standard formats
- Custom format development

Features & Benefits

- Security that's more intelligent and convenient than traditional mechanical locking devices
- Audit trail reports that allow you to track usage and events
- Update users and access rights at the lock using the keypad or handheld device
- The ability to upgrade to a networked solution without removing the lock from the door
- Available in cylindrical, mortise, mortise deadbolt and exit trim
- Compatible with major brands of master key systems and exit devices
- Hardwired remote push button release capability
- Programmable option for lighted occupancy indication[1]

1. Available on privacy function locks manufactured after May 2019 with firmware version AD.A.126 or higher.

Exterior

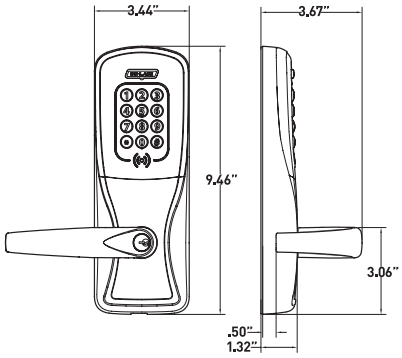

Interior

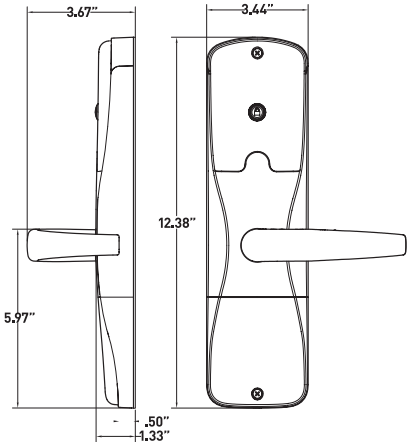

AD-200 Electronic Lock Specifications	
Users	Up to 5,000
Audits	Up to 5,000
Credential verification time	≤ 1 second[1]
Visual/audible communications	Tri-colored LEDs and audible indicators (field configurable)
System interface	SUS mobile app on compatible Android™ device[3]
Power supply	4AA, 8AA, 12 VDC or 24 VDC
Voltage range	4 VDC to 26 VDC
Max current requirement	Up to 250 mA
Battery life	Up to 2 yrs with 4AA
Operating temperature	Exterior: -31° to 151°F (-35° to 66°C) Interior: 32° to 120°F (0° to 49°C) (battery)
Operating humidity	0 - 100% non-condensing
Certifications	ANSI/BHMA A156.25; ANSI/BHMA Grade 1; UL 294; ULC S319; UL 10C 3 hour; FCC Part 15; Industry Canada (IC); ADA compliant; Cylindrical and mortise chassis only: TDI DR-464, DR-465; FL12400, FL4613, FL1592, FL13013, FL14482; Mortise chassis only: FL3905
Accessories	SUS-A Cable used with SUS Android mobile app[3]

Functions

- Storeroom[2]
- Office/classroom[2]
- Privacy
- Apartment

Standard Status Signals

- Mechanical key override
- Battery status - indicated by flashing LED lights
- Lock/unlock status
- Occupied - indicated by red LED light (privacy function only)

Schlage Utility Software

The Schlage Utility Software (SUS) mobile app on compatible Android mobile devices and SUS-A cable provides an easy way to manage people, audits and locks for simple access control management.

Schlage Utility Software

- Initialize lock and accessories
- Field configure devices
  - Credential reader formats
  - Lock function
  - Unlock period
  - Failure mode
  - Audible alarm on/off
- Service and diagnostics
  - Battery status
  - Validate hardware and software revision
  - Troubleshooting status signals
  - Firmware upgrades
- New device template simplifies configuration

1. Verification time is dependent on size of user base
2. Storeroom and Office/Classroom function not available with mortise deadbolt option
3. Also compatible with legacy Handheld Device (HHD)

Mechanical Specifications			
	Cylindrical	**Mortise**	**Exit Trim**
Handing	Handed to order, field reversible		
ANSI standard (meets or exceeds)	A156.25 locked outdoor A156.2 Series 4000 Grade 1	A156.25 locked outdoor A156.13 Series 1000 Grade 1	A156.25 locked outdoor A156.3 Grade 1
Door thickness	1-3/4" standard, 1-3/8" to 2-3/4" optional (available in 1/8" increments)		
Backset	Standard: 2-3/4" Optional: 2-3/8", 3-3/4", 5"	2-3/4" only	Defined by exit device
Latch bolt	Standard: 1/2" throw Optional: 3/4" throw	Standard: 3/4" throw Optional: 1" throw on mortise deadbolt	Provided by exit device
Levers	Pressure cast zinc, plated		
Strike	Standard: 1-3/16" lip, ANSI, 1-1/4" x 4-7/8" Optional: Additional configurations available, please see price book		Provided by exit device
Cylinder and keys	Schlage® 6-pin Everest 29 S123 keyway Conventional cylinder with two patented keys standard. Additional options available including SFIC, FSIC and competitor brands. See Lever & Cylinder Compatibility Data Sheet.		

Standard Multi-Technology Reader Specification	
Credential technologies	Proximity (125 kHz) and Smart (13.56 MHz)
Standards	ISO 15693, ISO 14443
Read range	Proximity: up to 1.25"; Smart: up to .75"
Proximity credential support	Compatibility: Schlage®, ISONAS,™ HID[1], GE/CASI ProxLite®, AWID® and LenelProx®
Smart credential support[2]	Secure sector compatibility: Schlage MIFARE Classic®, Schlage MIFARE Plus®, Schlage MIFARE® DESFire®, PIV and PIV-I[3] CSN only compatibility: HID iCLASS®, HID iCLASS SE®, Inside Contactless Pico Tag®, MIFARE Classic/Plus/DESFire, ST Microelectronics®, Texas Instruments Tag-It®, Phillips I-Code®
Certifications	FCC, UL 294
Options	Option for 12 button, 3 x 4 matrix backlit keypad

AD Series exit trim is compatible with Von Duprin 98/99 and 98/99XP (rim, mortise, SVR; and CVC, CVR on metal doors only), Von Duprin 22/22F (rim and SVR) and Falcon 25 (rim) exit devices from Allegion. The AD Series is also compatible with select rim exit devices from Sargent, Corbin Russwin, Yale, Dorma and Precision.

For Von Duprin and Falcon solutions, a low current request-to-exit switch (RX-LC or AE) is recommended for future network migration.

Refer to the AD Series Exit Trim Compatibility Guide for additional details.

Available AD Series Reader Modules

Multi-Technology

- Proximity
- Smart

+ KEYPAD option

Si with HID Support

- Smart

+ KEYPAD option

Magnetic Stripe (insertion)

+ KEYPAD option

Magnetic Stripe (swipe)

+ KEYPAD option

Keypad

Benefits of AD Series Multi-Technology Readers:

- Reads multiple brands of both proximity (125 kHz) and smart (13.56 MHz) technologies with single reader
- Allows facility to migrate to more secure credential technologies over time and as budgets permit

Additional Readers

Si option with HID® support

Supports:

- Secure application area of HID iCLASS®, iCLASS SE®, Seos® smart credentials
- iCLASS Standard Key and Elite Keys
- All Schlage MIFARE® and NFC mobile credentials

Does not support:

- Proximity
- Bluetooth® (BLE) mobile credentials

Magnetic stripe

- Available with choice of insertion or swipe style readers
- Triple track reader (1, 2 or 3), field configurable
- ABA, ISO76XX standard

Keypad

- Backlit keypad
- 12 button, 3 x 4 matrix

1. Proximity bit lengths greater than 37 not supported
2. Smart card functionality dependant on access control software
3. 75 bit output format default. Configurable to other output formats. Check with access control provider for specific support

Allegion, the Allegion logo, Falcon, Schlage, the Schlage logo, and Von Duprin are trademarks of Allegion plc, its subsidiaries and/or affiliates in the United States and other countries. All other trademarks are the property of their respective owners.

Ordering Information

Available through one of our GSA schedule 84 approved distributions. BAA options available

AD	-	200	-	CY	-	70	-	MG	-	SPA	-	626	-	P6	-	S123	-	RH	-	4B	-	13-247	-	10-025	-	134
Series		Class		Chassis		Function		Reader		Lever Style		Finish		Key Cylinder		Keyway		Handing		Battery		Backset & Latch or Armored Front		Strike		Door Thickness
1		2		3		4		5		6		7		8		9		10		11		12		13		14

Standard options are indicated with a dot. See price book for specific configuration options.

3 Chassis

CY	Cylindrical
MS	Mortise
MD	Mortise deadbolt
993R	Exit trim – Rim/CVC/CVR
993S	Exit trim – SVR
993M	Exit trim – mortise
993DT	Non-functioning dummy trim for exit

4 Function

40	Privacy
50	Office/classroom
60	Apartment
70	Storeroom

Lock function capabilities are determined by users access control system.

5 Reader

• KP	Keypad
MG	Magnetic stripe (insertion)
MGK	Magnetic stripe + keypad (insertion)
MS	Magnetic stripe (swipe)
MSK	Magnetic stripe + keypad (swipe)
MT	Multi-technology (125 kHz, 13.56 MHz, NFC)
MTK	Multi-technology + keypad (125 kHz, 13.56 MHz, NFC)
Si	HID support
SiK	HID support + keypad
DT	Dummy trim

6 Lever

ATH	Athens
BRK	Boardwalk
BRW	Broadway
LAT	Latitude
LON	Longitude
RHO	Rhodes
SPA	Sparta
TLR	Tubular

Available with knurled surface.

7 Finish

605	Bright Brass
606	Satin Brass
612	Satin Bronze
619	Satin Nickel
625	Bright Chrome
• 626	Satin Chrome
626AM	Satin Chrome Antimicrobial
643e	Aged Bronze

8 Key Cylinder

• P6	Schlage 6-pin conventional key-in-lever cylinder

See price book for other SFIC, FSIC and less cylinder options available. Compatible with Schlage®, Sargent®, Corbin Russwin, Medeco® and Yale®.

9 Keyway

• S123	Everest 29

See price book for other available keyway options including restricted keyways in Primus XP high security cylinders and master keying.

10 Handing

• RH	Right handed
LH	Left handed

Field reversible.

11 Battery

• 4B	4AA
8B	8AA

12 Backset & Latch or Armored Front

• 13-247	Cylindrical: 2-3/4" backset deadlatch, square corner, 1-1/8" x 2-1/4"
• 09-663	Mortise: Armor front, 1-1/4" wide, square corner

See price book for mortise deadbolt and other backset and latch options or armor front options.

13 Strike

• 10-025	Cylindrical: 1-3/16" lip, ANSI, no box, 1-1/4" x 4-7/8"
• 10-072	Mortise: 1-3/16" lip, 1-1/4" x 4-7/8" square corner, box

See price book for other available strikes.

14 Door Thickness

• 134	1-3/4"

Other thicknesses available between 1-3/8" and 2-3/4" See price book for details.

Lever Styles

Conventional cylinders shown, SFIC and FSIC also available.

Athens

Boardwalk

Broadway

Latitude

Longitude

Rhodes

Sparta

Tubular

Finishes

605
Bright Brass

606
Satin Brass

612
Satin Bronze

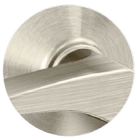
619
Satin Nickel

625
Bright Chrome

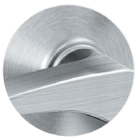
626
Satin Chrome

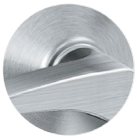
626AM
Satin Chrome Antimicrobial

643e
Aged Bronze

© 2024 Allegion plc
004442, Rev. 10/24

AD-201

PIV & PIV-I Compliant Standalone Electronic Lock

Overview

The AD-201 is a simple and economical standalone solution for applications which require compatibility with PIV or PIV-I credentials. The solution consists of the AD-201 integrated electronic lock with multi-technology + keypad (FMK) reader module, a programming device and cable, and the MT20 enrollment reader.

The innovative modular design of the AD-201 allows reader modules and communication modules to easily be upgraded. As a result, the AD-201 standalone lock can become an AD-402 networked wireless locks in minutes, without even taking it off the door.

The FMK reader module comes standard with the AD-201 lock and also can be ordered separately for field upgrades. It is for use with PIV and PIV-I credentials. The FMK is a multi-technology reader that supports 125 kHz proximity and 13.56 MHz smart cards.

Schlage Express offline access control software is used in conjunction with the AD-201 to manage access points, users and schedules. Reporting capability is available to show audit trails retrieved, access privileges granted, and time functions established by either user or door.

The MT-20 is an enrollment reader is designed to simplify the credential enrollment process. You can easily enroll 75-bit and 200-bit PIV, PIV-I or other smart card into Schlage Express using the MT-20 connected to your computer's USB port.

The Schlage Utility Software (SUS) on either an Android mobile device or legacy Schlage Handheld Device (HHD) serves as the link between Schlage Express software and the AD-201 lock. It consolidates and simplifies programming and managing your access control system. It is used to initialize, configure and test product operation as well as to transfer information between the lock and the software.

Features & Benefits

AD-201 Standalone Lock

- Multi-technology reader for use with PIV and PIV-I credentials
- Upgradable to an AD-402 FIPS 201-2 integration ready wireless lock
- Available in cylindrical, mortise, mortise deadbolt and exit trim
- UL 294 listed, ANSI/BHMA A156.25 and ANSI/BHMA Grade 1 certified

Schlage Express™ Offline Software

- Offline software used to manage AD-201 locks
- Supports up to 2,000 users/audits with 50 locks or 1,000 users/audits with 100 locks
- Supports up to 8 time zone and up to 16 holidays and auto unlocks per system

MT-20 Enrollment Reader

- USB reader makes it easy to enroll credentials in Schlage Express™
- Recognizes Schlage MIFARE® smart credentials

Schlage Utility Software (SUS)

- Allows you to initialize, configure and test AD-201 locks
- Used to transfer user rights from Schlage Express to AD-201
- Transfers audits trails from AD-201 to Schlage Express

AD-201

PIV & PIV-I Compliant Standalone Electronic Lock

Exterior

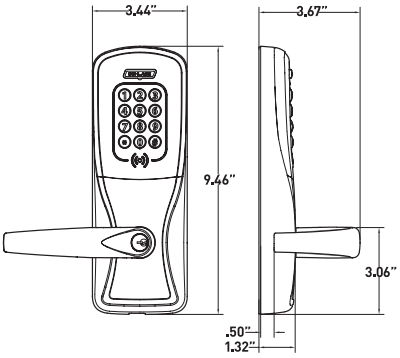

Interior

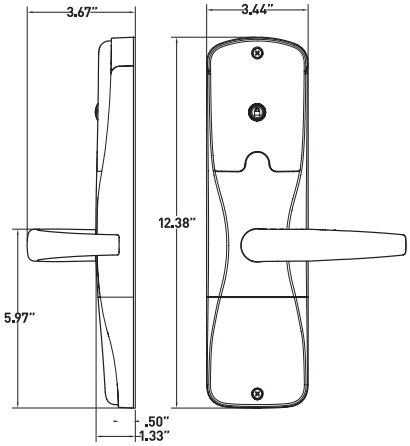

AD Series FMK Reader Modules

FIPS 201-1 compliant multi-technology

- FMK reader required for FIPS 201-1 compliant multi-technology and keypad reader supporting both proximity and smart credentials

+ KEYPAD

AD-201 Electronic Lock Specifications	
Credential verification time	≤ 1 second[1]
Visual/audible communications	Tri-colored LEDs and audible indicators (field configurable)
System interface	SUS mobile app on compatible Android devices with SUS-A Cable; also supported by legacy Schlage Handheld Devices (HHD)
Power supply	4AA, 8AA, 12 VDC or 24 VDC
Voltage range	4 VDC to 26 VDC
Max current requirement	Up to 250 mA
Battery life	Up to 2 yrs with 4AA
Operating temperature	Exterior: -31° to 151°F (-35° to 66°C) Interior: 32° to 120°F (0° to 49°C) (battery)
Operating humidity	0 - 100% non-condensing
Certifications	ANSI/BHMA A156.25; ANSI/BHMA Grade 1; UL 294; ULC S319; UL 10C 3 hour; FCC Part 15; Industry Canada (IC); ADA compliant; Cylindrical and mortise chassis only: TDI DR-464, DR-465; FL12400, FL4613, FL1592, FL13013, FL14482; Mortise chassis only: FL3905
Accessories	SUS-A Cable with SUS Android mobile app; also supported by legacy Handheld Devices (HHD)

Mechanical Specifications			
Chassis	**Cylindrical**	**Mortise**	**Exit trim**
Handing	Handed to order, field reversible		
ANSI standard (Meets or exceeds)	A156.25 locked outdoor A156.2 Series 4000 Grade 1	A156.25 locked outdoor A156.13 Series 1000 Grade 1	A156.25 locked outdoor A156.3 Grade 1
Door thickness	1-3/4" standard, 1-3/8" to 2-3/4" optional (available in 1/8" increments)		
Backset	Standard: 2-3/4" Optional: 2-3/8", 3-3/4", 5"	2-3/4" only	Defined by exit device
Latch bolt	Standard: 1/2" throw Optional: 3/4" throw	Standard: 3/4" throw Optional: 1" throw on mortise deadbolt	Provided by exit device
Levers	Pressure cast zinc, plated	Steel, plated	Steel, plated
Strike	Standard: 1-3/16" lip, ANSI, 1-1/4" x 4-7/8" Optional: Additional configurations available please see price book		Provided by exit device
Cylinder and keys	Standard: Schlage 6-pin Everest 29 S123 keyway Conventional cylinder with two patented keys. Additional keying options available, including interchangeable cores, competitor brands, master keying and grand master keying		

Multi-Technology Reader Specification	
Credential technologies	Proximity (125 kHz) and Smart (13.56 MHz)
Standards	ISO standard 15693 and ISO 14443
Maximum read range	Proximity: up to 1.25" Smart: up to 0.75"
Proximity credential support	Compatibility: Schlage®, ISONAS™, HID[2], GE/CASI ProxLite®, AWID® and LenelProx®
Smart credential support	Secure sector compatibility: Schlage MIFARE Classic®, Schlage MIFARE Plus®, Schlage MIFARE® DESFire®, PIV and PIV-I CSN only compatibility: HID iCLASS®, HID iCLASS SE®, Inside Contactless Pico Tag®, MIFARE Classic/Plus/DESFire, ST Microelectronics®, Texas Instruments Tag-It®, Phillips I-Code®
Certifications/standards	FCC, UL 294 Listed
Style/layout	Option for 12 button, 3x4 matrix backlit keypad

1. Verification time is dependent on size of user base.
2. Proximity bit lengths greater than 37 not supported.

Schlage Express Specifications	
Hardware	Intel Pentium II processor (Pentium III or IV recommended), CD-ROM, mouse or compatible pointing device, VGA or Super VGA monitor, keyboard
Hard disk space	250 MB for software; will require additional space for stored data
Memory	256 MB RAM minimum or the memory required for the operating system, whichever is greater
Operating system	Microsoft Windows XP, Windows 7 and Windows 8

Reports with the built-in viewer Internet Explorer 6 or higher must be installed.

Schlage Express AD-201 Specifications	
Users/audits	• 2,000 Users/audits with 50 AD-201 locks/devices • 1,000 Users/audits with 100 AD-201 locks/devices
User time zones	Limits the hours and days a user can access up to 8 assigned points
Holidays	Suspends normal operations for user defined periods per door during up to 16 non-normal days
PIN codes	• Supports up to 6 digit PIN codes • Duplicate PIN notification feature
Auto unlock schedules	Allows weekly repeating for automatic locking and unlocking of up to 16 defined

AD-201 Standalone System

PIV or PIV-1 credential → *MT-20 enrollment reader* → *Access control management system* → *SUS on Android mobile or legacy HHD with cable* → *AD-201 standalone electronic lock*

Schlage Utility Software

The Schlage Utility Software (SUS) mobile app on compatible Android mobile devices and SUS-A cable provides an easy way to manage people, audits and locks for simple access control management. Also supported by legacy Schlage Handheld Devices (HHD).

Schlage Utility Software

- Initialize lock and accessories
- Field configure devices
  - Credential reader formats
  - Lock function
  - Unlock period
  - Failure mode
  - Audible alarm on/off
- Service and diagnostics
  - Battery status
  - Validate hardware and software revision
  - Troubleshooting status signals
  - Firmware upgrades
- New device template simplifies configuration

Ordering Information

Available through one of our GSA schedule 84 approved distributions. BAA options available

AD - 201 - CY - 70 - FMK - SPA - 626 - P6 - S123 - RH - 4B - 13-247 - 10-025 - 134

Series	Class	Chassis	Function	Reader	Lever Style	Finish	Key Cylinder	Keyway	Handing	Battery	Backset & Latch or Armored Front	Strike	Door Thickness
1	2	3	4	5	6	7	8	9	10	11	12	13	14

Standard options are indicated with a dot. See price book for specific configuration options.

3 Chassis

CY	Cylindrical
MS	Mortise
MD	Mortise deadbolt
993R	Exit trim – Rim/CVC/CVR
993S	Exit trim – SVR
993M	Exit trim – mortise
993DT	Non-functioning dummy trim for exit

4 Function

40	Privacy
50	Office/classroom
60	Apartment
70	Storeroom

5 Reader

FMK	PIV and PIV-I compatible multi-technology + keypad (125 kHz and 13.56 MHz)

6 Lever

ATH	Athens
BRK	Boardwalk
BRW	Broadway
LAT	Latitude
LON	Longitude
RHO	Rhodes
SPA	Sparta
TLR	Tubular

Available with knurled surface.

7 Finish

605	Bright Brass
606	Satin Brass
612	Satin Bronze
619	Satin Nickel
625	Bright Chrome
626	Satin Chrome
626AM	Satin Chrome Antimicrobial
643e	Aged Bronze

8 Key Cylinder

P6	Schlage 6-pin conventional key-in-lever cylinder

See price book for other SFIC, FSIC and less cylinder options available. Compatible with Schlage®, Sargent®, Corbin Russwin, Medeco® and Yale®.

9 Keyway

• S123	Everest 29

See price book for other available keyway options including master keying.

10 Handing

• RH	Right handed
LH	Left handed

Field reversible.

11 Battery

• 4B	4AA
8B	8AA

12 Backset & Latch or Armored Front

• 13-247	Cylindrical: 2-3/4" backset deadlatch, square corner, 1-1/8" x 2-1/4"
• 09-663	Mortise: Armor front, 1-1/4" wide, square corner

See price book for mortise deadbolt and other backset and latch options or armor front options.

13 Strike

• 10-025	Cylindrical: 1-3/16" lip, ANSI, no box, 1-1/4" x 4-7/8"
• 10-072	Mortise: 1-3/16" lip, 1-1/4" x 4-7/8" square corner, box

See price book for other available strikes.

14 Door Thickness

• 134	1-3/4"

Other thicknesses available between 1-3/8" and 2-3/4" See price book for details.

Lever Styles

Conventional cylinders shown, SFIC and FSIC also available.

Athens

Boardwalk

Broadway

Latitude

Longitude

Rhodes

Sparta

Tubular

Finishes

605
Bright Brass

606
Satin Brass

612
Satin Bronze

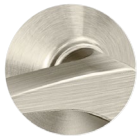
619
Satin Nickel

625
Bright Chrome

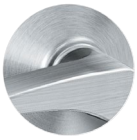
626
Satin Chrome

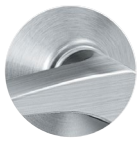
626AM
Satin Chrome Antimicrobial

643e
Aged Bronze

Allegion, the Allegion logo, Schlage, the Schlage logo and Falcon are trademarks of Allegion plc, its subsidiaries and/or affiliates in the United States and other countries. All other trademarks are the property of their respective owners.

© 2024 Allegion plc
009820, Rev. 01/24

AD-250

Standalone Electronic Lock

Overview

AD Series electronic locks from Schlage are designed to be modular and provide more options to choose from, more functionality in the lock and more compatibility with existing systems. Its patent-pending modular design allows the lock to be customized to fit the needs of an application now, and can change to meet future needs without removing it from the door.

Factory orderable options include choices of magnetic stripe credential readers, chassis type, locking functions, power options, lever styles and finishes. It also offers a wide selection of features that can be configured in the field to customize your openings.

The AD-250 is a unique solution in which the credential, not the lock, carries access rights on a magnetic stripe card. This allows dynamic rights management on the card without reprogramming each lock in the facility. And the lock still maintains an audit trail of events at the door. This makes it a smart and economical solution for campus-like environments with a large number of users and offline openings.

On all AD Series standalone locks, Schlage has built in many of the incremental features needed in a networked system such as request-to-exit and request-toenter sensors, interior cover tamper guard, as well as the door position switch. This way, if the customer chooses to network this opening in the future, all the components will be there to make the transition an easy one.

Features & Benefits

- Security that's more intelligent and convenient than traditional mechanical locking devices
- Audit trail reports that allow you to track usage
- Add users and access rights using credentials instead of having to visit each lock
- The ability to upgrade to a networked solution without removing the lock from the door
- Available in cylindrical, mortise, mortise deadbolt and exit trim
- Compatible with major brands of master key systems and exit devices

Exterior

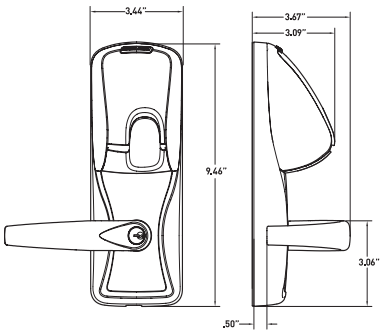

Interior

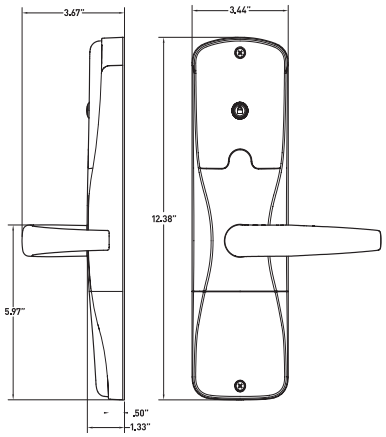

AD-250 Electronic Lock Specifications	
Users	Unlimited, dependent on software
Audits	Up to 10,000
Credential verification time	≤ 1 second
Visual/audible communications	Tri-colored LED's and audible indicators (field configurable)
System interface	SUS mobile app on compatible Android devices with SUS-A Cable; also supported by legacy Schlage Handheld Devices (HHD)
Power supply	4AA, 8AA, 12 VDC or 24 VDC
Voltage range	4 VDC to 26 VDC
Max current requirement	Up to 250 mA
Battery life	Up to 2 yrs with 4 AA batteries
Operating temperature	Exterior: -31° to 151°F (-35° to 66°C) Interior: 32° to 120°F (0° to 49°C) (batteries)
Operating humidity	0 - 100% non-condensing
Certifications	ANSI/BHMA A156.25, ANSI/BHMA Grade 1; UL 294; ULC S319; UL 10C 3 hour; FCC Part 15; Industry Canada (IC); ADA compliant; Cylindrical and mortise chassis only: TDI DR-464, DR-465; FL12400, FL4613, FL1592, FL13013, FL14482; Mortise chassis only: FL3905
Accessories	SUS-A Cable with SUS Android mobile app, magnetic stripe credential encoder (CL-Encoder 2)

Functions

- Storeroom[1]
- Office/classroom[1]
- Privacy
- Apartment

Standard Status Signals

- Lock/unlock status
- Mechanical key override
- Battery status

Schlage Utility Software

The Schlage Utility Software (SUS) mobile app on compatible Android mobile devices and SUS-A cable provides an easy way to manage people, audits and locks for simple access control management.

Schlage Utility Software

- Initialize lock and accessories
- Field configure devices
  - Credential reader formats
  - Lock function
  - Unlock period
  - Failure mode
  - Audible alarm on/off
- Service and diagnostics
  - Battery status
  - Validate hardware and software revision
  - Troubleshooting status signals
  - Firmware upgrades
- New device template simplifies configuration

1. Storeroom and office/classroom function not available with mortise deadbolt option. To ensure safety, all functions always allow for free egress.

Mechanical Specifications			
Chassis	**Cylindrical**	**Mortise**	**Exit trim**
Handing	Handed to order, field reversible		
ANSI standard (Meets or exceeds)	A156.25 A156.2 Series 4000 Grade 1	A156.25 A156.13 Series 1000 Grade 1	A156.25 A156.3
Door thickness	1-3/4" standard, 1-3/8" to 2-3/4" optional (available in 1/8" increments)		
Backset	Standard: 2-3/4" Optional: 2-3/8", 3-3/4", 5"	2-3/4" only	Defined by exit device
Latch bolt	Standard: 1/2" throw Optional: 3/4" throw	Standard: 3/4" throw Optional: 1" throw on mortise deadbolt	Provided by exit device
Levers	Pressure cast zinc, plated		
Strike	Standard: 1-3/16" lip, ANSI, 1-1/4" x 4-7/8" Optional: Additional configurations available please see price book		Provided by exit device
Cylinder and keys	Schlage 6-pin Everest 29 S123 keyway Conventional cylinder with two patented keys standard. Additional options available including SFIC, FSIC and competitor brands. See Lever & Cylinder Compatibility Data Sheet.		

AD Series exit trim is compatible with Von Duprin 98/99 and 98/99XP (rim, mortise, SVR; and CVC, CVR on metal doors only), Von Duprin 22/22F (rim and SVR) and Falcon 25 (rim) exit devices from Allegion. The AD Series is also compatible with select rim exit devices from Sargent, Corbin Russwin, Yale, Dorma and Precision.

For Von Duprin and Falcon solutions, a low current request-to-exit switch (RX-LC or AE) is recommended for future network migration.

Refer to the AD Series Exit Trim Compatibility Guide for additional details.

Available AD-250 Reader Options

Magnetic stripe (swipe)

- Triple track reader (1, 2 or 3), field configurable
- ABA, ISO76XX standard
- Reader can be cleaned without removing lock from door
- 12 button, 3x4 matrix backlit keypad

+ KEYPAD

Magnetic stripe (swipe)

- Triple track reader (1, 2 or 3), field configurable
- ABA, ISO76XX standard
- Reader can be cleaned without removing lock from door

Magnetic stripe (insertion)

- Triple track reader (1, 2 or 3), field configurable
- ABA, ISO76XX standard

+ KEYPAD

Magnetic stripe (insertion)

- Triple track reader (1, 2 or 3), field configurable
- ABA, ISO76XX standard

Ordering Information

Available through one of our GSA schedule 84 approved distributions.

AD	-	250	-	CY	-	70	-	MG	-	SPA	-	626	-	P6	-	S123	-	RH	-	4B	-	13-247	-	10-025	-	134
Series		Class		Chassis		Function		Reader		Lever Style		Finish		Key Cylinder		Keyway		Handing		Battery		Backset & Latch or Armored Front		Strike		Door Thickness
1		2		3		4		5		6		7		8		9		10		11		12		13		14

Standard options are indicated with a dot. See price book for specific configuration options.

3 Chassis

CY	Cylindrical
MS	Mortise
MD	Mortise deadbolt
993R	Exit trim – Rim/CVC/CVR
993S	Exit trim – SVR
993M	Exit trim – mortise
993DT	Non-functioning dummy trim for exit

4 Function

40	Privacy
50	Office/classroom
60	Apartment
70	Storeroom

5 Reader

MG	Magnetic stripe (insertion)
MGK	Magnetic stripe + keypad (insertion)
• MS	Magnetic stripe (swipe)
MSK	Magnetic stripe + keypad (swipe)
DT	Dummy trim

6 Lever

ATH	Athens
BRK	Boardwalk
BRW	Broadway
LAT	Latitude
LON	Longitude
RHO	Rhodes
SPA	Sparta
TLR	Tubular

Available with tactile warning options.

7 Finish

605	Bright Brass
606	Satin Brass
612	Satin Bronze
619	Satin Nickel
625	Bright Chrome
• 626	Satin Chrome
626AM	Satin Chrome Antimicrobial
643e	Aged Bronze

8 Key Cylinder

• P6	Schlage 6-pin conventional key-in-lever cylinder

See price book for other SFIC, FSIC and less cylinder options available. Compatible with Schlage®, Sargent®, Corbin Russwin, Medeco® and Yale®.

9 Keyway

• S123	Everest 29

See price book for other available keyway options including restricted keyways in Primus XP high security cylinders and master keying.

10 Handing

• RH	Right handed
LH	Left handed

Field reversible.

11 Battery

• 4B	4AA
8B	8AA

12 Backset & Latch or Armored Front

• 13-247	Cylindrical: 2-3/4" backset deadlatch, square corner, 1-1/8" x 2-1/4"
• 09-663	Mortise: Armor front, 1-1/4" wide, square corner

See price book for mortise deadbolt and other backset and latch options or armor front options.

13 Strike

• 10-025	Cylindrical: 1-3/16" lip, ANSI, no box, 1-1/4" x 4-7/8"
• 10-072	Mortise: 1-3/16" lip, 1-1/4" x 4-7/8" square corner, box

See price book for other available strikes.

14 Door Thickness

• 134	1-3/4"

Other thicknesses available between 1-3/8" and 2-3/4" See price book for details.

Lever Styles

Conventional cylinders shown, SFIC and FSIC also available.

Athens

Boardwalk

Broadway

Latitude

Longitude

Rhodes

Sparta

Tubular

Finishes

605
Bright Brass

606
Satin Brass

612
Satin Bronze

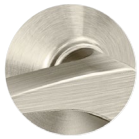
619
Satin Nickel

625
Bright Chrome

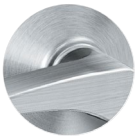
626
Satin Chrome

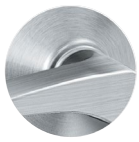
626AM
Satin Chrome Antimicrobial

643e
Aged Bronze

Allegion, the Allegion logo, Schlage, the Schlage logo and Falcon are trademarks of Allegion plc, its subsidiaries and/or affiliates in the United States and other countries. All other trademarks are the property of their respective owners.

© 2024 Allegion plc

004436, Rev. 01/24

AD Series

Exit Trim Compatibility

Overview

The AD Series electronic lock is available in 993 Exit Trim for use on openings that require exit devices for either retrofit or new construction applications. Offline and networked solutions are available. The 993 Exit Trim was designed to suite with AD Series cylindrical and mortise locksets to ensure that the facility remains aesthetically consistent. The AD Series 993 Exit Trim utilizes universal hardware to simplify installation of offline trim to a variety of exit devices, including rim style from Von Duprin, Falcon, Sargent,® Precision™, Corbin Russwin, Dorma,® and Yale®.

Available Exit Trim Styles:

- 993R – Rim, concealed vertical rod or concealed vertical cable (CVR/CVC for metal doors only)
- 993S – Surface vertical rod
- 993M – Mortise

Exit Device Compatibility for AD-200/250, AD-300/302, AD-400/402[3]

Brand	Compatible Exit Devices	Rim	SVR	CVR	CVC	Mortise
Von Duprin®	98/99 and 98/99XP	●	●	●[1]	●[1]	●
Von Duprin®	78 Series	●	●	●[1]		
Von Duprin®	22/22F	●	●			
Falcon®	25 Series	●				
Sargent®	80 Series[4]	●				
Corbin Russwin®	5000[4]	●				
Yale®	7000[4]	●				
Dorma®	9300[4]	●				
Precision™	21[4] (2100 converts to 21 with Precision's BP21 kit)	●				

1. For metal doors only
2. Narrow design and reversible rim exits not compatible.
3. The proper low current request to exit switch (RX-LC) is required for AD-300/302 and AD-400/402. Part numbers for request to exit switch:
   - Von Duprin: 050281
   - Falcon: 650359
4. Performance using exit devices other than Von Duprin or Falcon may vary and is dependent on competitive switches.

Features & Benefits

- Multiple credential reader options
- Offline and networked communication options
- A wide variety of finishes and lever styles
- Power options that include hardwired (12 VDC or 24 VDC) or batteries (4AA or 8AA)
- Compatible with all Schlage Conventional, FSIC and SFIC formatted cylinders including many competitive OEM cylinders such as Sargent,® Corbin Russwin, Medeco® and Yale®

Available AD Series Reader Modules[2]

- Multi-technology (125 kHz proximity, 13.56 MHz smart card and NFC mobile)
- FIPS 201-2 compliant multi-technology (125 kHz proximity and 13.56 MHz smart card)
- Smart –HID support
- Magnetic stripe
- Keypad only
- All credential readers available + keypad

Available Communication Options

- AD-400: Networked wireless locks
- AD-402: Networked wireless locks - FIPS 201-2 compliant
- AD-300: Networked hardwired locks
- AD-302: Networked hardwired locks - FIPS 201-2 compliant
- AD-250: Offline, access rights stored on the magnetic stripe credential
- AD-200: Offline, access rights stored on the lock

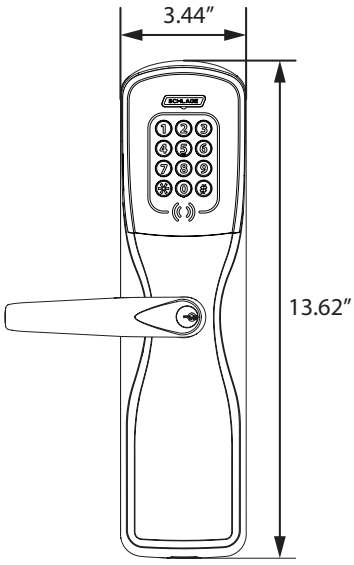

Exterior view[3]

AD Series - 993 Exit Trim

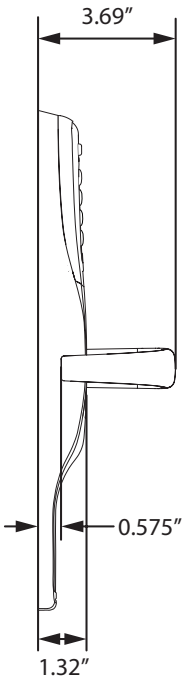

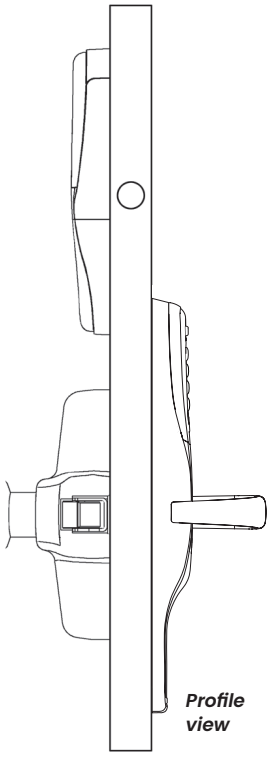

Profile view

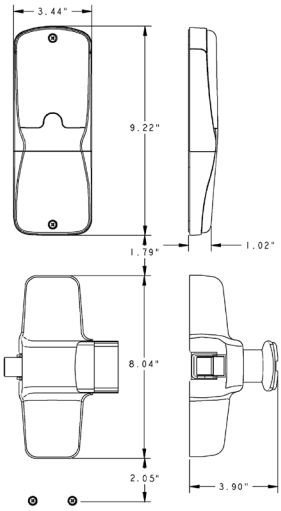

Interior view[1]

AD-200/250/300/302 - all styles

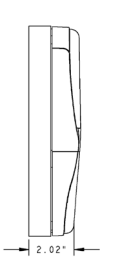

Side view

AD-200/250/300/302 – rim/CVR/CVC or mortise

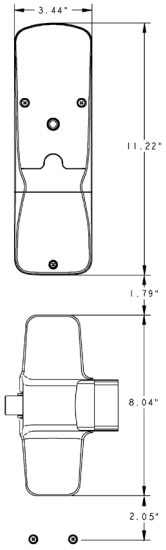

Side view

AD-200/250/300/302 SVR

Interior view

AD-400/402 all styles

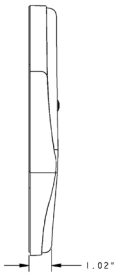

Side view

AD-400/402 rim/CVR/CVC or mortise

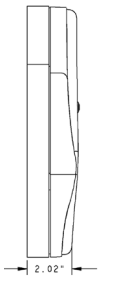

Side view

AD-400/402 SVR

1. AD-300/302 includes LED indicator
2. Unlike other AD Series chassis styles, upgrading reader modules on the 993 Exit Trim requires the exterior escutcheon to be removed from the door
3. (2) #7 fasteners with decorative washers located 11.88" below bottom edge of lock

Allegion, the Allegion logo, Falcon, Schlage, the Schlage logo and Von Duprin are trademarks of Allegion plc, its subsidiaries and/or affiliates in the United States and other countries. All other trademarks are the property of their respective owners.

© 2024 Allegion plc
004382, Rev. 10/24

AD Series & CO Series

Lever & Cylinder Compatibility

Overview

AD Series and CO Series electronic locks come standard with the Schlage® 6-pin Everest 29™ S123 keyway and two patented keys. The Everest 29 keyway's patentprotected undercut design with protection through 2029 is available in open and restricted keyway families. Patented restricted keyways, such as the Everest 29 R and T families, deliver a higher level of security by requiring authorization to access key blanks for duplication. Improve both administrative and physical security with the application of Primus XP cylinders and gain the option to also employ high-security UL 437 cylinders. The Everest 29 design enables a key blank that is backwards compatible to legacy Everest keyways allowing Everest 29 keys to work with existing Everest systems aiding the key system migration process.

The AD Series and CO Series can also be ordered with other popular Schlage keyways or prepared to receive Falcon® Conventional key-in-lever cylinders or Small Format Interchangeable Core (SFIC) cylinders. Less cylinder options are available to provide compatibility with Conventional, LFIC or SFIC cylinders of other manufacturers including, Sargent,® Corbin Russwin,® Medeco® and Yale.®

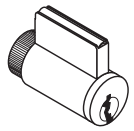

Conventional key-in-lever

P, P6, Z, L, L-SAR, L-FA7

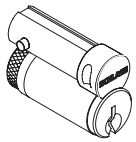

Full Size Interchangeable Core

R, M, J-SAR, J-CO6, J-CO7, J-MED, J-YA6, J-YA7

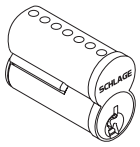

Small Format Interchangeable Core

G7, B

Features & Benefits

- The key-in-lever design of AD and CO Series fits a full range of Schlage cylinders featuring administrative security options from open to patented and patented restricted keyways
- Primus cylinder and key options provide enhanced physical security in the cylinder including a UL 437 listed high-security option and a patent protected key design with geographic exclusivity
- Levers are offered in a wide variety of finishes and styles
- Compatible with all Schlage Conventional, FSIC, SL (as Conventional and FSIC), and SFIC formatted cylinders including many competitive OEM cylinders
- SL cylinder option allows an Everest 29 R or legacy Everest B keyway facility to gain a Primus program level security
- AD and CO 993 exit trim is compatible with a variety of exit devices including rim style from Von Duprin, Falcon, Sargent,® Precision,™ Corbin Russwin,® Dorma® and Yale.®

Lever & Cylinder Compatibility

				Cylinder type			Lever style							
Ordering suffix	**Application (made to accept)**	**With cylinder**	**Pins**	**KIL**	**FSIC**	**SFIC**	**ATH**	**BRK**	**BRW**	**LAT**	**LON**	**RHO**	**SPA**	**TLR**
P	Schlage® - (6-pin, keyed 5)	●	6	●			●	●	●	●	●	●	●	●
P6	Schlage - Everest 29 S (default)	●	6	●			●	●	●	●	●	●	●	●
Z	Schlage SL - Everest 29 R keyways	●	7	●			●	●	●	●	●	●	●	●
L	Schlage, Falcon®		6	●			●	●	●	●	●	●	●	●
R	Schlage - Everest 29 S (default)	●	6		●		●	●	●	●	●	●	●	●
M	Schlage SL - Everest 29 R keyways	●	7		●		●	●	●	●	●	●	●	●
J	Schlage		6		●		●	●	●	●	●	●	●	●
G7	Schlage Everest 29 R keyways	●	7			●	●	●	●	●	●	●	●	●
B	Schlage, Falcon, Competitive OEM's		7			●	●	●	●	●	●	●	●	●
L-FA7	Falcon		7	●				●	●	●	●	●	●	
L-SAR	Sargent® (10L+11L)		6	●			●	●	●	●	●	●	●	●
J-SAR	Sargent 6300		6		●		●	●	●	●	●	●	●	●
J-CO6	Corbin® 8000		6		●		●	●	●	●	●	●	●	●
J-CO7	Corbin 8000-7		7		●			●	●	●	●	●	●	●
J-MED	Medeco® 32*0201		6		●			●	●	●	●	●	●	
J-YA6	Yale® 1210 or Medeco 31*0100		6		●		●	●	●	●	●	●	●	●
J-YA7	Yale 1220		7		●			●	●	●	●	●	●	

Lever Styles

Conventional cylinders shown, SFIC and FSIC also available.

Athens

Boardwalk

Broadway

Latitude

Longitude

Rhodes

Sparta

Tubular

Finishes

605
Bright Brass

606
Satin Brass

612
Satin Bronze

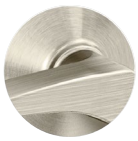
619
Satin Nickel

625
Bright Chrome

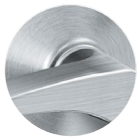
626
Satin Chrome

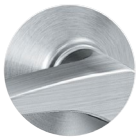
626AM
Satin Chrome Antimicrobial

643e
Aged Bronze

Allegion, the Allegion logo, Schlage and the Schlage logo are trademarks of Allegion plc, its subsidiaries and/or affiliates in the United States and other countries. All other trademarks are the property of their respective owners.

© 2024 Allegion plc
010432, Rev. 01/24

PIM400-485

Panel Interface Module for RS-485 Communication

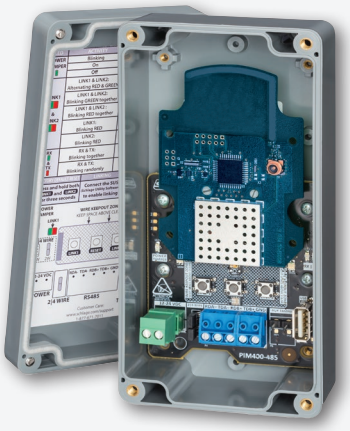

Overview

The PIM400-485 seamlessly integrates to select access control panels via RS-485, eliminating the need for reader interface modules. Each PIM400-485 supports up to 16 wireless access devices such as AD-400/401 locks.

Reliability

Reliable communications result from incorporated technologies and features. 900 MHz spread spectrum technology enables high transmission power in a license-free band. Error detection algorithm maintains data integrity on each transmission, and redundant transmissions ensure communication success. Periodic "heartbeat" signals provide supervision and assure reliable RF communications are maintained. Lastly, dynamic channel switching (DCS) can be enabled to overcome harsh RF environments by automatically changing channels to avoid potential interference.

Security

Used extensively by government and military organizations, spread spectrum technology provides significant security advantages over conventional transmission methods. Wireless access devices utilize spread spectrum transmissions, which are encrypted with AES 128-bit keys, to yield a system that is virtually uncompromisable. In addition, scalability is virtually unlimited as each AD-Series wireless access module has nearly a million addresses to choose from during the linking process.

Centralized Lock/Unlock Command in 10 Seconds or Less

The Wake-Up on Radio (WOR) feature drives communication from the PIM400 to any or all linked wireless devices in 10 seconds or less. This innovative feature works efficiently in parallel with periodic "heartbeat", to maintain up to 2 year battery life on wireless devices such as the AD-400/401 locks. Response rate can be field configured down to 1 second with consideration of battery life. When Wake-Up on Radio is used in critical applications, dynamic channel switching should also be enabled.

Features & Benefits

- 900 MHz spread spectrum RF technology for long range, reliable communications
- Automatic linking to remote wireless access points with 10 channel frequencies to select from enables easy commissioning
- AES-128 bit encrypted spread spectrum transmissions
- 5 visual indicators to quickly pinpoint and display status
- Flash memory for easy firmware upgrades
- Redesigned with smaller footprint

CYBERSECURITY
Learn about Allegion's commitment

PIM400-485 Specifications	
Frequency range	902-928 MHz
Modulation	900 MHz spread spectrum, direct sequence, 10 channels
RF interference avoidance	Optional dynamic channel switching
Transmission/encryption	AES-128 bit key (optional)
Credential verification time	< 1 second[1]
Communication range	Up to 200 ft (61 m) with obstructions Up to 1,000 ft (305 m) clear line of sight Up to 2,000 ft (609 m) line of sight with high gain antenna on PIM400 Up to 4,000 ft (1219 m) line of sight with high gain antennas on PIM400 and WRI400
Visual/audible communications	5 LEDs for status indicators
System interface	RS-485
Power supply	12 VDC or 24 VDC
Voltage range	9.5 VDC to 26 VDC
Max current requirement	Up to 250 mA
Operating temperature	-31° to 151°F (-35° to 66°C)
Operating humidity	0% to 100% non-condensing
Dimensions (H x W x D)	6.3" x 3.2" x 2.2" (16.0 cm x 8.13 cm x 5.59 cm)
Weight	1.25 lb (.56 kg)
Cable specifications	DC power Input: 18AWG, 2 conductor (Belden 8760 or equivalent) up to 1,000 ft (305 m) PIM400-485 to ACP: 24AWG, 2 or 4 conductor shielded (Belden 9842, 9841 or equivalent) up to 4,000 ft (1219 m)
Data rate	RF: 40 kbps; RS-485: 9.6 kbps
Certifications	NEMA 1, 4, 4X, 6; UL 294; ULCS319; FCC Part 15; Industry Canada (IC); RoHS

1. Dependant on latency time of access control panel.

Additional Features

Reliable Communications

900 MHz band enables longer transmission ranges. In general, signal propagation with longer wavelengths travel a greater distance and penetrate through, and around objects better than signals with shorter wavelengths.

Online Communications (Heartbeat)

Regular communications between the AD-Series wireless access module and PIM400 monitor transmission presence and integrity. Online communications enable the PIM400 to download information or instructions such as unlock and relock.

Auto Addressing (Linking)

One of the final steps in the installation process is called "linking". Linking ties a specific wireless access module to a selected PIM400 and assigns a unique address. There are over 65,000 unique addresses available per channel, providing nearly a million combinations for virtually unlimited scalability.

Assured Communications

A Packet-Error-Rate-Test (PERT) is performed during linking at reduced power levels to ensure reliable communication during operation.

Encoded Transmissions

Each RF transmission is encrypted with AES-128 bit keys to provide virtually uncompromisable security.

Tamper

The PIM400 cover is monitored by an optical tamper switch.

Visual indications

- Power on
- Microprocessor running
- Linking status
- PIM receiving RF data
- PIM transmitting RF data
- PIM receiving RS-485 data
- PIM transmitting RS-485 data
- PIM firmware version
- PIM tamper status

Access point status available through RS-485 connection

- Card and keypad data
- Door position
- Loss of RF communication
- Request-to-exit
- Request-to-enter
- Low battery
- PIM tamper
- Mechanical key override
- Deadbolt position
- Interior cover tamper guard
- Lock/unlock status
- Interior push button

Configurable items from PIM400-485

- Wake-Up on Radio (WOR)
- Heartbeat frequency
- Relock parameters
- Card data format conversion
- Extended unlock
- Fail safe/fail secure/fail as-is
- Door held pre-alarm
- Cache memory parameters
- Dynamic channel switching (DCS)
- Reader configuration
- Keypad configuration
- Inside pushbutton configuration
- User interface configuration

Ordering Information

PIM400-485 – Panel Interface Module with outdoor enclosure standard. Supports up to 16 access points via RS-485 with select brands of access control panels

Optional accessories

- **ANT400-REM-I/O** – Omni-directional remote indoor/outdoor antenna module. Requires available grounding kit (MGB+MCA5) for outdoor installations
- **ANT400-REM-I/O+6dB** – Directional, flat panel, remote indoor/outdoor antenna with 6dB of gain. Requires available grounding kit (MGB+MCA5) for outdoor installations
- **MGB+MCA5** – Grounding kit for outdoor installations
- **ANT400-REM-CEILING** – Omni-directional ceiling mount indoor remote antenna
- **ANT400-REM-HALL** – Bi-directional indoor hall application remote antenna
- **SUS-A Cable** – for use with SUS mobile app on compatible Android™ devices
- **593PI-12DC** – 12 VDC power supply

Allegion, the Allegion logo, Falcon, Schlage, the Schlage logo, and Von Duprin are trademarks of Allegion plc, its subsidiaries and/or affiliates in the United States and other countries. All other trademarks are the property of their respective owners.

© 2024 Allegion plc
004447, Rev. 01/24

PIM400-TD2

Panel Interface Module Wiegand or Clock & Data Communication

Overview

The PIM400-TD2 seamlessly integrates to virtually any access control panel and their reader interface modules via Wiegand or Clock & Data protocols. Each PIM400-TD2 supports up to two wireless access devices such as AD-400/401 Series locks.

Reliability

Reliable communications result from incorporated technologies and features. 900 MHz spread spectrum technology enables high transmission power in a license-free band. Error detection algorithm maintains data integrity on each transmission and redundant transmissions ensure communication success. Periodic "heartbeat" signals provide supervision and assure reliable RF communications are maintained. Lastly, dynamic channel switching (DCS) can be enabled to overcome harsh RF environments by automatically changing channels to avoid potential interference.

Security

Used extensively by government and military organizations, spread spectrum technology provides significant security advantages over conventional transmission methods. Wireless access devices utilize spread spectrum transmissions, which are encrypted with AES-128 bit keys, to yield a system that is virtually uncompromisable. In addition, scalability is virtually unlimited as each AD Series wireless access module has nearly a million addresses to choose from during the linking process.

Centralized lock/unlock command in 10 seconds or less

The Wake-Up on Radio (WOR) feature drives communication from the PIM400 to any or all linked wireless devices in 10 seconds or less. This innovative feature works efficiently in parallel with periodic "heartbeat" to maintain up to 2 year battery life on wireless devices such as the AD-400/401 locks. Response rate can be field configured down to 1 second with consideration of battery life. When Wake-Up on Radio is used in critical applications, dynamic channel switching should also be enabled.

Features & Benefits

- 900 MHz spread spectrum RF technology for long range, reliable communications
- Supports up to two AD Series wireless devices
- Automatic linking to remote wireless access points with 10 channel frequencies to select from enables easy commissioning
- AES-128 bit encrypted spread spectrum transmissions
- 13 visual indicators to quickly verify operation and troubleshoot
- Flash memory for easy software upgrades

CYBERSECURITY
Learn about Allegion's commitment

PIM400-TD2 Specifications	
Frequency range	902-928 MHz
Modulation	900 MHz spread spectrum, direct sequence, 10 channels
RF interference avoidance	Optional dynamic channel switching
Transmission/encryption	AES-128 bit key (optional)
Credential verification time	< 1 second[1]
Communication range	Up to 200 ft (61 m) with obstructions Up to 1000 ft (305 m) clear line of sight Up to 2000 ft (609 m) line of sight with high gain antenna on PIM400 Up to 4000 ft (1219 m) line of sight with high gain antennas on PIM400 and WRI400
Visual/audible communications	13 LEDs for status indicators
System interface	Wiegand (data1/data0) or magnetic stripe (Clock & Data)
Power supply	12 VDC or 24 VDC
Voltage range	9.5 VDC to 26 VDC
Max current requirement	Up to 250 mA
Operating temperature	-31° to 151°F (-35° to 66°C)
Operating humidity	0 - 100% non-condensing
Dimensions (H x W x D)	7.1" x 7.1" x 3.0" (18.0 cm x 18.0 cm x 7.6 cm)
Weight	1.25 lb (.56 kg)
Cable specifications	DC power Input: 18AWG, 2 conductor (Belden 8760 or equivalent) up to 1000 ft (303 m) PIM400-TD2 to ACP: 22AWG, 8 conductor shielded (Alpha 1298C or equivalent) up to 500 ft (152 m)
Data rate	RF: 40 kbps
Certifications	NEMA 1, 4, 4X, 6; UL 294; ULC S319; FCC Part 15; RoHS; Industry Canada (IC)

1. Dependant on latency time of access control panel.

Additional Features

Reliable Communications

900 MHz band enables longer transmission ranges. In general, signal propagation with longer wavelengths travel a greater distance and penetrate through, and around objects better than signals with shorter wavelengths.

Online Communications (Heartbeat)

Regular communications between the AD Series wireless access module and PIM400 monitor transmission presence and integrity. Online communications enable the PIM400 to download information or instructions such as unlock and relock.

Auto Addressing (Linking)

One of the final steps in the installation process is called "linking". Linking ties a specific wireless access module to a selected PIM400 and assigns a unique address. There are over 65,000 unique addresses available per channel, providing nearly a million combinations for virtually unlimited scalability.

Assured Communications

A packet-error-rate-test (PERT) is performed during linking at reduced power levels to ensure reliable communication during operation.

Encoded Transmissions

Each RF transmission is encrypted with AES-128 bit keys to provide virtually uncompromisable security.

Tamper

The PIM400 cover is monitored by a tamper switch.

Visual LED indications
- Power on
- Microprocessor running
- Linking status to WAPM
- PIM transmitting RF data
- PIM receiving RF data
- PIM receiving data
- PIM transmitting data
- Door position
- PIM tamper status
- PIM firmware version
- Wiegand and Clock & Data status 1 & 2
- Door status 1 & 2
- Trouble 1 & 2

Standard open collector contacts
- Configurable for normally open or normally closed
- Door position
- Request-to-exit
- Request-to-enter
- Trouble

Optional relay board (RLBD) to achieve dry contact
- Configurable for normally open or normally closed
- Door position
- Request-to-exit
- Request-to-enter
- Trouble

Access point status available through PIM400-TD2
- Wiegand or magnetic stripe card data
- Door position
- Request-to-exit
- Request-to-enter (optional)
- Trouble
- Loss of RF communication
- Low battery
- PIM tamper
- Reader tamper

Configurable items from PIM400-TD2
- Wake-Up on Radio (WOR)
- Heartbeat frequency
- Relock parameters
- Card data format conversion
- Extended unlock
- Fail safe/fail secure/fail as-is
- Door held pre-alarm
- Cache memory parameters
- Dynamic channel switching (DCS)
- Reader configuration
- Keypad configuration
- User interface configuration

Ordering information

PIM400-TD2 – Panel Interface Module with outdoor enclosure standard. Supports up to two access points via Wiegand or Clock & Data with virtually any access control panel.

Optional accessories

- **ANT400-REM-I/O** – Omni-directional remote indoor/outdoor antenna module. Requires available grounding kit (MGB+MCA5) for outdoor installations
- **ANT400-REM-I/O+6dB** – Directional, flat panel, remote indoor/outdoor antenna with 6dB of gain. Requires available grounding kit (MGB+MCA5) for outdoor installations
- **MGB+MCA5** – Grounding kit for outdoor installations
- **ANT400-REM-CEILING** – Omni-directional ceiling mount indoor remote antenna
- **ANT400-REM-HALL** – Bi-directional indoor hall application remote antenna
- **SUS-A Cable** – for use with SUS mobile app on compatible Android™ devices
- **593PI-12DC** – 12 VDC power supply

Note: Available through one of our GSA schedule 84 approved distributors.

Allegion, the Allegion logo, Falcon, Schlage, the Schlage logo, and Von Duprin are trademarks of Allegion plc, its subsidiaries and/or affiliates in the United States and other countries. All other trademarks are the property of their respective owners.

© 2024 Allegion plc
004441, Rev. 01/24

PIM400-1501-LC

16 Door Intelligent Controller for AD Series Wireless Devices; Powered by Mercury

Overview

The Schlage intelligent controller powered by Mercury is designed to provide a complete and cost effective IP addressable access control solution for up to 16 wireless AD Series devices. By combining the strength of the AD Series wireless PIM400 with customized functionality of the LP1501 intelligent controller from Mercury, this single device provides a compact solution that simplifies installation and cost of implementation. LP1501 controller is not included and must be purchased separately.

The PIM400-1501-LC can extend a facility's access control to remote locations and can be centrally managed by an IP network connection. By having an IP connection you can easily hook on to the existing network without the need for additional wiring requirements such as RS232 or RS485 cables. By leveraging the full portfolio of Schlage Wireless devices including the AD-400 locksets, WPR400 portable readers, and WRI400 reader interfaces there is the ability to support a broad range of applications including traditional openings that may require electric strikes or wall mounted readers.

The PIM400-1501-LC is pre-wired with external RJ-45 and USB connections. To further simplify installation, the device can be Powered over Ethernet (PoE) or receive 12VDC supply.

Once configured, the PIM400-1501-LC functions independently of the host in the event network connectivity is lost. Thus, the PIM400-1501-LC can continue to manage access control to up to 16 wireless devices even when the network is disconnected. The intelligence of the PIM400-1501-LC extends beyond just its capacity for 240,000 cardholders and 50,000 audit events to include the ability to manage elaborate interdependencies among the devices.

Features & Benefits

- Standard IP addressable intelligent controller for up to 16 AD Series wireless devices
- Decentralized system intelligence capable of managing up to 240,000 cardholders and 50,000 transactions in memory if temporarily disconnected from network
- PoE compliant to IEEE 802.3af
- Optional 12VDC external power supply to achieve UL294 Listing
- 900 MHz communication between PIM4001501-LC and AD Series wireless devices for secure, AES-128 bit encrypted transmission
- Wireless lockdown/unlock feature (10 seconds or less) preserves up to 2 year battery life in wireless device
- External RJ-45 and USB connectors for simplified installation and use
- Capable of managing a combination of AD-400, WPR400, and WRI400 devices for applications ranging from traditional doors to elevators and parking gates

CYBERSECURITY
Learn about Allegion's commitment

PIM400-1501-LC 16 Door Intelligent Controller	
Modulation / encryption	900 MHz spread spectrum, direct sequence, 10 channels, AES-128 bit key
Frequency range	902-928 MHz
Credential verification time	< 1 second[1]
Communication range	Up to 200 ft (61 m) indoor range, with normal building obstructions Up to 1000 ft (305 m) clear line of sight Up to 2000 ft (609 m) line of sight with high gain antenna on PIM400 Up to 4000 ft (1219 m) line of sight with high gain antennas on PIM400-1501-LC and WRI400.
RF interference avoidance	Configurable Dynamic Channel Switching
Operating temperature	32° to 151°F (0° to 66°C)
Humidity	10% to 95% relative humidity non-condensing
Power input	PoE, 12.95W compliant to IEEE 802.3af or 12VDC +- 10% 400mA max power supply
Communication to host	10 Base-T / 100Base-TX
Intelligent controller memory	240,000 cardholders, 50,000 transaction buffer 32 Access levels per cardholder Activation/deactivation dates
Dimensions (H x W x D)	10.43" x 7.28" x 3.79" (26.49 cm x 18.49 cm x 9.63 cm)
Weight	2.8 lbs.
Certifications	FCC Part 15; Industry Canada(IC); RoHS; ULC S319; UL294 Listed[2] when connected to UL294 power supply

1. Lock requires less than 100 msec, response time does not include latency time of ACP.
2. Confirm with your Physical Access Control Software (PACS) provider.

Optional Accessories

- **ANT400-REM-I/O** – Omni-directional remote indoor/ outdoor antenna module. Requires available grounding kit (MGB+MCA5) for outdoor installations
- **ANT400-REM-I/O+6dB** – Directional, flat panel, remote indoor/outdoor antenna with 6dB of gain. Requires available grounding kit (MGB+MCA5) for outdoor installations
- **MGB+MCA5** – Grounding kit for outdoor installations
- **ANT400-REM-CEILING** – Omni-directional ceiling mount indoor remote antenna
- **ANT400-REM-HALL** – Bi-directional indoor hall application remote antenna
- **SUS-A Cable** – for use with SUS mobile app on compatible Android™ devices
- **WPR400** – Wireless Portable Reader
- **WRI400** – Wireless Reader Interface
- **REPTR400** – Wireless Repeater

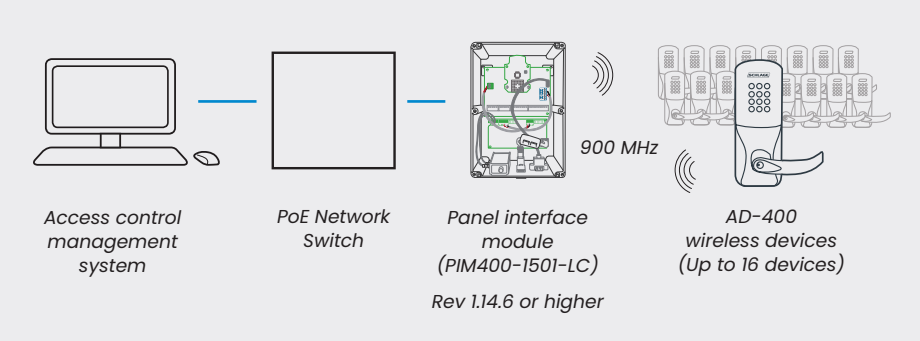

PIM400-1501-LC has RJ-45 and USB external connectors to make installation easy.

Allegion, the Allegion logo, Schlage and the Schlage logo are trademarks of Allegion plc, its subsidiaries and/or affiliates in the United States and other countries. All other trademarks are the property of their respective owners.

© 2024 Allegion plc
005131, Rev. 01/24

TK400

AD Series
Wireless Test Kit

Overview

The Schlage AD Series TK400 Wireless Test Kit can help you evaluate system design on new AD-400 wireless networked systems prior to installation. The TK400 can also be used to diagnose communication strength on existing AD-400 wireless applications. AD-400 locks and devices including the Wireless Reader Interface (WRI400), and Wireless Portable Reader (WPR400) communicate via 900 MHz frequency to the Panel Interface Module (PIM400); the PIM400 is required for communication between the AD-400 devices and the access control panel.

The TK400 Wireless Test Kit contains a Wireless Portable Signal Tester (WPR400-DT), a Panel Interface Module (PIM400-TD2), a PIM400 power supply, 8 AA alkaline batteries, and a convenient carrying case. The WPR400-DT operates on batteries, making it convenient and easy to maintain on job sites.

The Wireless Portable Signal Tester (WPR400-DT) is used to communicate to the PIM400 as an access control module. LED lights provide intuitive feedback about the quality of the signal.

The communication range of the AD-400 to the PIM400 is up to 200 feet with normal building construction and up to 1000 feet with clear line of sight. The TK400 can be used to determine the proper location of each Panel Interface Module (PIM) to optimize system design. When installed properly, an AD-400 wireless solution is an extremely reliable and cost effective alternative to a hardwired networked system.

Features & Benefits

- Allows you to test the range of 900 MHz signals between AD-400 devices and PIM400 to ensure proper location prior to installation of complete system.
- Can be used to test existing installations for signal strength
- LED light feedback for signal strength communication; green for strong connection, red for weak connection
- Kit comes complete with:
  - Wireless portable signal tester (WPR400-DT)
  - Panel Interface Module (PIM400-TD2)
  - Power supply for PIM400-TD2
  - 8 AA off-the-shelf batteries
  - Carrying case
- WPR400-DT certifications: FCC Part 15, Industry Canada (IC), RoHS
- PIM400-TD2 certifications: NEMA 1, 4, 4X, 6; UL 294, FCC Part 15, Industry Canada (IC), RoHS

CYBERSECURITY
Learn about Allegion's commitment

Wireless Portable Signal Tester	
Frequency range	902-928 MHz
Modulation	900 MHz spread spectrum, direct sequence, 10 channels
Communication	Up to 200 ft with obstructions (normal building); up to 1000 ft clear line of sight
Operating temperature	0°C (32°F) to 49°C (120°F)
Humidity	0% to 100% non-condensing
Battery type	8AA alkaline batteries
Dimensions (H x W x D)	2.375" x 5.0" x 6.25" (6.03 cm x 12.7 cm x 15.88 cm)
Certifications	• FCC Part 15 • Industry Canada (IC) • RoHS

PIM400-TD2	
Frequency range	902-928 MHz
Modulation	900 MHz spread spectrum, direct sequence, 10 channels
Communication	Up to 200 ft with obstructions (normal building); up to 1000 ft clear line of sight
Operating temperature	-31° to 151°F (-35° to 66°C)
Humidity	0% to 100% condensing
Power supply	12 VDC or 24VDC (12 VDC power supply included)
Dimensions (H x W x D)	7.1" x 7.1" x 3.0" (18.0 cm x 18.0 cm x 7.6 cm)
Weight	1.25 lb (.56 kg)
Certifications	• NEMA 1, 4, 4X, 6 • UL 294 • FCC Part 15 • Industry Canada (IC) • RoHS

Available through one of our GSA schedule 84 approved distributors

Visual LED Indications

- Wireless signal quality
- Low battery

Visual LED Indications

- Power on
- Linking status to AD-400 devices
- PIM transmitting/receiving RF data

Allegion, the Allegion logo, Schlage and the Schlage logo are trademarks of Allegion plc, its subsidiaries and/or affiliates in the United States and other countries. All other trademarks are the property of their respective owners.

© 2024 Allegion plc
004094, Rev. 01/24

WPR400

AD Series Wireless Portable Reader

Overview

The Schlage® AD Series Wireless Portable Reader (WPR400) was designed to extend a facility's access control to remote locations, at a moment's notice.

The WPR400 is a portable device that utilizes the same credential reader module as an AD Series electronic lock. The WPR400 can be held by hand or placed in a convenient temporary location to allow for credential verification. Whether it is at a temporary check point or bus load registration, the WPR400 will provide simple, intuitive feedback to the user if the credential being presented is valid or invalid via real time connectivity to the access control system.

The WPR400, as well as other AD-400 locks and devices, communicate via 900MHz frequency to the Panel Interface Module (PIM400); the PIM400 is required for communication between the AD-400 devices and the access control panel.

The WPR400 was designed to be intuitive to use and easy to set up, which is critical in situations where there is a need for remote credential verification. At power-on and within range, the WPR400 is ready to accept its first credential within moments of powering up and reconnecting to the previously paired PIM400. After the credential has been authenticated by the access control system, the WPR400 provides intuitive LED light feedback.

The WPR400 also has the ability to be configured to cache mode. When enabled, the WPR400 keeps a local database of valid access grants. Upon moving the WPR400 to an offline location away from the PIM400, credentials can be verified for the last 1000 valid users.

Finally, the WPR400 can be manually configured to operate as a wireless portable tester. In Wireless Test Mode, the device can be used to evaluate the location of PIM400s and AD-400 devices within a specific environment, or the existing reader module can remain installed on the WPR400.

1. Refer to the Schlage mobile credential compatibility chart for a list of certified devices.

Features & Benefits

- Fully compatible with Schlage AD Series credential reader modules and Panel Interface Modules
- Credential support includes Schlage MIFARE®, NFC mobile[1], proximity, magnetic stripe, and keypad. Refer to AD-400 data sheet for more detail.
  - Optional support for HID® smart and NFC mobile credentials
- Card reader options available with keypad for multi-factor authentication
- Cache mode option for offline applications
- Field configurable to work as a wireless portable signal tester
- Configured with the SUS Android mobile app and SUS-A Cable
- LED indicators communicate valid (green) and invalid (red) credential status
- Communicates to access control system via PIM400
- Comes with 8 AA off-the-shelf batteries

CYBERSECURITY
Learn about Allegion's commitment

Wireless Portable Reader Specifications	
Modulation/encryption	900 MHz spread spectrum, direct sequence, 10 channels AES-128 bit key
Frequency range	902-928 MHz
Credential verification time	< 1 second[1]
Communication range	Up to 200 ft with obstructions (normal building); up to 1000 ft clear line of sight
RF interference avoidance	Configurable dynamic channel switching
Data rate	40 kbps
Operating temperature	32°F (0°C) to 120°F (49°C)
Humidity	0% to 100% non-condensing
Battery type	8AA alkaline batteries
Battery life	Up to 2 years at 40,000 card reads or PIN codes per year
Dimensions (H x W x D, less reader)	3.375" x 5.0" x 6.25" (8.57 cm x 12.7 cm 15.88 cm)
Weight (less reader)	1.5 lb (0.68 kg)
Certifications	NEMA 1, 4, 4X, 6; FCC Part 15; Industry Canada (IC); RoHS
Additional accessories	Panel Interface Module (PIM400), SUS-A Cable used with SUS mobile app on compatible Android™ devices

Available through one of our GSA schedule 84 approved distributors

Included with WPR400

- AD Series credential reader module specified at ordering

Modes of operation

- Reader mode (default)
- Wireless test mode (field configurable)

Reliability

Secure and reliable wireless communication with the Panel Interface Module (PIM400) is accomplished using 900 MHz frequency. 900 MHz band enables longer transmission ranges because signal propagation with longer wavelengths travels a greater distance and better penetrates typical building construction – allowing for simplified system design.

Panel Interface Module (PIM400)

The PIM400 (sold separately) is required for communication between the WPR400/402 and the access control panel, and can support up to 16 AD-400 devices depending on your access control system.

Available AD Series Reader Modules[2]

Multi-Technology

- Proximity
- Smart

+ KEYPAD option

Si with HID Support

- Smart

+ KEYPAD option

Magnetic Stripe (insertion)

+ KEYPAD option

Magnetic Stripe (swipe)

+ KEYPAD option

Keypad

1. WPR requires less than 100 msec, response time does not include latency time of ACP.
2. Dummy trim reader module also available. Please see AD Series data sheets for more details on credential reader modules.

Allegion, the Allegion logo, Falcon, Schlage, the Schlage logo, and Von Duprin are trademarks of Allegion plc, its subsidiaries and/or affiliates in the United States and other countries. All other trademarks are the property of their respective owners.

© 2024 Allegion plc

004096, Rev. 01/24

WRI400

Wireless Reader Interface

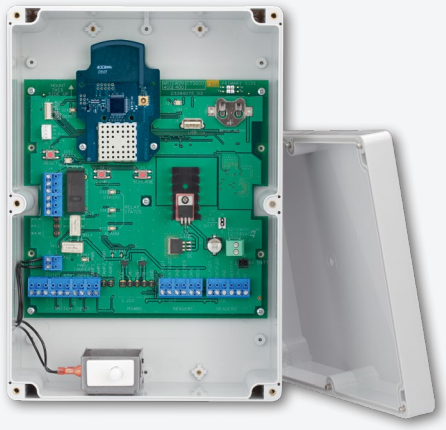

Overview

The WRI400 is a networked access point controller designed to provide wireless connectivity to traditional electronic access control components including credential readers, door position and request-to-exit switches.

The WRI400 Wireless Reader Interface provides local termination points for your wall or mullion mounted reader, door position switch, request-to-exit (RX) and reader tamper. The WRI400 communicates data via 900 MHz back to either a PIM400-485 or PIM400-TD2 which are hardwired to the Access Control Panel (ACP) where all access and specific reporting decisions are made and recorded.

The WRI400 is designed to be compatible with most of the popular Wiegand or Clock & Data format readers that exist in the market today. Utilizing the two form C relays on board expands the capability at the door to control electronic locking hardware as well as other devices such as automatic operators.

The WRI400 allows you to extend the reach of your access control system to openings that are hard to reach with network wiring. Ideal applications include remote doors, historic buildings, gates and elevators. Since the WRI400 is built on an open architecture platform it is designed for seamless integration with most access control systems.

Features & Benefits

- Visual LED indications – WRI400 cover is monitored by a tamper switch
- Encryption – Each RF transmission is encrypted with AES-128 bit keys
- Reader interfaces support:
  - Wiegand (data1/data0) up to 255 bits
  - Magnetic stripe (Clock & Data) up to 255 bits
- Form C relay outputs:
  - Strike relay
  - Auxiliary output relay
- Signal inputs:
  - Request-to-enter
  - Request-to-exit
  - Door position switch
  - Reader tamper 1
  - Reader tamper 2
- Certification: NEMA 1, 4, 4X, 6; UL 294, FCC Part 15; Industry Canada (IC), RoHS

Allegion, the Allegion logo, Schlage and the Schlage logo are trademarks of Allegion plc, its subsidiaries and/or affiliates in the United States and other countries. All other trademarks are the property of their respective owners.

CYBERSECURITY
Learn about Allegion's commitment

WRI400 Specifications		
Frequency range		902-928 MHz
Modulation		900 MHz spread spectrum, direct sequence, 10 channels
RF interference avoidance		Optional dynamic channel switching
Transmission/encryption		AES-128 bit key (optional)
Data rate		RF: 40 kbps
Credential verification time		< 1 second[1]
Communication range		Up to 200 ft (61 m) normal building construction Up to 1000 ft (305 m) clear line of sight (See ANT400-REM data sheet for increasing distance)
Power supply requirements		12 VDC or 24 VDC; 500 mA maximum current
Connector cable specifications	DC power input	18AWG, 2 conductor (Belden 8760 or equivalent) up to 1000 ft (305 m)
	Credential readers (x2)	Data signals: 22AWG, 6 conductor (Alpha 1296C or equivalent) up to 500 feet (152 meters) Reader tamper signals: 18AWG, twisted pair shielded (Beldon 8760 or equivalent) up to up to 500 feet (152 meters)
	Strike/aux relay outputs	18AWG, 2 conductor (Belden 8760 or equivalent) up to 2000 feet (610 meters)
	Request-to-enter and -exit inputs	18AWG, 2 conductor (Belden 8760 or equivalent) up to 2000 feet (610 meters)
Relay output tolerances	Strike output relay	Form C relay; 6 amps at 24 VDC or 6 amps at 120 VAC or 3 amps at 240 VAC
	Auxiliary output relay	Form C relay; 2 amps at 24 VDC or 0.5 amps at 120 VAC
Operating temperature		-31°F (-35°C) to 151°F (66°C)
Operating humidity		0 - 100% condensing
Dimensions (H x W x D)		10.43" x 7.28" x 3.79" (26.49 cm x 18.49 cm x 9.63 cm)
Certifications		NEMA 1, 4, 4X, 6; UL 294; FCC Part 15; Industry Canada (IC); RoHS

1. WRI requires less than 100 msec, response time does not include latency time of ACP.

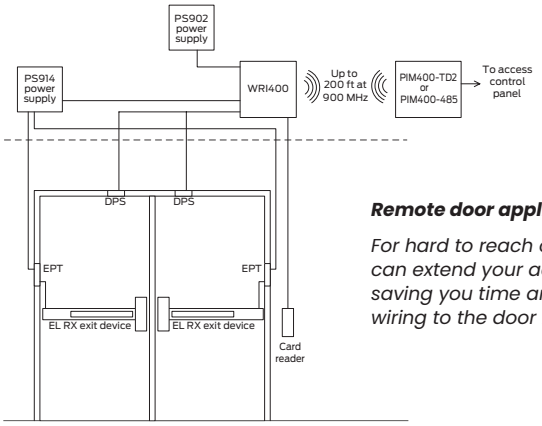

Remote door application

For hard to reach openings, the WRI400 can extend your access control system saving you time and money by reducing wiring to the door from the panel.

Additional Features

Reliable Communications

900 MHz band enables longer transmission ranges. In general, signal propagation with longer wavelengths travel a greater distance and penetrate through, and around objects better than signals with shorter wavelengths.

Online Communications (Heartbeat)

Regular communications between the WRI400 and PIM400 monitor transmission presence and integrity. Online communications enable the WRI400 to download information or instructions such as unlock and relock.

Optional Accessories

- **ANT400-REM-I/O** – Omni-directional remote indoor/outdoor antenna module. Requires available grounding kit (MGB+MCA5) for outdoor installations
- **ANT400-REM-I/O+6DB** – Directional, flat panel, remote indoor/outdoor antenna with 6DB of gain. Requires available grounding kit (MGB+MCA5) for outdoor installations
- **MGB+MCA5** – Grounding kit for outdoor installations
- **ANT400-REM-CEILING** – Omni-directional ceiling mount indoor remote antenna
- **ANT400-REM-HALL** – Bi-directional indoor hall application remote antenna
- **SUS-A Cable** – for use with SUS mobile app on compatible Android devices
- **593PI-12DC** – 12 VDC power supply

Note: Available through one of our GSA schedule 84 approved distributors.

© 2024 Allegion plc
004014, Rev. 01/24

GCK400 & ECK400

Wireless Gate Control Kits & Elevator Control Kits

Overview

The Gate Control Kit (GCK400) and the Elevator Control Kit (ECK400) complement and expand the AD Series platform by bringing wireless access control to applications that are difficult to reach with a traditional wired approach.

The GCK400 and the ECK400 are kits comprised of the Wireless Reader Interface (WRI400), the Panel Interface Module (PIM400-TD2), a Remote Antenna (ANT-REM I/O) and a power supply (593PI-12DC). The GCK400 kit also includes an antenna grounding kit (MGB+MCA5).

The Wireless Reader Interface (WRI400) is compatible with most popular Wiegand or Clock & Data format credential readers on the market today. The WRI400 communicates via 900MHz to the PIM400-TD2 within a range of up to 1000 feet with a clear line of sight. The PIM400-TD2 is hardwired to the access control panel where decisions are validated and recorded.

The GCK400 kit can eliminate the need for trenching in gate applications, driving a significant reduction of installation time and cost. The gate kit is ideal for parking lots, airports, military bases and garages. Roadways, parking lots and landscape are left intact since the need to run wires underground is eliminated.

The ECK400 eliminate the need for traveling cables to elevator applications simplifying installation. Access control can be applied to elevators at a much faster rate, reducing downtime and disruption within the facility.

Features & Benefits

- Real time access control
- Reduced installation time
- Eliminates trenching of communication lines
- Eliminates traveling cables in elevators
- Two paralleled reader inputs
- Supports all Wiegand (data1/data0) and magnetic stripe (clock/data) reader technologies

Allegion, the Allegion logo, Schlage and the Schlage logo are trademarks of Allegion plc, its subsidiaries and/or affiliates in the United States and other countries. All other trademarks are the property of their respective owners.

CYBERSECURITY
Learn about Allegion's commitment

GCK400/ECK400 Kit Contents		
Qty	**Part number**	
1	ANT400-REM-I/O	Omni-directional, flat panel, remote indoor/outdoor antenna with adjustable mount
1	WRI400	Wireless reader interface connects to a reader and transmits signal to PIM
1	PIM400-TD2	Panel interface module receives information through antenna and sends to access control provider panel for confirmation
1	593PI-12	Wall plug-in power supply converts 120v input to 12 VDC output supports WRI-400
1	MGB+MCA5 (GCK400 only)	Antenna grounding kit

PIM400-TD2 Specifications	
Transmission / encryption	AES - 128 bit (optional)
Communication range	Up to 200 ft (61 m) with obstructions
	Up to 1000 ft (305 m) clear line of sight
	Up to 2000 ft (609 m) line of sight with high gain antenna on PIM400
	Up to 4000 ft (1219 m) line of sight with high gain antennas on PIM400 and WRI400
Dimensions (H x W x D)	10.43" x 7.28" x 3.79' (26.49 cm x 18.49 cm x 9.63 cm)

WRI400 Specification	
Frequency range	902-928 MHz
Modulation	900 MHz spread spectrum, direct sequence, 10 channels
RF interference avoidance	Optional dynamic channel switching
Data rate	RF: 40 kbps
Power supply requirements	12 VDC or 24 VDC
Dimensions (H x W x D)	10.43" x 7.28" x 3.79" (26.49 cm x 18.49 cm x 9.63 cm)
Operating temperature	- 31°F (-35°C) to 151°F (66°C)
Strike output relay	Form C relay: 6 amps at 24 VDC or 6 amps at 120 VAC or 3 amps at 240 VAC
Auxillary output relay	Form C relay: 2 amps at 24 VDC or 0.5 amps at 120 VAC
Dimensions (overall)	8.7 in x 6.94 in x 4.5 in (220 mm x 176 mm x 140 mm)
Weight	4.2 oz (120 grams)

Hardware required:
- GCK400
- Schlage® reader
- UL294 12/24 VDC power supply
- ACP

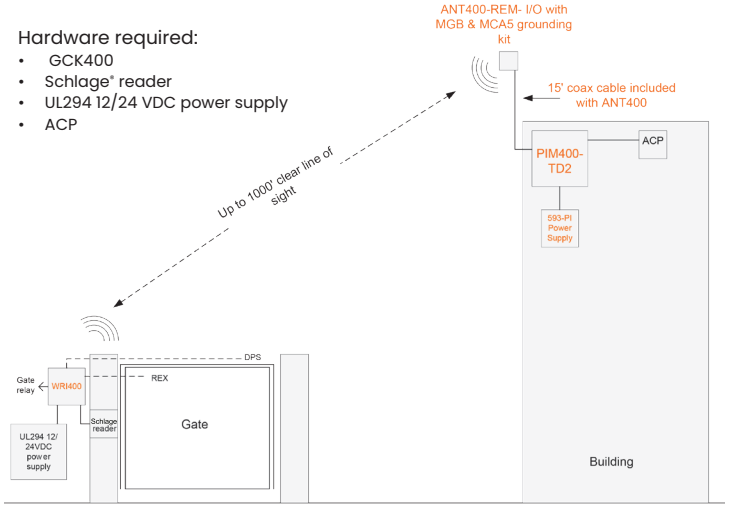

GCK includes WRI400, PIM400-TD2, ANT-REM I/O, MGB + MCA5 and 593-PI and are shown in blue. Items not included are in black. DPS and REX are optional.

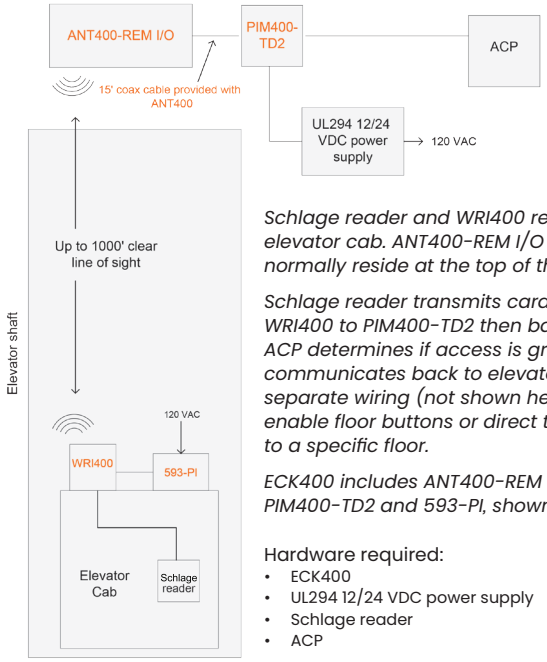

Schlage reader and WRI400 reside in or on the elevator cab. ANT400-REM I/O and PIM400-TD2 normally reside at the top of the elevator shaft.

Schlage reader transmits card data through WRI400 to PIM400-TD2 then back to ACP. ACP determines if access is granted and communicates back to elevator cab via separate wiring (not shown here) to either enable floor buttons or direct the elevator cab to a specific floor.

ECK400 includes ANT400-REM I/O, WRI400, PIM400-TD2 and 593-PI, shown in blue.

Hardware required:
- ECK400
- UL294 12/24 VDC power supply
- Schlage reader
- ACP

Ordering Information

- **GCK400** - Wireless Gate Control Kit
- **ECK400** - Wireless Elevator Control Kit

Optional Accessories

- **ANT400 Hall** - Bi-directional indoor antenna ceiling mount
- **ANT400–REM–I/O + 6 DB** - High gain, directional, flat panel remote indoor/outdoor antenna with 6 DB gain.
- **MGB + MCA5** - Antenna grounding kit for outdoor applications

Available through one of our GSA schedule 84 approved distributors

© 2024 Allegion plc
004013, Rev. 01/24

ANT400-REM

AD Series Remote Antennas for Wireless System

Note: Images not to scale

Overview

The Schlage ANT400-REM optional remote antennas are designed for use with the AD-400 Series devices. They increase installation flexibility of wireless products, extend the range of wireless communication in certain directions and expand the range of applications of AD Series solution.

A remote antenna is used to improve signal communication strength for wireless communications through an obstruction. A typical application would be when a remote device down a hallway requires a few extra feet of signal strength to reach the PIM400, which is sometimes located around a corner or behind a wire mesh or thick brick construction material.

When increased wireless communication range is required, the ANT400-REM-I/O+6dB model can up to double the range in the line of sight that it is aimed. This “gain antenna” increases the signal strength by focusing the energy in a single direction instead of broadcasting in all directions.

AD Series remote antennas are important components to environments with limited installation flexibility. The connected PIM400 can be up to 15 feet away from the remote antenna via the included coaxial cable. The outdoor rated antennas create new applications that allow a PIM400 to communicate to external remote access points such as gates or remote buildings without the need to trench cables.

Features & Benefits

- Use with PIM400 and WRI400
- Increase installation flexibility
- Optimize installation location
- Extend communication range with high-gain antenna
- Directional, bi-directional or omni-directional
- Indoor and outdoor options

Included in:

- ECK400 Wireless Elevator Kit
- GCK400 Wireless Gate Control Kit

Allegion, the Allegion logo, Schlage and the Schlage logo are trademarks of Allegion plc, its subsidiaries and/or affiliates in the United States and other countries. All other trademarks are the property of their respective owners.

CYBERSECURITY
Learn about Allegion’s commitment

Remote Antenna Models

Model			Description
ANT400-REM-I/O	Type	Quasi omni-directional, unity gain	**Intended use:** an omni-directional flat-panel antenna for use with indoor or outdoor applications. To be mounted vertically on a wall or post. **Included:** antenna, 15 ft coax cable, coax whip, articulated wall/post mounting bracket. Requires grounding kit (MGB+MCA5) for outdoor installations.
	Communication range extension	15 ft due to cable length	
	Location	Indoor/outdoor	
	Dimensions (HxWxD)	9.1" x 8.4" x 1.2"	
	Weight:	0.5 kg	
	Temperature range:	-40˚C to +65˚C (-40˚F to +150°F)	
ANT400-REM-I/O+ 6dB	Type	Directional, high gain	**Intended use:** a high gain, directional flat-panel antenna for use with indoor or outdoor applications. To be mounted vertically on a wall or post. **Included:** antenna, 15 ft coax cable, coax whip and articulated wall/post mounting bracket. Requires grounding kit (MGB+MCA5) for outdoor installations.
	Communication range extension	Up to 2x the original range without antenna (single direction), plus 15 ft due to cable length. Up to 200' in typical building construction or up to 2000' clear line of sight.	
	Location	Indoor/outdoor	
	Dimensions (HxWxD)	9.1" x 8.4" x 1.2"	
	Weight:	0.5 kg	
	Temperature range:	-40˚C to +65˚C (-40˚F to +150°F)	
ANT400-REM-CEILING	Type	Omni-directional, unity gain	**Intended use:** an omni-directional antenna for use with indoor applications. To be mounted horizontally on ceiling. **Included:** antenna, 15 ft coax cable, and coax whip.
	Communication range extension	15 ft due to cable length. Up to 200' in typical building construction or up to 1000' clear line of sight.	
	Location	Indoor/outdoor	
	Dimensions (HxWxD)	9.1" x 8.4" x 1.2"	
	Weight:	0.5 kg	
	Temperature range:	-40˚C to +65˚C (-40˚F to +150°F)	
ANT400-REM-HALL	Type	Bi-directional, unity gain	**Intended use:** an bi-directional antenna for use with indoor applications. To be mounted on wall or ceiling. **Included:** antenna, 15 ft coax cable, and coax whip.
	Communication range extension	15 ft due to cable length. Up to 200' in typical building construction or up to 1000' clear line of sight.	
	Location	Indoor	
	Dimensions (HxWxD)	7.2" x 3.9" x 4.9"	
	Weight:	0.24 kg	
	Temperature range:	-10˚C to + 65˚C (14˚ F to + 150˚ F)	

Available through one of our GSA schedule 84 approved distributors

Accessories

MGB+MCA5 grounding kit

- The National Electrical Code (NEC) requires that any outdoor antenna be properly grounded
- The Schlage remote antenna grounding kit is compatible with all models of remote antenna

Certification

FCC Part 15

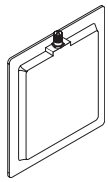

ANT400-REM-IO[1]
ANT400-REM-IO+6dB[1]

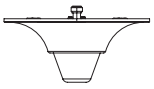

ANT400-REM-CEILING[1]

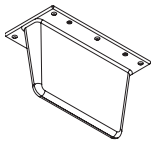

ANT400-REM-HALL[1]

1. These are the only remote antennas that have been approved by FCC for use with Allegion AD Series 900MHz communication modules. Any other antenna with an Allegion AD Series 900MHz communication modules would be in violation of FCC regulation.

© 2024 Allegion plc
004095, Rev. 01/24

RLBD

AD Series Dry Contact Relay Board

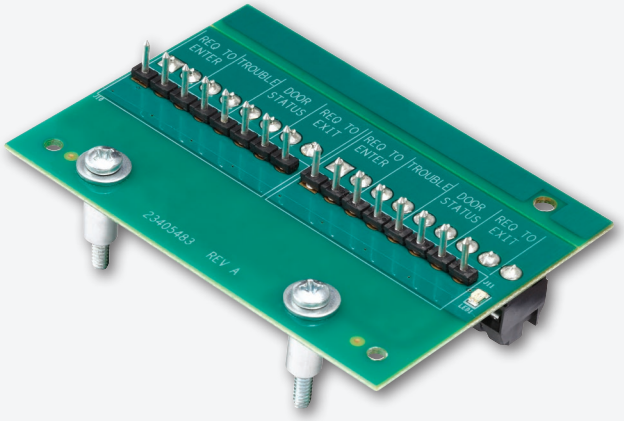

Overview

The Schlage AD Series Relay Board (RLBD) is an add on board used on the PIM400-TD2 and PIB300-2D for access control systems that require dry contact closures for supervised inputs.

The optional RLBD relay board removes the need for additional wired relays which can be cumbersome to source, complicated to install, and difficult to troubleshoot. The use of this board over custom wired solutions increases system reliability and reduces installation labor.

The RLBD is not required for integration of the PIM400-TD2 or the PIB3000-2D where the access control system can accept unsupervised inputs.

Features & Benefits

- Use with PIM400-TD2 or PIB300-2D
- Red LED light indicates power status
- Longer cycle lifetime than traditional mechanical-based relay solutions
- Access point status signals
  - Request-to-enter
  - Request-to-exit
  - Door position/status
  - Tamper switch

RLBD Specifications	
Voltage maximum (contact-to-contact)	28V
Maximum contact current	110 mA
“Open” state resistance	5 mega-ohms
“Closed” state resistance	2 ohms
Dimensions (H x W x D)	2.1" x 3.5" x 1.0" (5.33 cm x 8.89 cm x 2.54 cm)
Weight	0.125 lb (56.7 g)
Operating temperature	-31°F to 151°F (-35°C to 66°C)
Operating humidity	0-100% non-condensing

Available through one of our GSA schedule 84 approved distributors

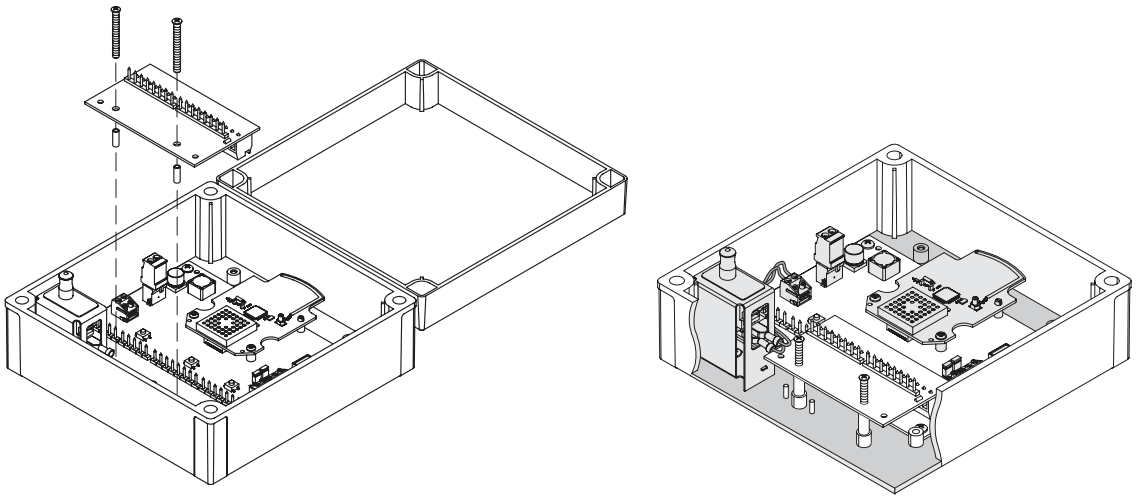

Installation of RLBD in a PIM400-TD2

Allegion, the Allegion logo, Schlage and the Schlage logo are trademarks of Allegion plc, its subsidiaries and/or affiliates in the United States and other countries. All other trademarks are the property of their respective owners.

© 2024 Allegion plc
004097, Rev. 01/24

REPTR400

Wireless Repeater Kit

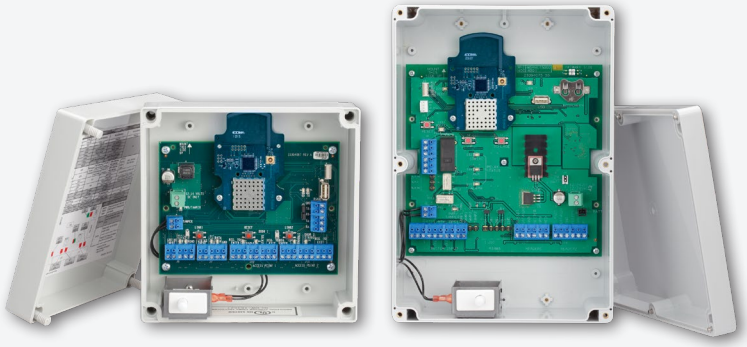

Overview

The Schlage REPTR400 Wireless Repeater Kit is a simple, all-in-one package solution for access control applications that require an extended wireless range. It can be used for indoor or outdoor applications enabling the integration and management of an opening too distant or difficult to reach via hard wires. Ideal applications include remote doors, historic buildings, gates and elevators.

The Schlage REPTR400 includes an AD Series Panel Interface Module (PIM400-TD2) and an AD Series Wireless Reader Interface (WRI400). The PIM400-TD2 interfaces with most access control systems. Its function is to wirelessly communicate with either an AD-400 Series wireless lock on the door or a separate WRI400 wired to other electronic components around the door. The PIM400-TD2 receives data via one radio channel and communicates it to the kit's WRI400 unit to be transmitted via another channel. The additional distances covered can be up to 900 ft. within a normally constructed building or up to 2500 ft. where there is direct line of site.

To extend range further for areas such as a remote gate or for use with a portable reader, a remote antenna (sold separately) can also be employed. If your distance needs suggest the use of an antenna, contact Allegion technical service for assistance.

Features & Benefits

- Convenient kit includes the WRI400 and PIM400-TD2
- Extends the reach of your access control system to remote locations without running wires
- Up to two REPTR400s can be added in a series (use only one for applications involving magnetic stripe credentials)

WRI400:

- 2 form C relay outputs – strike and auxiliary
- Each RF transmission is encrypted with AES-128 bit keys
- Reader interfaces support – Wiegand (data1/data 0) up to 255 bits and magnetic stripe (Clock & Data) up to 255 bits

PIM400-TD2:

- 900 MHz spread spectrum RF technology for long range, reliable communications
- Automatic linking to remote wireless access points with 10 channel frequencies to select from enables easy commissioning
- AES-128 bit encrypted spread spectrum transmissions

CYBERSECURITY
Learn about Allegion's commitment

PIM400-TD2 Specifications	
Frequency range	902-928 MHz
Modulation	900 MHz spread spectrum, direct sequence, 10 channels
Communication	Up to 200 ft (normal building construction); up to 1000 ft, clear line of sight
Operating temperature	-31°F (-35°C) to 151°F (66°C)
Humidity	0% to 100% condensing
Power supply	12 VDC or 24VDC
Dimensions (H x W x D)	7.1" x 7.1" x 3.0" (18.0 cm x 18.0 cm x 7.6 cm)
Weight	1.25 lb (.56 kg)
Certifications	NEMA 1, 4, 4X, 6; UL 294; FCC Part 15; RoHS; Industry Canada (IC)

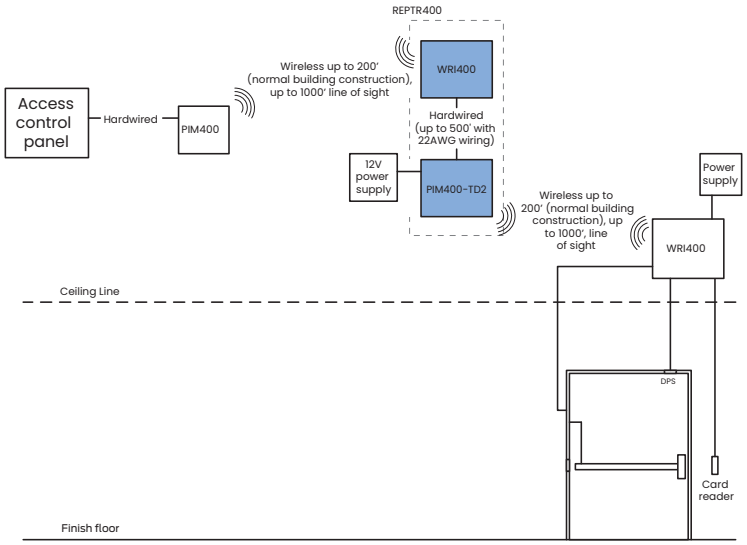

Note: There are many other applications that use different wireless access points; this is one example of how a REPTR400 can be used.

WRI400 Specifications		
Frequency range		902-928 MHz
Modulation		900 MHz spread spectrum, direct sequence, 10 channels
RF interference avoidance		Optional dynamic channel switching
Transmission/encryption		AES-128 bit key (optional)
Data rate		RF: 40 kbps
Credential verification time		< 1 second (WRI requires less than 100ms. Response time does not include latency time of ACP. Each REPTR400 Kit adds 250ms delay)
Communication range		Up to 200 ft (61 m), normal building construction Up to 1000 ft (305 m), clear line of sight (See ANT400-REM data sheet for increasing distance)
Power supply requirements		12 VDC or 24 VDC; 500 mA maximum current
Connector cable specifications	DC power input	18AWG, 2 conductor (Belden 8760 or equivalent), up to 1000 ft (305 m)
	Credential readers (x2)	Data signals: 22AWG, 6 conductor (Alpha 1296C or equivalent) up to 500 feet (152 meters) Reader tamper signals: 18AWG, twisted pair shielded (Belden 8760 or equivalent) up to 500 feet (152 meters)
	Strike/aux relay outputs	18AWG, 2 conductor (Belden 8760 or equivalent), up to 2000 feet (610 meters)
	Request-to-enter and -exit inputs	18AWG, 2 conductor (Belden 8760 or equivalent), up to 2000 feet (610 meters)
Relay output tolerances	Strike output relay	Form C relay; 6 amps at 24 VDC or 6 amps at 120 VAC or 3 amps at 240 VAC
	Auxiliary output relay	Form C relay; 2 amps at 24 VDC or 0.5 amps at 120 VAC
Operating temperature		-31°F (-35°C) to 151°F (66°C)
Operating humidity		0 - 100% condensing
Dimensions (H x W x D)		10.43" x 7.28" x 3.79" (26.49 cm x 18.49 cm x 9.63 cm)
Certifications		NEMA 1, 4, 4X, 6; UL 294; FCC Part 15; Industry Canada (IC); RoHS
Optional accessories		593P1-12 DC - power supply for Panel Interface Module (PIM)

Available through one of our GSA schedule 84 approved distributors.

Allegion, the Allegion logo, Schlage and the Schlage logo are trademarks of Allegion plc, its subsidiaries and/or affiliates in the United States and other countries. All other trademarks are the property of their respective owners.

© 2024 Allegion plc
004015, Rev. 01/24

Schlage Utility Software (SUS)

Utilizing the SUS-A Cable

Overview

The Schlage Utility Software (SUS) mobile app for Android™ devices is designed specifically for use with the SUS-A cable to set up and act as the link between access control software and select Schlage® electronic locks and accessories. This new SUS mobile app and cable replaces the legacy SUS and HHD solution.

The SUS and SUS-A cable are used with networked and offline locks to initialize and configure devices, test operational status, perform ongoing system maintenance and update device firmware.

In addition, for offline devices, the SUS solution is utilized to transfer access control data from the Schlage Express access control software (such as authorized user lists) via the mobile device and cable to the locks or accessories. SUS is also utilized to download audit trail information from locks to the mobile device and then transfer that data to Schlage Express for analysis and storage.

The intuitive screen layout of the free SUS mobile app provides easy navigation during use. The SUS-A cable is an all-in-one solution with separate connectors – USB-A for our USB enabled devices and a 2-pin serial connection for our serial enabled devices – to connect the mobile device to the locks.

Features & Benefits

- Intuitive, free SUS mobile app for Android™ devices
- Single cable for Schlage AD and CO Series locks and select legacy devices
- Facilitates initialization of locks and accessories
- Configures and tests devices
- Simplifies firmware updates
- Import/Export Device Configuration feature simplifies configuration process
- Ability to reclass Schlage AD Series locks
- Manager and Operator user modes

Features & Specifications	
Initialize lock and accessories	Yes
Field configure devices	• Credential reader formats • Lock function • Unlock period • Failure mode • Audible alarm on/off
Offline devices	• Manage up to 100 unique door files • Retrieve audit trails from up to 100 devices
Networked devices	• Communication settings • Validate status monitor
Service and diagnostics	• Battery status • Validate hardware and software revision • Troubleshooting status signals • Firmware upgrades

Device Compatibility

SUS mobile app and SUS-A cable are compatible with the following Schlage devices:

- AD-400/401/402, AD-300/301/302, AD-200/201/250 locks, AD Series readers
- CO-200/220/250 locks
- PIM400 (RSI and TD2), WPR400/401, PIB300, WRI400, CT5000 controller
- BE367/FE210 (SPED) locks

Firmware Requirements

- Device firmware needs to be at a minimum version to function correctly with the SUS mobile app and SUS-A cable
- Please reference the Support Products area here for more information

Android™ Mobile Device

Recommendations

- For optimum performance the SUS mobile app has been tested[1] with flagship Android devices from major manufacturers. Compatible phone models and recommended OS versions are available on the SUS web page.
- Mobile phones are not available for purchase from Allegion
- Cellular plan is not required
- Apple® devices are not compatible with the SUS and SUS-A cable solution

1 Compatibility with other phone models and operating systems may work, but are not officially supported at this time.

Ordering Information

- 47282796 SUS A-KIT– USB and 2-pin Android cable
- SUS mobile app for compatible Android devices is available at no charge in the Google Play™ store
  - Search for "Schlage Utility Software - SUS"

Allegion, the Allegion logo, Schlage and the Schlage logo are trademarks of Allegion plc, its subsidiaries and/or affiliates in the United States and other countries. All other trademarks are the property of their respective owners.

© 2024 Allegion plc
013622, Rev. 01/24

Schlage Express™

Offline Access Control Software

Overview

Schlage Express™ Offline Access Control Software provides a simple and effective means to manage access control within your facility. It supports Schlage offline locks including the CO-200, CO-220 and AD-200, as well as the CT5000 controller. Schlage Express is recommended for smaller facilities with basic access control needs.

It allows you to quickly enter or delete users and access points. It is compatible with a variety of credential options including PIN codes, iButtons, magnetic stripe, proximity and smart cards. For added security, dual authentication (card + PIN) is also supported.

Reporting capability is available to show audit trails retrieved, access privileges granted, and time functions established by either user or door.

Features & Benefits

- A variety of credential functions are supported including normal, toggle, one time and pass through
- Auto unlock schedules - allows weekly repeating for automatic locking and unlocking of doors (up to 16 defined per system; up to 8 assigned per lock)
- Supports magnetic stripe, proximity and smart cards
- Supported devices include CO-200, CO-220, AD-200, CM, KC-2, CT-1000, CT5000, FE210 and BE367
- Supports Windows 11, Windows 10, Windows XP, Windows 7 and Windows 8
- User times zones- limits the hours and days a user can access assigned points (Up to 8)
- Holidays - suspends normal operations for user defined periods per door during non-normal days (Up to 16)
- Users/audits and lock support
- 2,000 Users/audits and 50 locks/ devices
- 1,000 Users/audits and 100 locks/ devices
- Supports 12 button keypad with up to 6 digit PIN codes
- Duplicate PIN notification feature

Please note: Schlage Express Software is NOT supported on the Home and Starter Versions of the Windows Operating Systems.

Specifications	
Hardware	Intel Pentium II processor (Pentium III or IV recommended), CD-ROM, mouse or compatible pointing device, VGA or Super VGA monitor, keyboard
Hard disk space	250 MB for software; will require additional space for stored data
Memory	256 MB RAM minimum or the memory required for the operating system, whichever is greater
Operating system	Microsoft Windows 11, Windows 10, Windows XP, Windows 7 and Windows 8 Please note that Schlage Express Software is NOT supported on the Home and Starter Versions of the Windows Operating Systems.
Reports with the built-in viewer Internet Explorer 6 or higher must be installed	
Required for programming	For offline locking system programming, the following is required: • Available USB port on the PC • Schlage Utility Software (SUS) mobile app on compatible Android devices and SUS-A cable • Legacy Schlage Handheld Device (HHD) is also supported
	For offline legacy locking system programming done directly from the PC, the following is required: • Available USB port on the PC • Programming interface cables

Ordering Information

- **SXPR-SFT-1** - Schlage Express software only

Accessories

- **SUS-A Cable** – For use with SUS mobile app on compatible Android devices
- **P512112** - Computer interface module used in conjunction with HH-Serial cable for managing legacy Schlage offline locks
- **P101203** - Computer Interface module with ibutton reader used in conjunction with HH-Serial Cable for managing legacy Schlage offline locks
- **P394548** - Female/female serial cable. Used to connect computer interface module to laptop/PC
- **SDB9USBCBL** - Six inch cable adapter allows a serial port device to be used with a USB port device (for use with PS12112)
- **CRP2** - Proximity credential enrollment reader. Used to read proximity data for enrollment into Schlage Express 4.0 and higher
- **CRM2** - Magnetic stripe credential enrollment reader. Used to read magnetic stripe data for enrollment into Schlage Express 4.0 and higher

Allegion, the Allegion logo, Schlage and the Schlage logo are trademarks of Allegion plc, its subsidiaries and/or affiliates in the United States and other countries. All other trademarks are the property of their respective owners.

© 2024 Allegion plc
003940, Rev. 01/24

Schlage Express™

Offline Access Control Software Capability Matrix

	CO-200 & CO-220	AD-200
System capacity at lock		
Number of users or audits/locks	2,000 users/audits, 50 lock max.	2,000 users/audits, 50 lock max.
	1,000 users/audits, 100 lock max.	1,000 users/audits, 100 lock max.
Holidays	16	16
1st person in	Yes	Yes
Time zones	8	8
Auto unlocks	8	8
Reader		
Keypad only	Yes	Yes
Magnetic stripe	Yes	Yes
Proximity	Yes	Yes
Multi-technology - 125 kHz prox and 13.56 MHz smart card	No	Yes
Card + PIN	Yes (3 to 6)	Yes (3 to 6)
Status monitors		
Mechanical key override (ATK)	Yes	Yes
Battery status	Yes	Yes

Note: Shaded boxes indicate features that are only available in Express v4.0 or higher. Previous versions (Express 3.5.7 and older) support 1000 users/audits and 100 locks, and do not include AD Series and CO Series software labels.

	CO-200 & CO-220	AD-200
Lock functions		
Storeroom	CO-200 only	Yes
Office/toggle/classroom	CO-200 only	Yes
Privacy	CO-200 only	Yes
Apartment	CO-200 only	Yes
Classroom security	CO-200 only	No
Credential attributes		
Normal credential	Yes	Yes
Toggle credential	Yes	Yes
Pass thru credential	Yes	Yes
Visitor/one time use credential	Yes	Yes
Freeze credential	Yes	Yes
Lock down credential	No	No

Allegion, the Allegion logo, Schlage, and the Schlage logo are trademarks of Allegion plc, its subsidiaries and/or affiliates in the United States and other countries. All other trademarks are the property of their respective owners.

© 2024 Allegion plc
009396, Rev. 01/24

CO-100

Standalone Electronic Lock

Overview

The CO Series provides ideal solutions for customers seeking the added security and convenience of electronic access control without the cost or complexity of a fully networked system. Within this group is CO-100, a standalone lock that is manually programmable. User rights are stored on the lock with unique PIN codes assigned to each user. This minimizes the number of mechanical keys issued which protects the integrity of your key system. PIN codes can be easily added or deleted at anytime, right at the door.

The CO-100 from Schlage is versatile enough to use anywhere. In the classroom/storeroom function, it is rated full outdoor and can be used for gate or breezeway access. CO-100 privacy function locks can be programmed to show occupancy indication for applications such as dressing areas or bathrooms. And office/classroom function locks can be set up for remote release making them perfect for vestibules or waiting rooms.

Cylindrical, mortise, mortise deadbolt, and exit trim chassis options are available. The series is compatible with many popular brands of exit devices and offered in a wide variety of finishes and levers to suite with your existing hardware. Mechanical key override is standard and compatible with multiple cylinder types.

CO Series has been tested to the highest standards in the industry to ensure the quality and reliability you have come to expect from Schlage. The CO Series is ANSI/BHMA A156.25 (full outdoor[1]), ANSI/BHMA Grade 1 certified and UL 294 Listed.

Features & Benefits

- Manually programmable
- Up to 500 unique 3-6 digit PIN codes stored on the lock
- ANSI/BHMA A156.25 (full outdoor[1]), ANSI/BHMA Grade 1 certified, UL 294 and UL 10C listed, hurricane wind and impact rated[2]
- Storeroom, office/classroom and privacy functions available
- Chassis options include cylindrical, mortise, and exit trim
- Compatible with most major brands of key systems and exit devices
- Hard wired, remote release push button capability[3]
- Programmable option for lighted occupancy indication[4]
- Three levels of user authority
- Normal, toggle, pass through, and freeze credential attributes available
- LED indicator visually communicates lock status
- Fully outdoor rated in 70 function for use on pool gates and breezeways

1. Applies to 70 function only.
2. Applies to cylindrical and mortise chassis only.
3. Available on office function locks manufactured after 1/1/2018 with firmware version 2.6.2 or higher.
4. Available on privacy function locks manufactured after 9/30/2018 with firmware version 2.7.0 or higher.

Exterior

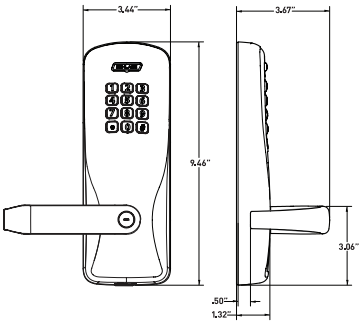

Interior

Cylindrical

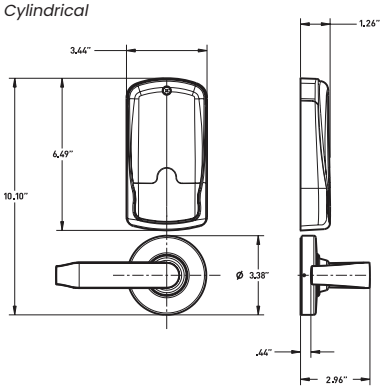

Mortise deadbolt

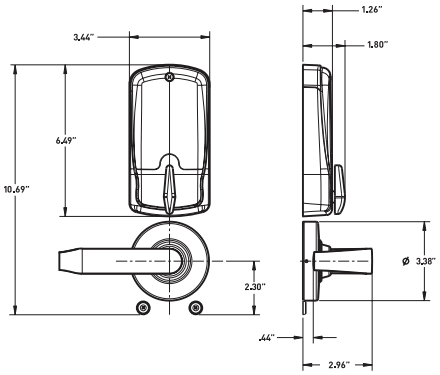

CO-100 Electronic Lock Specifications	
Users	500
Credential verification time (keypad only)	≤ 1 second
Visual/audible communications	Tri-colored LED's and audible indicators
Power supply	4 AA batteries (standard off the shelf: included)
Battery life	Up to 2 yrs with 4 AA batteries
Operating temperature	Exterior: -31° to 151°F (-35° to 66°C) Interior: -31° to 151°F (-35° to 66°C)
Operating humidity	0 - 100% non-condensing
Certifications	ANSI/BHMA A156.25 (full outdoor[1]); ANSI/BHMA Grade 1; UL 294; ULC S319; UL 10C 3 hour; FCC Part 15; Industry Canada (IC); ADA compliant Cylindrical and mortise chassis only: TDI DR-464, DR-465; FL12400, FL4613, FL1592, FL13013, FL14482 Mortise chassis only: FL3905

Functions

- Storeroom
- Office/classroom
- Privacy

Standard Status Signals

- Battery status - indicated by flashing LED lights
- Access granted/access denied
- Programming commands
- Occupied - indicated by red LED light (privacy function only)

1. Applies to 70 function only.

Mechanical Specifications			
Chassis	**Cylindrical**	**Mortise**	**Exit trim**
Handing	Handed to order, field reversible		
ANSI standard (Meets or exceeds)	A156.25 A156.2 Series 4000 Grade 1	A156.25 A156.13 Series 1000 Grade 1	A156.25 A156.3
Door thickness	1-3/4" standard, 1-3/8" to 2-3/4" optional (available in 1/8" increments)		
Backset	Standard: 2-3/4" Optional: 2-3/8", 3-3/4", 5"	2-3/4" only	Defined by exit device
Latch bolt	Standard: 1/2" throw Optional: 3/4" throw	Standard: 3/4" throw	Provided by exit device
Levers	Pressure cast zinc, plated		
Strike	Standard: 1-3/16" lip, ANSI, 1-1/4" x 4-7/8" Optional: Additional configurations available please see price book		Provided by exit device
Cylinder and keys	Schlage 6-pin Everest 29 S123 keyway Conventional cylinder with two patented keys standard. Additional options available including SFIC, FSIC and competitor brands. See Lever & Cylinder Compatibility Data Sheet		
Exit device compatibility	See CO Series Exit Trim Compatibility Data Sheet		

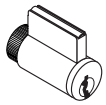

Conventional cylinder

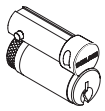

Full Size Interchangeable Core

Small Format Interchangeable Core

Programming and Use Options		
Function code	**User level**	**Description**
PIN[1]	Basic	Unlocks the lock momentarily when in a normally secured state.
Programming	Manager/administrator	Initiates all programming actions (can be changed by administrator)
User changes	Manager/administrator	Assigns or deletes user PINs for the lock
Toggle	Manager/administrator	Changes the lock to an unlocked state and back when desired
Freeze	Administrator	Maintains the lock in current state until code is re-entered (cannot be toggled)
Pass through	Administrator	Unlocks the lock momentarily regardless of current state
Other	Administrator	Includes change relock delay period; change PIN length; disable/enable beeper; disable/enable remote release[2]; disable/enable LED occupancy indication[3]

1. Credentials can be 3-6 digits in length.
2. Remote release feature available on office function only.
3. Occupancy indication feature available on privacy function only.

Ordering Information

Available through one of our GSA schedule 84 approved distributions.

Required fields								Factory defaults and options				
CO	100	CY	70	KP	SPA	626	P6	S123	RH	13-247	10-025	134
Series	Class	Chassis	Function	Reader	Lever Style	Finish	Key Cylinder	Keyway	Handing	Backset & Latch or Armored Front	Strike	Door Thickness
1	2	3	4	5	6	7	8	9	10	11	12	13

Standard options are indicated with a dot. See price book for specific configuration options.

3 Chassis	
CY	Cylindrical
MS	Mortise
993R	Exit trim – Rim/CVC/CVR
993S	Exit trim – SVR
993M	Exit trim – mortise
993DT	Dummy exit trim

4 Function	
40	Privacy
50	Office/classroom
70	Storeroom

5 Reader	
• KP	Keypad

6 Lever	
ATH	Athens
BRK	Boardwalk
BRW	Broadway
LAT	Latitude
LON	Longitude
RHO	Rhodes
SPA	Sparta
TLR	Tubular

Available with tactile warning options.

7 Finish	
605	Bright Brass
606	Satin Brass
612	Satin Bronze
619	Satin Nickel
625	Bright Chrome
• 626	Satin Chrome
626AM	Satin Chrome Antimicrobial
643e	Aged Bronze

8 Key Cylinder	
• P6	Schlage 6-pin conventional key-in-lever cylinder

See price book for other SFIC, FSIC and less cylinder options available. Compatible with Schlage®, Sargent®, Corbin Russwin, Medeco® and Yale®.

9 Keyway	
• S123	Everest 29

See price book for other available keyway options including restricted keyways in Primus XP high security cylinders and master keying.

10 Handing	
• RH	Right handed
RHR	Right handed reverse
LH	Left handed
LHR	Left handed reverse

Field reversible.

11 Backset & Latch or Armored Front	
• 13-247	Cylindrical: 2-3/4" backset deadlatch, square corner, 1-1/8" x 2-1/4"
• 09-663	Mortise: Armor front, 1-1/4" wide, square corner

12 Strike	
• 10-025	Cylindrical: 1-3/16" lip, ANSI, no box, 1-1/4" x 4-7/8"
• 10-072	Mortise: 1-3/16" lip, 1-1/4" x 4-7/8" square corner, box

See price book for other available strikes.

13 Door Thickness	
• 134	1-3/4"

Other thicknesses available between 1-3/8" and 2-3/4" See price book for details.

Lever Styles

Conventional cylinders shown, SFIC and FSIC also available.

Athens

Boardwalk

Broadway

Latitude

Longitude

Rhodes

Sparta

Tubular

Finishes

605
Bright Brass

606
Satin Brass

612
Satin Bronze

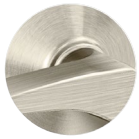
619
Satin Nickel

625
Bright Chrome

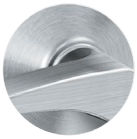
626
Satin Chrome

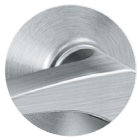
626AM
Satin Chrome Antimicrobial

643e
Aged Bronze

Allegion, the Allegion logo, Schlage, the Schlage logo and Falcon are trademarks of Allegion plc, its subsidiaries and/or affiliates in the United States and other countries. All other trademarks are the property of their respective owners.

© 2024 Allegion plc

004186, Rev. 01/24

CO-200

Standalone Electronic Lock

Overview

The CO Series is the ideal solution for customers seeking the added security and convenience of electronic access control without the cost or complexity of a fully networked system.

The CO-200 is computer or manually programmable with users rights stored on the lock. The Schlage Utility Software (SUS) mobile app on compatible Android devices is used in conjunction with your access control software and allows you to easily add or delete users and retrieve audits.

By issuing electronic credentials you can minimize the number of mechanical keys issued which protects the integrity of your key system. A variety of credential readers are also available, including keypad only, proximity, or proximity with keypad for dual authentication.

Cylindrical, mortise, mortise deadbolt, and exit trim chassis options are available as well as a wide variety of finishes and levers to suite with your existing hardware.

Mechanical key override is standard and compatible with multiple cylinder types. The CO Series is also compatible with many popular brands and types of exit devices.

The CO Series has been tested the highest standards in the industry to ensure quality and reliability you have come to expect from Schlage. The CO Series is ANSI/BHMA A156.25, ANSI/BHMA Grade 1 certified and UL 294 Listed.

Features & Benefits

- Computer programmable with audit trail
- Up to 2,000 users and up to 2,000 audits[1]
- Up to 32 holidays and 16 time zones[1]
- User rights stored on the lock
- The ability to add and delete users at the lock
- Available in cylindrical, mortise, mortise deadbolt, and exit trim
- Compatible with major brands of key systems and exit devices
- Classroom/storeroom, office, and privacy functions available
- Programmable option for lighted occupancy indication[2]
- LED indicator visually communicates lock status

1. Depending on access control software.
2. Available on privacy function locks manufactured after February 2019 with firmware version CO.A.30 or higher.

Exterior

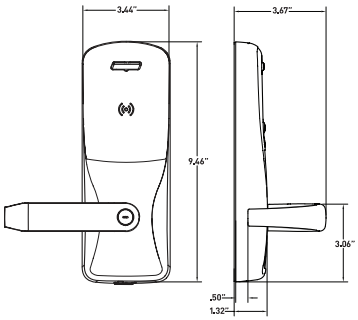

Interior

Cylindrical

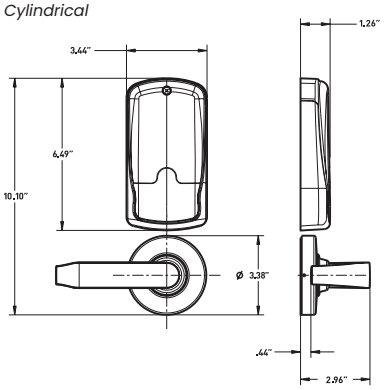

Mortise deadbolt

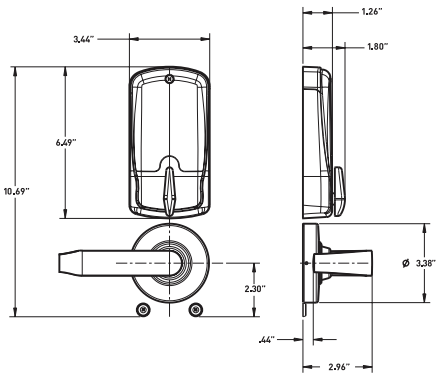

CO-200 Electronic Lock Specifications	
Users	Up to 2,000[1]
Audits	Up to 2,000[1]
Credential verification time	≤ 1 second
Visual/audible communications	Tri-colored LED's and audible indicators
Power supply	4 AA batteries (standard off the shelf: included)
Voltage range	4 VDC to 7 VDC
Battery life	Up to 2 yrs with 4 AA batteries
Operating temperature	Exterior: -31° to 151°F (-35° to 66°C) Interior: 32° to 120°F (0° to 49°C) due to batteries
Operating humidity	0 - 100% non-condensing
Certifications	ANSI/BHMA A156.25; ANSI/BHMA Grade 1; UL 294; ULC S319; UL 10C 3 hour; FCC Part 15; Industry Canada (IC); ADA compliant **Cylindrical and mortise chassis only:** TDI DR-464, DR-465; FL12400, FL4613, FL1592, FL13013, FL14482 **Mortise chassis only:** FL3905

Functions

- Storeroom[2]
- Office/classroom[2]
- Privacy[3]

Standard Status Signals

- Mechanical key override
- Battery status - indicated by flashing LED lights
- Access granted/access denied
- Programming commands
- Occupied - indicated by red LED light (privacy function only)

Schlage Utility Software

The Schlage Utility Software (SUS) mobile app on compatible Android mobile devices and SUS-A cable provides an easy way to manage people, audits and locks for simple access control management.

Schlage Utility Software

- Initialize lock and accessories
- Field configure devices
  - Credential reader formats
  - Lock function
  - Unlock period
  - Failure mode
  - Audible alarm on/off
- Service and diagnostics
  - Battery status
  - Validate hardware and software revision
  - Troubleshooting status signals
  - Firmware upgrades
- New device template simplifies configuration

1. Depending on access control software.
2. Storeroom and office/classrom function not available with mortise deadbolt option. To ensure safety, all functions always allow for free egress.
3. Door position switch is required for cylindrical and mortise chassis with privacy function.

Mechanical Specifications			
Chassis	**Cylindrical**	**Mortise**	**Exit trim**
Handing	Handed to order, field reversible		
ANSI standard (Meets or exceeds)	A156.25 A156.2 Series 4000 Grade 1	A156.25 A156.13 Series 1000 Grade 1	A156.25 A156.3
Door thickness	1-3/4" standard, 1-3/8" to 2-3/4" optional (available in 1/8" increments)		
Backset	Standard: 2-3/4" Optional: 2-3/8", 3-3/4", 5"	2-3/4" only	Defined by exit device
Latch bolt	Standard: 1/2" throw Optional: 3/4" throw	Standard: 3/4" throw Optional: 1" throw on mortise deadbolt	Provided by exit device
Levers	Pressure cast zinc, plated		
Strike	Standard: 1-3/16" lip, ANSI, 1-1/4" x 4-7/8" Optional: Additional configurations available please see price book		Provided by exit device
Cylinder and keys	Schlage 6-pin Everest 29 S123 keyway Conventional cylinder with two patented keys standard. Additional options available including SFIC, FSIC and competitor brands. See Lever & Cylinder Compatibility Data Sheet		
Exit device compatibility	See CO Series Exit Trim Compatibility Data Sheet		

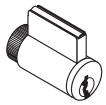

Conventional cylinder

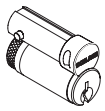

Full Size Interchangeable Core

Small Format Interchangeable Core

Reader Specifications		
	Keypad	**Proximity**
Frequency standards	N/A	125 kHz
Maximum read range	N/A	up to 1.25"
Compatibility	3-6 digit pin code	Schlage, ISONAS®, HID[1], GE/CASI ProxLite™ and AWID®
Compatible Schlage credentials	N/A	125 kHz clamshell, ISO card, ISO card with magnetic stripe, keyfob, and PVC disc (7000 Series)
Style/layout	12-button, 3x4 matrix	Option for 12-button, 3x4 matrix

1. Proximity bit lengths greater than 37 not supported.

Available CO-200 Reader Options

Keypad

Proximity
+ KEYPAD

Proximity

Ordering Information

Available through one of our GSA schedule 84 approved distributions.

Required fields								Factory defaults and options				
CO	200	CY	70	PR	SPA	626	P6	S123	RH	13-247	10-025	134
Series	Class	Chassis	Function	Reader	Lever Style	Finish	Key Cylinder	Keyway	Handing	Backset & Latch or Armored Front	Strike	Door Thickness
1	2	3	4	5	6	7	8	9	10	11	12	13

Standard options are indicated with a dot. See price book for specific configuration options.

3 Chassis	
CY	Cylindrical
MS	Mortise
MD	Mortise deadbolt
993R	Exit trim – Rim/CVC/CVR
993S	Exit trim – SVR
993M	Exit trim – mortise
993DT	Dummy exit trim

4 Function	
40	Privacy
50	Office/classroom
70	Storeroom

5 Reader	
• KP	Keypad
PR	Proximity
PRK	Proximity + keypad

6 Lever	
ATH	Athens
BRK	Boardwalk
BRW	Broadway
LAT	Latitude
LON	Longitude
RHO	Rhodes
SPA	Sparta
TLR	Tubular

Available with tactile warning options.

7 Finish	
605	Bright Brass
606	Satin Brass
612	Satin Bronze
619	Satin Nickel
625	Bright Chrome
• 626	Satin Chrome
626AM	Satin Chrome Antimicrobial
643e	Aged Bronze

8 Key Cylinder	
• P6	Schlage 6-pin conventional key-in-lever cylinder

See price book for other SFIC, FSIC and less cylinder options available. Compatible with Schlage®, Sargent®, Corbin Russwin, Medeco® and Yale®.

9 Keyway	
• S123	Everest 29

See price book for other available keyway options including restricted keyways in Primus XP high security cylinders and master keying.

10 Handing	
• RH	Right handed
RHR	Right handed reverse
LH	Left handed
LHR	Left handed reverse

Field reversible.

11 Backset & Latch or Armored Front	
• 13-247	Cylindrical: 2-3/4" backset deadlatch, square corner, 1-1/8" x 2-1/4"
• 09-663	Mortise: Armor front, 1-1/4" wide, square corner

See price book for mortise deadbolt and other backset and latch options or armor front options.

12 Strike	
• 10-025	Cylindrical: 1-3/16" lip, ANSI, no box, 1-1/4" x 4-7/8"
• 10-072	Mortise: 1-3/16" lip, 1-1/4" x 4-7/8" square corner, box

See price book for other available strikes.

13 Door Thickness	
• 134	1-3/4"

Other thicknesses available between 1-3/8" and 2-3/4" See price book for details.

Lever Styles

Conventional cylinders shown, SFIC and FSIC also available.

Athens

Boardwalk

Broadway

Latitude

Longitude

Rhodes

Sparta

Tubular

Finishes

605
Bright Brass

606
Satin Brass

612
Satin Bronze

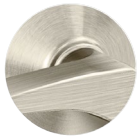
619
Satin Nickel

625
Bright Chrome

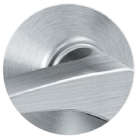
626
Satin Chrome

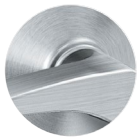
626AM
Satin Chrome Antimicrobial

643e
Aged Bronze

Allegion, the Allegion logo, Schlage, the Schlage logo and Falcon are trademarks of Allegion plc, its subsidiaries and/or affiliates in the United States and other countries. All other trademarks are the property of their respective owners.

© 2024 Allegion plc
004185, Rev. 10/24

CO Series

Exit Trim Compatibility

Overview

The CO Series offers 993 exit trim for use with compatible exit devices in retrofit or new construction applications. The 993 exit trim was designed to suite with CO Series cylindrical and mortise locksets to ensure that the facility remains aesthetically consistent. The CO Series 993 Exit Trim utilizes universal hardware to simplify installation of offline trim to a variety of exit devices, including rim style from Von Duprin, Falcon, Sargent®, Precision™, Corbin Russwin®, Dorma® and Yale® .

Available Exit Trim Styles:

- 993R – Rim, concealed vertical rod or concealed vertical cable (CVR/CVC for metal doors only)
- 993S – Surface vertical rod
- 993M – Mortise
- 993DT – Non-functioning dummy trim for exit

Exit Device Compatibility

Devices	CO-100/CO-200
Von Duprin 78 Rim/SVR/CVR[3]	●
Von Duprin 98/99 and 98/99XP Rim/SVR/CVR[3]/CVC[3]/mortise	●
Von Duprin 22/22F Rim/SVR	●
Falcon 25 Rim	●
Sargent® 80[4] Rim	●
Precision™ 21 Rim (2100 converts to 21 with Precision's BP21 kit)	●
Yale® 7000 Rim	●
Corbin Russwin® 5000 Rim	●
Dorma® 9300 Rim	●

1. Excluding dummy trim devices (993DT).
2. UL 294 does not apply to dummy trim devices (993DT).
3. Metal door only.
4. Narrow design and reversible Rim exits not compatible.

Features & Benefits

- Multiple credential reader options
- A wide variety of finishes and lever styles
- Powered by 4 AA batteries[1]
- Compatible with all Schlage Conventional, FSIC and SFIC formatted cylinders including many competitive OEM cylinders such as Sargent®, Corbin Russwin®, Medeco® and Yale®
- UL 294 Listed, ANSI/BHMA A156.25, ANSI/BHMA Grade 1 certified[2]

Compatibility		
Reader options	**CO-100**	**CO-200**
KP keypad	●	●
PR proximity		●
PRK proximity + keypad		●

Programming Options		
Reader options	**CO-100**	**CO-200**
Computer		●
Manual	●	●

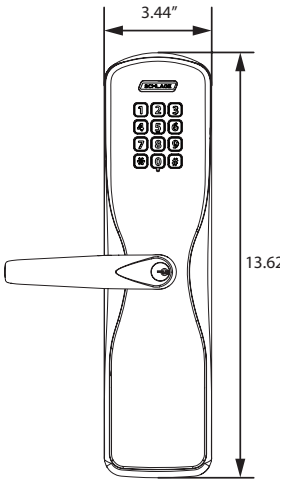

Exterior view
CO Series - 993 Exit Trim

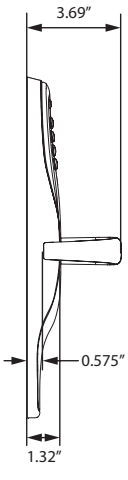

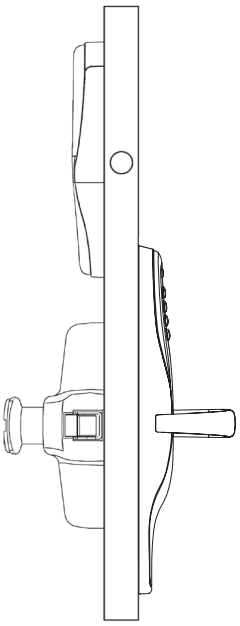

Profile view

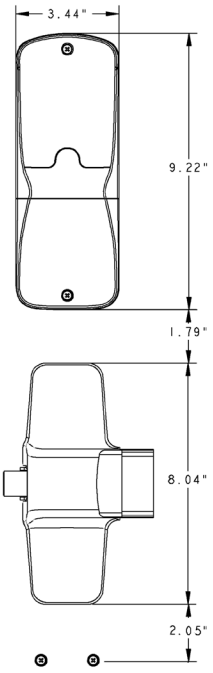

Interior view
CO-100/200 - all styles

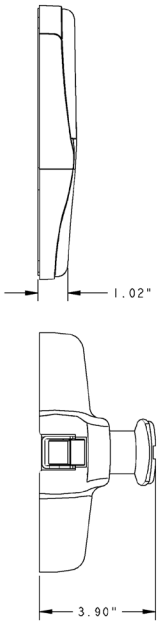

Side view
CO-100/200 - Rim/ CVR/CVC or mortise

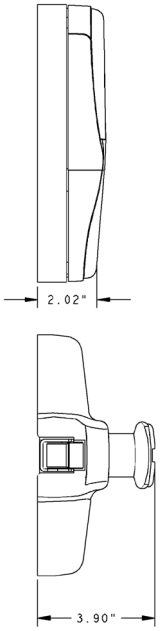

Side view
CO-100/200 SVR

Note: (2) #7 fasteners with decorative washers located 11.88" below bottom edge of lock.

Allegion, the Allegion logo, Falcon, Schlage, the Schlage logo and Von Duprin are trademarks of Allegion plc, its subsidiaries and/or affiliates in the United States and other countries. All other trademarks are the property of their respective owners.

© 2024 Allegion plc
004183, Rev. 10/24

AD Series & CO Series

Lever & Cylinder Compatibility

Overview

AD Series and CO Series electronic locks come standard with the Schlage® 6-pin Everest 29™ S123 keyway and two patented keys. The Everest 29 keyway's patentprotected undercut design with protection through 2029 is available in open and restricted keyway families. Patented restricted keyways, such as the Everest 29 R and T families, deliver a higher level of security by requiring authorization to access key blanks for duplication. Improve both administrative and physical security with the application of Primus XP cylinders and gain the option to also employ high-security UL 437 cylinders. The Everest 29 design enables a key blank that is backwards compatible to legacy Everest keyways allowing Everest 29 keys to work with existing Everest systems aiding the key system migration process.

The AD Series and CO Series can also be ordered with other popular Schlage keyways or prepared to receive Falcon® Conventional key-in-lever cylinders or Small Format Interchangeable Core (SFIC) cylinders. Less cylinder options are available to provide compatibility with Conventional, LFIC or SFIC cylinders of other manufacturers including, Sargent,® Corbin Russwin,® Medeco® and Yale.®

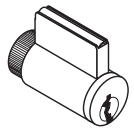

Conventional key-in-lever

P, P6, Z, L, L-SAR, L-FA7

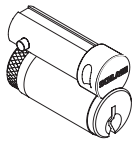

Full Size Interchangeable Core

R, M, J-SAR, J-CO6, J-CO7, J-MED, J-YA6, J-YA7

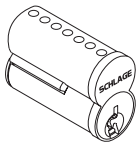

Small Format Interchangeable Core

G7, B

Features & Benefits

- The key-in-lever design of AD and CO Series fits a full range of Schlage cylinders featuring administrative security options from open to patented and patented restricted keyways
- Primus cylinder and key options provide enhanced physical security in the cylinder including a UL 437 listed high-security option and a patent protected key design with geographic exclusivity
- Levers are offered in a wide variety of finishes and styles
- Compatible with all Schlage Conventional, FSIC, SL (as Conventional and FSIC), and SFIC formatted cylinders including many competitive OEM cylinders
- SL cylinder option allows an Everest 29 R or legacy Everest B keyway facility to gain a Primus program level security
- AD and CO 993 exit trim is compatible with a variety of exit devices including rim style from Von Duprin, Falcon, Sargent,® Precision,™ Corbin Russwin,® Dorma® and Yale.®

Lever & Cylinder Compatibility

				Cylinder type			Lever style							
Ordering suffix	**Application (made to accept)**	**With cylinder**	**Pins**	**KIL**	**FSIC**	**SFIC**	**ATH**	**BRK**	**BRW**	**LAT**	**LON**	**RHO**	**SPA**	**TLR**
P	Schlage® - (6-pin, keyed 5)	●	6	●			●	●	●	●	●	●	●	●
P6	Schlage - Everest 29 S (default)	●	6	●			●	●	●	●	●	●	●	●
Z	Schlage SL - Everest 29 R keyways	●	7	●			●	●	●	●	●	●	●	●
L	Schlage, Falcon®		6	●			●	●	●	●	●	●	●	●
R	Schlage - Everest 29 S (default)	●	6		●		●	●	●	●	●	●	●	●
M	Schlage SL - Everest 29 R keyways	●	7		●		●	●	●	●	●	●	●	●
J	Schlage		6		●		●	●	●	●	●	●	●	●
G7	Schlage Everest 29 R keyways	●	7			●	●	●	●	●	●	●	●	●
B	Schlage, Falcon, Competitive OEM's		7			●	●	●	●	●	●	●	●	●
L-FA7	Falcon		7	●				●	●	●	●	●	●	
L-SAR	Sargent® (10L+11L)		6	●			●	●	●	●	●	●	●	●
J-SAR	Sargent 6300		6		●		●	●	●	●	●	●	●	●
J-CO6	Corbin® 8000		6		●		●	●	●	●	●	●	●	●
J-CO7	Corbin 8000-7		7		●			●	●	●	●	●	●	●
J-MED	Medeco® 32*0201		6		●			●	●	●	●	●	●	
J-YA6	Yale® 1210 or Medeco 31*0100		6		●		●	●	●	●	●	●	●	●
J-YA7	Yale 1220		7		●			●	●	●	●	●	●	

Lever Styles

Conventional cylinders shown, SFIC and FSIC also available.

Athens

Boardwalk

Broadway

Latitude

Longitude

Rhodes

Sparta

Tubular

Finishes

605
Bright Brass

606
Satin Brass

612
Satin Bronze

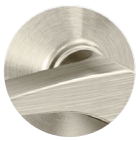
619
Satin Nickel

625
Bright Chrome

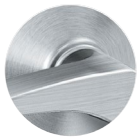
626
Satin Chrome

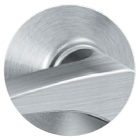
626AM
Satin Chrome Antimicrobial

643e
Aged Bronze

Allegion, the Allegion logo, Schlage and the Schlage logo are trademarks of Allegion plc, its subsidiaries and/or affiliates in the United States and other countries. All other trademarks are the property of their respective owners.

© 2024 Allegion plc
010432, Rev. 01/24

Schlage Utility Software (SUS)

Utilizing the SUS-A Cable

Overview

The Schlage Utility Software (SUS) mobile app for Android™ devices is designed specifically for use with the SUS-A cable to set up and act as the link between access control software and select Schlage® electronic locks and accessories. This new SUS mobile app and cable replaces the legacy SUS and HHD solution.

The SUS and SUS-A cable are used with networked and offline locks to initialize and configure devices, test operational status, perform ongoing system maintenance and update device firmware.

In addition, for offline devices, the SUS solution is utilized to transfer access control data from the Schlage Express access control software (such as authorized user lists) via the mobile device and cable to the locks or accessories. SUS is also utilized to download audit trail information from locks to the mobile device and then transfer that data to Schlage Express for analysis and storage.

The intuitive screen layout of the free SUS mobile app provides easy navigation during use. The SUS-A cable is an all-in-one solution with separate connectors – USB-A for our USB enabled devices and a 2-pin serial connection for our serial enabled devices – to connect the mobile device to the locks.

Features & Benefits

- Intuitive, free SUS mobile app for Android™ devices
- Single cable for Schlage AD and CO Series locks and select legacy devices
- Facilitates initialization of locks and accessories
- Configures and tests devices
- Simplifies firmware updates
- Import/Export Device Configuration feature simplifies configuration process
- Ability to reclass Schlage AD Series locks
- Manager and Operator user modes

Features & Specifications	
Initialize lock and accessories	Yes
Field configure devices	• Credential reader formats • Lock function • Unlock period • Failure mode • Audible alarm on/off
Offline devices	• Manage up to 100 unique door files • Retrieve audit trails from up to 100 devices
Networked devices	• Communication settings • Validate status monitor
Service and diagnostics	• Battery status • Validate hardware and software revision • Troubleshooting status signals • Firmware upgrades

Device Compatibility

SUS mobile app and SUS-A cable are compatible with the following Schlage devices:

- AD-400/401/402, AD-300/301/302, AD-200/201/250 locks, AD Series readers
- CO-200/220/250 locks
- PIM400 (RSI and TD2), WPR400/401, PIB300, WRI400, CT5000 controller
- BE367/FE210 (SPED) locks

Firmware Requirements

- Device firmware needs to be at a minimum version to function correctly with the SUS mobile app and SUS-A cable
- Please reference the Support Products area here for more information

Android™ Mobile Device

Recommendations

- For optimum performance the SUS mobile app has been tested[1] with flagship Android devices from major manufacturers. Compatible phone models and recommended OS versions are available on the SUS web page.
- Mobile phones are not available for purchase from Allegion
- Cellular plan is not required
- Apple® devices are not compatible with the SUS and SUS-A cable solution

1 Compatibility with other phone models and operating systems may work, but are not officially supported at this time.

Ordering Information

- 47282796 SUS A-KIT– USB and 2-pin Android cable
- SUS mobile app for compatible Android devices is available at no charge in the Google Play™ store
  - Search for "Schlage Utility Software - SUS"

Allegion, the Allegion logo, Schlage and the Schlage logo are trademarks of Allegion plc, its subsidiaries and/or affiliates in the United States and other countries. All other trademarks are the property of their respective owners.

© 2024 Allegion plc
013622, Rev. 01/24

Schlage Express™

Offline Access Control Software

Overview

Schlage Express™ Offline Access Control Software provides a simple and effective means to manage access control within your facility. It supports Schlage offline locks including the CO-200, CO-220 and AD-200, as well as the CT5000 controller. Schlage Express is recommended for smaller facilities with basic access control needs.

It allows you to quickly enter or delete users and access points. It is compatible with a variety of credential options including PIN codes, iButtons, magnetic stripe, proximity and smart cards. For added security, dual authentication (card + PIN) is also supported.

Reporting capability is available to show audit trails retrieved, access privileges granted, and time functions established by either user or door.

Features & Benefits

- A variety of credential functions are supported including normal, toggle, one time and pass through
- Auto unlock schedules - allows weekly repeating for automatic locking and unlocking of doors (up to 16 defined per system; up to 8 assigned per lock)
- Supports magnetic stripe, proximity and smart cards
- Supported devices include CO-200, CO-220, AD-200, CM, KC-2, CT-1000, CT5000, FE210 and BE367
- Supports Windows 11, Windows 10, Windows XP, Windows 7 and Windows 8
- User times zones- limits the hours and days a user can access assigned points (Up to 8)
- Holidays - suspends normal operations for user defined periods per door during non-normal days (Up to 16)
- Users/audits and lock support
- 2,000 Users/audits and 50 locks/ devices
- 1,000 Users/audits and 100 locks/ devices
- Supports 12 button keypad with up to 6 digit PIN codes
- Duplicate PIN notification feature

Please note: Schlage Express Software is NOT supported on the Home and Starter Versions of the Windows Operating Systems.

Specifications	
Hardware	Intel Pentium II processor (Pentium III or IV recommended), CD-ROM, mouse or compatible pointing device, VGA or Super VGA monitor, keyboard
Hard disk space	250 MB for software; will require additional space for stored data
Memory	256 MB RAM minimum or the memory required for the operating system, whichever is greater
Operating system	Microsoft Windows 11, Windows 10, Windows XP, Windows 7 and Windows 8 Please note that Schlage Express Software is NOT supported on the Home and Starter Versions of the Windows Operating Systems.
Reports with the built-in viewer Internet Explorer 6 or higher must be installed	
Required for programming	For offline locking system programming, the following is required: • Available USB port on the PC • Schlage Utility Software (SUS) mobile app on compatible Android devices and SUS-A cable • Legacy Schlage Handheld Device (HHD) is also supported
	For offline legacy locking system programming done directly from the PC, the following is required: • Available USB port on the PC • Programming interface cables

Ordering Information

- **SXPR-SFT-1** - Schlage Express software only

Accessories

- **SUS-A Cable** – For use with SUS mobile app on compatible Android devices
- **P512112** - Computer interface module used in conjunction with HH-Serial cable for managing legacy Schlage offline locks
- **P101203** - Computer Interface module with ibutton reader used in conjunction with HH-Serial Cable for managing legacy Schlage offline locks
- **P394548** - Female/female serial cable. Used to connect computer interface module to laptop/PC
- **SDB9USBCBL** - Six inch cable adapter allows a serial port device to be used with a USB port device (for use with PS12112)
- **CRP2** - Proximity credential enrollment reader. Used to read proximity data for enrollment into Schlage Express 4.0 and higher
- **CRM2** - Magnetic stripe credential enrollment reader. Used to read magnetic stripe data for enrollment into Schlage Express 4.0 and higher

Allegion, the Allegion logo, Schlage and the Schlage logo are trademarks of Allegion plc, its subsidiaries and/or affiliates in the United States and other countries. All other trademarks are the property of their respective owners.

© 2024 Allegion plc
003940, Rev. 01/24

Schlage Express™

Offline Access Control Software Capability Matrix

	CO-200 & CO-220	AD-200
System capacity at lock		
Number of users or audits/locks	2,000 users/audits, 50 lock max.	2,000 users/audits, 50 lock max.
	1,000 users/audits, 100 lock max.	1,000 users/audits, 100 lock max.
Holidays	16	16
1st person in	Yes	Yes
Time zones	8	8
Auto unlocks	8	8
Reader		
Keypad only	Yes	Yes
Magnetic stripe	Yes	Yes
Proximity	Yes	Yes
Multi-technology - 125 kHz prox and 13.56 MHz smart card	No	Yes
Card + PIN	Yes (3 to 6)	Yes (3 to 6)
Status monitors		
Mechanical key override (ATK)	Yes	Yes
Battery status	Yes	Yes

Note: Shaded boxes indicate features that are only available in Express v4.0 or higher. Previous versions (Express 3.5.7 and older) support 1000 users/audits and 100 locks, and do not include AD Series and CO Series software labels.

	CO-200 & CO-220	AD-200
Lock functions		
Storeroom	CO-200 only	Yes
Office/toggle/classroom	CO-200 only	Yes
Privacy	CO-200 only	Yes
Apartment	CO-200 only	Yes
Classroom security	CO-200 only	No
Credential attributes		
Normal credential	Yes	Yes
Toggle credential	Yes	Yes
Pass thru credential	Yes	Yes
Visitor/one time use credential	Yes	Yes
Freeze credential	Yes	Yes
Lock down credential	No	No

Allegion, the Allegion logo, Schlage, and the Schlage logo are trademarks of Allegion plc, its subsidiaries and/or affiliates in the United States and other countries. All other trademarks are the property of their respective owners.

© 2024 Allegion plc
009396, Rev. 01/24

NDE

Mobile Enabled Wireless Cylindrical Lock

Overview

The Schlage® NDE mobile enabled wireless cylindrical lock is designed to affordably extend electronic access control deeper into the building beyond traditional perimeter and high security openings and offers users the security and convenience of using a smart device to gain access.[1]

NDE wireless locks simplify installation by combining the lock, credential reader, door position sensor and request-to-exit switch all in one unit, eliminating the need to install additional components or run wires to each opening.

The open architecture design of NDE allows it to be managed by Allegion software or to be integrated into popular physical access control systems through our PACS Alliance program[2]. This enables customers to choose the system that best fits their requirements now and transition to another solution at any time.

NDE suites with all Schlage ND levers and keyways to provide attractive options to meet the requirements of nearly any environment.

Encryption Key & Credential Interoperability

- Hardware configured with our default encryption key or custom key developed by Schlage Custom Encryption Key Service (SCEKS) including NXP, HID® and NFC
- Schlage MIFARE® DESFire® and MIFARE Classic® credentials
- NFC mobile credentials in Apple Wallet® and Google Wallet™
- HID iCLASS®, iCLASS SE® and SEOS® plastic and NFC mobile credentials
- Other competitive credentials (see the Credential Compatibility Guide)

Schlage Credential Services

- CardTrax™ credential format sequencing service offering industry standard formats
- Custom format development

1. Dependent on access control software provider support of specific mobile credentials.
2. Integration with NDE mobile enabled wireless locks required for operation. For information on PACS providers and their capabilities visit us.allegion.com/alliances.

Features & Benefits

- NDE includes interior push button with indication for storeroom, office, privacy, and apartment applications
- Standard multi-technology credential compatibility includes Schlage MIFARE®, Bluetooth® and NFC mobile[1], and proximity
  - Optional support for HID® smart and NFC mobile credentials
- Wireless configuration from connected smartphones and tablets
- Built-in Wi-Fi® enables automated daily updates sent directly from host software
- Networked real-time communication available with the ENGAGE Gateway and PACS provider solutions[2]
- Ideal for office and suite entries, conference rooms, common area doors, resident units, and sensitive storage areas
- Fits mechanical ND door prep with minor modifications
- Weather resistant design
- Lever handing is field reversible in seconds; no tools required
- Up to 2 years of battery life

CYBERSECURITY
Learn about Allegion's commitment

Exterior of the Lock

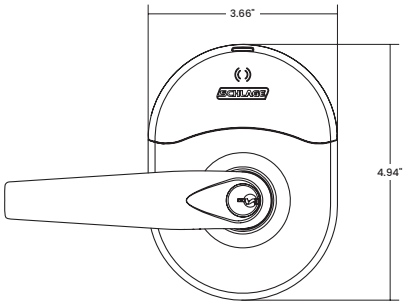

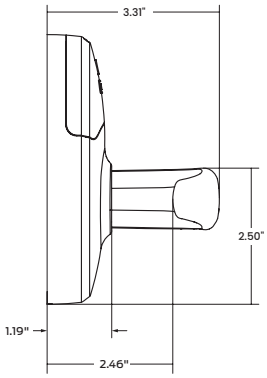

Interior of the Lock

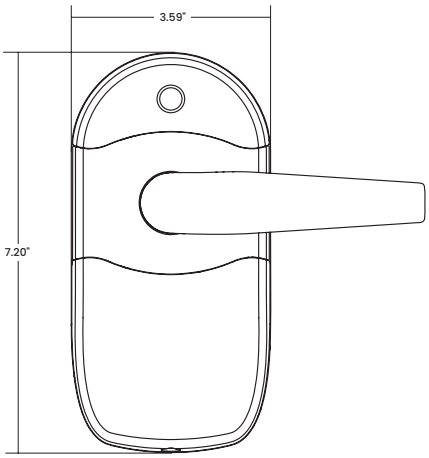

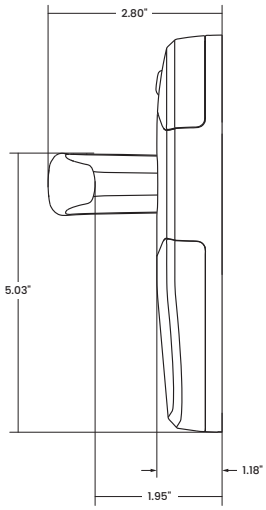

NDE Wireless Lock Specifications	
Users	Up to 5,000[1]
Audits	Up to 2,000[2]
Credential verification time[3]	Smart and proximity: ≤ 1 second Mobile: mobile device dependent
Visual communications	LED (red, amber, green)
Audible communications	Audible indicator (field configurable)
Communication standards	• 2.4 GHz Wi-Fi® (IEEE 802.11b/g/n) • WPA2, WPA, WEP, 802.1x • Bluetooth® low energy (version 4.2) • Transport Layer Security (TLS) version 1.2 • Advanced Encryption Standard (AES), 256-bit
Gateway communication range	Up to 30' in typical building environments. A detailed site survey is recommended using the ENGAGE Test Kit (TKE). Reference ENGAGE™ Gateway data sheet for additional detail.
Wake-Up on Radio	Responds to command from host in less than 5 seconds when linked to ENGAGE Gateway (requires PACS provider system)
Data rate	54 Mbps
Connectivity options	• Bluetooth via mobile device (send updates at the lock) • Wi-Fi access point (automatic daily updates[7]) • No-Tour[8] • ENGAGE Gateway (real-time communication) ◦ RS-485 to ACP or IP to host
Battery life[4]	Uses 4 AA batteries Up to 2 years
Operating temperature	Exterior: -31° to 151°F (-35° to 66°C) Exterior: -13° to 151°F (-25° to 66°C) (NDEBSi) Interior: 32° to 120°F (0° to 49°C) (battery)
Operating humidity	0 - 100% non-condensing
Certifications	ANSI/BHMA A156.25 locked outdoor; ANSI/BHMA A156.2, Series 4000, Grade 1; UL 294; ULC 60839; UL 10C 3 hour; CSA C22.2 No. 205-M1983; FCC Part 15; Industry Canada (IC); ADA compliant; ICC ANSI A117.1; FL1592, FL10356, FL12400, FL14482

Functionality
- Storeroom
- Office
- Privacy
- Apartment

NDE comes with Vandlgard® standard

Available Status Signals
- Request-to-exit
- Door position
- Interior cover tamper[5]
- Magnetic tamper
- Battery status
- Lock/unlock status[6]
- Communication status[5]

Flexible Solutions
NDE wireless locks offer connectivity options to fit any size budget or business.

1. Mobile
2. Wi-Fi
3. Real-time with ENGAGE Gateway
4. No-Tour[8]

Use the ENGAGE mobile app to commission and connect devices to your access control system of choice

Download on the App Store

ANDROID APP ON Google play

1. Maximum database storage capacity of lock. Can vary by access control software database capacity.
2. Maximum audit storage capacity of lock. Can vary by access control software audit storage capacity.
3. Response time does not include latency time of host when linked with an ENGAGE Gateway or when using No-Tour.
4. Assuming indoor application, default settings, 80 actuations, interior LED disabled and one Wi-Fi update per day.
5. Consult your access control software provider for specific scope of support.
6. Software indicates lock/unlock status based on sequence of events.
7. Daily update will occur within 24 hours as scheduled by the host
8. With MT20W and smart credential or mobile credential (consult your access control software provider for specific support).

Mechanical Specifications	
Chassis	Cylindrical
Handing	Right-handed from factory. Field reversible in seconds (no tools required).
ANSI standard (Meets or exceeds)	ANSI/BHMA A156.25-2013 (Indoor/Outdoor) ANSI/BHMA A156.2-2011, Series 4000, Grade 1
Door thickness	Standard: 1-5/8" - 2" (41mm - 51mm) only
Backset	Standard: 2-3/4" (70mm) Optional: 2-3/8" (60mm)
Latch bolt	Standard: 1/2" (12mm) throw deadlatch (steel) Optional: 3/4" (19mm) throw anti-friction deadlatch available for pairs of fire doors
Levers	Pressure cast zinc, plated
Strike	Standard: 1-3/16" lip, ANSI, DPS, 1-1/4" x 4-7/8" Optional: Additional strikes, lip lengths and ANSI strike box available
Cylinder and keys	Standard: Schlage 6-pin Everest 29 S123 keyway Conventional cylinder with two patented keys. Additional keying options available, including interchangeable cores, competitor brands, master keying and grand master keying.

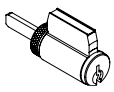
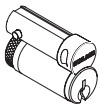

Compatible Cylinders			
Schlage key systems	**Conventional key-in-lever cylinder**	**Full size interchangeable core**	**Small format interchangeable core**
With cylinder	P, P6, Z	M, R	G7
Construction core	----	T	H
Disposable core	----	----	BDC
Less cylinder	L	J	B

Compatible cylinders listed above are supported on all levers.

SARGENT® - Less cylinder	L-SAR	J-SAR	----
Corbin Russwin® - Less cylinder	L-CO6	J-CO6, J-CO7	----
Yale® - Less cylinder	----	J-YA6, J-YA7	----
Medeco - Less cylinder	----	J-MED	----

Six-pin competitive cylinders listed above are supported on ATH, SPA, RHO, and TLR levers. Seven-pin competitive cylinders listed above are supported on RHO levers.

Standard Multi-Technology Reader Specifications	
Credential technologies	Proximity (125 kHz), Smart (13.56 MHz), Bluetooth Low Energy (BLE) (2.4 GHz), and Near Field Communication (NFC)
Standards	ISO standard 15693 and ISO 14443
Maximum read range	Proximity: up to 1.25" Smart: up to .75" Bluetooth Low Energy: up to 15' NFC: mobile device dependent
Proximity credential support	Compatibility: Schlage®, ISONAS™, HID4, GE/CASI ProxLite®, AWID® and LenelProx®
Smart credential support[1]	Secure sector compatibility: Schlage MIFARE Classic®, Schlage MIFARE Plus®, Schlage MIFARE® DESFire®; HID support with the Si option CSN only compatibility: HID iCLASS®, HID iCLASS SE®, Inside Contactless Pico Tag®, MIFARE Classic/Plus/DESFire2, ST Microelectronics®, Texas Instruments Tag-It®, Phillips I-Code®
Mobile credential support[3]	Schlage Mobile Bluetooth® credential, integrated PACS/Proptech mobile credential with Bluetooth, NFC mobile credentials in Apple Wallet® and Google Wallet™; HID NFC mobile support with the Si option

Mobile Enabled Retrofit Kits

Retrofit kits are available allowing the upgrade of legacy NDE locks to the mobile enabled model, adding the ability to read Bluetooth® mobile credentials and new functions supported by an interior push button with indication.

- Kit includes: Interior escutcheon with PCBA and DPS with lead (requires modified door prep)*

* Kit requires reuse of exterior of lock, lock chassis, existing levers/spring cages, battery cover, mounting screws and interior mounting plate.

Si Option with HID® Support

Supports:
- Secure application area of HID iCLASS®, iCLASS SE®, Seos® and MIFARE® DESFire® EV1 smart credentials
- iCLASS Standard Key and Elite Keys
- HID NFC mobile credentials
- All Schlage MIFARE and mobile credentials

Does not support:
- Proximity
- HID Seos Bluetooth mobile

1. No-Tour applications require a 1K Byte Schlage MIFARE smart credential
2. Specify CE-5901-0402 for ISONAS credential parity
3. Dependent on PACS /Proptech provider capabilities. Visit us.allegion.com/alliances for more information
4. Proximity bit lengths greater than 37 not supported

Allegion, the Allegion logo, ENGAGE, Schlage, the Schlage logo and Vandlgard are trademarks of Allegion plc, its subsidiaries and/or affiliates in the United States and other countries. The HID, iCLASS, iCLASS SE, Seos, SARGENT, Corbin, Russwin, and Yale trademarks are owned by ASSA ABLOY. All other trademarks are the property of their respective owners.

Ordering Information

NDEB - P6 - SPA - 626 - LAT - XXX - XX-XXX - XXXXXXXX - XXX - S123

Series	Lever Cylinder	Outside		Inside (optional)		Backset & Latch	Strike	Dim	Additional Details
		Lever Style	Finish	Lever Style	Finish				
1	2	3	4	5	6	7	8	9	10

Standard options are indicated with a dot. See price book for specific configuration options.

1 Series

NDEB	Mobile enabled cylindrical with configurable functions
NDEBSi	Mobile enabled cylindrical with configurable functions that supports HID® credential types

2 Lever Cylinder Type

P6	Schlage 6-pin Conventional key-in-lever

See price book for other SFIC, FSIC and Less Cylinder options available. Supports Schlage, SARGENT®, Corbin, Russwin®, and Yale®.

3/5 Lever

ATH	Athens[1]
BRK	Boardwalk[1]
BRW	Broadway[1]
LAT	Latitude
LON	Longitude
OME	Omega
RHO	Rhodes[1]
SPA	Sparta[1]
TLR	Tubular[1]

1. Available with tactile warning options.

4/6 Finish

605	Bright Brass
606	Satin Brass
612	Satin Bronze
619	Satin Nickel
622	Matte Black
625	Bright Chrome
626	Satin Chrome
626AM	Satin Chrome Antimicrobial
643e	Aged Bronze

7 Backset & Latch

• 13-247	2-3/4" backset deadlatch, square corner, 1-1/8" x 2-1/4"

See price book for additional backset and latch options.

8 Strike

• 47267101	1-1/4" x 4-7/8" with 1-3/16" lip (NDEB)

See price book for other available strikes.

9 Dim (strike lip length)

• 138	1-3/8" non-standard lip length

Enter only for non-standard strike lip lengths. See price book for other available non-standard lengths.

10 Additional Details

• S123	Everest 29

See price book for other available keyway options including restricted keyways in Primus XP high security cylinders and master keying.

Lever Styles

Conventional cylinders shown, SFIC and FSIC also available.

Athens

Boardwalk

Broadway

Latitude

Longitude

Rhodes

Sparta

Tubular

Finishes

605
Bright Brass

606
Satin Brass

612
Satin Bronze

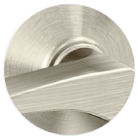
619
Satin Nickel

622
Matte Black

625
Bright Chrome

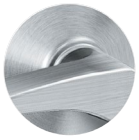
626
Satin Chrome

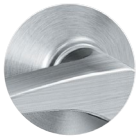
626AM
Satin Chrome Antimicrobial

643e
Aged Bronze

© 2024 Allegion plc
010409, Rev. 10/24

LE

Mobile Enabled Wireless Mortise Lock

Overview

The Schlage® LE mobile enabled wireless mortise lock is designed to affordably extend electronic access control deeper into the building beyond traditional perimeter and high security openings and offers users the security and convenience of using a smart device to gain access[1].

LE wireless locks simplify installation by combining the lock, credential reader, door position sensor and request-to-exit switch all in one unit. LE requires only minor modifications to existing mechanical mortise prep with no wires to run to the lock or additional components necessary.

The open architecture design of LE allows it to be managed by Allegion software or to be integrated into popular physical access control systems through our PACS Alliance program[2]. This enables customers to choose the system that best fits their requirements now and transition to another solution at any time

LE suites with Schlage L Series levers, finishes and keyways to provide a wide selections of attractive options to meet the requirements of nearly any environment.

Encryption Key & Credential Interoperability

- Hardware configured with our default encryption key or custom key developed by Schlage Custom Encryption Key Service (SCEKS) including NXP, HID® and NFC
- Schlage MIFARE® DESFire® and MIFARE Classic® credentials
- NFC mobile credentials in Apple Wallet® and Google Wallet™
- HID iCLASS®, iCLASS SE® and SEOS® plastic and NFC mobile credentials
- Other competitive credentials (see the Credential Compatibility Guide)

Schlage Credential Services

- CardTrax™ credential format sequencing service offering industry standard formats
- Custom format development

1. Dependent on access control software provider support of specific mobile credentials.
2. Integration with LE mobile enabled wireless locks required for operation. For information on PACS providers and their capabilities visit us.allegion.com/alliances.
3. Door position switch requires additional prep for mortise deadbolt (MD) applications.

Features & Benefits

- Available with indicator, interior push button, or deadbolt for storeroom, privacy, apartment, and office applications
- Standard multi-technology credential compatibility includes Schlage MIFARE®, Bluetooth® and NFC mobile[1], and proximity
  - Optional support for HID® smart and NFC mobile credentials
- Wireless configuration from connected smartphones and tablets – no proprietary device needed
- Built-in Wi-Fi® enables automated daily updates sent directly from host software
- Networked real-time communication available with the ENGAGE Gateway and PACS provider solutions[2]
- Innovative integrated door position switch requires no additional door prep[3]
- Ideal for office and suite entries, conference rooms, common area doors, resident units, and sensitive storage areas
- Weather-resistant design
- Up to 2 years of battery life

CYBERSECURITY
Learn about Allegion's commitment

Exterior of the Lock

Addison

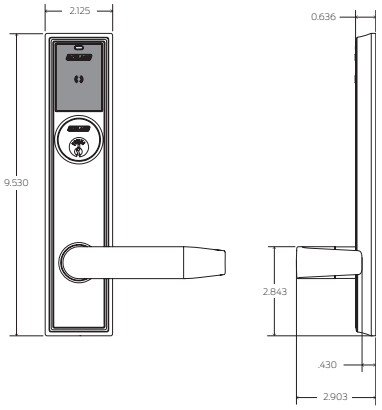

Greenwich

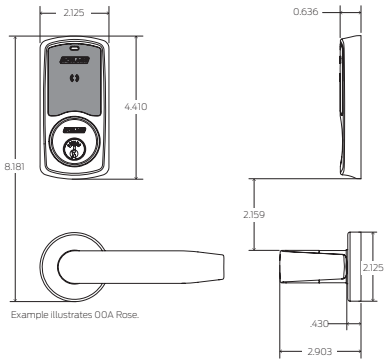

Example illustrates 00A Rose.

Interior of the Lock

Addison

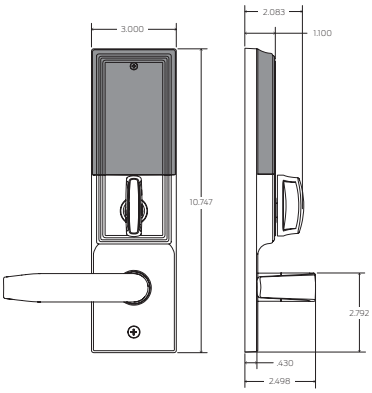

Greenwich

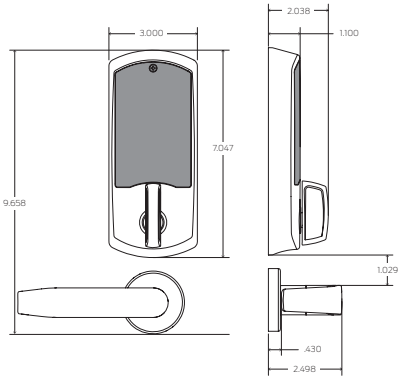

LE Wireless Lock Specifications	
Users	Up to 5,000[1]
Audits	Up to 2,000[2]
Credential verification time[3]	Smart and proximity: ≤ 1 second Mobile: mobile device dependent
Visual communications	Exterior LED (red, amber, green); Interior LED (red, green)
Audible communications	Audible indicator (field configurable)
Communication standards	• 2.4 GHz Wi-Fi® (IEEE 802.11b/g/n) • WPA2, WPA, WEP, 802.1x • Bluetooth® low energy (version 4.2) • Transport Layer Security (TLS) version 1.2 • Advanced Encryption Standard (AES), 256-bit
Gateway communication range	Up to 30' in typical building environments. A detailed site survey is recommended using the ENGAGE Test Kit (TKE). Reference ENGAGE™ Gateway data sheet for additional detail.
Wake-Up on Radio	Responds to command from host in less than 5 seconds when linked to ENGAGE Gateway (requires PACS provider system)
Data rate:	54 Mbps via Wi-Fi
Connectivity options	• Bluetooth via mobile device (send updates at the lock) • Wi-Fi access point (automatic daily updates[7]) • No-Tour[8] • ENGAGE Gateway (real-time communication) ◦ RS-485 to ACP or IP to host
Battery life[4]	Uses 4 AA batteries Up to 2 years
Operating temperature	Exterior: -31° to 151°F (-35° to 66°C) Exterior: -13° to 151°F (-25° to 66°C) (LEBSi) Interior: 32° to 120°F (0° to 49°C) (battery)
Operating humidity	0 - 100% non-condensing
Certifications	ANSI/BHMA A156.25 locked outdoor; ANSI/BHMA A156.13, Series 1000, Grade 1; UL 294; ULC 60839; UL 10C 3 hour; FCC Part 15; Industry Canada (IC); ADA compliant; FL1592, FL3905, FL4613, FL10356, FL12400, FL14482

Chassis/Functions

- MS mortise with indicator:
  - Storeroom
- MB mortise with push button:
  - Privacy
  - Office
  - Apartment
- MD mortise deadbolt:
  - Privacy
  - Apartment

Available Status Signals

- Request-to-exit
- Door position
- Interior cover tamper[5]
- Battery status
- Lock/unlock status[6]
- Communication status[5]
- Deadbolt position status (MD only)[5]
- Interior pushbutton status (MB only)[5]

Flexible Solutions

LE wireless locks offer connectivity options to fit any size budget or business.

1. Mobile
2. Wi-Fi
3. Real-time with ENGAGE Gateway
4. No-Tour[8]

Use the ENGAGE mobile app to commission and connect devices to your access control system of choice

Download on the App Store

ANDROID APP ON Google play

1. Maximum database storage capacity of lock. Can vary by access control software database capacity.
2. Maximum audit storage capacity of lock. Can vary by access control software audit storage capacity.
3. Response time does not include latency time of host when linked with an ENGAGE Gateway or when using No-Tour.
4. Assuming indoor application, default settings, 80 actuations, interior LED disabled and one Wi-Fi update per day.
5. Consult your access control software provider for specific scope of support.
6. Software indicates lock/unlock status based on sequence of events.
7. Daily update will occur within 24 hours as scheduled by the host.
8. With MT20W and smart credential or mobile credential (consult your access control software provider for specific support).

Mechanical Specifications	
Chassis	MS mortise with LED indicator; MB mortise with push button and LED; MD mortise with deadbolt and LED
Handing	Handed to order, field reversible
ANSI standard (Meets or exceeds)	ANSI/BHMA A156.25-2013 (Indoor/Outdoor) ANSI/BHMA A156.13-2012, Series 1000, Grade 1 With interchangeable core cylinders: Grade 2 Security
Door thickness	Standard: 1-3/4" (44 mm) Optional: 1-3/4" (44 mm) to 2-1/4" (57 mm) optional (SFIC limited to 2" max)
Backset	Standard: 2-3/4" (70mm)
Latch bolt	Standard: 3/4" (19 mm) throw stainless steel latch bolt with anti-friction tongue
Deadbolt	Standard: 1" (25 mm) throw stainless steel deadbolt
Levers	Forged brass or bronze
Strike	Standard: ANSI 1-1/4" x 4-7/8" (32 mm x 124 mm) x 1-3/16" (30 mm) curved lip strike with dust box Optional: Additional strike lip lengths and ANSI strike box available
Cylinder and keys	Standard: Schlage 6-pin Everest 29 S123 keyway Conventional cylinder with two patented keys. Additional keying options available: Conventional and interchangeable cores, master keying, and grand master keying. Compatible with competitor cylinders and cams that support the L9000 Series.
Armored front	1-1/4" x 8" x 7/32" (32mm x 203 mm x 6 mm) only

Compatible Cylinders

	Mortise cylinder	Full size interchangeable core - FSIC	Small format interchangeable core - SFIC
With cylinder	P, P6, Z	M, R	G7
Less cylinder	L	J*	B*
Construction core	—	T	H
Disposable core	—	—	BDC

* Sold with cylinder housing - less core.

Note: Available in formats to support residential customers - 5-pin cylinder with C keyways.
Need to specify keyway and pinning needs. Standard if not specified - P, 6-pin Everest 29 with S123 keyway.

Standard Multi-Technology Reader Specifications	
Credential technologies	Proximity (125 kHz), Smart (13.56 MHz), Bluetooth Low Energy (BLE)(2.4 GHz), and Near Field Communication (NFC)
Standards	ISO standard 15693 and ISO 14443
Maximum read range	Proximity: up to 1.25" Smart: up to .75" Bluetooth Low Energy: up to 15' NFC: mobile device dependent
Proximity credential support	Compatibility: Schlage®, ISONAS™, HID4, GE/CASI ProxLite®, AWID® and LenelProx®
Smart credential support[1]	Secure sector compatibility: Schlage MIFARE Classic®, Schlage MIFARE Plus®, Schlage MIFARE® DESFire®; HID support with the Si option CSN only compatibility: HID iCLASS®, HID iCLASS SE®, Inside Contactless Pico Tag®, MIFARE Classic/Plus/DESFire[2], ST Microelectronics®, Texas Instruments Tag-It®, Phillips I-Code®
Mobile credential support[3]	Schlage Mobile Bluetooth® Credential, integrated PACS/Proptech mobile credential with Bluetooth, NFC mobile credentials in Apple Wallet® and Google Wallet™; HID NFC mobile support with the Si option

1. No-Tour applications require a 1K Byte Schlage MIFARE smart credential.
2. Specify CE-5901-0402 for ISONAS credential parity.
3. Dependent on PACS provider capabilities. Visit us.allegion.com/alliances for more information.
4. Proximity bit lengths greater than 37 not supported.

Mobile Enabled Retrofit Kits

Retrofit kits are available allowing the upgrade of legacy LE locks to the mobile enabled model, enabling them to read Bluetooth® mobile credentials.

- Kit includes: Complete interior escutcheon with PCBA*

* Kit requires reuse of exterior of lock, lock chassis, existing levers/spring cages, battery cover, mounting screws and interior mounting plate.

Si Option with HID® Support

Supports:

- Secure application area of HID iCLASS®, iCLASS SE®, Seos® and MIFARE® DESFire® smart credentials
- iCLASS Standard Key and Elite Keys
- HID NFC mobile credentials
- All Schlage MIFARE and mobile credentials

Does not support:

- Proximity
- HID Seos Bluetooth mobile

Allegion, the Allegion logo, ENGAGE, Schlage, the Schlage logo and Vandlgard are trademarks of Allegion plc, its subsidiaries and/or affiliates in the United States and other countries. The HID, iCLASS, iCLASS SE, Seos, SARGENT, Corbin, Russwin, and Yale trademarks are owned by ASSA ABLOY. All other trademarks are the property of their respective owners.

Ordering Information

LEB - MS - GRW - P6 - 07 - 626 - 00A - 17 - 622 - 00A - LH - 10-136 - 134 - S123

Series	Chassis/ function	Style	Cylinder Type	Outside			Inside (optional)			Handing	Strike Lip	Door Thickness	Key System	Additional Options
				Lever Style	Finish	Rose (GRW only)	Lever Style	Finish	Rose (GRW only)					
1	2	3	4	5	6	7	8	9	10	11	12	13	14	15

Standard options are indicated with a dot. See price book for specific configuration options.

1 Series / 2 Chassis / Function

LEBMS	Mobile enabled mortise with indicator only
LEBMB	Mobile enabled mortise with interior push button
LEBMD	Mobile enabled mortise with deadbolt
LEBSiMS	Mobile enabled mortise with indicator only that supports HID® credential types
LEBSiMB	Mobile enabled mortise with interior push button that supports HID® credential types
LEBSiMD	Mobile enabled mortise with deadbolt that supports HID® credential types

Prior to ordering, confirm support with preferred PACS provider, visit us.allegion.com/alliances.

3 Style

GRW	Greenwich (sectional)
ADD	Addison (escutcheon)

4 Cylinder type

P6	Schlage 6-pin Conventional cylinder

See price book for other mortise cylinder, SFIC, FSIC and Less Cylinder options.

5/8 Lever

03	Suites with Tubular
06	Suites with Rhodes
07	Suites with Athens
17	Suites with Sparta
LAT	Latitude

Available in 31 levers and two knob styles including most M Series decorative lever options.

6/9 Finish

605	Bright Brass
606	Satin Brass
612	Satin Bronze
619	Satin Nickel
622	Matte Black
625	Bright Chrome
626	Satin Chrome
626AM	Satin Chrome Antimicrobial
643e	Aged Bronze

7/10 Rose (GRW style only)

00A	2-1/8" (54 mm) diameter
00B	2-9/16" (65 mm) diameter
00C	2-5/8" (66 mm) diameter with bevel (not available in 612 finish)

MER and AVA decorative rose options are also available, but only with MER and ACC lever styles. Inside rose will default to outside unless specified.

11 Handing

• RH	Right handed
LH	Left handed
RHR	Right handed reverse
LHR	Left handed reverse

Defaulted to Right Hand, if not specified. The chassis can be changed in the field, with some exceptions. See pricebook for additional details.

12 Strike Plate/Lip Length

• 10-136	1-3/16" lip length (MS and MB)
• 10-072	1-3/16" lip length (MD)

Additional lip length options 7/8" to 1-3/4". See price book for details.

13 Door Thickness

• 134	1-3/4" (44 mm)

Optional: 1-3/4" (44 mm) to 2-1/4" (57 mm).
2" maximum door thickness on SFIC cylinders.
See price book for additional details.

14 Keying type

• S123	Everest 29

See price book for other available keyway options including restricted keyways in Primus XP high security cylinders and master keying.

15 Additional options

Other thicknesses available between 1-3/8" and 2-3/4" See price book for details.

Finishes

605
Bright Brass

606
Satin Brass

612
Satin Bronze

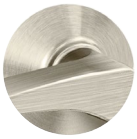
619
Satin Nickel

622
Matte Black

625
Bright Chrome

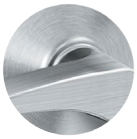
626
Satin Chrome

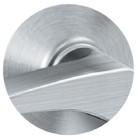
626AM
Satin Chrome
Antimicrobial

643e
Aged Bronze

© 2024 Allegion plc
011389, Rev. 10/24

Mobile Enabled Retrofit Kits

For Legacy Schlage NDE & LE Wireless Locks

Overview

Retrofit Kits are available to upgrade legacy Schlage NDE and LE wireless locks to the mobile enabled model, enabling them to read Bluetooth® mobile credentials[1] in addition to existing NFC mobile, smart and proximity support. This economic solution allows customers to upgrade current locks on their site, giving employees and residents the convenience of using their mobile phones to gain access.

NDE to NDEB Retrofit Kits

Also supports additional functionality with a new interior push button with indication.

- Kit includes interior escutcheon with PCBA, DPS with lead (new DPS requires modified door prep)
- Kit does not include and requires reuse of exterior of lock, lock chassis, existing levers/spring cages, battery cover, mounting screws, interior mounting plate

Part Number, Specify Finish:

47278749

LE to LEB Retrofit Kits

- Kit includes interior escutcheon with PCBA
- Kit does not include and requires reuse of exterior of lock, lock chassis, existing levers/spring cages, battery cover, mounting screws, interior mounting plate

Part Numbers, Specify Finish:

Greenwich	Addison
MS - 47270614	MS - 47270618
MB - 47270613	MB - 47270617
MD - 47270612	MD - 47270616

1. Use with the Schlage Mobile Bluetooth® Credential or compatible PACS mobile credential solution. Consult your Allegion sales representative for more information.

This page intentionally left blank.

Allegion, the Allegion logo, Schlage and the Schlage logoare trademarks of Allegion plc, its subsidiaries and/or affiliates in the United States and other countries. All other trademarks are the property of their respective owners.

© 2024 Allegion plc
013616, Rev. 10/24

Schlage Control® Smart Lock

Mobile Enabled Wireless Deadbolt & Interconnected Lock

Overview

The Schlage Control® mobile enabled smart lock was designed specifically for multifamily resident doors. It allows properties to offer smart security to residents and intelligent efficiency to property managers.

Residents will appreciate the security and convenience of using smart devices and/or smart credentials to open their doors today. And, through compatibility with Bluetooth® and NFC mobile credentials, Schlage makes it possible for software providers to enable residents to arrange in-unit package delivery and other services in the future.*

The open architecture capabilities of Schlage Control mobile enabled smart locks offer properties the freedom to use the physical access control (PACS) or Proptech provider of their choice to manage security and a wide spectrum of needs. Through these providers, properties are able to extend the possibilities of their locks beyond security.

For a simpler solution, managing access rights couldn't be easier than by using Allegion software. Staff can configure and manage access from virtually anywhere. And with the capability to view history of access, get usage data, receive alerts and more, it improves the intelligence and productivity of the staff and property.

Schlage Control mobile enabled smart locks are part of an extensive portfolio from Allegion™, which offers solutions for every opening within a multifamily property.

Features & Benefits

- Mobile enabled Schlage Control is ready for the future with the ability to read Schlage MIFARE® smart, Bluetooth® and NFC mobile[1] credentials
- Deadbolt (BE467F) and interconnected lock (FE410F) options
- Two styles with a broad selection of finishes and decorative lever designs
- Eliminates cost and hassle of managing keys
- AES-256 encryption keeps data and communications safe
- Interconnected lock provides single motion egress to comply with regional requirements
- Lock programming via smartphone or tablet (Bluetooth® connection)
- Supports networked (Gateway required), No-Tour and standalone applications

1. Use of mobile credential is dependent on availability of compatible mobile credential.
2. Dependent on PACS provider integrations and capabilities. Go to us.allegion.com/alliances for more information.

CYBERSECURITY
Learn about Allegion's commitment

Design & Style

Schlage Control® mobile enabled smart locks have style options to fit the design of any property and offer full suiting with Schlage decorative mechanical locks and other Allegion solutions.

Finish Options

619 Satin Nickel | 622 Matte Black | 625 Bright Chrome | 626 Satin Chrome | 716 (643e) Aged Bronze

BE467F - Addison

BE467F - Greenwich

FE410F - Addison

FE410F - Greenwich

FE410F Lever Options

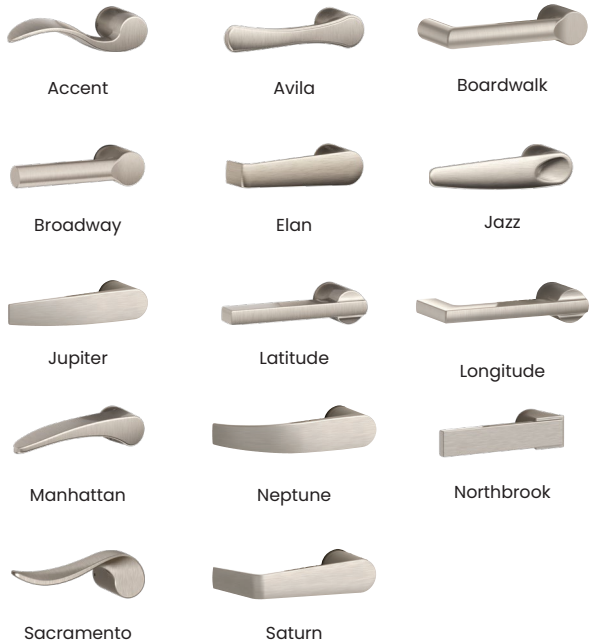

Note: Reference current pricebook to confirm finishes available by lever style.

Dimensional Drawings

BE467F

Addison - exterior / interior

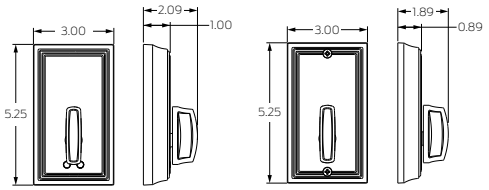

Greenwich - exterior / interior

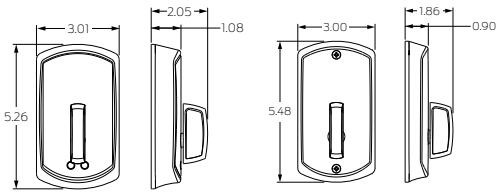

FE410F

Addison - 5.5" and 4" exterior / interior

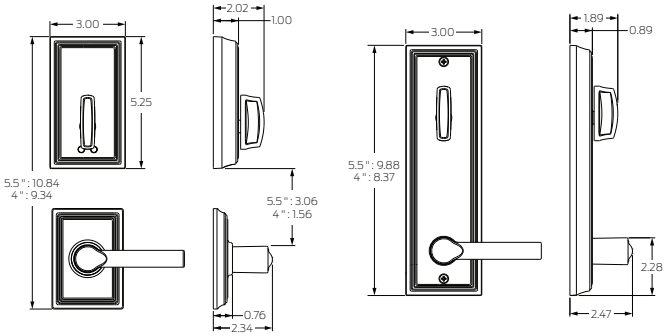

Greenwich - 5.5" and 4" exterior / interior

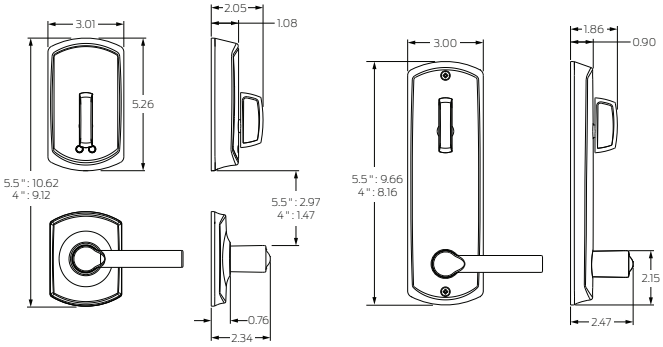

Choice Means Control

By working with the industry's best-in-class access control providers, we give properties the freedom to choose.

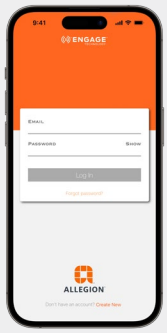

Use the ENGAGE mobile app to commission and connect devices to your access control system of choice

Download on the App Store

ANDROID APP ON Google play

PACS/Proptech Provider Solutions

Schlage Control® mobile enabled smart locks are designed with open architecture capabilities. Because of this, multifamily properties have the flexibility to select the integrated physical access management (PACS) or Proptech system that best suits their needs and budget.

Visit us.allegion.com/alliances for more information on our PACS/Proptech providers and their capabilities.

Credentials

Residents are able to use a smart credential (fob, card or wristband) and/or a smart device to unlock their Schlage Control® mobile enabled smart lock – eliminating the need for traditional keys and saving properties time and money.

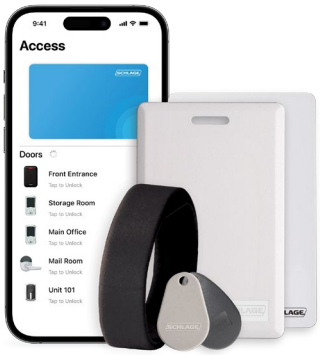

Specifications

Electronic Specifications	
Users	Up to 500[1]
Audits	1,000 minimum[2]
Visual and audible communications	Exterior LED (red, amber, green) Audible indicator (field configurable)
Communication standards	Bluetooth® low energy (version 4.2) Advanced Encryption Standard (AES), 256-bit
Gateway communication range (networked solution)	Up to 30' in typical building environments. A detailed site survey is recommended.
Wake-Up on Radio	Responds to command from host in less than 5 seconds when linked to ENGAGE Gateway (requires PACS provider solution)
Connectivity options	Bluetooth via mobile device (send updates at the lock) No-Tour[3] ENGAGE Gateway (real-time communication)
Available status signals	Battery status
Battery life	Up to 1-1/2 years (offline mode), up to 1 year (Bluetooth credential enabled); 4 AA batteries included
Operating temperature	Exterior: -31° to 151°F (-35° to 66°C) Interior: 14° to 122°F (-10° to 50°C)
Operating humidity	0 - 100% non-condensing

Reader Specifications	
Credential technologies	Smart (13.56 MHz), Bluetooth Low Energy (LE) (2.4 GHz) Near Field Communication (NFC)
Standards	ISO 14443
Maximum read range	Smart: up to 1.25" Bluetooth Low Energy: up to 15' NFC: mobile device dependent
Smart credential support	Schlage MIFARE Classic®, Schlage MIFARE® DESFire® EV1 and EV3
Mobile credential support[4]	Schlage Mobile Bluetooth Credential, Integrated PACS mobile credential with Bluetooth, NFC resident key in Apple Wallet® and Google Wallet™

1. Maximum database storage capacity of lock. Can vary by access control software database capacity.
2. Maximum audit storage capacity of lock. Can vary by access control software audit storage capacity.
3. With MT20W and smart credential (1K byte Schlage MIFARE smart credential) or mobile credential (consult your access control software provider for specific support).
4. Check with PACS provider for specific support of mobile credentials.

Allegion, the Allegion logo, ENGAGE, Schlage and the Schlage logo are trademarks of Allegion plc, its subsidiaries and/or affiliates in the United States and other countries. All other trademarks are the property of their respective owners.

Specifications

Mechanical Specifications	
Handing	Field reversible (FE410F)
Materials	All-metal chassis and escutcheon
Door thickness	1-3/8" - 1-3/4" (thick door kit available - up 2-1/4" for BE467F, up to 2" for FE410F)
Backset	Adjustable backset, fits 2-3/8" to 2-3/4" backsets
Latch	1" x 2-1/4" square and round corner faceplate (round corner standard, square corner included in package) 1" edge bore required
Deadbolt	Standard 1" (25 mm) throw
Strike	1-1/8" x 2-3/4", round corner, no box, latch strike Optional: Additional strike lip lengths and ANSI strike box available
Bore	2-1/8"
Stile width	Minimum 4-1/2" stile for 2-3/8" backset, minimum 5" stile for 2-3/4" backset

Certifications	
Certifications	BE467F: ANSI/BHMA A156.36 Grade 2 FE410F: ANSI/BHMA A156.12 Grade 2 ANSI/BHMA A156.5 Grade 2; UL 10C 90 minute; CAN ULC S104 90 minutes (20 minute wood core doors); FCC Part 15; Industry Canada (IC); ADA compliant; FL3625

Ordering Information

FE410F - GRW - LAT - 626 - 55

Series	Style	Outside		Inside		nterconnect Type	Latch	Strike
		Lever Style	Finish	Lever Style	Finish			
1	2	3	4	5	6	7	8	9

See price book for specific configuration options.

1 Series	
BE467F	Schlage Control mobile enabled smart deadbolt
FE410F	Schlage Control mobile enabled smart interconnected lock

2 Escutcheon Style	
ADD	Addison
GRW	Greenwich

3/5 Lever[1, 2] (for FE410F only)	
ACC	Accent
VLA	Avila
BRK	Boardwalk
BRW	Broadway
ELA	Elan
JAZ	Jazz
JUP	Jupiter
LAT	Latitude
LON	Longitude
MNH	Manhattan
NEP	Neptune
NBK	Northbrook
SAC	Sacramento
SAT	Saturn

4/6 Finish[1]	
619	Satin Nickel
622	Matte Black
625	Bright Chrome
626	Satin Chrome
716	Aged Bronze

7 Interconnect Type (for FE410F only)	
4"	For doors with 4" bore hole spacing (40)
5-1/2"	For doors with 5-1/2" bore hole spacing (55)

8 Latch	
12-398	Standard for BE467F - 90 min UL Deadbolt latch dual option (sq+rd)
12-356	Standard for FE410F - Combo latch, dual option (sq+rd), non-UL bolt, UL latch

9 Strike for BE467F	
10-116	Round corner strike, 1-1/8" x 2-3/4" - Standard
10-147	Square corner strike, 1 -1/8" x 2-3/4"
10-095	Square corner full lip strike, 1-5/8" x 2-1/4" (Lip length: 1-1/8")
10-092	Round corner full lip strike, 1-5/8" x 2-1/4" (Lip length: 1-1/8")

10 Strike Combinations for FE410F	
10-152	Combo strike, square corner (10-147 and 10-026) - Standard
10-151	10-147 and 10-001
10-119	10-081 and 10-001
47344383	10-116 and 10-027
10-123	10-092 and 10-027
10-124	10-095 and 10-027

1. Only specify one finish if outside and inside are the same.
2. Some levers not available in all finishes - see price book for details.

© 2024 Allegion plc
013252, Rev. 10/24

MT20W

Credential Enrollment Reader with ENGAGE™ Technology

Overview

The Schlage® MT20W multi-technology enrollment reader is designed to simplify the enrollment of smart and multi-technology credentials in "No-Tour" multifamily applications. Site administrators use the MT20W to program encrypted credentials, such as a keyfob, over Wi-Fi or USB connection to PC. When presented at a lock by the resident or user, the pre-programmed credentials automatically update the lock database. This eliminates the need for the property staff to have to visit each lock to deliver updates.

The MT20W is compatible with Schlage smart credentials (MIFARE Classic®, MIFARE Plus® and MIFARE® DESFire®) and supports no-tour access control when used with supported locks.

* Discontinued but still supported.

Features & Benefits

- Use your computer and the ENGAGE web app to easily enroll credentials
- Recognizes Schlage smart and multitechnology credentials (MIFARE Classic, MIFARE Plus* and MIFARE DESFire)
- Simplifies credential enrollment
- Communicates to server either through a Wi-Fi connection or your computers USB port
- Limited Lifetime Warranty

CYBERSECURITY
Learn about Allegion's commitment

MT20W

Credential Enrollment Reader with ENGAGE™ Technology

Model	MT20W
Reader type	USB Enrollment Reader
Connection requirements	Wi-Fi requires 2.4 GHz router that supports data connection speeds of 24 Mbps. USB data share via a desktop app is available as well; click here to access the ENGAGE™ web portal.
Bit formats recognized	26A, 32X, 34N, 34S, 35C, 37X, 37H, 40X
Technologies supported	Schlage MIFARE Classic® Secure Sector Schlage MIFARE Plus® Secure Sector Schlage MIFARE® DESFire® with PACSA Secure Application
Physical dimensions (l x w x h)	5.56" x 2.00" x .695"
Operating temperatures	0° to 40°C 32° to 104°F
Weight	4.1 oz
Power supply	Connect to powered USB port or via USB power supply
Interface	USB and WiFi
Current requirement	160 mA

Allegion, the Allegion logo, Schlage and the Schlage logo are trademarks of Allegion plc, its subsidiaries and/or affiliates in the United States and other countries. All other trademarks are the property of their respective owners.

© 2024 Allegion plc

011168, Rev. 10/24

GWE Gateway

ENGAGE™ Gateway with IP (PoE) & RS-485 Communication

Overview

The ENGAGE™ Gateway is designed to be used with devices that are on the ENGAGE™ Platform, including Schlage Control®, LE, NDE, CTE as well as Von Duprin® Remote Undogging (RU) and Remote Monitoring (RM). The ENGAGE Gateway enables these devices to be connected in real-time with Physical Access Control Software (PACS) providers. Each ENGAGE Gateway can support up to 10 wireless devices for a wide range of applications, including resident units, office and suite entries, conference rooms, sensitive storage areas and perimeter entries.

Security

The ENGAGE Platform was designed from the ground up with security in mind. It leverages industry-leading security practices, including AES 256 bit and TLS encryption to provide customers with a secure, dependable experience.

Reliability

Regular, frequent communication between the Gateway and linked ENGAGE™ Platform devices allows the Gateway to send commands such as lock, unlock and lock down from an ACP or IP host in real-time (commands are executed in < 5 seconds). All while enabling up to a 2-year battery life in linked wireless devices.

Efficiency

The ENGAGE Gateway provides the ability to leverage existing IP based or RS-485 infrastructure for maximum efficiency. Ethernet connectivity provides ability to connect to the network for real-time access control directly from an in- or out-of-network host; to further simplify installation the Gateway can be powered over ethernet (PoE). Additionally, it is designed to work seamlessly in an existing RS-485 environment to extend access control to more doors. It can be powered from the access control panel (ACP) or from the 12VDC supply (included).

Features & Benefits

- Small form factor, versatile design fits almost anywhere
- Plug and play connectivity without opening or drilling into the housing. External recessed power, antenna, RS-485 and Ethernet (PoE) ports for easy set-up
- Designed to work seamlessly in an existing RS-485 environment
- Designed with PoE built in to leverage a building's existing network infrastructure for communication and power
- Easily and securely commissions in seconds with the ENGAGE™ mobile app—no proprietary handheld device required
- Secure AES-256 bit encrypted 2.4 GHz Bluetooth 4.0 communication between Gateway and ENGAGE™ Platform devices does not interfere with Wi-Fi networks
- Capable of managing up to 10 ENGAGE Platform devices
- Optional 12 VDC external power supply included to achieve UL294 Listing

CYBERSECURITY
Learn about Allegion's commitment

Gateway Specifications	
Communication protocol (Gateway to Lock)	2.4 GHz Bluetooth version 4.0 (spread spectrum, dynamic channel switching, 40 channels)
Transmission/encryption (Gateway to Lock)	AES-256 bit key
Credential verification time	< 1 second[1]
BLE communication range	A detailed site survey is recommended to determine range in each unique environment. Up to 30' can be achieved in typical building environments. Under ideal conditions, up to 50' line of sight may be possible. A detailed site survey is recommended to determine if the extended range can be achieved. Performance is dependent on local physical (geometry, construction materials, and furnishings) and RF environment. For planning purposes users should consider estimating at least 10% contingency for Gateway quantity. The TKE ENGAGE Test Kit is available for site surveys. Reference the ENGAGE Gateway Placement Guide for details.
Visual communications	LED status indicators
System interface	Ethernet to IP host[2] RS-485 to ACP[3]
Transmission/encryption (Gateway to ACP or IP host)	TLS version 1.2 or greater (to IP host) Optional AES-128 bit key (to ACP)
Gateway Discovery Methods (by partner IP host)	Zero-configuration (zeroconf), Static IP, or DHCP with hostname option
Power supply	PoE (12.95W compliant to IEEE 802.3af/at) 12 VDC or 24 VDC (terminals)
Operating current	PoE: 60 mA 12 VDC: 330 mA, 24 VDC: 100 mA
Operating temperature	32° to 120°F (0° to 49°C)
Operating humidity	0% to 100% non-condensing
Dimensions (H x W x D)	5.1" x 6.0" x 1.2" (13.0 cm x 15.3 cm x 3.04 cm)
Weight	8.6 oz (.24 kg)
Cable specifications	DC terminal input: 18AWG, 2 conductor (Belden 8760 or equivalent) up to 1000 ft (305 m) Gateway to ACP: 24AWG, 2 or 4 conductor shielded (Belden 9842, 9841 or equivalent) up to 4000 ft (1219 m) Gateway to router: CAT3, CAT5/5E or CAT6 up to 328 ft (100 m)
Data rate	Gateway to Lock: up to 1 Mbps (Bluetooth) Gateway to ACP: 9.6 kbps (RS-485) Gateway to IP Host: up to 100 Mbps (Ethernet)
Certifications	UL294, FCC Part 15, Industry Canada(IC), RoHS

1. Dependant on latency time of access control system.
2. Supports NDE, LE, CTE, Schlage Control Smart locks and Von Duprin RU and RM.
3. Supports NDE, LE and Von Duprin RU and RM.

Ordering Information

GWE – ENGAGE Gateway with RS-485 and IP (PoE) connectivity. Supports up to 10 ENGAGE™ Platform devices with select brands of access control panels.

Allegion, the Allegion logo, Schlage, the Schlage logo, and Von Duprin are trademarks of Allegion plc, its subsidiaries and/or affiliates in the United States and other countries. All other trademarks are the property of their respective owners.

Additional Features

Real-Time Communications

Regular, frequent communication between the Gateway and linked ENGAGE Platform devices allows the Gateway to send commands such as lock, unlock and lock down from an ACP or IP host in real-time (commands are executed in < 5 seconds). All while enabling up to a 2-year battery life in linked wireless devices.

Secure Encrypted Transmissions

All communications between the Gateway, the ENGAGE mobile app and ENGAGE Platform devices are encrypted with an AES-256 bit key to provide virtually uncompromisable security. Additionally, all communications between the Gateway and an IP host over an existing network are secured with TLS 1.2 (or newer) encryption.

Visual Indications

- Power up
- Factory default state
- Connected to mobile device
- Normal operation
- Linking status
- Diagnostics

Edge Device Status*
(available through host connection)

- Card data
- Door position
- Loss of communication
- Request-to-exit
- Request-to-enter
- Low battery
- Interior cover tamper guard
- Lock/unlock status
- Deadbolt position
- Interior push button

Configurable Items from Gateway*

- Relock parameters
- Card data format conversion
- Extended unlock
- Fail safe/fail secure/fail as-is
- Door held pre-alarm
- Cache memory parameters
- Reader configuration
- Keypad configuration
- Inside pushbutton configuration
- User interface configuration

* Capability varies by edge device. Refer to device solution sheet.

© 2024 Allegion plc
010842, Rev. 01/24

TKE

ENGAGE™ Test Kit

Overview

The ENGAGE™ Test Kit (TKE) helps evaluate system design prior to installation of new ENGAGE wireless networked systems which utilize the ENGAGE GWE Gateway. The TKE can also be used to diagnose signal quality and signal strength in existing ENGAGE wireless applications.

ENGAGE Platform locks and devices communicate via 2.4 GHz Bluetooth® Low Energy (BLE) to the ENGAGE Gateway which is required for communication between ENGAGE devices and the access control panel for networked, real-time solutions using one of our integrated PACS providers.

The ENGAGE Test Kit transponder is used to communicate to the ENGAGE Gateway as an access control module. By using the ENGAGE mobile app to conduct the survey it is possible to obtain clear and comprehensive results during the survey. LED lights and numerical data provide intuitive feedback about the quality and strength of the 2.4 GHz Bluetooth Low Energy (BLE) signal[1]. By obtaining feedback on two different data points in the same test it makes it easier to identify issues and optimize placement of the Gateway.

The communication range of ENGAGE Platform devices to the gateway is up to 30 feet with normal building construction. The TKE can be used to determine the proper location of each Gateway to optimize system design. When installed properly, an ENGAGE wireless solution is an extremely reliable and cost-effective alternative to a hardwired networked system.

Features & Benefits

- Allows testing of 2.4 GHz Bluetooth Low Energy (BLE) signals between ENGAGE Platform devices and ENGAGE Gateway[1]
- Assists in accurate system design and quoting process
- Ensures proper location of gateways for efficient system installation
- Can be used to test existing installations for signal quality and strength
- Numerical and color indication of signal strength and quality; green for strong connection, red for weak connection
- For use with Schlage Control®, NDE, and LE wireless locks, Schlage CTE single door controller, and Von Duprin® exit devices with the RU/RM option
- Power supply, rechargeable battery and tripod included in kit for on-site convenience

CYBERSECURITY
Learn about Allegion's commitment

ENGAGE Test Kit Transponder Specifications	
Frequency	2.4 GHz Bluetooth® Low Energy (BLE) version 4.0
Communication range	Up to 30 ft with obstructions (normal building)
Operating temperature	32° to 120°F (0° to 49°C)
Battery type	4AA alkaline batteries
Dimensions (H x W x D) (excluding wire fastener)	7.20" x 3.59" x 2.80" (18.29 cm x 9.12 cm x 7.11 cm)
Certifications	• FCC Part 15 • Industry Canada (IC) • RoHS

ENGAGE GWE Gateway Specifications	
Frequency	2.4 GHz Bluetooth Low Energy (BLE) version 4.0
Communication range	Up to 30 ft with obstructions (normal building)
LED user interface	Power on, linking status, connection to mobile device
Operating tempurature	32° to 120°F (0° to 49°C)
Power	12 VDC or 24 VDC (12 VDC power supply and rechargeable lithium battery included)
Dimensions (H x W x D)	5.1" x 6.0" x 1.2" (13.0 cm x 15.3 cm x 3.04 cm)
Weight	8.6 oz (.24 kg)
Certifications	• UL 294 • FCC Part 15 • Industry Canada (IC) • RoHS

ENGAGE Test Kit Contains:

- ENGAGE GWE Gateway and mounting bracket
- Two ENGAGE transponders
- 12 VDC power supply
- Rechargeable battery
- Quick start guides
- 9 foot tripod
- Backpack

Allegion, the Allegion logo, ENGAGE, Schlage and Von Duprin are trademarks of Allegion plc, its subsidiaries and/or affiliates in the United States and other countries. All other trademarks are the property of their respective owners.

© 2024 Allegion plc
013210, Rev. 01/24

ENGAGE™

Mobile App for Device Commissioning

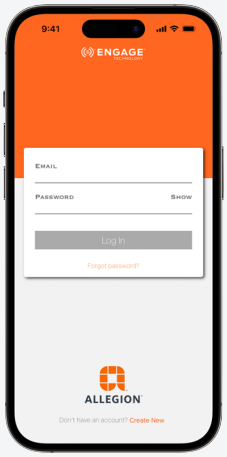

Overview

The ENGAGE™ mobile app is used to commission and connect devices to industry leading physical access control software (PACS) or multifamily proptech systems. This also includes support for the following products:

- Schlage Control®, NDE, LE and XE360™ electronic locks
- MTB readers
- CTE and RC controllers
- ENGAGE Gateway (GWE)
- ENGAGE Test Kit (TKE)
- Von Duprin® Remote Undogging (RU) and Remote Monitoring (RM)

Please visit us.allegion.com/alliances for specific support and capabilities by provider.

The free mobile app is required to initialize Schlage and Von Duprin devices that are on ENGAGE Platform and is available for Apple and Android smart devices.

Download on the App Store

GET IT ON Google Play

Features & Benefits

- Wirelessly add, configure or update locks at the door via mobile app using Bluetooth® enabled smart phone
- Can be used for other tasks including device firmware updates, hardware diagnostics and device audits
- Works with latest models of Apple and Android phones (see specific device requirements)
- Intuitive user interface simplifies the commissioning process

CYBERSECURITY
Learn about Allegion's commitment

This page intentionally left blank.

Allegion, the Allegion logo, Schlage and the Schlage logo are trademarks of Allegion plc, its subsidiaries and/or affiliates in the United States and other countries. All other trademarks are the property of their respective owners.

© 2024 Allegion plc
015657, Rev. 08/24

ENGAGE™

Cloud-Based Web & Mobile Applications

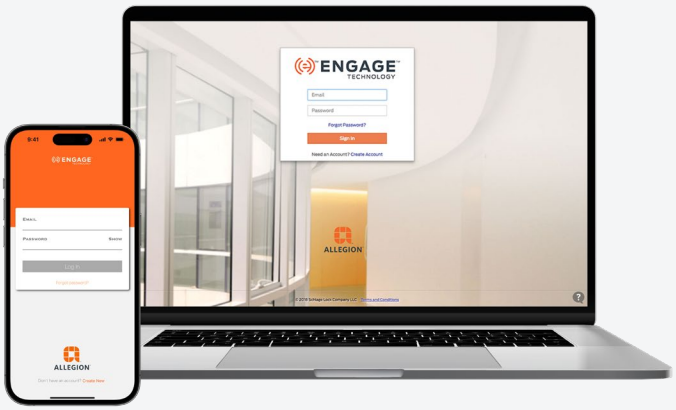

Overview

ENGAGE™ cloud-based web and mobile applications simplify the ability to connect people, openings and access management to deliver cost effective intelligence and efficiency to any facility.

With the ENGAGE cloud-based web and mobile apps, it's easy to configure settings, manage users, assign access privileges and view audits and alerts from anywhere. Updates to configuration and access privileges can be sent at the device with the ENGAGE mobile app. Or, to send updates without visiting the lock, leverage the existing Wi-Fi® network[1] or built-in No-Tour capability[2].

Daily schedule management of an opening is available with Von Duprin® remote undogging (RU) using ENGAGE software via Wi-Fi. This solution is available for scheduled lock-up events only, see the RU/RM data sheet for complete details.

The ENGAGE web app has the capability to issue and manage the Schlage Mobile Bluetooth® credential - giving users the security and convenience of using their mobile device to gain access to ENGAGE managed openings. Other capabilities of ENGAGE include audit filtering, lock schedules, user schedules, and holidays. Please see page 4 for a complete listing of capabilities.

The ENGAGE mobile app is also used to commission[4] and connect the following products to physical access control software (PACS) systems:

- Schlage Control®, NDE, LE and XE360™ electronic locks
- MTB readers
- CTE and RC controllers
- ENGAGE Test Kit (TKE)
- Von Duprin® Remote Undogging (RU) and Remote Monitoring (RM)

Please visit us.allegion.com/alliances for specific support and capabilities by provider.

Features & Benefits[3]

- Convenient—manage from anywhere
- Configure lock and device settings
- Add new users and enroll credentials
- Assign credential type including master, normal, toggle, freeze, pass through, blocked and lockdown
- Manage users and assign access privileges
- Unique web and mobile app capabilities:
  - **ENGAGE™ web app**
    - Create and assign lock/device schedules, user schedules and holidays
    - View and export audits
    - Schedule lock/device firmware updates[1]
    - Issue Schlage Mobile Bluetooth® Credentials
  - **ENGAGE™ mobile app**
    - Add new locks or devices
    - Assign lock/device schedules, user schedules and holidays
    - View audits
    - Send updates wirelessly at the lock or device

1. Applies to NDE, LE and CTE with built-in Wi-Fi.
2. Applies to Schlage Control®, NDE, LE, XE360 and CTE.
3. Features and benefits specific to ENGAGE web and mobile apps for basic access control. Please refer to the Von Duprin RU/RM data sheet for specific details about remote undogging solution.
4. Please see the ENGAGE™ Mobile App for Device Commissioning data sheet for more information.

CYBERSECURITY
Learn about Allegion's commitment

ENGAGE Mobile Application for Device Commissioning

The ENGAGE mobile app is also used to commission[4] and connect the following products to ENGAGE or third party physical access control software (PACS) systems. Additionally, the app is used to update device firmware and perform device diagnostics.

- Schlage Control®, NDE, LE and XE360™ electronic locks
- MTB readers
- CTE and RC controllers
- ENGAGE Test Kit (TKE)
- Von Duprin® Remote Undogging (RU) and Remote Monitoring (RM)

Please visit us.allegion.com/alliances for specific support and capabilities by provider. Also note that the details on pages 3 and 4 of this data sheet are not applicable to PACS managed solutions.

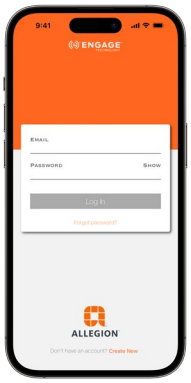

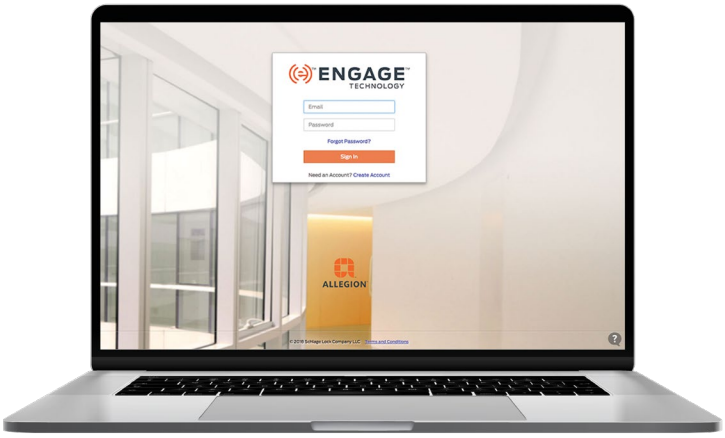

ENGAGE Cloud-Based Access Control

The ENGAGE cloud-based web and mobile applications deliver simple and convenient site set-up as well as the ability to manage users, assign access privileges and view audits and alerts from anywhere.

Technology Recommendations

iOS, Android™, and web browser specifications are available on the ENGAGE web and mobile apps page on commercial.schlage.com.

Download on the App Store

GET IT ON Google Play

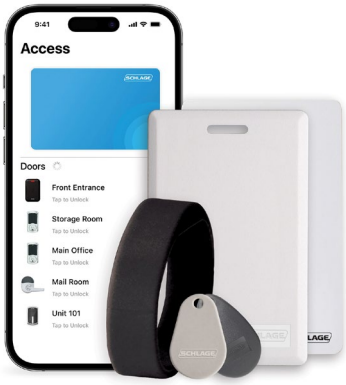

Electronic Credentials

Eliminate the time and costs associated with managing keys or re-keying locks by upgrading to electronic credentials. Provide a unique credential to authorized users that can be:

- Tracked for usage
- Added and revoked remotely
- Assigned to be valid during specific days and times
- Deleted and replaced if lost or stolen – without having to re-key the lock

Supported Credentials

Mobile credentials (BLE 2.4 GHz):

- Schlage® Mobile Bluetooth® credential

Schlage MIFARE credentials (13.56 MHz):

- Schlage MIFARE Classic®
- Schlage MIFARE Plus®
- Schlage MIFARE® DESFire®

Smart credentials (13.56 MHz) - card serial number only:

- HID iClass® and iClass SE®
- MIFARE Classic®
- MIFARE Plus®
- MIFARE® DESFire®

Proximity credentials (125 kHz):

- Schlage®
- AWID®
- GE/CASI®
- HID®

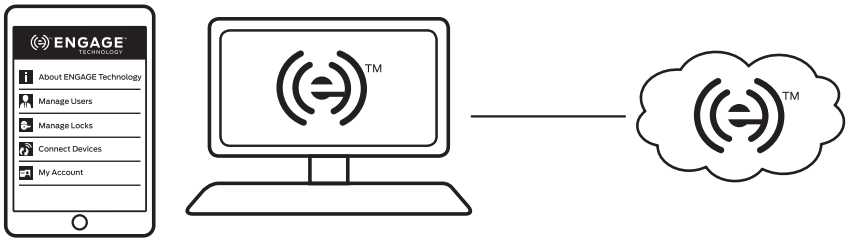

Manage Access

Manage your site from anywhere with ENGAGE cloud-based web and mobile applications.

- Configure lock/device settings
- Add new users and enroll credentials
- Manage users and assign access privileges
- Set lock/device schedules, holidays, user schedules
- View and export audits and alerts
- Invite others to assist with administration

Update Locks & Devices

Send updates wirelessly at the lock with the ENGAGE mobile application on a Bluetooth® enabled smart phone, tablet, or leverage the existing Wi-Fi® network or built-in No-Tour capability to send updates without visiting the lock or device.

- Update access rights
- Update lock/device settings
- Update firmware
- Perform diagnostics

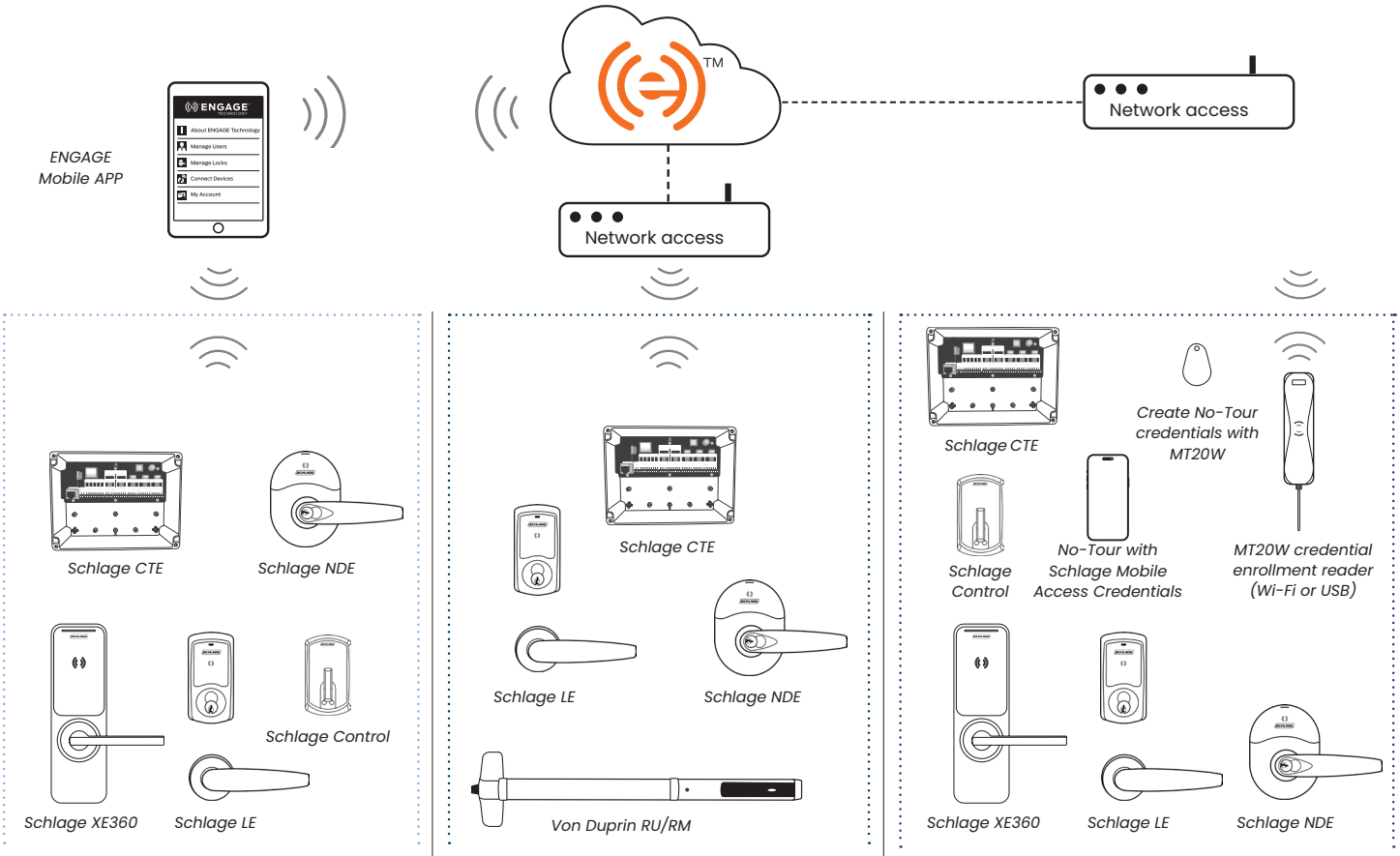

Immediate updates

Send updates at the lock/device, anytime, with the ENGAGE mobile app. Available on Schlage Control smart locks, NDE, LE and XE360 wireless locks, and CTE.

Automatic daily updates[1]

Connect devices to the Wi-Fi network for automatic daily updates. Available on Schlage NDE and LE wireless locks, and CTE as well as Von Duprin RU/RM.

No-Tour via smart credentials

Eliminate the need to visit locks/devices by using 13.56 MHz smart or Schlage Mobile Credentials to deliver updates to access rights. Available on Schlage Control, NDE, LE and XE360 wireless locks, and CTE.

1. Refer to the Von Duprin RU/RM data sheet for specific details and support about remote undogging solution.

System Capabilities

	Wireless offline security solution with ENGAGE technology				
	Schlage NDE cylindrical	**Schlage LE mortise**	**Schlage XE360**	**Schlage Control smart deadbolt / interconnected**	**CTE single door controller with MTB reader**
System Features					
Maximum number of locks/devices	NDE, LE and CTE = up to 100; XE360 = up to 250; Control = up to 500				
Maximum number of users[1]	NDE, LE and CTE = up to 5,000; XE360 = up to 2,000; Control = up to 500				
Maximum number of audits	Up to 100,000[2]				
Maximum number of lock/device schedules	Up to 16[3]				
Maximum number of holidays	Up to 32[3]				
Maximum number of user schedules	Up to 16				
Update Capability					
Bluetooth®[4]	Yes	Yes	Yes	Yes	Yes
Wi-Fi[5]	Yes	Yes	No	No	Yes
Lock Functions					
Storeroom	Yes	Yes	Yes	N/A	N/A
Office	Yes[8]	Yes	Yes	N/A	N/A
Privacy	Yes[8]	Yes	Yes	N/A	N/A
Apartment	Yes[8]	Yes	Yes	Yes	N/A
Status Monitors					
Interior cover tamper	Yes	Yes	No	Yes	Yes[6]
Request to exit	Yes	Yes	Yes	N/A	Yes
Deadbolt position status	N/A	Yes	No	No	N/A
Interior pushbutton status	N/A	Yes	Yes	N/A	N/A
Forced door	Yes	Yes	N/A	N/A	Yes
Propped door	Yes	Yes	N/A	N/A	Yes
Magnetic tamper	Yes	Yes	No	N/A	N/A
Battery status (normal, low, critical)	Yes	Yes	Yes	Yes	N/A
Battery voltage level	Yes	Yes	Yes	Yes	N/A
Credentials					
2.4 GHz Bluetooth Mobile (Schlage)	Yes[7]	Yes[7]	Yes[7]	Yes[7]	Yes[7]
13.56 MHz Smart	Yes	Yes	Yes	Yes	Yes
125 kHz Prox	Yes	Yes	No	No	Yes
Near Field Communication (NFC)	Yes	Yes	Yes	Yes	Yes
Credential Attributes					
Normal credential	Yes	Yes	Yes	Yes	Yes
Toggle credential	Yes	Yes	Yes	N/A	Yes
Pass through credential	Yes	Yes	Yes	Yes	Yes
Visitor/one-time use credential	Yes	Yes	Yes	N/A	Yes
Freeze credential	Yes	Yes	Yes	Yes	Yes
Block credential	Yes	Yes	Yes	Yes	Yes

1. Maximum number of users for a site.
2. Audit capacity per lock for a site. NDE, LE and XE360 wireless locks and CTE are capable of storing up to 2,000 audits. Control is capable of storing a minimum of 1,000 audits.
3. Applies to NDE and LE wireless locks and CTE only.
4. Requires ENGAGE mobile application.
5. Requires available Wi-Fi network with internet connection. Update will occur within 24 hours as scheduled by ENGAGE host software.
6. Ability to monitor tamper on reader cover.
7. Requires use of mobile enabled models of locks and devices.
8. Applies to mobile enabled NDE wireless lock (NDEB).

Allegion, the Allegion logo, ENGAGE, the ENGAGE logo, Schlage and the Schlage logo and are trademarks of Allegion plc, its subsidiaries and/or affiliates in the United States and other countries. All other trademarks are the property of their respective owners.

© 2024 Allegion plc
011427, Rev. 10/24

XE360™ Series

Wireless Tubular Lock

Overview

Building upon the innovation and reliability of Schlage electronic locks, the XE360 Series is the next generation of wireless locks from this trusted brand. The sleek design offers customers a solution that looks as good as it performs – at an affordable price point.

XE360 currently works within No-Tour or offline access control systems. Credential support includes smart, Bluetooth and NFC mobile[1].

The open architecture design of the XE360 allows it to be managed by Allegion software or be integrated into popular physical access control and Proptech systems through our PACS Alliance program. This enables customers to choose what best fits their requirements now and transition to another solution at any time.

The XE360 Series is also available as mortise, mortise deadbolt or exit trim and suites with other Schlage families to provide a wide selection of attractive options to meet the requirements of nearly any opening.

Encryption Key & Credential Interoperability

- Hardware configured with our default encryption key or custom key developed by Schlage Custom Encryption Key Service (SCEKS) including NXP and NFC
- Schlage MIFARE® DESFire® and MIFARE Classic® credentials
- NFC mobile credentials in Apple Wallet® and Google Wallet™
- Schlage Mobile Bluetooth® Credential
- Other competitive credentials

Schlage Credential Services

- CardTrax™ credential format sequencing service offering industry standard formats
- Custom format development

Features & Benefits

- Next level design inside and out
- Credential support includes Schlage MIFARE®, Bluetooth® and NFC mobile[1]
- Available with LED indicator or interior push button LED with indicator
- Advanced encryption keeps data and communications safe
- Wireless configuration using connected smartphones or tablets
- No-Tour or offline system capability
- Ready for the future with the innovative FleX Module™ that allows for communication type, memory and encryption upgrades
- Exceeds Grade 2 testing for exceptional quality and reliability
- Open architecture – interoperable and simple for software alliances to integrate
- Works seamlessly with other Schlage wireless locks, including Schlage Control[2]
- Uniquely concealed key override standard on all locks

1. Dependent on access control software provider support of specific mobile credentials.
2. Check with your Proptech or PACS provider for specific support.

CYBERSECURITY
Learn about Allegion's commitment

Exterior

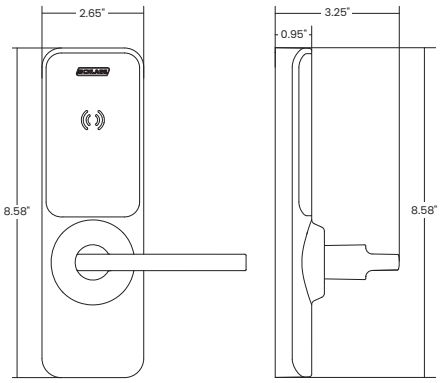

Interior

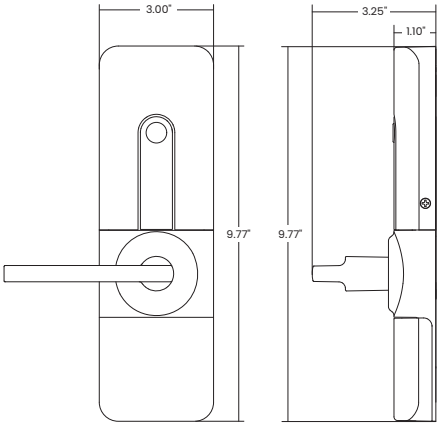

Profile

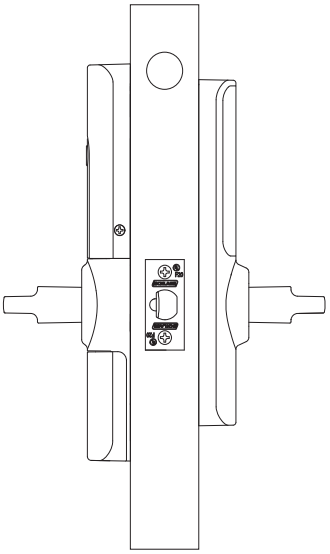

XE360 Wireless Electronic Lock Specifications	
Users	2,000[1]
Audits	2,000[1]
Visual communications	LED (red, amber, green, blue)
Audible communications	Yes, field configurable
Communication and encryption standards – lock	Bluetooth® Low Energy (version 5) Advanced Encryption Standard (AES), 128- and 256-bit
Communication and encryption standards – mobile credentials	Bluetooth® Low Energy: AES 256-bit using CBC & ECDSA 256
Credential verification time	Smart: ≤ 1 second Mobile: mobile device dependent
System interface	Via Bluetooth using the ENGAGE mobile app compatible with iOS and Android
Battery life[2]	Up to two 2 years 4 AA batteries, included
Operating temperature	Exterior: -31° to 151°F (-35° to 66°C) Interior: 32° to 120°F (0° to 49°C)
Operating humidity	0 - 100% non-condensing
Certifications	ANSI/BHMA A156.2-2022 Grade 2; ANSI/BHMA A156.25-2023 Locked Outdoor Type; ANSI/BHMA A156.5-2020; UL 294; ULC 60839; UL 10C 3-hour; CAN/ULC S104 3-hour; FCC Part 15; Industry Canada (IC); Industry Canada (IC)-RSS210; ADA Compliant[3]; RoHS; REACH; TAA; FL10356

Functionality[4]

- With Indicator (I)
  - Storeroom
- With Button (B)
  - Office
  - Privacy
  - Apartment

Note: Door Position Sensor is recommended for privacy and apartment functions.

Available Status Signals[4]

- Battery level
- Door position
- Lock/unlock
- Request-to-exit

Connectivity Options

- Mobile (Bluetooth at the lock)
- No-Tour[5]

1. Maximum storage capacity of lock; can vary by access control software.
2. Assuming default settings, 40 actuations per day.
3. See 'Lever Styles' section for available options.
4. Consult your access control software provider for specific scope of support.
5. With MT20W and smart credential or mobile credential (consult your access control software provider for specific support).

XE360 Tubular Mechanical Specifications	
Chassis	Tubular
Handing	On-site handing with included hex key
ANSI standard (Meets or exceeds)	ANSI/BHMA A156.02-2022 Grade 2 ANSI/BHMA A156.25-2023 Locked outdoor type ANSI/BHMA A156.5-2020
Door thickness	1-3/4" (44mm)
Backset	Standard: 2-3/4" (70mm), field adjustable to 2-3/8" (60mm)
Latchbolt	1" x 2-1/4" (25mm x 57mm); square and round corner faceplate; 1" (25mm) edge bore required
Levers	Zinc
Strike	Standard: 1-1/8" (29mm) lip, ANSI, 1-1/8" x 2-3/4" (29mm x 70mm), no box Optional: Additional strike lip lengths and ANSI strike box available
Stile width	Minimum 4-1/4" (108mm)
Materials	All-metal chassis and escutcheon; exterior polycarbonate elements
Cylinder and keys	Schlage Classic C keyway, Conventional 6-pin cylinder with two keys

Reader Specifications	
Credential technologies	Smart (13.56 MHz), Bluetooth Low Energy (LE) (2.4 GHz), and Near Field Communication (NFC)
Standards	ISO standard 15693 and ISO 14443
Read range	Smart: up to .5" Bluetooth® Low Energy: up to 15' NFC: mobile device dependent
Smart credential support	**Secure application area:** Schlage MIFARE DESFire® EV1/EV2/EV3, Schlage MIFARE® Classic® **CSN only:** HID iCLASS®, HID iCLASS SE®, MIFARE DESFire/Classic
Mobile credential support[1]	Schlage Mobile Bluetooth Credential, Integrated PACS mobile credential with Bluetooth, NFC mobile credentials in Apple Wallet® and Google Wallet™

1. Dependent on PACS provider capabilities. Visit us.allegion.com/alliances for more information.

Chassis Options

The XE360 Series portfolio offers tubular, mortise, mortise deadbolt and exit trim solutions to fit the needs of most applications.

Key Override

Key override is standard on all XE360 locks. The unique design conceals the cylinder in the bottom edge of the lock to preserve the sleek look on the door while still allowing emergency access using a key.

Ordering Information

XE360	- T	- OF	- I	- SM	- LAT	- 626	- P6	- C	- 47535555	- A500-074	- 134	- 47467230
Series	Chassis	Class	Function	Reader	Lever Style	Finish	Key Cylinder	Keyway	Backset & Latch	Strike	Door Thickness	Accessories
1	2	3	4	5	6	7	8	9	10	11	12	13

Selections correspond with the numbers above. See price book for specific configuration options.

4 Function	
I	Indicator
B	Button

5 Reader	
SM	Smart; Bluetooth and NFC mobile

6 Lever Style	
BRW	Broadway
LAT	Latitude
NEP	Neptune
LON-E	Longitude-extended length

7 Finish	
619	Satin Nickel
622	Matte Black
626	Satin Chrome

8 Key Cylinder	
P6	Schlage Conventional, 6-pin

9 Keyway	
C	Schlage Classic Obverse

10 Backset & Latch	
47535555	Adjustable backset: 2-3/8" or 2-3/4"; 1" x 2-1/4" (round and square corner included); 1" edge bore required

11 Strike	
A500-074	Standard: 1-1/8" lip, ANSI, 1-1/8" x 2-3/4", no box

See price book for additional strike lip lengths and ANSI strike box options.

12 Door Thickness	
134	1-3/4" only

13 Accessories	
47467230	Door Position Switch (DPS)
LLLDPS	Less Door Position Switch (DPS)

Lever Styles

Broadway

Latitude

Neptune (Sparta)

Longitude - Extended Length

Extended length lever is designed to lower required operational force and improve rotational grip for higher accessibility.

Finishes

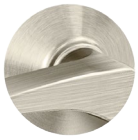

619
Satin Nickel

622
Matte Black

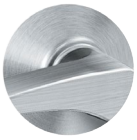

626
Satin Chrome

Allegion, the Allegion logo, Schlage and the Schlage logo are trademarks of Allegion plc, its subsidiaries and/or affiliates in the United States and other countries. The HID, iCLASS, and iCLASS SE trademarks owned by ASSA ABLOY. MIFARE and DESFire are registered trademarks of NXP B.V. All other trademarks are the property of their respective owners.

© 2024 Allegion plc
015588, Rev. 10/24

XE360™ Series

Wireless Mortise Lock

Overview

Building upon the innovation and reliability of Schlage electronic locks, the XE360 Series is the next generation of wireless locks from this trusted brand. The sleek design offers customers a solution that looks as good as it performs – at an affordable price point.

XE360 currently works within No-Tour or offline access control systems. Credential support includes smart, Bluetooth and NFC mobile[1].

The open architecture design of the XE360 allows it to be managed by Allegion software or be integrated into popular physical access control and Proptech systems through our PACS Alliance program. This enables customers to choose what best fits their requirements now and transition to another solution at any time.

The XE360 Series is also available as tubular or exit trim and suites with other Schlage families to provide a wide selection of attractive options to meet the requirements of nearly any opening.

Encryption Key & Credential Interoperability

- Hardware configured with our default encryption key or custom key developed by Schlage Custom Encryption Key Service (SCEKS) including NXP and NFC
- Schlage MIFARE® DESFire® and MIFARE Classic® credentials
- NFC mobile credentials in Apple Wallet® and Google Wallet™
- Schlage Mobile Bluetooth® Credential
- Other competitive credentials

Schlage Credential Services

- CardTrax™ credential format sequencing service offering industry standard formats
- Custom format development

Features & Benefits

- Next level design inside and out
- Credential support includes Schlage MIFARE®, Bluetooth® and NFC mobile[1]
- Available with LED indicator, interior push button, or deadbolt with thumbturn
- Advanced encryption keeps data and communications safe
- Wireless configuration using connected smartphones or tablets
- No-Tour or offline system capability
- Ready for the future with the innovative FleX Module™ that allows for communication type, memory and encryption upgrades
- Utilizes a heavy-duty Grade 1 mortise chassis for exceptional quality and reliability
- Open architecture – interoperable and simple for software alliances to integrate
- Works seamlessly with other Schlage wireless locks, including Schlage Control[2]
- Uniquely concealed key override standard on all locks

1. Dependent on access control software provider support of specific mobile credentials.
2. Check with your Proptech or PACS provider for specific support.

CYBERSECURITY
Learn about Allegion's commitment

Exterior

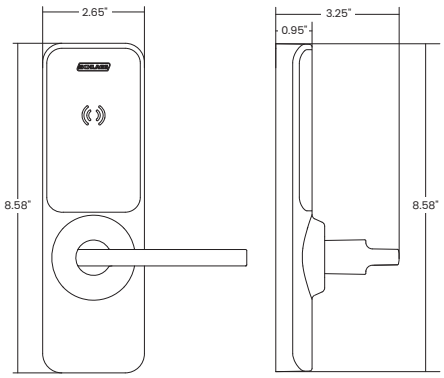

Interior

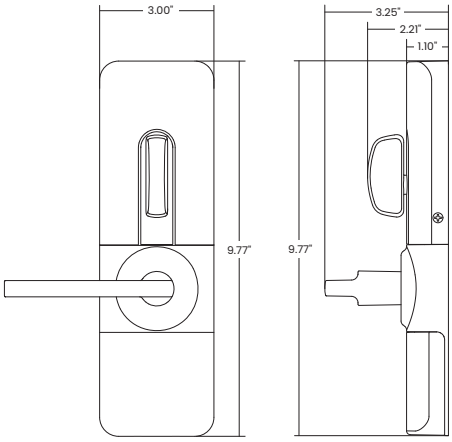

Profile

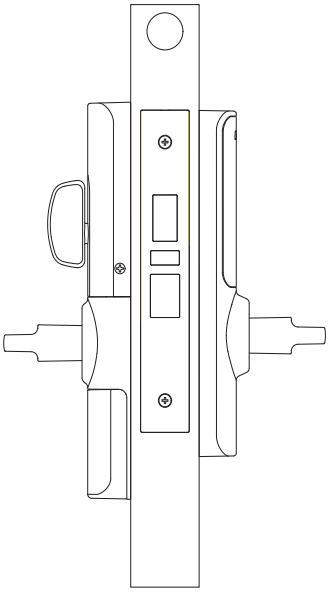

XE360 Wireless Electronic Lock Specifications	
Users	2,000[1]
Audits	2,000[1]
Visual communications	LED (red, amber, green, blue)
Audible communications	Yes, field configurable
Communication and encryption standards – lock	Bluetooth® Low Energy (version 5) Advanced Encryption Standard (AES), 128- and 256-bit
Communication and encryption standards – mobile credentials	Bluetooth® Low Energy: AES 256-bit using CBC & ECDSA 256
Credential verification time	Smart: ≤ 1 second Mobile: mobile device dependent
System interface	Via Bluetooth using the ENGAGE mobile app compatible with iOS and Android
Battery life[2]	Up to two 2 years 4 AA batteries, included
Operating temperature	Exterior: -31° to 151°F (-35° to 66°C) Interior: 32° to 120°F (0° to 49°C)
Operating humidity	0 - 100% non-condensing
Certifications	ANSI/BHMA A156.13-2022; ANSI/BHMA A156.25-2023 Locked Outdoor Type; ANSI/BHMA A156.5-2020; UL 294; ULC 60839; UL 10C 3-hour; CAN/ULC S104 3-hour; FCC Part 15; Industry Canada (IC); Industry Canada (IC)-RSS210; ADA Compliant[3]; RoHS; REACH; TAA; FL12400; FL4613; FL1592; FL14482; FL10356; FL3905[4]

Functionality[5]

- With Indicator (I)
  - Storeroom
- With Button (B)
  - Office
  - Privacy
  - Apartment
- With Deadbolt (D)
  - Privacy
  - Apartment

Note: Door Position Sensor is recommended for privacy and apartment functions.

Available Status Signals[5]

- Battery level
- Door position
- Lock/unlock
- Request-to-exit
- Mortise deadbolt[4]

Connectivity Options

- Mobile (Bluetooth at the lock)
- No-Tour[6]

1. Maximum storage capacity of lock; can vary by access control software.
2. Assuming default settings, 40 actuations per day.
3. See 'Lever Styles' section for available options.
4. Mortise deadbolt (D) chassis only.
5. Consult your access control software provider for specific scope of support.
6. With MT20W and smart credential or mobile credential (consult your access control software provider for specific support).

XE360 Mortise Mechanical Specifications	
Chassis	Mortise
Handing	On-site handing with included hex key
ANSI standard (Meets or exceeds)	ANSI/BHMA A156.13-2022 ANSI/BHMA A156.25-2023 Locked outdoor type ANSI/BHMA A156.5-2020
Door thickness	1-3/4" (44mm)
Backset	2-3/4" (70mm)
Latchbolt	Standard: 3/4" (19mm) throw stainless steel latch bolt with anti-friction tongue
Deadbolt	1" (25mm) throw, stainless steel
Armored front	1-1/4" x 8" x 7/32" (32mm x 203mm x 6mm) only
Strike	Standard: 1-3/16" (30mm) curved lip, ANSI, 1-1/4" x 4-7/8" (32mm x 124mm); no box Optional: Additional strike lip lengths and ANSI strike box available
Levers	Zinc
Stile width	Minimum 4-1/2" (114mm)
Materials	All-metal chassis and escutcheon; exterior polycarbonate elements
Cylinder and keys	Schlage Classic C keyway, Conventional 6-pin cylinder with two keys

Reader Specifications	
Credential technologies	Smart (13.56 MHz), Bluetooth Low Energy (LE) (2.4 GHz), and Near Field Communication (NFC)
Standards	ISO standard 15693 and ISO 14443
Read range	Smart: up to .5" Bluetooth® Low Energy: up to 15' NFC: mobile device dependent
Smart credential support	**Secure application area:** Schlage MIFARE DESFire® EV1/EV2/EV3, Schlage MIFARE® Classic® **CSN only:** HID iCLASS®, HID iCLASS SE®, MIFARE DESFire/Classic
Mobile credential support[1]	Schlage Mobile Bluetooth Credential, Integrated PACS mobile credential with Bluetooth, NFC mobile credentials in Apple Wallet® and Google Wallet™

1. Dependent on PACS provider capabilities. Visit us.allegion.com/alliances for more information.

Chassis Options

The XE360 Series portfolio offers tubular, mortise, mortise deadbolt and exit trim solutions to fit the needs of most applications.

Key Override

Key override is standard on all XE360 locks. The unique design conceals the cylinder in the bottom edge of the lock to preserve the sleek look on the door while still allowing emergency access using a key.

Ordering Information

XE360	- M	- OF	- I	- SM	- LAT	- 626	- P6	- C	- 09-663	- 10-072	- 134	- 47467230
Series	Chassis	Class	Function	Reader	Lever Style	Finish	Key Cylinder	Keyway	Armored Front	Strike	Door Thickness	Accessories
1	2	3	4	5	6	7	8	9	10	11	12	13

Selections correspond with the numbers above. See price book for specific configuration options.

4 Function	
I	Indicator
B	Button
D	Deadbolt

5 Reader	
SM	Smart; Bluetooth and NFC mobile

6 Lever Style	
BRW	Broadway
LAT	Latitude
NEP	Neptune
LON-E	Longitude-extended length

7 Finish	
619	Satin Nickel
622	Matte Black
626	Satin Chrome

8 Key Cylinder	
P6	Schlage Conventional, 6-pin

9 Keyway	
C	Schlage Classic Obverse

10 Armored Front	
	1-1/4" x 8" x 7/32"
09-663	For indicator and button
09-666	For deadbolt

11 Strike	
10-072	1-3/16" curved lip, ANSI, 1-1/4" x 4-7/8"; no box

See price book for additional strike lip lengths and ANSI strike box options.

12 Door Thickness	
134	1-3/4" only

13 Accessories	
47467230	Door Position Switch (DPS)
LLLDPS	Less Door Position Switch (DPS)

Lever Styles

Broadway

Latitude

Neptune (Sparta)

Longitude - Extended Length

Extended length lever is designed to lower required operational force and improve rotational grip for higher accessibility.

Finishes

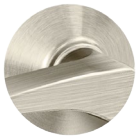

619
Satin Nickel

622
Matte Black

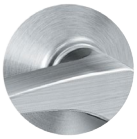

626
Satin Chrome

Allegion, the Allegion logo, Schlage and the Schlage logo are trademarks of Allegion plc, its subsidiaries and/or affiliates in the United States and other countries. The HID, iCLASS, and iCLASS SE trademarks owned by ASSA ABLOY. MIFARE and DESFire are registered trademarks of NXP B.V. All other trademarks are the property of their respective owners.

© 2024 Allegion plc
015589, Rev. 10/24

XE360™ Series

Wireless Exit Trim

Note: Exit device sold separately.

Overview

Building upon the innovation and reliability of Schlage electronic locks, the XE360 Series is the next generation of wireless locks from this trusted brand. The wireless exit trim is compatible with rim and surface vertical rod exit devices from Falcon and Von Duprin, and suites flawlessly with the XE360 tubular and mortise chassis to ensure an aesthetically consistent property.

XE360 currently works within No-Tour or offline access control systems. Credential support includes smart, Bluetooth and NFC mobile[1].

The open architecture design of the XE360 allows it to be managed by Allegion software or be integrated into popular physical access control and Proptech systems through our PACS Alliance program. This enables customers to choose what best fits their requirements now and transition to another solution at any time.

Encryption Key & Credential Interoperability

- Hardware configured with our default encryption key or custom key developed by Schlage Custom Encryption Key Service (SCEKS) including NXP and NFC
- Schlage MIFARE® DESFire® and MIFARE Classic® credentials
- NFC mobile credentials in Apple Wallet® and Google Wallet™
- Schlage Mobile Bluetooth® Credential
- Other competitive credentials

Schlage Credential Services

- CardTrax™ credential format sequencing service offering industry standard formats
- Custom format development

Features & Benefits

- Next level design inside and out
- Available for rim and surface vertical rod exit devices from Falcon and Von Duprin
- Utilizes a modular adapter for simple transitions to a wide variety of exit devices
- Credential support includes Schlage MIFARE®, Bluetooth® and NFC mobile[1]
- Advanced encryption keeps data and communications safe
- Wireless configuration from connected smartphones and tablets
- No-Tour or offline system capability
- Ready for the future with the innovative FleX Module™ that allows for communication type, memory and encryption upgrades
- Exceeds Grade 1 testing for exceptional quality and reliability
- Open architecture – interoperable and simple for software alliances to integrate
- Works seamlessly with other Schlage wireless locks, including Schlage Control[2]
- Uniquely concealed key override standard on all locks

1. Dependent on access control software provider support of specific mobile credentials.
2. Check with your Proptech or PACS provider for specific support.

CYBERSECURITY
Learn about Allegion's commitment

Exterior

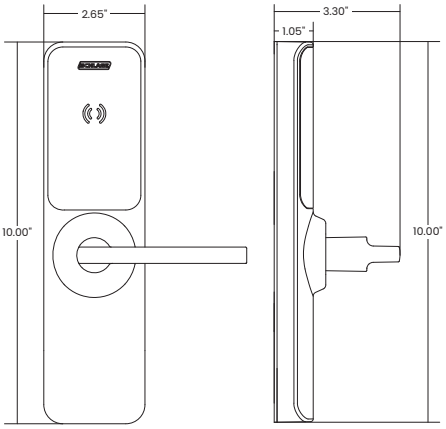

Interior

Rim

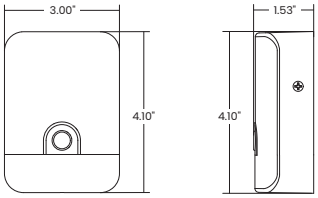

Surface vertical rod (SVR)

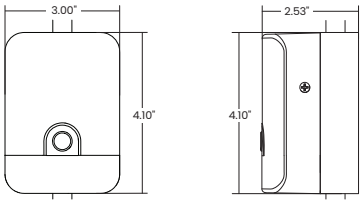

Profile - with Falcon 25 Rim

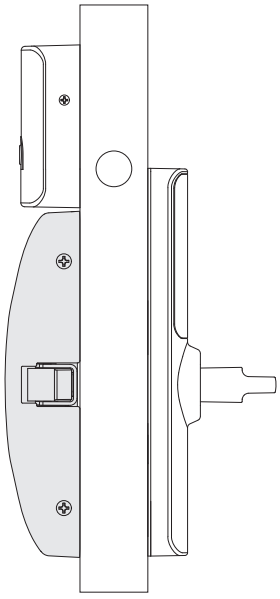

XE360 Wireless Electronic Lock Specifications	
Users	2,000[1]
Audits	2,000[1]
Visual communications	LED (red, amber, green, blue)
Audible communications	Yes, field configurable
Communication and encryption standards – lock	Bluetooth® Low Energy (version 5) Advanced Encryption Standard (AES), 128- and 256-bit
Communication and encryption standards – mobile credentials	Bluetooth® Low Energy: AES 256-bit using CBC & ECDSA 256
Credential verification time	Smart: ≤ 1 second Mobile: mobile device dependent
System interface	Via Bluetooth using the ENGAGE mobile app compatible with iOS and Android
Battery life[2]	Up to two 2 years 4 AA batteries, included
Operating temperature	Exterior: -31° to 151°F (-35° to 66°C) Interior: 32° to 120°F (0° to 49°C)
Operating humidity	0 - 100% non-condensing
Certifications	ANSI/BHMA A156.3-2020 Grade 1; ANSI/BHMA A156.25-2023 Locked Outdoor Type; ANSI/BHMA A156.5-2020; UL 294; ULC 60839; UL 10C 3-hour; CAN/ULC S104 3-hour; FCC Part 15; Industry Canada (IC); Industry Canada (IC)-RSS210; ADA Compliant[3]; RoHS; REACH; TAA

Functionality[4]

- With Indicator (I)
  - Storeroom
- With Button (B)
  - Office
  - Privacy
  - Apartment

Note: Door Position Sensor is recommended for privacy and apartment functions.

Available Status Signals[4]

- Battery level
- Door position
- Lock/unlock
- Request-to-exit[5]

Connectivity Options

- Mobile (Bluetooth at the lock)
- No-Tour[6]

1. Maximum storage capacity of lock; can vary by access control software.
2. Assuming default settings, 40 actuations per day.
3. See 'Lever Styles' section for available options.
4. Consult your access control software provider for specific scope of support.
5. Exit compatibility - supports both Low Current (RX-LC) and Normal versions (RX) of REX switch.
6. With MT20W and smart credential or mobile credential (consult your access control software provider for specific support).

XE360 Exit Trim Mechanical Specifications	
Chassis	Exit trim, wide stile
Handing	On-site handing with included hex key
ANSI standard (Meets or exceeds)	ANSI/BHMA A156.13-2020 Grade 1 ANSI/BHMA A156.25-2023 Locked outdoor type ANSI/BHMA A156.5-2020
Door thickness	1-3/4" (44mm)
Backset	Defined by exit device
Latchbolt	Defined by exit device
Strike	Defined by exit device
Levers	Zinc
Stile width	Minimum 4-1/4" (108mm)
Materials	All-metal chassis and escutcheon; exterior polycarbonate elements
Cylinder and keys	Schlage Classic C keyway, Conventional 6-pin cylinder with two keys

Reader Specifications	
Credential technologies	Smart (13.56 MHz), Bluetooth Low Energy (LE) (2.4 GHz), and Near Field Communication (NFC)
Standards	ISO standard 15693 and ISO 14443
Read range	Smart: up to .5" Bluetooth® Low Energy: up to 15' NFC: mobile device dependent
Smart credential support	**Secure application area:** Schlage MIFARE DESFire® EV1/EV2/EV3, Schlage MIFARE® Classic® **CSN only:** HID iCLASS®, HID iCLASS SE®, MIFARE DESFire/Classic
Mobile credential support[1]	Schlage Mobile Bluetooth Credential, Integrated PACS mobile credential with Bluetooth, Apple Wallet® NFC student ID and employee badge; Google Wallet™ NFC student ID and employee badge

1. Dependent on PACS provider capabilities. Visit us.allegion.com/alliances for more information.

Exit Device Compatibility

The XE360 exit trim is currently compatible with rim and surface vertical rod styles of the following exit devices:

- Falcon 25
- Von Duprin 98/99; XP98/99 rim
- Von Duprin 22

Chassis Options

The XE360 Series portfolio offers tubular, mortise, mortise deadbolt and exit trim solutions to fit the needs of most applications.

Key Override

Key override is standard on all XE360 locks. The unique design conceals the cylinder in the bottom edge of the lock to preserve the sleek look on the door while still allowing emergency access using a key.

Ordering Information

XE360	- EW	- 25R	- OF	- I	- SM	- LAT	- 626	- P6	- C	- 134	- 47467230
Series	Chassis	Exit Trim Adapter	Class	Function	Reader	Lever Style	Finish	Key Cylinder	Keyway	Door Thickness	Accessories
1	2	3	4	5	6	7	8	9	10	11	12

Selections correspond with the numbers above. See price book for specific configuration options.

3 Exit Trim Adapter	
25R	Falcon 25 rim
25S	Falcon 25 surface vertical rod
99R	Von Duprin 98/99 or XP98/99 Rim
99S	Von Duprin 98/99 surface vertical rod
22R	Von Duprin 22 rim
22S	Von Duprin 22 surface vertical rod

5 Function	
I	Indicator
B	Button

6 Reader	
SM	Smart; Bluetooth and NFC mobile

7 Lever Style	
BRW	Broadway
LAT	Latitude
NEP	Neptune
LON-E	Longitude-extended length

8 Finish	
619	Satin Nickel
622	Matte Black
626	Satin Chrome

Note: Interior finish of Exit Trim device will always be 622 Matte Black.

9 Key Cylinder	
P6	Schlage Conventional, 6-pin

10 Keyway	
C	Schlage Classic Obverse

11 Door Thickness	
134	1-3/4" only

12 Accessories	
47467230	Door Position Switch (DPS)
LLLDPS	Less Door Position Switch (DPS)

Lever Styles

Broadway

Latitude

Neptune (Sparta)

Longitude - Extended Length

Extended length lever is designed to lower required operational force and improve rotational grip for higher accessibility.

Finishes

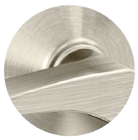

619
Satin Nickel

622
Matte Black

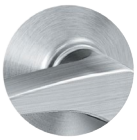

626
Satin Chrome

Allegion, the Allegion logo, Schlage and the Schlage logo are trademarks of Allegion plc, its subsidiaries and/or affiliates in the United States and other countries. The HID, iCLASS, and iCLASS SE trademarks owned by ASSA ABLOY. MIFARE and DESFire are registered trademarks of NXP B.V. All other trademarks are the property of their respective owners.

© 2024 Allegion plc
015590, Rev. 10/24

ALLEGION

Electromechanical Solutions

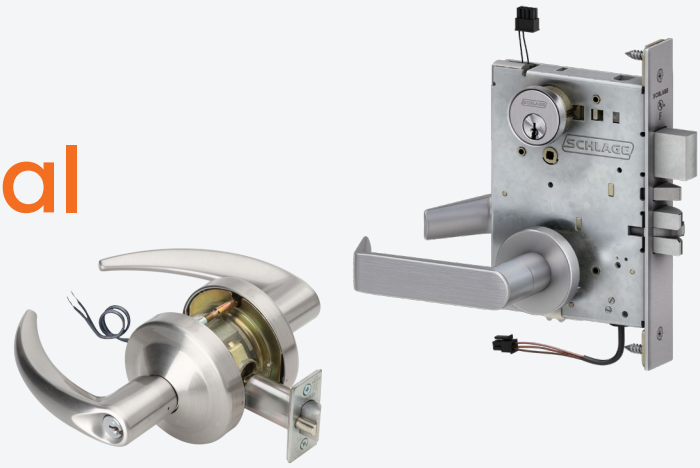

This section of the Electronic Access Control catalog covers LCN, Schlage, Von Duprin and Ives products which can be equipped with electronic features for added security and functionality.

Electrified Locks

Overview

An electromechanical lock is one of the most basic aspects of electronic access systems; however, they are as important as any other component of such a system. Mechanical security components must be able to stand up to constant wear and tear, and be durable enough to handle direct attack or abuse. Without such durability and integrity, a building's assets and people are at risk.

Features

The two primary Schlage commercial lock families are the L Series Grade 1 mortise lock and the ND Series Grade 1 cylindrical lock. Both the L and ND series are available in mechanical, wired electrified and wireless electronic configurations so that an entire project can be suited with a single lock family for a consistent look and feel. The features outlined below will focus on the wired electrified offerings of these two series.

Electrified Schlage L and ND locks have numerous advantages due to their use of motors instead of solenoids in their locking mechanisms. Both are highly-efficient, having a very low maximum current draw—which saves money by allowing more locks on a single power supply. They also have an extremely low holding current—only 10mA; which eliminates instances of "hot levers" often found in solenoid-based electrified locks. Motor driven locks are also inherently more quiet than the solenoid counterparts.

Flexibility is also enhanced with the wired electrified Schlage L and ND. A single lock can support 12 or 24V applications, and operating mode—electrically locking (fail safe) or electrically unlocking (fail secure)—can easily be selected with a switch on the chassis. Request-to-exit, a popular option used on many locks, can even be "plugged in" at a later time. Combined, this flexibility allows a single electrified L or electrified ND lock to replace 8 traditional electrified locks - thus ensuring the right lock is always available at the job site or on the work truck. Additional options and details are available on the following product-specific pages.

Benefits

Schlage L and ND Series grade 1 locks are best-in-class commercial locks offered in multiple electrified functions to fit the security needs and use applications of any building. They are supported by a wide range of Schlage reader and controller solutions to improve security and simplify integration into the building's access control system. Like other mechanical and electronic solutions, they are compatible with a broad offering of key systems and credentials to ensure appropriate access and security.

Exit Devices - Electrical Options

Overview

Exit devices are a critical part of a fire and life safety egress system and provide safe and reliable service when properly applied and maintained. Von Duprin's portfolio of exit device hardware features a variety of options that allow the device to be controlled electronically. When an electrical option is used, the exit device integrates into any access control system.

Features

There are a variety of electrical options that can be applied to a Von Duprin exit device. Electric latch retraction allows for the remote unlatching of exit devices. Monitoring switches, such as RX and LX, are used to signal the state of an opening. Delayed egress and alarmed exits, such as the Chexit and ALK exit, help to deter unauthorized use of certain openings. Von Duprin also offers a variety of electrified exit trims that work seamlessly with the exit device. For a complete view of the range of available Von Duprin electrical options, please see the Von Duprin exit device catalogs.

Benefits

Applying electrical features to your Von Duprin exit devices allows you to remotely control, monitor and delay or alarm latch retraction, while allowing safe and efficient egress.

Door Controls - Electrical Options

Overview

LCN has automatic operator solutions to meet the full array of ADA accessibility and door control needs, including low-energy pneumatic and electric designs. What's more, they utilize several patented components and are all assembled by hand in the United States. LCN's comprehensive portfolio of solutions help building owners bridge the gap between business objectives and ADA accessibility, without sacrificing other needs related to high use and abuse, design, fire and life safety and security.

Features

LCN electrohydraulic auto equalizer products can operate as normal rack and pinion door closers or, at the touch of a button, open automatically. An integrated digital control suite provides all electrical control functions. Two surface mount models are available; the 4630 Series mounts on the pull side of the door and the 4640 Series mounts on the push side of the door. LCN's electromechanical products are designed primarily for automatic opening applications that occasionally require manual opening. A control box provides all electrical functions. Surface mounted and overhead concealed mountings are available. LCN pneumatic auto equalizer systems use the power of pressurized air to do the work of automatically opening the door. A basic pneumatic system consists of an automatic operator to provide the door control, a control box that contains the valves and electrical timing circuits, actuators to start the system and a compressed air source.

Benefits

LCN automatic operator solutions have been the proven standard in schools and health care facilities for over 20 years and are designed to meet ADA regulations for accessible openings. They are easily retrofitted into existing doors and frames, as well as new construction.

© 2024 Allegion plc
005024, Rev. 01/24

L Series

Electrified Mortise Lock

Overview

Many of the most advanced electronic access systems still rely on the strength and functionality of the mechanical lock hardware on the door. L Series electrified mortise locks include Schlage's most diverse aesthetic options in a design built for performance, security and durability. It can be used as part of an integrated system or as a standalone solution with a buzzer or other device as the controller.

The L Series offers exceptional flexibility and power savings. The lock automatically adapts to 12V or 24V DC input, and a case-mounted switch allows selection between EL and EU operation. Request-to-exit is modular and can be added without opening the lock case. 0.4 amp maximum current draw (24V operating voltage) allows multiple units on a single power supply, while 0.1 amp holding current eliminates "hot levers" in EL applications.

Utilizing the same levers, trims and options as the mechanical Schlage L Series mortise, it suites seamlessly with the other L Series hardware which includes both purely mechanical and fully electronic solutions. And because it is based on the Schlage L mortise, it carries the same proven record of performance, strength and durability from the most trusted name in the industry.

Recommended Applications

The wired electrified L Series is ideal for new construction and high traffic areas where hardwired power ensures continuous operation and where electrified door prep, hinges and wiring can easily be incorporated into the building. The electrified L Series is regularly used as part of an access control system for high security areas, or independently in areas that require a remote access switch.

Features & Benefits

- Universal input voltage – accepts 12V or 24V DC for installation flexibility
- User selectable fail safe/fail secure through use of switch on lock case
- Low maximum current draw allows multiple locks on a single power supply
- Low holding current produces minimal heat, eliminating "hot levers" in electrically locking applications
- Modular design allows RX feature to be added at a later time without opening the lock case
- UL listed for 3-hour fire door
- Available with Vandlgard® lever engagement - ideal for areas subject to abuse or vandalism
- Extensive options for lever styles, finishes and functions
- Optional feature on two functions allows key override of the inside thumbturn when it is being held in the locked position to stop unwanted barricade situations

Available options:

- Request-to-Exit (RX)
- Latchbolt Monitor (LX)
- Door Position Sensor (DPS) - non-deadbolt functions only
- Deadbolt Monitor (DM) - standard, deadbolt functions only

L Series Mechanical Specifications	
Handing	Field reversible
Door thickness	1-3/4" (44 mm) standard, 1-3/8" (35 mm) to 2-1/2" (64 mm) optional. Over 2-1/2" (64 mm) door ranges vary by function. Specify door thickness greater than 1-3/4" and position in door EE, EI, EO, and ED.
Backset	2-3/4" (70 mm) only
Armor front	Standard: 1-1/4" x 8" x 7/32" (32 mm x 203 mm x 6 mm) Optional: 1-1/16" x 8" x 7/32" (27 mm x 203 mm x 6 mm)
Case size	4-7/16" x 6-1/16" x 1" (113 mm x 154 mm x 25 mm)
Spacing	Knob or lever to cylinder, 3-7/8" (98 mm); knob or lever to thumbturn hub, 2-11/16" (68 mm)
Bolts	1" (25 mm) throw stainless steel deadbolt and 3/4" (19 mm) throw stainless steel latch with anti-friction tongue
Cylinders and key systems	Standard: 6-pin, solid brass Conventional mortise cylinder in the patented Schlage Everest 29 S123 keyway; two nickel silver cut keys per lock Additional keying options available: Concealed mortise cylinder, FSIC, SFIC and 7-pin SL cylinder formats plus less cylinder options; master and grand master keying; compatible with competitor cylinders and cams that support the L9000 Series
Strike	ANSI curved lip strike 1-1/4" x 4-7/8" (32 mm x 124 mm) x 1-3/16" (30 mm) lip length with dust box standard
Trim	Five roses (sectional) and two escutcheons available
Levers	33 lever and two knob designs Ligature-resistant and hospital push/pull trim also available
Finishes	12 available; 626 and 630 finishes are also available with optional antimicrobial coating. High Security Ligature-Resistant trim (HSLR) is available in 630 satin stainless steel only on single cylinder keyed functions.

Vandlgard® Feature

The Vandlgard optional feature available on many functions allows the outside lever to rotate freely down when in a locked state. This limits the ability of vandals to apply excessive force to the lever helping to prevent damage to internal components.

L Series Electronic Specifications	
Voltage	Auto-detects 12/24V DC operation
Peak current	12V operating voltage: 1 amp 24V operating voltage: 0.4 amp
Holding current	0.1 amp
Operating temperature	Maximum +120°F (+49°C) Minimum -32°F (0°C)
Interfacing devices	Biometric devices, wall switches, security consoles, access card readers, thermo-sensitive devices, smoke and fire alarms, telephone access controls, automatic time devices and computerized controls
Micro switch electrical rating for request-to-exit (RX) function and latchbolt monitor (LX)	3 amps, 125V AC; 2 amps, 30V DC

L Series Electrified Functions	
No cylinder	L9090EL/EU electrically locking/unlocking outside lever L9091EL/EU electrically locking/unlocking both levers
Outside cylinder	L9092EL/EU electrically locking/unlocking outside lever L9093EL/EU Electrically locking/unlocking both levers
Inside and outside cylinder	L9095EL/EU electrically locking/unlocking both levers

L Series Electrified Deadbolt Functions	
Outside cylinder (Optional key override feature available)	L9492EL/EU electrically locking/unlocking outside lever; deadbolt with inside thumbturn L9493EL/EU electrically locking/unlocking both levers; deadbolt with inside thumbturn
Inside and outside cylinder	L9494EL/EU electrically locking/unlocking outside lever; deadbolt L9495EL/EU electrically locking/unlocking both levers; deadbolt

Note: See catalog for additional details.

Allegion, the Allegion logo, Schlage, and the Schlage logo are trademarks of Allegion plc, its subsidiaries and/or affiliates in the United States and other countries. All other trademarks are the property of their respective owners.

© 2024 Allegion plc

004998, Rev. 10/24

ND Series

Electrified Cylindrical Lock

Overview

Many of the most advanced electronic access control systems still rely on the strength and functionality of the mechanical lock hardware on the door. ND Series electrified locks feature Schlage's most robust cylindrical design built for performance, security and durability. It is a "beyond grade 1" lock in terms of strength and can be used as part of an integrated system or as a standalone solution with a buzzer or other device as the controller.

The Schlage ND cylindrical lock uses a motor instead of a solenoid to provide quiet operation and energy efficiency. The maximum current draw of 0.24 amp allows more locks to run off a single power supply. A low, 0.010 amp holding current eliminates any potential for hot levers in electrically locking applications or in electrically unlocking applications where the door is left open for long periods of time. ND Series can be quickly and easily installed and is compatible with various key systems for field adaptability. It suites seamlessly with the other ND Series hardware which includes both purely mechanical and fully electronic solutions.

When it comes to access control, mechanical components are just as important as their electronic counterparts. The Schlage ND Series provides versatility and easy installation to complete your access control system.

Recommended Applications

The wired electrified ND Series is ideal for new construction and high traffic areas where hardwired power ensures continuous operation and where electrified door prep, hinges and wiring can easily be incorporated into the building. The electrified ND Series is regularly used as part of an access control system for high security areas, or independently in areas that require a remote access switch.

Features & Benefits

- Exceeds ANSI A156.2 series 4000 Grade 1 torque requirements
- Universal input voltage – accepts 12V or 24V DC for installation flexibility
- Change operation mode between Electrically Unlocking (EU or Fail Secure) and Electrically Locking (EL or Fail Safe) by simply flipping a switch on the chassis
- Low maximum current draw allows multiple locks on a single power supply
- Low holding current produces minimal heat, eliminating "hot levers" in electrically locking applications
- Request-to-exit functionality can be easily upgraded in the field with the following kit part #: N123-062
- Extensive options for lever styles, finishes and functions
- UL listed for 3-hour fire door
- Available with Vandlgard® lever engagement on storeroom function - ideal for areas subject to abuse or vandalism

ND Series Mechanical Specifications	
Handing	Non-handed
Door thickness	1-5/8" to 2-1/8" (41-54 mm) standard including Vandlgard
Backset	2-3/4" (70 mm) standard, 2-3/8", 3-3/4" and 5" (60, 92, and 127 mm) optional
Faceplate	Brass or stainless steel; 1-1/8" x 2-1/4" (29 mm x 57 mm) square corner, beveled
Lock chassis	Zinc and steel components plated for corrosion resistance
Latch	Stainless steel, 1/2" (12 mm) throw, spring latch or deadlatch; 3/4" (19 mm) throw anti-friction deadlatch available for pairs of fire doors
Exposed trim levers	Pressure cast zinc, plated to match finish designation in nine designs
Roses	Wrought brass or zinc, plated to match product finish specification
Strike	ANSI curved lip strike 1-1/4" x 4-7/8" (32 mm x 124 mm) with 1-3/16" lip length standard
Cylinders and keys	Standard: 6-pin, solid brass Conventional (KIL) cylinder in the patented Schlage Everest 29 S123 keyway; two nickel silver cut keys per lock
Keying options	Available in 6-pin full size interchangeable core (FSIC), 7-pin SL in Conventional and FSIC formats, and 7-pin small format interchangeable core (SFIC). Less cylinder options are available made to fit Primus Conventional and FSIC formats plus non-Schlage cylinders from Best, Corbin Russwin, Medeco, Sargent and Yale.
Lever design and finish	Nine lever designs are available in nine finishes. 626 finish is also available with optional antimicrobial coating. High Security Ligature-Resistant trim (HSLR) is available in 630 satin stainless steel for all functions.

ND Series Electronic Specifications	
Voltage	Auto-detects 12/24V DC operation
Peak current	0.24 amp (240mA) at 70° F
Holding current	0.01 amp (10mA)
Operating temperature	Maximum +120°F (+49°C) Minimum 32°F (0°C)
Micro switch electrical rating for request-to-exit (N523-194) function	2 amps 30V DC

ND Series Electrified Functions	
No cylinder	ND12EL: Exit lock, electrically locked outside lever (fail safe) ND12EU: Exit lock, electrically unlocked outside lever (fail secure)
Outside cylinder	ND80EL: Storeroom lock, electrically locked outside lever (fail safe) ND80EU: Storeroom lock, electrically unlocked outside lever (fail secure)
Vandlgard	ND96EL: Vandlgard® storeroom lock, electrically locked outside lever (fail safe) ND96EU: Vandlgard® storeroom lock, electrically unlocked outside lever (fail secure)

Note: See catalog for additional details.

Vandlgard® Functions

Some functions feature Vandlgard locked lever protection. It allows the outside lever to rotate freely up and down when locked to limit the ability of vandals to apply excessive force to the chassis helping to prevent damage to internal components.

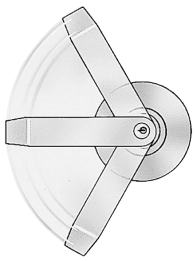

Allegion, the Allegion logo, Schlage, and the Schlage logo are trademarks of Allegion plc, its subsidiaries and/or affiliates in the United States and other countries. All other trademarks are the property of their respective owners.

© 2024 Allegion plc

004999, Rev. 10/24

VON DUPRIN®

Quiet Electric Latch Retraction-QEL

Featuring 98/99, 94/95, 78/75, 33A/35A & 22 Series Exit Devices

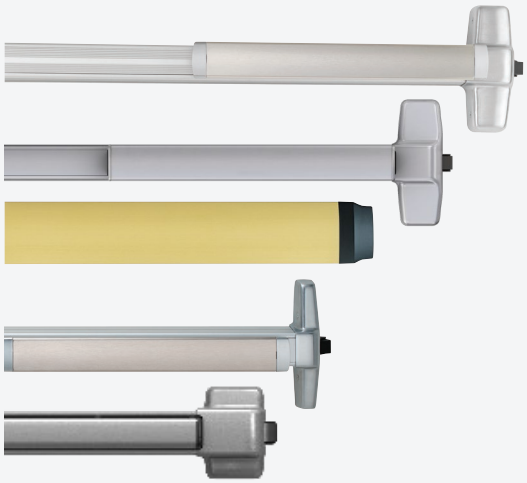

Overview

Quiet electric latch retraction (QEL) provides electronic control of an exit device for environments where limited operational noise is desired. The QEL option is Von Duprin's solution of choice for hospitals, libraries, museums and theaters where ambient noise can be disruptive. It is available on all Von Duprin 98/99, 94/95, 78/75, 33A/35A, and 22 Series exit devices.

These devices always provide mechanical egress. The electrified latch retraction can also be activated by an access system or building automation system to unlatch the exit device momentarily. Often the QEL is used with a credential reader and access control system to unlock the door momentarily for authorized users.

The QEL can also be configured to electronically retract the latch for an extended period of time to allow free entry. This is a convenient alternative to mechanical dogging. If manual dogging is required, the hex dogging option is available, to order specify HD-QEL on non fire-rated devices. Special center case dogging is also available for 98/99 rim and vertical systems, specify SD-QEL.

If an active pushpad is required utilize the QEL-L option. This option will retract the latch bolt and maintain an active pushpad. In some applications an audible indication of pushpad retraction is desired. The QEL-B (B-buzzer) option is a feature that can be added or retrofitted to QEL devices that will send an audible notification of initial latchbolt retraction.

The QEL option is available on panic and fire rated devices. Because fire exit hardware must be self-latching, an automatic fire alarm system must be incorporated to drop power to fire rated QEL devices in case of fire.

Features & Benefits

- QEL option available on all 98/99, 94/95, 78/75, 33A/35A, and 22 Series exit devices
- Energy efficient motorized latch retraction utilizes standard 2 amp power supply, enabling longer wire runs from power source
- Quiet operation in both mechanical and electronic states
- Modular design allows for a simplified installation
- On-board installation and troubleshooting diagnostics built into device
- Auto adjust latch retraction – automatically adjusts latch throw and pull
- Pushbar is pulled in electronically for quieter operation when dogged
- Vandal resistant – detects and responds to events of attack and tampering

Specifications Compliance

- Devices are BHMA Certified to ANSI/BHMA A156.3 (2001) Grade 1 for Exit Devices
- Devices are UL and cUL Listed as "Panic Hardware" (UL 305) and as "Fire Exit Hardware" (UL 10C)
- The QEL Conversion Kit is UL Classified under "Accessories for Single-Point Locks and Latches and Fire Exit Hardware" (UL 10C)

Electronic Specifications

QEL Electrical Load	
Voltage	24 VDC
Current	1.0 A Inrush (0.5 sec) 0.14 A Holding

QEL Wire Run Lengths	
Distance (one way)	Wire Gauge
Current	1.0 A Inrush (0.5 sec) 0.14 A Holding
200'	18 AWG
320'	16 AWG
500'	14 AWG
800'	12 AWG

QEL Wire Run Lengths

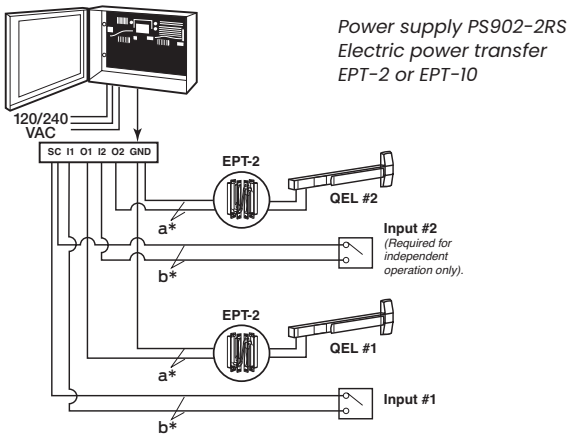

Accessories

The QEL has a low in rush current = 1.0 amps, so it can be used with standard Schlage power supplies. When powering multiple components, verify that the amperage requirements of all components combined does not exceed the power supply output rating, see table below for output ratings.

Schlage PS902	Schlage PS904	Schlage PS906
Up to 2 amps	Up to 4 amps	Up to 6 amps

How to Order

- **Standard** – Use prefix QEL, example QEL99L
- **Special Center Case Dogging** – Use prefix SD-QEL, example SD-QEL99L*
- **Hex Dogging** – Use prefix HD-QEL, example HD-QEL99L
- **Latchbolt Retraction Only** – Use suffix -L, example QEL-L
- **Audible Notification Conversion Kit (47856044)** – Use suffix -B (buzzer), example QEL-B. Note: Available only for retrofit on existing QEL devices.

* SD QEL is available for the 98/99 Series only.

© 2024 Allegion plc
006586, Rev. 06/24

VON DUPRIN®

Quiet Electric Latch Retraction Conversion Kits

Featuring 98/99, 33A/35A, 22, 75 & 78 Series Exit Devices

Overview

The Quiet Electric Latch (QEL) retraction latch option for Von Duprin® exit devices provides electronic control of an exit device for environments where limited operational noise is desired.

This optional feature is offered in fully configured exit devices, or as a conversion kit to mechanical or legacy latch retraction devices currently installed, to enhance the opening's operability.

Von Duprin offers both a modular and baseplate QEL conversion kits. In most applications, the modular QEL kit provides the necessary functionality at the lowest cost and is the recommended solution. The modular QEL conversion kit should be selected unless the product is currently a solenoid-driven latch retraction device (EL).

The baseplate QEL conversion kit was the initial conversion kit offered when Von Duprin originally launched the QEL. With the improved design of the motor assembly and availability of the modular conversion kit, the baseplate QEL conversion kit should primarily be used when converting an EL to a motor driven QEL solution.

The modular conversion kit was developed to improve the flexibility, cost, and installation process without the requirement of replacing the entire baseplate assembly. The modular motor assembly provides the same functionality and fits in both 3' device and 4' device. This design allows for flexibility of inventory and solutions for a broader set of openings.

For certain applications where an active pushpad is required, utilize latchbolt retraction only option (QEL-L). If an audible indication during the initial latchbolt retraction is desired, utilize the buzzer conversion kit option (QEL-B).

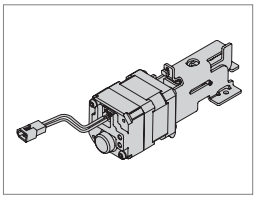

Modular QEL Kit

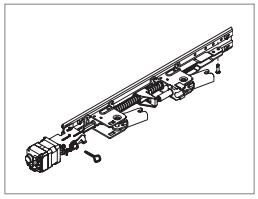

Baseplate QEL Kit

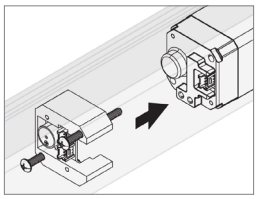

QEL-B Kit

Features & Benefits

Modular QEL Conversion Kit

- Recommended conversion kit solution for most applications
- Greater inventory flexibility: Can upgrade both 3' and 4' devices
- Ease of installation: Can easily and quickly be installed in existing product
- Lower list price: Same functionality offered at a lower list price

QEL Conversion Kit Options:

- **Latchbolt Retraction Only (QEL-L):** If an active pushpad is required, utilize this option to retract the latchbolt and maintain an active pushpad (RX Switch Included)
- **Audible Notification Buzzer (QEL-B):** Provides audible notification during initial latchbolt retraction (47856044)
- **AX (QEL-X):** Designed to meet the 2010 ADA standards for Accessible Design that state the force required to activate operable parts shall not exceed 5 pounds
- **Allegion Connect (CON):** Specify CON for the Connector Adapter Harness for quick and easy connection to power sources
- **Hex Dogging (HD-QEL):** Hex Dogging allows the electric latch retraction exit device to be manually dogged, holding in the latch bolt

Baseplate QEL Conversion Kit*

- EL conversion recommended when upgrading Von Duprin solenoid-driven latch retraction
- Device size 3' or 4' baseplate solution required to be specified

*Baseplate conversion kit available for the 98/99 and the 33A/35A Series devices only.

How to Order

Use the following guided process to select the correct QEL conversion kit. Assess your product and choose 'Yes' or 'No' for each of the feature sections shown. Then, align selections with table columns on the next page. For each column, choose the corresponding row of products.

#1
33A/35A, 98/99, or 22

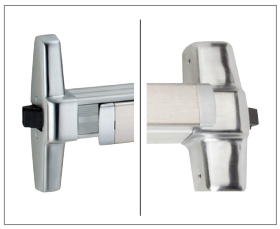

#2
AX
Y or N

#3
Connector
Y or N

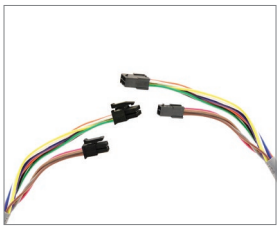

#4
Hex Dogging
Y or N

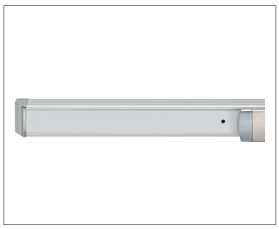

#1	#2	#3	#4		Recommended	Baseplate Conversion Kit Part #s	
33A/35A, 98/99, or 22*	**AX**	**CON**	**HD**		**Modular Conversion Kit Part #s**	**3'**	**4'**
33A/35A, 98/99	N	N	N	QELA Conversion Kit	114317-00	958003-00	040065-00
33A/35A, 98/99	N	N	Y	HD-QELA Conversion	958002-00	958004-00	040067-00
33A/35A, 98/99	N	Y	N	QELA Conversion Kit w/ Connector	040061-00	040063-00	040066-00
33A/35A, 98/99	N	Y	Y	HD-QELA Conversion Kit w/ Connector	040062-00	040064-00	040068-00
33A/35A, 98/99	Y	N	N	QELX Conversion Kit	041162-00	041166-00	041167-00
33A/35A, 98/99	Y	N	Y	HD-QELX AX Conversion Kit w/ Dogging	041164-00	041170-00	041171-00
33A/35A, 98/99	Y	Y	N	QELX AX Conversion Kit w/ Connector	041163-00	041168-00	041169-00
33A/35A, 98/99	Y	Y	Y	HD-QELX AX Conversion Kit w/ Connector	041165-00	041172-00	041173-00
22	N	N	N	22 QEL Conversion Kit	47447540	N/A	N/A
22	N	N	Y	22 HD-QEL Conversion Kit w/ Dogging	47447541	N/A	N/A
22	Y	N	N	22 QELX Conversion Kit	47447544	N/A	N/A
22	Y	N	Y	22 QELX Conversion Kit w/ Dogging	47447547	N/A	N/A
33A/35A, 98/99	N	N	N	3' QEL-L Conversion Kit	47895915	N/A	N/A
33A/35A, 98/99	N	N	N	4' QEL-L Conversion Kit	47895918	N/A	N/A

Example: #1 = 98/99 | #2 = AX (N) | #3 = CON (N) | #4 = HD (N) » 114317-00 is the correct modular kit part number.
For confirmation purposes, 958003-00 is the corresponding baseplate kit part number. If you previously ordered 958003-00 for mechanical upgrades to latch retraction, we recommend choosing the 114317-00 modular kit.

*Von Duprin 22 series devices modular conversion kits compatible with devices manufactured after January 1, 2022 (no seam on the mechanism case).
Note: Baseplate conversion numbers are not applicable for 75/78.

Installation resources

- Video: Converting mechanical 98/99, 33A/35A to QEL
- Video: Converting EL to QEL
- Installation instructions QEL 33A/35A, 98/99 Series
- Installation instructions QEL 22 Series

Service and support

- To modify an existing order, contact Customer Service at (877) 671-7011, option 1.
- For additional product questions, contact Technical Support at (877) 671-7011, option 2, then option 3.

© 2024 Allegion plc
015518, Rev. 10/24

VON DUPRIN®

ESL

Emergency Secure Lockdown

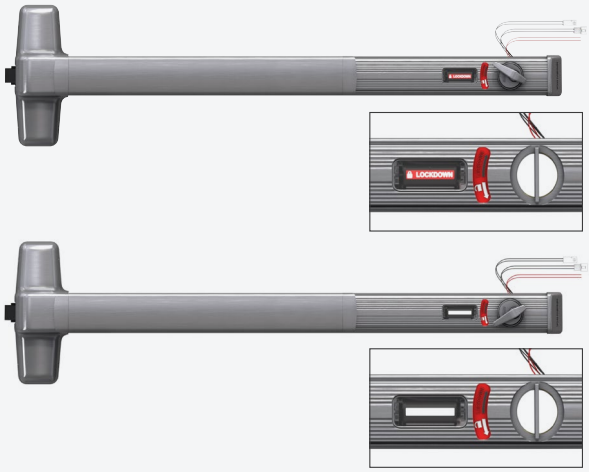

Overview

The Von Duprin® Emergency Secure Lockdown (ESL) option is ideal for high-occupancy spaces, such as auditorium-style classrooms with access control. These large spaces often don't have a way to locally lockdown the room without tapping into the building's access control system. ESL allows occupants to quickly secure the opening in the case of an emergency.

In the event lockdown is necessary, students or teachers can turn the thumb turn (or cylinder key) of the ESL option installed in the exit device. This action interrupts power to the QEL motor, electronically undogging (extending the latchbolt) to secure pull side of the door as well as sends a signal to the access control system. The status indication assures the occupant the exit device has been put into secure lockdown mode. Free egress out of the room is maintained from the exit side of the door, while access into the room can only be performed with a key.

The ESL can be installed on openings containing both a Von Duprin QEL exit device, and an electronic access control system with credential reader.[1] In addition, where a key cylinder or thumb turn is in use, Von Duprin directional indicators aid the user in determining which way the key or thumb turn must be rotated to secure the opening.

[1] Recommended with trim functions: NL, K-NL, L-NL, NL-OP, T-KC, L-KC. Install in alignment with 2018 IBC 1010.2.8 NFPA 101 14.2.2.2.4 or per local AHJ.

Status indicator

Directional indicator

Features & Benefits

- ANSI BHMA Grade 1 & UL 10C Fire Rated
- Designed with reliability and durability in mind for high use and abuse environments
- Maintains free egress as required by code while still securing the door for lockdown
- Pad printed icons provide a clear direction of rotation to secure opening
- Security indicator with clear LOCKDOWN/ BLANK icons and words behind tamper-resistant window
- Lockdown action interrupts power and extends latchbolt to secure pull side of door as well as sends signal to access control system
- When emergency lockdown is activated card access system no longer operates QEL
- Physical access is obtained by key override from pull side in lockdown mode
- Available for 98/99 and 33A/35A series exit devices that have QEL latch retraction
- Modular conversion kits allow quick and easy upgrade of existing devices
- Allows for scheduled electronic dog/undog or credential access during normal day-to-day use
- Works with any physical access control provider, no additional integration required

Specifications

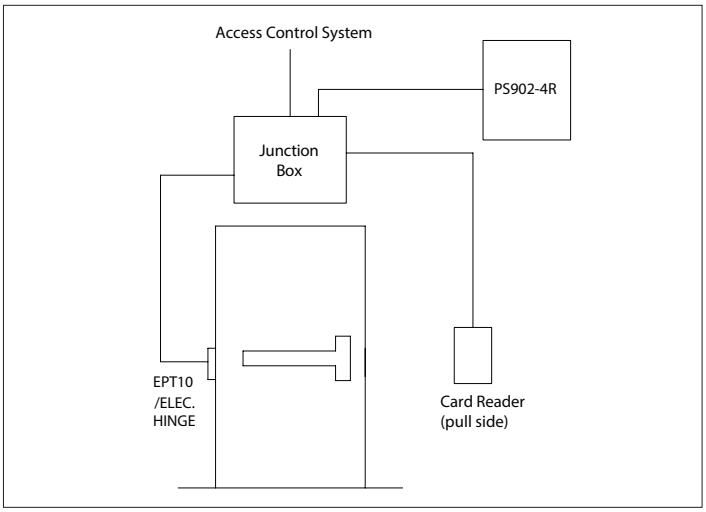

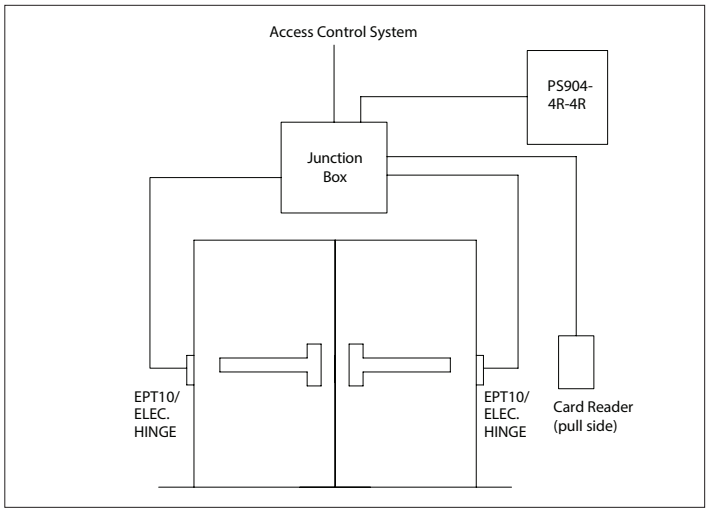

Compatibility, Requirements & Considerations								
ESL compatibility	For use with 33A/33A-F, 35A/35A-F, 98/98-F, or 99/99-F series exit devices that have QEL							
Device type	R, CVC, CVR, SV, M							
Rating	Fire exit hardware and panic hardware							
Indicator features	✔ Status indicator ✔ Directional indicator ✔ Change state of door from interior[1]							
Minimum door widths	**QEL Minimum Door Widths**				**QEL and ESL Minimum Door Widths**			
	SVR	CVR/CVC	MOR	RIM	SVR	CVR/CVC	MOR	RIM
98/99 3'	28-1/4"	28-1/4"	28-3/4"	29-1/4"	36"	36"	36"	36"
98/99 4'	34-1/4"	34-1/4"	34-3/4"	35-1/4"	42"	42"	42-1/2"	43"
33A/35A 3'	28-1/4"	25-1/4"	–	29-1/4"	36"	36"	–	36"
33A/35A 4'	34-1/4"	34-1/4"	–	35-1/4"	42"	42"	–	43"
Recommended trim functions[2]	NL, K-NL, L-NL, NL-OP, T-KC, L-KC[2]							
Cylinder	A standard 1-1/4" (32mm) mortise cylinder with an inverted straight cam and compression ring and spring is required. ESL doesn't come with cylinder or thumb turn and must be ordered separately.[3]							
Power supply (minimum requirement)	Single doors - PS902-4R							
	Double doors - PS904-4R-4R. For fire applications, add 900-FA							
Device restrictions	Windstorm (WS), SD-QEL/HD-QEL, and EL solenoid devices not compatible							
Retrofits existing devices for field upgrade:	Yes - Kit available							

[1] Interrupts power to QEL.

[2] Install in alignment with 2018 IBC 1010.2.8 NFPA 101 14.2.2.2.4 or per local AHJ.

How to Order

- For configured device, specify series, device length and ESL option. (Note: QEL and cylinder options are required, but not included.)
- For kits, use table below to specify part number and designate mechanism case cover plate.

Example (kit only): 967240 x US28

Kits for Device Size	Part #	619 (US15)	606 (US4)	711 (315)	628 (US28)	643e	630 (US32D)	710 (313)	605 (US3)	625 (US26)	622 (US19)	695 (SP313)	612 (US10)
33A ESL kit for 3' device	967240	–	•	•	•	•	–	•	•	•	•	•	•
33A ESL kit for 4' device	962741	–	•	•	•	•	–	•	•	•	•	•	•
35A ESL kit for 3' device	967242	•	•	•	•	•	•	•	•	•	•	•	•
35A ESL kit for 4' device	967243	•	•	•	•	•	•	•	•	•	•	•	•
98 ESL kit for 3' device	967244	•	•	•	•	•	•	•	•	•	–	–	•
98 ESL kit for 4' device	967245	•	•	•	•	•	•	•	•	•	–	–	•
99 ESL kit for 3' device	967246	•	•	•	•	•	–	•	•	•	–	–	•
99 ESL kit for 4' device	967247	•	•	•	•	•	–	•	•	•	–	–	•

[3] Compatible cylinders available from Schlage.

- Conventional cylinder: 20-001 1-1/4" XQ11-949
- Thumb turn cylinder: 09-904 1-1/4" B502-191 XQ11-949
- ADA thumb turn cylinder: 09-904 1-1/4" XB11-720 B502-191 XQ11-949

This page intentionally left blank.

Allegion, the Allegion logo, ENGAGE and Von Duprin and are trademarks of Allegion plc, its subsidiaries and/or affiliates in the United States and other countries. All other trademarks are the property of their respective owners.

© 2024 Allegion plc
013791, Rev. 10/24

VON DUPRIN®

M996L/L-BE

Motor Driven Electrified Trim

Overview

M996L/L-BE motor driven electrified breakaway lever trim provides remote locking and unlocking capabilities while incorporating the patented vandal-resistant trim design.

The motor can be energized from a distant controller, thus allowing access control of the opening. The control of stairwells in high-rise buildings is a common application for this trim. When electrically unlocked, the lever is operable. When electrically locked, the lever is rigid.

The vandal-resistant breakaway feature engages when more than 35 lbs. of torque pressure is applied to the locked lever. In breakaway mode, the lever dangles, internal components are protected from breakage, and the trim remains locked. Lever position is restored simply by pulling up on the lever.

The trim works with either 12VDC or 24VDC power supplies. The trim also comes with a field selectable dip switch for either Fail Safe (FS) or Fail Secure (FSE) functionality—no special configuration required.

The M996 key bypass options are:

- M996L (key functions as night latch mechanical override)
- M996L-BE (no key override, blank escutcheon)

The M996 trim can be ordered with a device, added to an existing 98/99 series device application, or a conversion kit can be added to an existing 996L/996L-BE, or E996L/E996L-BE trim.

Features & Benefits

- Vandal-resistant breakaway lever
- Dual voltage - works with either 12VDC or 24VDC power supplies
- Furnished Fail Safe (FS); convertible to Fail Secure (FSE) via dip switch
- Key bypass override (M996L), or no key bypass with blank escutcheon (M996L-BE)
- Field retrofit kits work for either mechanical 996 or updating solenoid driven E996
- Available with Allegion Connect (-CON)
- Field-reversible handing

Specifications

24VDC FSA	0.08 amp in-rush*, 0.01 amp holding
24VDC FSE	0.59 amp in-rush*, 0.01 amp holding
12VDC FSA	0.13 amp in-rush*, 0.01 amp holding
12VDC FSE	1.12 amp in-rush*, 0.01 amp holding

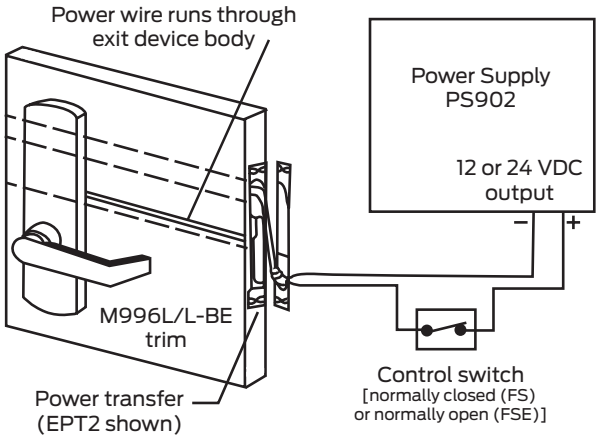

To Order Specify

- Use "M" prefix, example M996L
- Device type: R/V (rim/surface or concealed vertical rod/cable) or M (mortise)
- Fail mode: Furnished Fail Safe (FS) only; field convertible to Fail Secure (FSE) via dip switch
- Lever style: 06 lever is furnished standard if not specified
- Handing: RHR or LHR (RHR is furnished standard if not specified; field reversible)
- Finish: 605, 606, 612, 613, 619, 622, 625, 626, 643e,693, 695
- Allegion Connect: Specify -CON if desired
- When ordering with device specify trim series with "M" prefix, example 9927L-BE 3' US26D M996L-BE
- When ordering M996 conversion kit, specify:

Description	Part #
996 R/V/C conversion to motorized kit	47273111
996 Mortise conversion to motorized kit	47273112

Note: For more ordering details, please reference Von Duprin catalog and price book.

M996L Electrical Wiring

- Power input for M996L/L-BE is either 12 VDC or 24 VDC
- Two wires on the trim are non-polarized (18 AWG minimum)

Power Supply Requirements

Fail Secure Applications

Maximum M996 per power supply (in-rush consideration) – no logic board case shown in chart

Power Supply	12VDC	24VDC
PS902*	2	4
PS904/PS914*	4	8
PS906	6	12

*Adding 4RL board sequencing allows additional M996 per power supplies.

Fail Safe Applications

Total in-rush of all M996 not to exceed power supply maximum current.

© 2024 Allegion plc
013467, Rev. 01/24

VON DUPRIN®

Remote Undogging & Remote Monitoring

Overview

In many institutional facilities, traffic is funneled through main perimeter openings equipped with access control. The remaining secondary perimeter openings utilize mechanical hardware, some of which is mechanically dogged (unlocked) and undogged (locked) to enable push/pull operation. The manual management and monitoring of these openings is inefficient and prone to human error.

The Von Duprin® RU retrofit kit for exit devices is a cost effective solution for these secondary openings that enables remote undogging for centralized lock down and door status monitoring. It connects wirelessly to our access control Physical Access Control Software (PACS) providers via an IP or RSI/RS-485 connection to the ENGAGE™ Gateway. It is a modular battery powered kit that can be added on to existing 98/99 and 33A/35A series devices. The RM option is a sensor only configuration for exit only or fire rate doors that require monitoring. It provides visibility to request to exit (RX), latchbolt monitor (LX) and door position switch (DPS).[2] This complementary solution enhances security by expanding the reach of the access control system to secondary openings that traditionally would go unaddressed because of the cost and complexity of running wires. Bringing these secondary openings online provides a more comprehensive perimeter security package.

Features & Benefits

- Access control managed via an IP or RSI/RS-485 connection to the ENGAGE Gateway through PACS providers
- Modular kit compatible with 98/99 and 33A/35A series devices
- Enables undogging for centralized lockdown (via real time IP or RS-485) or scheduled lockup (via Wi-Fi or real time IP or RS-485)
- Cylinder and hex mechanical dogging is maintained but can be overridden electronically
- Enables comprehensive view of door status via request to exit (RX), latchbolt monitor (LX) and door position switch (DPS)
- Sensor only configuration version (RM) available for exit only doors or fire rated doors
- Battery life up to 2 years with 4 standard AA batteries[1]
- Electronics Certifications: UL294 indoor, FCC Part 15 - Commercial

[1] Assuming dog and undog sequence use rate is two (2) cycles per day, exception notification rate is one occurrence every two (2) days, and door use of at least 200 cycles per day (sensor and wireless activity indication).

[2] RU using ENGAGE software or PAC solution via Wi-Fi is available for scheduled lock-up events only. This solution is not available for real time lockdown.

CYBERSECURITY
Learn about Allegion's commitment

Main Components of RU Kit

Cover

Battery housing/batteries/main PCB

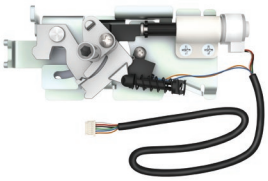

Undog assembly

LX/DPS and RX switch assembly

Wireless Specifications	
Audits	Up to 2,000[1]
Visual communications	LED (red, amber, green)
Audible communications	Audible indicator (field configurable)
Communication standards	• Bluetooth® low energy (BLE) (version 4.2) • Advanced Encryption Standard (AES), 256-bit • 2.4 GHz Wi-Fi® (IEEE 802.11b/g/n)[2] • WPA2, WPA, WEP, 802.1x • Transport Layer Security (TLS) version 1.2
Communication range	Up to 30 ft.
Wake-Up on Radio	Responds to command from host in less than 5 seconds when linked to ENGAGE Gateway (requires PACS provider system)
Connectivity options	• IP or RSI/RS-485 connection to the ENGAGE™ Gateway • BLE to mobile devices • BLE to ENGAGE Gateway • Wi-Fi (ENGAGE software enabled or PAC enabled where integrated)[2]
Battery life	Up to 2 years with 4 AA batteries[3]
Operating temperature	-4° to 140°F (-20° to 60°C)
Operating humidity	0 - 100% non-condensing
Certifications	**Exit devices will maintain the following:** BHMA A156.3 (Grade 1), UL305, Windstorm WX98/9927, Tornado FEMA 361 ANSI/ICC500, ADA ANSI A117.1, UL 10C 3 hour, ANSI/BHMA 156.18-2012 QUV **Electronics Certification:** UL294 indoor, FCC Part 15 - Commercial

Available Status Signals

- Request-to-exit
- Door position
- Interior cover tamper[4]
- Magnetic tamper
- Battery status
- Dog/undog status[5]
- Communication status[4]

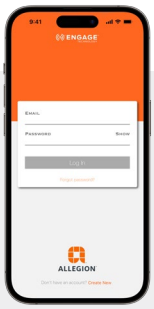

Use the ENGAGE mobile app to commission and connect devices to your access control system of choice.

Download on the App Store

ANDROID APP ON Google play

[1] Maximum audit storage capacity of lock. Can vary upon access control software audit storage capacity when linked with an ENGAGE Gateway RS-485 to ACP.

[2] For offline management only.

[3] Assuming dog and undog sequence use rate is two (2) cycles per day, exception notification rate is one occurrence every two (2) days, and door use of at least 200 cycles per day (sensor and wireless activity indication).

[4] Consult your access control software provider for specific scope of support.

[5] Software indicates dog/undog status based on sequence of events.

Mechanical Specifications	
Dogging Options	Cylinder Dogging, Hex Dogging
ANSI standard (meets or exceeds)	ANSI/BHMA A156.25-2013 (indoor/outdoor) ANSI/BHMA A156.2-2011, Series 4000, Grade 1

Compatible Exit Devices	33A/35A*	98/99*
RIM	•	•
SVR	•	•
CVR	•	•
CVC	•	•
Mortise	–	–
3 pt. latch	•	•

* For devices manufactured after 9/1997.

RU not compatible with exit devices with the following options:
QEL, DI/CDSI/HDSI, RX2, AD, SD, SS, PN, ES/PL, CX, XP

RM not compatible with exit devices with the following options:
DI/CDSI/HDSI, RX2, AD, SD, SS, PN, ES/PL, CX, XP

Compatible Device Lengths
For Remote Undogging (RU) Module installation: All 33A/35A and 98/99 device types – 3' (914 mm) length to 2' 9" (838 mm), 4' (1219 mm) length to 3' 3" (991 mm)
For Remote Monitoring (RM) Module only: All 33A/35A and 98/99 device types – 3' (914 mm) length to 2' 83/4" (832 mm), 4' (1219 mm) length to 3'23/4" (984 mm)
For Remote Monitoring (RM) Module with EL/QEL: All 33A/35A and 98/99 device types – 3' (914 mm) length only, 4' (1219 mm) length to 3' 51/8" (1045 mm)

How to Order	
Remote undogging	
RU 3' kit	47258681
RU 4' kit	47258682
Remote monitoring	
RM 3' kit	47258683
RM 4' kit	47258684

If the door and exit device are fire rated, and the exit device type is a 98/99-F Rim manufactured prior to April 1, 2018, a new center case will be required before proceeding with the installation of the RM kit. 98/99-F Rim Center Case Kit Less Cover, part number 050026.

Note: Specify CON for Allegion Connect.

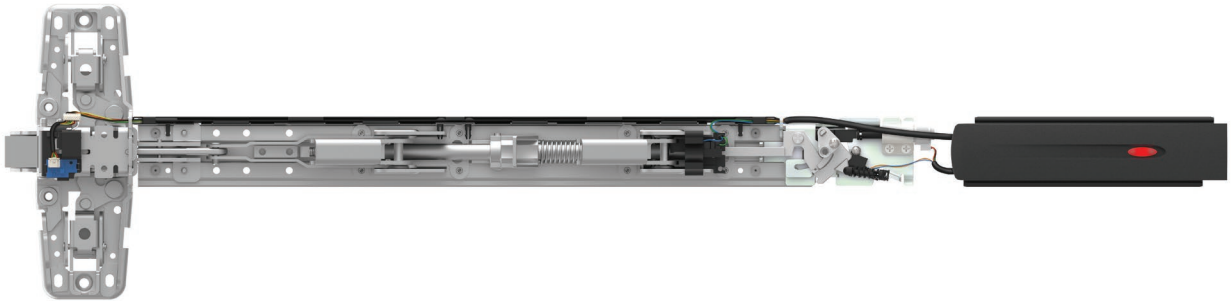

This page intentionally left blank.

Allegion, the Allegion logo, ENGAGE and Von Duprin and are trademarks of Allegion plc, its subsidiaries and/or affiliates in the United States and other countries. All other trademarks are the property of their respective owners.

© 2024 Allegion plc
011898, Rev. 01/24

VON DUPRIN®

Delayed Egress Systems

CHEXIT, RCM & DE5300

98/99 Series CHEXIT

33A/35A Series CHEXIT

RCM/DE5300

Overview

The Von Duprin® CHEXIT is a delayed egress option available on all 98/99, XP98/99 and 33A/35A series exit devices. It is commonly used in behavioral health, memory care, and maternity applications to prevent patient abduction or elopement and in retail stores for asset protection. All control inputs, auxiliary locking, local alarm and remote signaling outputs are self-contained. The CHEXIT can easily be integrated with access control, fire prevention and infant protection systems.

The standard CHEXIT device sounds an alarm and keeps the door secured for 15 seconds following an exit attempt with immediate release upon fire alarm. Numerous configurable settings allow the CHEXIT to be customized based on specific application or code requirements.

Recently updated, the improved design of the CHEXIT makes installation and maintenance easier. The new motor driven blocking actuator is quiet and energy efficient, with an input current of only 1.25 amps and wire run up to 500 feet from the power transfer to power supply (14 AWG). Additional options were added including indefinite release delay to address 2015 IBC requirements for controlled egress.

The Remote CHEXIT Module (RCM) provides the same functionality for smaller door sizes by placing electronic components in a control box. Likewise, the DE5300 utilizes a control box, RX-LX low current request to exit panic device and a Schlage® direct hold electromagnetic lock.

Features & Benefits

- Available on all 98/99, XP98/99 and 33A/35A series exit devices
- Redesigned for easy and cost effective installation and maintenance
- Motor driven blocking actuator provides quiet and energy efficient operation
- Flexible field configurable functions, including: nuisance delay 0, 1, 2 or 3 seconds, audio sound level high/low, power up setting armed/disarmed
- Trim actuator/input for outside trim connection with selectable fail safe/ secure setting
- Secure status relay output
- RCM and DE5300 available to accommodate a variety of door configurations and applications
- UL 294 Listed and meets 2015 IBC 1010.1.9.7 Delayed Egress and 1010.1.9.6 Controlled Egress and NFPA 7.2.1.6 Special Locking Arrangements

CHEXIT Device

(with Motor Driven Blocking Actuator)

Available for 33A/35A, 98/99 and XP98/99 Series Devices

The Von Duprin CHEXIT device is designed for controlled egress applications. It is UL 294 listed and meets 2015 International Building Code (IBC) sections 1010.1.9.7 Delayed Egress and 1010.1.9.6 Controlled Egress and National Fire Protection Associations (NFPA) sections 7.2.1.6 Special Locking Arrangements. All control inputs, auxiliary locking, local alarm and remote signaling outputs are self-contained in the CHEXIT assembly. Numerous configurable options allow the device to be customized for the specific code or application requirements. The standard CHEXIT device sounds an alarm and keeps the door secured for 15 seconds following an exit attempt with immediate release upon fire. Included with each device is a 6" x 20" decal for application on the door reading "PUSH UNTIL ALARM SOUNDS. DOOR CAN BE OPENED IN 15 SECONDS".

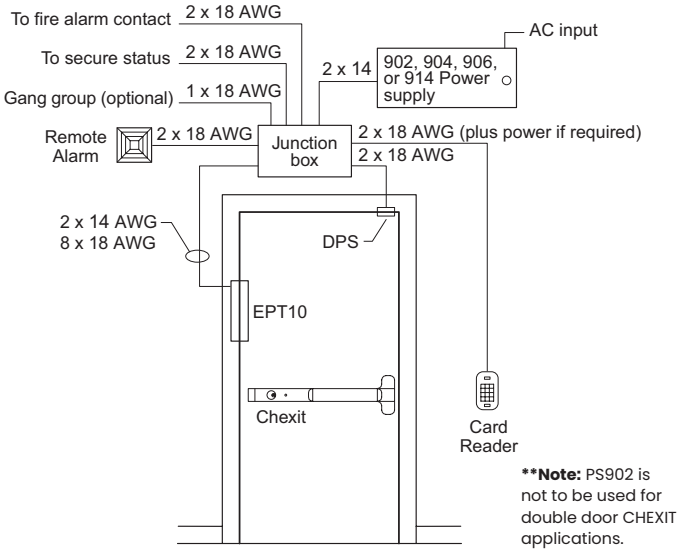

Figure 1. Riser Diagram, Single Door

Minimum Door Opening Sizes for CX Devices Consult factory for other size requirements.		
Device	3' (914mm) Length	4' (1219mm) Length
CX33A/35A	2'10-3/4" (883mm)	3'4-3/4" (1035mm)
CX3327A/3327A-F 3527A/3527A-F	2'10-1/4" (870mm)	3'4-1/4" (1022mm)
CX3347A/3347A-F 3547A/3547A-F	2'10-1/4" (870mm)	3'4-1/4" (1022mm)
CX3348A/3348A-F 3548A/3548A-F	2'10-1/4" (870mm)	3'4-1/4" (1022mm)
CX3349A/3349A-F 3549A/3549A-F	2'10-1/4" (870mm)	3'4-1/4" (1022mm)
CX3350/3350WDC-F 3550/3550WDC-F	2'10-1/4" (870mm)	3'4-1/4" (1022mm)
CX98/98-F/99/99-F	2'10-3/4" (883mm)	3'4-3/4" (1035mm)
CX-XP98/XP98-F/XP99/XP99-F	2'10-3/4" (883mm)	3'4-3/4" (1035mm)
CX9827/9827-F/9927/9927-F	2'10-1/4" (870mm)	3'4-1/4" (1022mm)
CX9847/9847-F/9947/9947-F	2'10-1/4" (870mm)	3'4-1/4" (1022mm)
CX9848/9848-F/9948/9948-F	2'10-1/4" (870mm)	3'4-1/4" (1022mm)
CX9849/9849-F/9949/9949-F	2'10-1/4" (870mm)	3'4-1/4" (1022mm)
CX9850/9850WDC-F 9950/9950WDC-F	2'10-1/4" (870mm)	3'4-1/4" (1022mm)
CX9857/9857-F/9957/9957-F	2'10-1/4" (870mm)	3'4-1/4" (1022mm)
CX9875/9875-F/9975/9975-F	2'10-1/4" (870mm)	3'4-1/4" (1022mm)

Electrical Specifications Specifications / Power Requirements*
Input voltage – 24VDC
Input current inrush – 1.25A
Input current holding – 390mA
Alarm relay and Secure relay contact ratings – 24VDC, 1A
Fire alarm, Inhibit and Door position switch inputs require normally closed dry contacts.

Power Supply Information for CX Devices with Motor Driven Blocking Actuator*	
Power Supply	Maximum Number of Devices*
PS902 (up to 2 amps)	1 CHEXIT device
PS904 (up to 4 amps)	3 CHEXIT devices
PS906 (up to 6 amps)	4 CHEXIT devices
PS914 (up to 4 amps)	4 CHEXIT devices

When powering multiple components, verify that the amperage requirements of all components combined does not exceed the power supply output rating. Consult Installation Instructions for proper wire gauge and wire run requirements. Exceeding the recommended devices and/or not following Installation Instructions may void your warranty. For more information call Customer Care at 877-671-7011.

How to Order*

1. Prefix product description number "CX", EX: CX99L
2. Specify option, EX: CX-RCM or CD-CX
3. Door size other than 3' (914mm)
4. Door thickness other than 1-3/4" (45mm)
5. Finish
6. Handing, LHR or RHR; required with "CD" option

*Note: The information listed in these pages reference the power supply and operating requirements for the redesigned CHEXIT with motor driven blocking actuator that launched August 24, 2015. For information on devices built previous to August 24, 2015, please contact Customer Care at 877-671-7011.

RCM Remote Chexit Module

Designed to provide the concept of the Chexit delayed exit system for door sizes smaller than the standard device can accommodate. The Chexit module is installed in a control box and mounted in a remote location. Features and functions of the standard Chexit exit device are available on the RCM.

Minimum Door Opening Sizes for RCM Devices
Consult factory for other size requirements.

Device	3' (914mm) Length	4' (1219mm) Length
CX-RCM33A/35A	2'5" (737mm)	2'11" (889mm)
CX-RCM3327A/3327A-F /3527A/3527A-F	2'4-1/2" (724mm)	2'10-1/2" (876mm)
CX-RCM3347A/3347A-F/ 3547A/3547A-F	2'4-1/2" (724mm)	2'10-1/2" (876mm)
CX-RCM3348A/3348A-F/ 3548A/3548A-F	2'4-1/2" (724mm)	2'10-1/2" (876mm)
CX-RCM3349A/3349A-F/ 3549A/3549A-F	2'4-1/2" (724mm)	2'10-1/2" (876mm)
CX3350/3350WDC-F/ 3550/3550WDC-F	2'4-1/2" (724mm)	2'10-1/2" (876mm)
CX-RCM 98/98-F/99/99-F	2'5" (737mm)	2'11" (889mm)
CX-RCM XP98/XP98-F/ XP99/XP99-F	2'5" (737mm)	2'11" (889mm)
CX-RCM 9827/9827-F/ 9927/9927-F	2'4-1/2" (724mm)	2'10-1/2" (876mm)
CX-RCM 9847/9847-F/ 9947/9947-F	2'4-1/2" (724mm)	2'10-1/2" (876mm)
CX-RCM 9848/9848-F/ 9948/9948-F	2'4-1/2" (724mm)	2'10-1/2" (876mm)
CX-RCM 9849/9849-F/ 9949/9949-F	2'4-1/2" (724mm)	2'10-1/2" (876mm)
CX-RCM 9850/9850WDC-F/ 9950/9950WDC-F	2'4-1/2" (724mm)	2'10-1/2" (876mm)
CX-RCM 9857/9857-F/ 9957/9957-F	2'4-1/2" (724mm)	2'10-1/2" (876mm)
CX-RCM 9875/9875-F/ 9975/9975-F	2'5-1/2" (743mm)	2'11-1/2" (902mm)

Specifications / Power Requirements*
Size – 3.75" x 5.57" x 2.50"
Input voltage – 24VDC
Input current inrush – 1.25A
Input current holding – 390mA
Alarm relay and Secure relay contact ratings – 24VDC, 1A
Fire alarm, Inhibit and Door position switch inputs require normally closed dry contacts.

How to Order

See Chexit "How to Order" on previous page.

*Note: The information listed in these pages reference the power supply and operating requirements for the redesigned RCM modules with motor driven blocking actuator that launched August 24, 2015. For information on devices built previous to August 24, 2015, please contact Customer Care at 877-671-7011.

DE5300 Delayed Egress System

DE5300 Delayed Egress System — Designed for controlled egress applications when used in conjunction with a magnetic lock. It meets both life safety and security needs, as well as the requirements of NFPA for "Special Locking Arrangement" and IBC "Special Egress-Control Devices". All control units, auxiliary locking, local alarm and remote signaling outputs are self-contained in the DE5300 assembly.

The DE5300 is commonly used on narrow stile doors where a standard or narrow stile Chexit is not practical. DE5300 Delayed Exit System uses a Chexit logic board and a Von Duprin RX-LC (low current request to exit) panic device to control a Schlage Electronics Direct Hold Magnetic Lock.

The Chexit module for the DE5300 is installed in a control box and mounted in the wall adjacent to the door. Features and functions of the standard Chexit exit device are available on the DE5300.

Specifications / Power Requirements*
Size - 3.75" x 5.57" x 2.50"
Input voltage – 24VDC
Input current – 1A
Alarm relay and Secure relay contact ratings – 24VDC, 1A
Fire alarm, Inhibit and Door position switch inputs require normally closed dry contacts.

How to Order

1. DE5300
2. M420/P, M450/P, or M490/P magnetic lock (order direct from Schlage Electronics)
3. RX-LC 22/33A/35A/98/99 device
4. PS900 Series
5. EPT-2/10

CHEXIT, Remote Chexit Module (RCM) & DE5300 Features

The Chexit, RCM and DE5300 devices have several features and options available to fit your needs.

Inputs & Outputs

Fire Alarm Input
Releases the door immediately upon a fire alarm allowing immediate egress. The Internal Alarm can be silenced during a fire input via an onboard switch setting.

Inhibit Input (Access Control)
Optional input provides authorized egress or entry when the device is Armed using an external card reader, Key Switch, etc. Also allows remote reset of the Chexit, RCM or DE5300 in an alarmed condition. The ability to reset alarms with the inhibit input can be disabled via an onboard switch setting.

Door Position Switch Input
An optional DPS can provide door position status additional security, ensuring that the door is closed, and can cause alarm when the door is left or forced open.

Gang Bus
The Gang bus allows a device to signal other Chexit, RCM or DE5300 devices when it enters the Release Delay, allowing multiple doors to release at the same time in an emergency. Up to 8 devices may be connected to the Gang Bus.

Alarm Relay Contacts
Control a Remote Alarm, such as a horn or lamp, or signal an external monitor. The contacts can be configured with a jumper as Normally Open or Normally Closed, and become active upon entering an alarmed condition.

Secure Relay Contacts
Signal an external monitor. The contacts can be configured as Normally Open or Normally Closed with a jumper, and become active when the DPS indicates the door is closed and the Push Pad is locked.

Delays

Release Delay
When the Push Pad is actuated and the Nuisance Delay expires, the device enters the Release Delay with alarm. During the Release Delay, the Internal Alarm sounds, the Alarm Relay activates, and the device remains locked for 15 seconds (less any time already elapsed during the Nuisance Delay). Once started, the Release Delay sequence will not stop and the devices will unlock.

Nuisance Delay
The Nuisance Delay is the brief time a Push Pad can be accidently actuated before the Release Delay sequence starts. If the Nuisance Time is set to 0 seconds the device will enter Release Delay as soon as the Push Pad is actuated (when armed). Setting the Nuisance Time to 1, 2, or 3 seconds allows the Push Pad to be pressed for 1 to 3 seconds before the device goes into Release Delay. If the Nuisance Audio and Nuisance Delay are both on, the Internal Alarm will pulse during the Nuisance Delay. The Alarm Relay does not activate during the Nuisance Delay. If the Push Pad is released before the Nuisance Delay expires, the device will remain armed.

Rearm Delay
The amount of time after the Key Switch or Inhibit Input is deactivated to when the device rearms. It is designed to give someone time to pass through the door before rearming occurs. The Rearm Time can be changed via the onboard switch settings from 0 and 28 seconds in 2 second increments. If the Rearm Time is set to 30 seconds and a DPS is used, if the door is opened and the Rearm Time expires, there will be no alarm. The device will rearm after the door is closed. If the door never opens, the device will rearm after 30 seconds. If not using a DPS, the device will always rearm in 30 seconds.

DPS Delay
If the DPS detects that the door closed during the Rearm Delay, the device ends the Rearm Delay and allows 2 seconds for the latch to clear the strike before rearming.

Interface

Key Switch
Provides the means to Arm or Disarm/Reset the device. Turning the Key Switch clockwise initiates the Rearm Delay, and turning the Key Switch counter-clockwise Disarms/Resets the device. The Key Switch allows the key to be removed in either the Arm or the Disarm/Reset position.

Status Indicator
The red Status Indicator flashes slow if the device is armed, flashes fast in an alarmed mode, is off when inhibited and on solid during Rearm Delay.

Internal Alarm
The Internal Alarm sounds continuously during and after a fire alarm or a Release Delay, pulses fast during the Nuisance Delay or a tamper and pulses slow during Disarmed Powerup mode.

Settings

Armed Powerup
When set to OFF, a power disruption and power return will put the device in a disarmed, unlocked alarm mode.

Trim Fail Safe / Fail Secure (FS/FSE)
The trim input power can be set to FS (Fail Safe; locked when energized, unlocked when deenergized or during power failure) or FSE (Fail Secure; unlocked when energized, locked when deenergized or during power failure). The trim must be bought or modified to physically function as FS or FSE. This on board setting only selects the trim input power.

Options

Cylinder Dogging — Special center case cylinder dogging option is available to allow push/pull operation of the Chexit, when disarmed and used in a heavy traffic area. Prefix device with "CD" and specify handing.

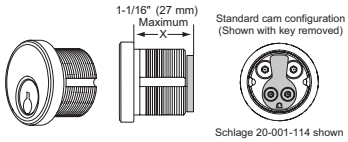

Cylinders — Cylinders are not furnished with the Chexit, RCM or DE5300 devices and must be specified when ordering. Use 1-1/4" mortise cylinder with compression ring K510-406 with straight cam and orient cam as shown. Schlage cylinder 20-001-114 recommended for the device and the CD cylinder dogging option.

See Schlage Pricebook for additional information.

© 2024 Allegion plc
010942, Rev. 01/24

VON DUPRIN®

Monitor Strikes

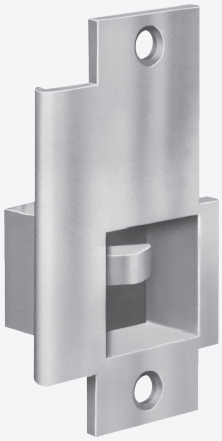

Overview

Monitor strikes are designed to offer remote door monitoring through the use of a signal switch mounted in the strike to monitor the latch bolt. This series of monitor strikes is designed for use with Von Duprin and most other manufacturers' rim, mortise, surface and concealed vertical rod exit devices and cylindrical, mortise and unit type locks.

The monitor strike replaces the standard door strike. The tripper in the monitor strike is depressed when the latch bolt is fully inserted in the strike. The stainless steel tripper activates an electric switch.

Features & Benefits

- UL listed as "miscellaneous door accessory"

Monitor Strike Overview

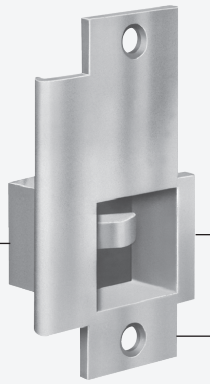

Note: Tripper selection is based on the throw and shape of the latch bolt.

Monitor Strike Electrical Rating	
SPDT switch (single pole double throw)	24VDC @ 2 Amps (resistive)

Model Specifications			
Model #	4263	4268-T1	4582
Lockset	Rim or surface vertical rod exit devices	Rim fire exit devices	Mortise or cylindrical locks
# Doors	Single or pair	Single	Single or pair
Compatibility (with tripper type)	Von Duprin 22, T3 2227, T1 33A/35A, T3 3327A/3527A, T3 44, T1 55, T1 88, T1 8827, T1 98/99, T3 9827/9927, T1 Falcon 24-R, 25-R, T3 (3/49" [19mm] throw) Yale® 1500, T1 (5/89" [16mm] throw)	Von Duprin 22/22-F 33A/35A 88/88-F 98/99 98-F/99-F	Schlage 3/4" (19mm) Cyl., T2 L90, T2 Falcon 5/8" (16mm) ML (LR), T2 Arrow™ 5/8" (16mm) ML (LR), T1 Corbin Ruswin® 5/8" (16mm) ML (LR) 5999 ML (LR), T2 Yale® 5/8" (16mm) ML (LR), T2 **Caution: proper selection of handing required.** 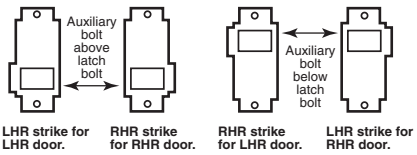
Certifications		UL list (GXHX R4504) fire exit hardware	UL List (GXHX R4504) fire exit hardware
Application Notes	1	2	3

Application Notes

1. The 4263 is non-handed and features horizontal adjustment to compensate for misalignment of door and frame. 4263 may be used with a mullion. Tripper selection (-T1 or -T3) is based upon the lock to be used with.
2. The 4268 features horizontal adjustment to compensate for misalignment of door and frame. 4268-T1 is not for use with mullions.
3. For use on single or pair of doors with ANSI 115.3 frame cutout (frame modification required.) Tripper selection (-T1 or -T2) is based upon the lock to be used.

Basic Monitor Strike Circuit

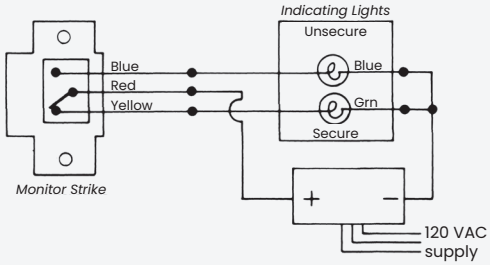

Power supply same voltage as lamps with sufficient current capabilities

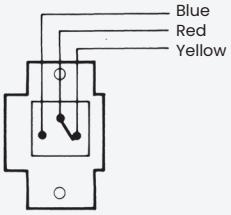

Switch shown in secure position

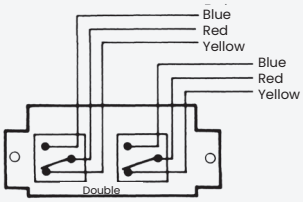

Switch shown in secure position

Model Specifications

Model #	4570-T1	4670-T1	4690-T2	4690-1-T2
Lockset	Cylindrical locks	Cylindrical locks	Concealed vertical rod exit devices	Concealed vertical rod exit devices
# Doors	Single or pair	Single or pair	Wide stile pair of doors	Narrow stile pair of doors
Compatibility (with tripper type)	Schlage 1/29" (13mm) Cyl. 5/89" (14mm) Cyl Falcon 1/29" (13mm) Cyl. 9/169" (14mm) Cyl. Adams Rite® 4510 8400 Arrow™ 1/29" (13mm) Cyl. Best® 9/169" (14mm) Cyl. Corbin Russwin® 5/89" (16mm) Cyl. Dexter® 7/169" (11mm) Cyl. Kwikset® 1/29" (13mm) Cyl. Precision™ 1040 Automatic Flush Bolt[1] Sargent® 1/29" (13mm) Cyl. Yale® 1/29" (13mm) Cyl.	Schlage 1/29" (13mm) Cyl. 5/89" (14mm) Cyl. Falcon 1/29" (13mm) Cyl. 9/169" (14mm) Cyl. Adams Rite® 4510 8400 Arrow™ 1/29" (13mm) Cyl. Best® 9/169" (14mm) Cyl. Corbin Russwin® 5/89" (16mm) Cyl. Dexter® 7/169" (11mm) Cyl. Kwikset® 1/29" (13mm) Cyl. Precision™ 1040 Automatic Flush Bolt[1] Sargent® 1/29" (13mm) Cyl. Yale® 1/29" (13mm) Cyl.	Von Duprin 3347A-F 3347A 9947 9947F	Von Duprin 3347A
Certifications			UL list (GXHX R4504) fire exit hardware	
Application Notes	1	2	3	4

[1] Special template required

Dimensions

4263

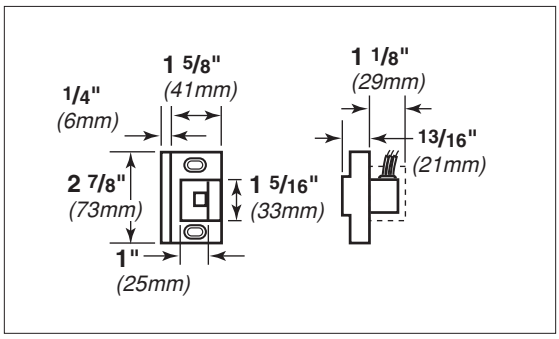

4670-T1

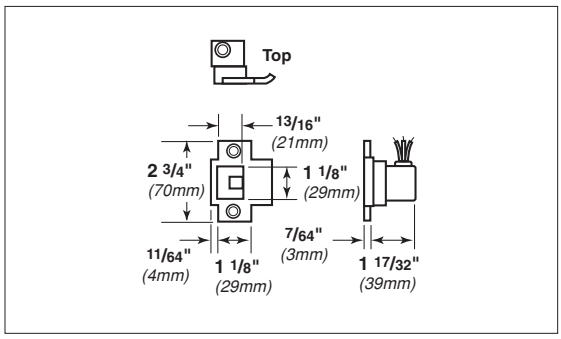

4268-T1

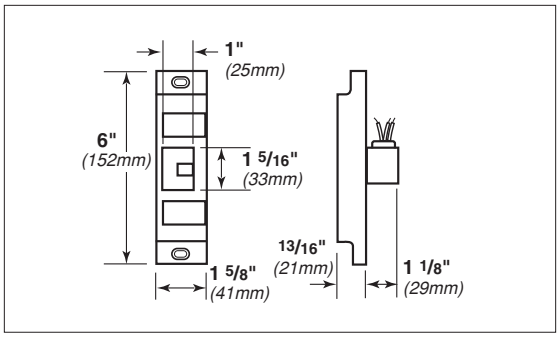

4690-T2

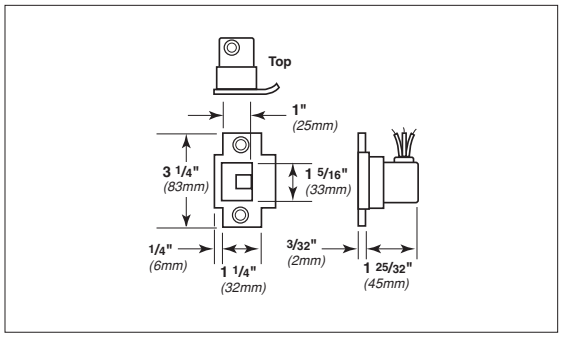

4570–T1

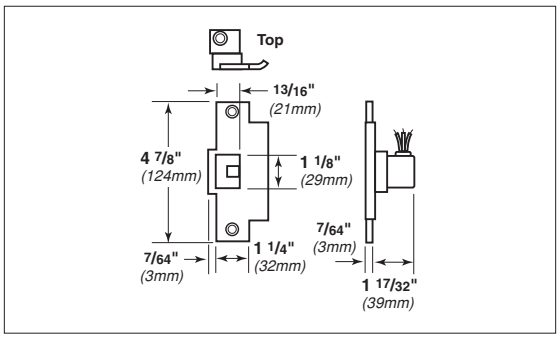

4690–1–T2

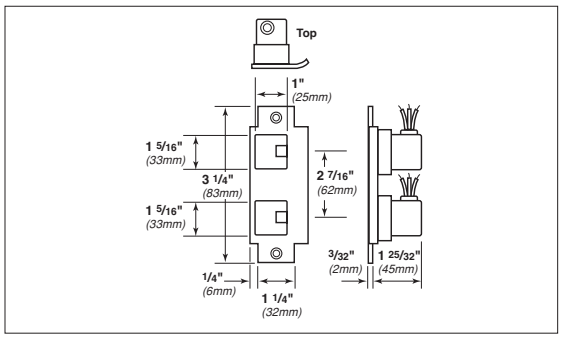

4582

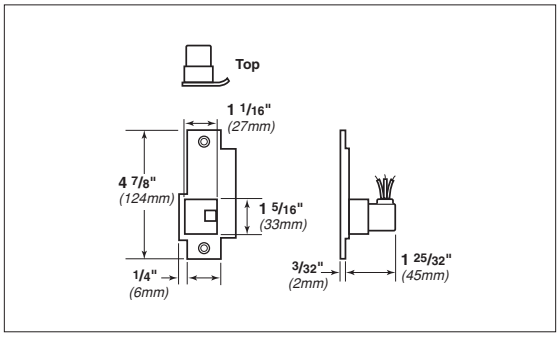

To Order Specify

- Model
- Tripper T1, T2, or T3
- Handing required on model 4582
- Specify LHR or RHR
- Finish: US3, US4, US10, US10B, US26, US26D

Allegion, the Allegion logo, Von Duprin, and the Von Duprin logo are trademarks of Allegion plc, its subsidiaries and/or affiliates in the United States and other countries. All other trademarks are the property of their respective owners.

© 2024 Allegion plc

010118, Rev. 01/24

Electrohydraulic Automatic Operators

Overview

LCN's electrohydraulic automatic operators integrate the 4000 Series mechanical closer to provide a smooth and easy manual opening experience for preliminary manual use applications. When activated, the door works as a fully functional low energy automatic operator to increase accessibility.

The low energy electric Auto Equalizer 4600 Series utilizes LCN's 4040XP mechanical closer to increase product life when the door is primarily used manually. When activated, a motor/clutch system drives the manual closer to automatically open the door.

The low energy pneumatic Auto Equalizer 4800/2600 Series provides quiet, smooth and reliable door operation and allows for use in hazardous locations where electronically operated devices are not permitted.

Features & Benefits

- UL Listed for self-closing doors without hold open under "Swinging door closers"
- Tested and certified under ANSI Standard A156.19
- ANSI Standard A117.1
- Electric Auto Equalizer has a no-destruct feature that allows clutch to slip when abused to reduce damage to the operator
- Digital control suite in electric Auto Equalizer has on-board diagnostics to ensure easy, trouble-free installation
- Pneumatic Auto Equalizer has easily adjustable air pressure and timing cycle to meet the needs of a specific installation
- Pneumatic Auto Equalizer is available in four different mounting configurations

Additional Features

	4600 Series	4800/2600 Series
Handed	No	No; Yes (2610)
Mounting options	Push (4640) Pull (4630)	Push (4820) Pull (4810) Parallel arm (4840) Concealed (2610)
On board power supply	Yes	No
Digital control box	Yes	No
Header length	33-1/2"	20"
Maintains memory after power loss	Yes	Yes
Adjustable manual open face	Yes	Yes
Blow open capability	No	Yes
Meets UL requirements	UL/cUL 325 and 228	–

All electrohydraulic operators are available in seven standard or 150+ custom powder coated finishes.

Sample Applications

Exterior Retail Entrance

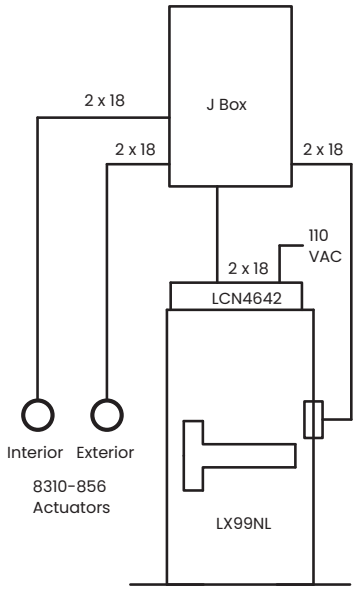

Operation: When panic device is mechanically dogged both interior and exterior actuators will be enabled through LX switch. When device is undogged actuators will not function.

Church/Library Entrance

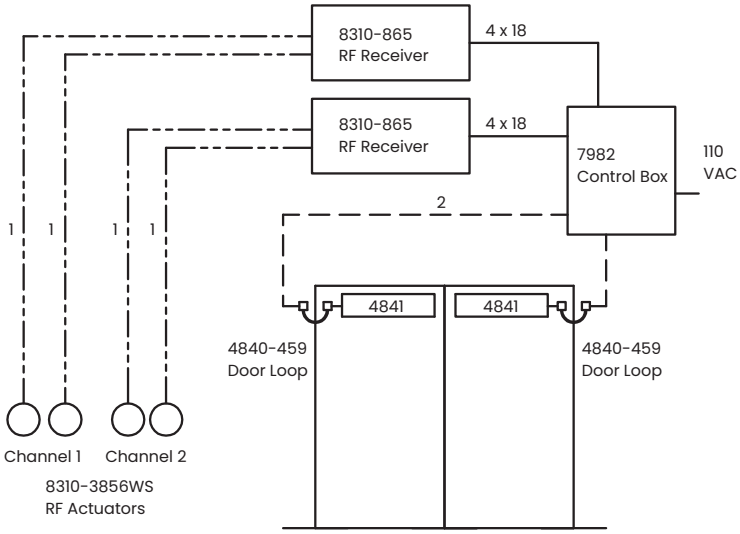

Operation: Doors normally closed, not latched. Two 8310-3856WS actuators to independently signal each door to swing.

[1] Dashed/dotted lines indicate RF signal, not a wiring connection.

[2] Dashed lines indicate pneumatic 925 tubing.

© 2024 Allegion plc
010112, Rev. 01/24

Electromechanical Automatic Operators

Overview

The LCN® electromechanical automatic operators are designed for durability and extended performance when used in primarily automatic applications. The electromechanical gearbox acts as a manual closer when the door is not automated or power is lost.

The low energy electromechanical Senior Swing (2800 and 9500 Series) is LCN's toughest operator—designed specifically for medium to heavy duty use in mostly automated applications. The Senior Swing offers a digital control suite that provides precise control of a large range of built-in functions.

The low energy Benchmark operator (9100 Series) is designed for low to medium use commercial applications, also for primarily automated applications. With its slim design, the Benchmark is great for interior door applications when aesthetics are a concern.

Features & Benefits

- UL Listed for self-closing doors without hold open, UL 325
- Tested and certified under ANSI 156.19
- ADA compliant
- Opening time from full close to backcheck is no faster than 3 seconds
- Less than 15 lbs. to open door manually
- On-board power supply (24VDC output) to power card readers, actuators and safety circuits

Additional Features

	2800 Series	9500 Series	9100 Series
Handed	Yes	Yes	No
Mounting options	Concealed 2810 (Single) 2850 (Sim. Pair) 2860 (Ind. Pair)	Surface 9530 (Push/ Single) 9540 (Push/ Single 9550 (Sim. Pair) 9560 (Ind. Pair)	Surface 9130 (Pull) 9140 (Push) 9150 (Sim./Ind. Pair)
On board power supply	Yes	Yes	Yes
Digital control box	Yes	Yes	No
Header length	Variable - See LCN catalog	36" - 49" (single) 72" - 98" (double)	27" or 36" (single) 72" (double)
Maintains memory after power loss	Yes	Yes	Yes
Push 'n go	Yes	Yes	Yes
Power Boost	Yes	Yes	Yes
Simultaneous pair with single control box	Yes	Yes	No
Meets UL requirements	UL 325/228	UL 325/228	UL 325/228

All electromechanical operators are available in aluminum and dark bronze finishes.

Electrical Data

2800, 9500 Series

- 120 VAC 60Hz input at 2.5 AMPS (2800 and 9500 Series)
- 240 VAC 50/60 Hz at 2.5 AMPS (2800 and 9500 Series)
- 24 VDC output at 1.5 AMPS (protected by self-resetting thermal fuse)

9100 Series

- 120 VAC 60Hz input at 1 AMPS
- 24 VDC output at 2.5 AMPS

Sample Applications

Secure Hospital Hallway

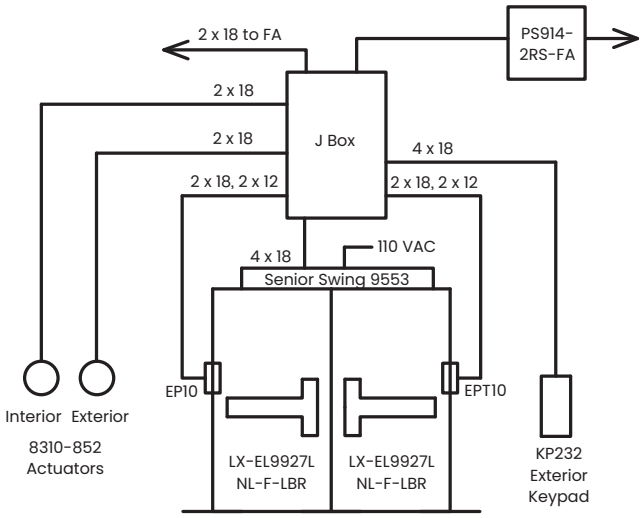

Operation: KP232 keypad exterior to signal EL latch retraction and enable exterior actuator through LX switches in panic device. Interior actuator always active.

Fire alarm to extend EL latch and disable automatic operator.

Restroom Doors

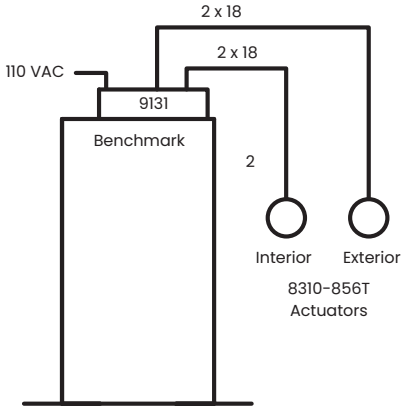

Operation: No latching at this door. For a single occupancy restroom. Either actuator will open door at any time.

© 2024 Allegion plc
010113, Rev. 01/24

Fire/Life Safety Closers/Holders Series

Overview

Sentronic Series LCN closers/holders combine heavy duty closers with electrically controlled hold-open functions to control fire and smoke barrier doors. Automatic detection and containment of fire and smoke are the best ways to minimize danger to life and property. Patented Sentronic door closer/holders are designed to hold swinging doors open in normal use then release and automatically close the doors under fire conditions. These products integrate into your complete fire and life safety system.

LCN's fire/life safety closers/holders series includes:

- SE Series - offers adjustable single-point hold-open function controlled by solenoid assembly located in the SE track
- ME Series - offers infinitely adjustable, multi-point hold-open function controlled by solenoid on the cylinder assembly
- SEM Series - Electromagnetic door holders work with manual door closer to provide single-point hold-open
- HSA Series - Best suited for high traffic emergency doors, this product provides easy passage for groups of pedestrians through high traffic doors with electronically controlled closer/holder

Features & Benefits

- Conforms to NFPA 101 and ANSI 156.15
- 24V AC/DC or 120V AC input
- When current is interrupted, hold-open releases and door closes
- Adjustable hydraulic backcheck cushions opening swing prior to 90°
- Separate regulation of general closing speed and latching speed
- Available in wide range of powder coated finishes to blend with door and frame (SEM magnets available in aluminum and dark bronze only)
- Circuit automatically handles AC or DC input
- Can be pushed safely and easily out of hold-open
- Functions as full rack and pinion door closer when hold-open is not engaged or current is interrupted
- High strength cast iron cylinder
- Forged steel main arm and piston
- All weather fluid

Holding Solenoids Current Draw

SE/ME
- 24V AC/DC (+10% - 15%) at 90 mA maximum
- 120V AC/DC (+10% - 15%) at 30 mA maximum

SEM (tri-volt)
- 12V DC (+10% - 15%) at 30 mA maximum
- 24V AC/DC (+10% - 15%) at 20 mA maximum
- 120V AC/DC (+10% - 15%) at 20 mA maximum

HSA
- 24V AC/DC (+10% - 15%) at 120 mA maximum

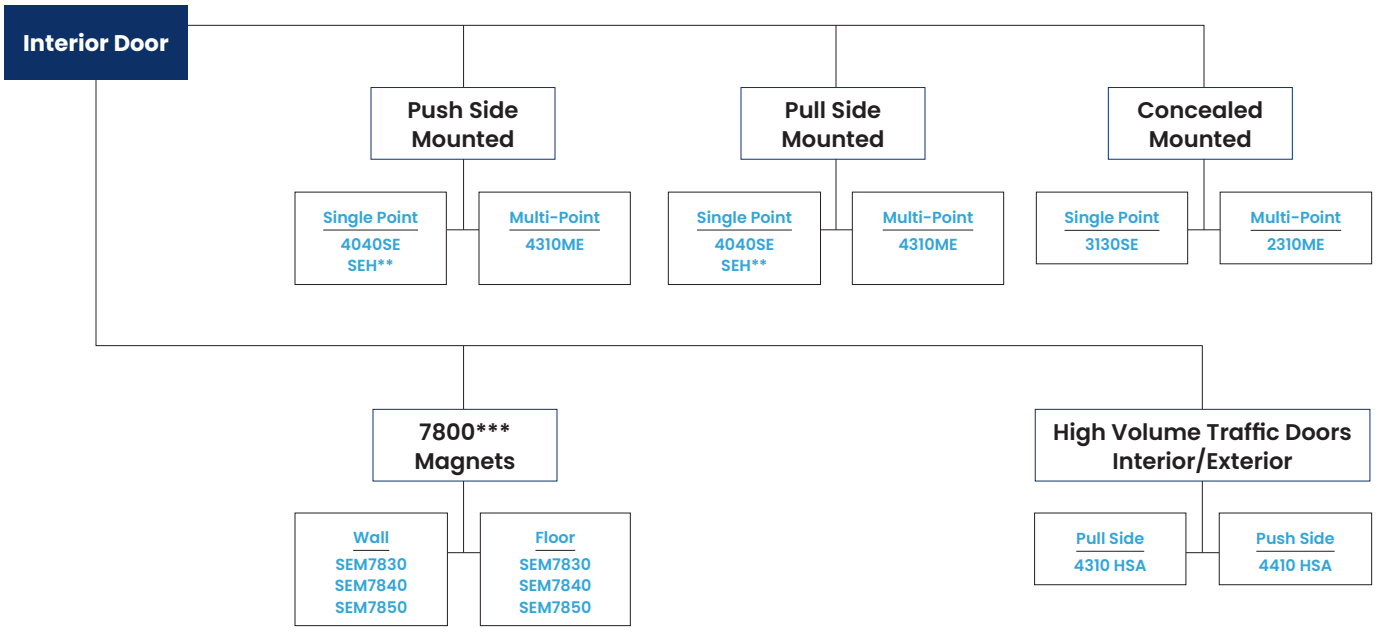

**See SEH section (cylinder not included).
***SEM 7800 Series are die cast.

© 2024 Allegion plc
010115, Rev. 01/24

Actuators & Sensors

Overview

LCN actuators and sensors are designed to be used with LCN automatic operators. The desired function, traffic patterns and physical design of the opening will determine the type of actuator used.

Safety and activation sensors are designed to protect pedestrians and help prolong the life of an automatic operator. LCN safety sensors can be used on all automatic operators.

LCN also offers a full line of activation device accessories, including surface and flush mounted boxes, weather rings, escutcheons, wireless transmitters and receivers (1 channel), key chain activation devices (up to 4 buttons), sequencers, and a bollard post (used with 4-3/4" square actuator.)

Features & Benefits

- Complies with ANSI 156.19
- Can be ordered individually or in kits that combine common products for a specific application
- Beveled edges provide a tamper and vandal resistant solution to push plate needs, allowing no room for objects to get between plate and mounting box
- An all-active plate activates with any “push” location
- Stainless steel finish will not deteriorate or rust where it is touched — scratch and scuff resistant
- All activation push plates are available with ADA logo art and text or with ADA logo art only
- Text and ADA Compliant logo art are baked onto the surface for added durability
- Active-style wheelchair push plates now available

Stainless Steel Push Plates

Round push plates

6" Round style push plate

4-1/2" Round style push plate

Square push plates

4-3/4" Square style push plate

Jamb push plates

Jamb style push plate

Dual jamb style push plate

Ready Mount Actuators

6" Slim profile push plate

4-3/4" Square style push plate

36" x 6" Full length actuator

Touchless Actuators

8310-810R

8310-813R

8310-815

Sensors

Door Mount Safety Sensor

Header Mount Safety sensor

Monitored Safety Sensor Kit

Actuator Accessories

LCN offers a full line of activation device accessories, including: surface and flush mounted boxes, weather rings, escutcheons, wireless transmitters and receivers (1 channel), key chain activation devices (up to 4 buttons), sequencers, and a bollard post (used with 4-3/4" square actuator).

Mounting boxes

Weather rings

Bollard post

Wireless transmitters/receivers

© 2024 Allegion plc
010114, Rev. 01/24

Readers

This section of the Electronic Access control catalog covers Schlage mobile enabled multi-technology, multi-technology, smart, proximity, keypad and enrollment readers and accessories.

Overview

Schlage® readers offer a complete solution that features functionality allowing for an effortless migration path from legacy cards to future technologies, including NFC and Bluetooth® mobile credentials.

Benefits

- Adaptability
  - Extensive range to accommodate any business requirement
  - NFC mobile credentials in Apple Wallet® and Google Wallet™, Bluetooth mobile and MIFARE®
- Flexibility
  - Compatible with Schlage and other industry manufacturers' credentials and functionality for effortless migration to the latest credential technology
- Reliability
  - Limited lifetime warranty

Schlage Credential Services

At Schlage, we understand that credentials are the key to a successful access control plan. And we know that some solutions available in the market today can lock you into a proprietary path that limits your options in the future. That is why we offer Schlage Credential Services with programs that are designed to provide you with a whole new level of security, adaptability and flexibility.

Services include:

- Custom encryption keys
- Schlage standard encryption keys
- CardTrax™
- Custom format consulting
- Custom artwork

Check out our Schlage Credential Services

Allegion, the Allegion logo, Schlage and the Schlage logo are trademarks of Allegion plc, its subsidiaries and/or affiliates in the United States and other countries. All other trademarks are the property of their respective owners.

Multi-Technology Readers

Schlage multi-technology readers are designed to simplify your access control solutions and allow a transition from existing population proximity or magnetic stripe to more secure encrypted card technology at your own pace—without having to change readers as new technologies are available. Five available models to fit any need and works with multiple form factors including wristbands, cards, fobs and tags.

- **MT11:** Mullion mount multi-technology reader
- **MT15:** Single gang mount multi-technology reader
- **MTK15:** Single gang mount multi-technology reader with keypad reader
- **MTMS15:** Single gang mount multi-technology reader with magnetic stripe reader
- **MTMSK15:** Single gang mount multi-technology reader with magnetic stripe reader and keypad

Mobile Enabled Multi-Technology Readers

Schlage mobile enabled multi-technology readers are designed to simplify your access control solutions and ease the transition from an existing proximity system to a secure encrypted card technology or mobile solution at your own pace—without having to change readers. Three models are available to fit any need and operate with multiple credential form factors including wristbands, cards, fobs and tags.

- **MTB11:** Mobile enabled; Mullion mount
- **MTB15:** Mobile enabled; Single gang mount
- **MTKB15:** Mobile enabled; Single gang mount with keypad
- Schlage multi-technology readers contain NFC mobile, 125 kHz proximity and 13.56 MHz contactless smart card capability in one unit, handling multiple formats simultaneously; mobile enabled models can also read 2.4 GHz Bluetooth mobile credentials; OSDP verified
- Wiegand and RS-485 output available for simple interface with most access control panels
- Compatible with NFC-open smart devices
- Limited lifetime warranty
- See datasheet for additional features
- Choose -485 models for applications requiring approval by the U.S. Government under HSPD-12 for FIPS201-1 and FIPS201-2[1] as PIV transparent readers.

Smart Readers

The Schlage SM10 mini-mullion smart reader is one of the most secure readers in the industry. Instead of using open transmission protocols, the SM10 smart card reader utilizes high security data. Each message between the card and the reader is digitally signed using message authentication coding (MAC) to ensure the integrity of the data.

- 13.56 MHz contactless smart card capability and can also read NFC wallet-based mobile credentials
- In addition, smart reader technology can be used in applications such as logical access, cashless vending and cafeteria services.

Enrollment Readers

The Schlage® MT20W multi-technology enrollment reader is designed to simplify the enrollment of smart and multi-technology credentials in "No-Tour" multifamily applications. Site administrators use the MT20W to program encrypted credentials, such as a keyfob, over Wi-Fi or USB connection to PC. When presented at a lock by the resident or user, the pre-programmed credentials automatically update the lock database. This eliminates the need for the property staff to have to visit each lock to deliver updates.

The MT20W is compatible with Schlage smart credentials (MIFARE Classic®, MIFARE Plus® and MIFARE® DESFire®) and supports no-tour access control when used with supported locks.

Proximity Readers

Schlage's low-frequency proximity reader is an approachable solution that integrates seamlessly with access control systems. Schlage's proximity readers are sleek, compact and provide a cost-effective option for applications requiring lower security. The mini-mullion design makes the readers ideal for installation in tight spaces. The PR10 recognizes most industry leading 125 kHz proximity credentials and can be easily integrated into existing legacy proximity systems.

- **PR10:** Mini-Mullion Mount
- Reads 125 kHz proximity credentials
- Wiegand output for simple interface with most access control panels
- LED (red, green or amber) visual indicator and other industry manufacturers' credentials
- Limited lifetime warranty
- Compatible with Schlage and other industry manufacturers' credentials
- See datasheet for additional features

Additional Supporting Readers

Schlage offers an extensive range of reader technologies to meet any business need. Complementing the Schlage multi-technology, smart technology and proximity technology reader options include: keypads, scramble keypads, magnetic stripe, and bar code readers and encoders.

- OEM200
- SERIII-W Scramble Keypad Reader
- SEKPDWG Electronic Keypad Reader
- SEKPDMGW Electronic Keypad Reader
- CL-ENCODER2 Magnetic Stripe Credential Encoder
- MT20 Multi-Technology Enrollment Reader for ENGAGE™ solution
- MT20W Multi-Technology Enrollment Reader for ENGAGE™ No-Tour solution

1. See FIPS201 Compliant Readers Data Sheet for additional details.

© 2024 Allegion plc
005025, Rev. 10/24

Mobile Enabled Multi-Technology Readers

Overview

The Schlage® mobile enabled multi-technology readers are designed to simplify your access control solutions and ease the transition from an existing proximity system to a secure, encrypted card technology or mobile solution at your own pace—without having to change readers. Three available models fit any need and operate with multiple credential form factors including wristbands, cards, fobs and tags.

- **MTB11:** Mullion mount mobile enabled multi-technology reader
- **MTB15:** Single gang mount mobile enabled multi-technology reader
- **MTKB15:** Single gang mount mobile enabled multi-technology with keypad reader

Encryption Key & Credential Interoperability

- Hardware configured with our default encryption key or custom key developed by Schlage Custom Encryption Key Service (SCEKS) including NXP, HID® and NFC
- Schlage MIFARE® DESFire® and MIFARE Classic® credentials
- NFC mobile credentials in Apple Wallet® and Google Wallet™
- HID iCLASS®, iCLASS SE® and SEOS® plastic and NFC Mobile Credentials
- Schlage Mobile Bluetooth® Credential
- Other competitive credentials (see the Credential Compatibility Guide)

Schlage Credential Services

- CardTrax™ credential format sequencing service offering industry standard formats
- Custom format development

Color Options

Black (standard)

Cream

Features & Benefits

- Multi-technology platform offers support for a wide range of credential technologies including mobile (2.4 GHz) Bluetooth and NFC, high-frequency (13.56 MHz) smart and low-frequency (125 kHz) proximity
- Supports Bluetooth and NFC wallet-based credentials
- OSDP, RS485, Wiegand support
- Plug & Play mode for straight out of the box functionality
- Commission via ENGAGE™ mobile app for reader updates and easy configuration.
- Broad voltage range of 5V to 28V for simplified power management
- Accommodates interior, exterior, metal and non-metal installation environments
- Improved quick-connect cable allows for easy installation
- Easy-to-install mounting bracket
- Available finishes include: Black (standard) and cream

Check out our Schlage Credential Services

Model	MTB11	MTB15	MTKB15
Reader type	Mobile enabled multi-technology	Mobile enabled multi-technology	Mobile enabled multi-technology with keypad
Mounting style	Mullion	Single gang	Single gang
Standards	ISO 14443A, ISO 15693		
Certifications	FCC Certification - IC Certification - UL 294/cUL Listed - RED Directive - CE Mark - IP65 - REACH - Bluetooth SIG - RoHS 3		
Frequency	2.4 GHz, 13.56 MHz and 125 kHz		
FIPS 201 compliant	No		
Technology supported[5]			
CSN[1]	●	●	●
Proximity[2]	●	●	●
Smart[3]	●	●	●
Mobile (NFC)[4]	●	●	●
Mobile (Bluetooth)[4]	●	●	●
Read range (Based on ISO Card form factor)			
Prox FSK	Up to 2.25" (5.7 cm)	Up to 4.5" (11.4 cm)	Up to 4.5" (11.4 cm)
Prox ASK	Up to 2.0" (5.1 cm)	Up to 3.75" (9.5 cm)	Up to 3.75" (9.5 cm)
MIFARE Classic® EV1	Up to 2" (5.1 cm)	Up to 2.25" (5.7 cm)	Up to 2.25" (5.7 cm)
MIFARE Plus®	Up to 1" (2.5 cm)	Up to 1.5" (3.8 cm)	Up to 1.5" (3.8 cm)
MIFARE® DESFire® EV1/EV3	Up to 1.25" (3.2 cm)	Up to 1.75" (4.4 cm)	Up to 1.75" (4.4 cm)
MIFARE® DESFire® EV2	Up to 2" (5.1 cm)	Up to 2.25" (5.7 cm)	Up to 2.25" (5.7 cm)
Schlage Mobile Credential (Bluetooth) (short range-standard)	Up to 5' (1.5 m)	Up to 5' (1.5 m)	Up to 5' (1.5 m)
Schlage Mobile Credential (Bluetooth) (long range-optional)	Up to 30' (9.1 m)	Up to 30' (9.1 m)	Up to 30' (9.1 m)
System interface	Wiegand / Clock & Data / RS-485 (OSDP, OSDP Secure)		
Voltage range	5-28 VDC		
Current requirements	80mA Average (190mA Peak) @12V 45mA Average (100mA Peak) @24V	80mA Average (190mA Peak) @12V 45mA Average (100mA Peak) @24V	80mA Average (200mA Peak) @12V 45mA Average (105mA Peak) @24V
Pigtail specification	22 AWG, 12 conductor, 12" length		
Tamper	Yes		
Physical dimensions	5.91" x 1.72" x 0.81" 15 cm x 4.4 cm x 2.1 cm	5.1" x 3.25" x 0.76" 12.9 cm x 8.3 cm x 1.9 cm	5.1" x 3.25" x 0.76" 12.9 cm x 8.3 cm x 1.9 cm
Operating temperatures	-40° to 158° F (-40° to 70° C)		
Weight	3.8 oz	6.0 oz	6.1 oz

1. DESFire® CSN, HID iCLASS® CSN, Inside Contactless PicoTag® CSN, ST Microelectronics® CSN, Texas Instruments Tag-It® CSN, Phillips I-Code® CSN.
2. Schlage® Proximity, HID® Proximity up to 37 bit lengths, GE/CASI® Proximity, AWID® Proximity, LenelProx®.
3. Schlage smart cards using MIFARE Classic® EV1, Schlage smart cards using MIFARE Plus®, Schlage smart cards using MIFARE® DESFire® EV1, Schlage smart cards using MIFARE® DESFire® EV2, Schlage smart cards using MIFARE® DESFire® EV3.
4. Compatible with Bluetooth and NFC-enabled smartphones.
5. For more detail, see Schlage Credentials Compatibility Guide for readers and locks.

Allegion, the Allegion logo, Schlage, and the Schlage logo are trademarks of Allegion plc, its subsidiaries and/or affiliates in the United States and other countries. All other trademarks are the property of their respective owners.

© 2024 Allegion plc

013251, Rev. 10/24

Multi-Technology Readers

Overview

Schlage® multi-technology readers are designed to simplify your access control solutions and allow a transition from existing population proximity or magnetic stripe to more secure encrypted card technology at your own pace—without having to change readers as new technologies are available. Five available models to fit any need and works with multiple form factors including wristbands, cards, fobs and tags.

- **MT11:** Mullion mount multi-technology reader
- **MT15:** Single gang mount multi-technology reader
- **MTK15:** Single gang mount multi-technology reader with keypad reader
- **MTMS15:** Single gang mount multi-technology reader with magnetic stripe reader
- **MTMSK15:** Single gang mount multi-technology reader with magnetic stripe reader and keypad

Encryption Key & Credential Interoperability

- Hardware configured with our default encryption key or custom key developed by Schlage Custom Encryption Key Service (SCEKS) including NXP, HID® and NFC
- Schlage NFC mobile credentials
- NFC mobile credentials in Apple Wallet® and Google Wallet™
- Competitive NXP and NFC mobile credentials configured with custom encryption keys
- Schlage proximity credentials
- Other competitive credentials (see the Credential Compatibility Guide)

Schlage Credential Services

- CardTrax™ credential format sequencing service offering industry standard formats
- Custom format development

Color Options

Black (standard) | Cool tone gray | Cream | Warm tone brown

Note: Lead time may apply for non-standard colors.

Features & Benefits

Multi-technology platform offers support for both high-frequency (13.56 MHz) smart and low-frequency (125 kHz) proximity credentials.

- Supports NFC wallet-based credentials
- Wiegand and RS-485 support
- Limited lifetime warranty
- Accommodates interior, exterior, metal and non-metal installation environments
- Quick-connect cable allows for easy installation
- Easy-to-install mounting bracket
- Available finishes include: black (standard), cool-tone gray, cream and warm-tone brown

Check out our Schlage Credential Services

Multi-Technology Readers

Model[1]	MT11		MT15	MTK15	MTMS15	MTMSK15
Reader type	Mullion		Single gang	Keypad single gang	Magnetic stripe	Magnetic stripe and keypad
Frequency	13.56 MHz and 125 kHz				13.56 MHz and 125 kHz and magnetic stripe	
FIPS 201-1 & 201-2 compliant	Yes, requires RS-485 interface–See Schlage FIPS 201 Compliant Readers Datasheet for details					
Standard default PIV output	75 bit PIV[2]					
Standards	SO 14443A, 14443B, 15693					
Certifications	FCC Certification • IC Certification • UL 294 Listed • RED Directive (15 EU Countries) • CE Mark • IP65					
Voltage range	5-16 VDC					
Power supply	Linear DC					
Current requirement (at 12 VDC and 25 C; mAmps)	MT11 Avg. 100 mA Peak 170 mA	MT11-485 Avg. 115 mA Peak 145 mA	MT15 & MT15-485 Avg. 120 mA Peak 200 mA	MTK15 & MTK15-485 Avg. 120 mA Peak 230 mA	MTMS15 & MTMS15-485 Avg. 120mA Peak 200mA	MTMSK15 & MTMSK15-485 Avg. 120mA Peak 230mA
Technology supported[3]						
CSN[4]	●		●	●	●	●
Proximity[5]	●		●	●	●	●
Smart[6]	●		●	●	●	●
Mobile (NFC)[7]	●		●	●	●	●
Read range	Proximity: Up to 5" (12.7 cm) MIFARE Classic: Up to 4" (10 cm MIFARE Plus: Up to 1" (2.5 cm) MIFARE DESFire EV1 / EV3: Up to 2" (5.1 cm) PIV credential: Up to 2.5" (6.5 cm)					
Cable specification	18 AWG, 5 conductor stranded/shielded					
System interfaces	Wiegand / Clock & Data / RS-485[8] (OSDP)					
Cabling distance	Wiegand output: 500 ft (152 m)					
Physical dimensions (H x W x D)	5.91" x 1.72" x 0.81" 15 cm x 4.4 cm x 2.1 cm		5.1" x 3.25" x 0.76" 12.9 cm x 8.3 cm x 1.9 cm	5.1" x 3.25" x 0.76" 12.9 cm x 8.3 cm x 1.9 cm	5.17" x 4.43" x 1.15" 13.13 cm x 11.25 cm x 2.92 cm	5.17" x 4.43" x 1.15" 13.13 cm x 11.25 cm x 2.92 cm
Operating temperatures	-40° to 158°F (-40° to 70°C)		-40° to 158°F (-40° to 70°C)	-40° to 158°F (-40° to 70°C)	-31° to 151°F (-35° to 67°C)	-31° to 151°F (-35° to 67°C)
Weight	5.7 oz		9.1 oz	9.3 oz	8.9 oz	9.5 oz
Material	PBT Polymer					

1. Some features and benefits listed on the front may not be applicable to the smart-only and proximity-only readers.
2. Other output options available through configuration.
3. For more detail, see Schlage Credentials Compatibility Guide for readers and locks.
4. DESFire® CSN, HID iCLASS® CSN, Inside Contactless PicoTag® CSN, ST Microelectronics® CSN, Texas Instruments Tag-It® CSN, Phillips I-Code® CSN.
5. Schlage® Proximity, HID® Proximity up to 37 bit lengths, GE/CASI® Proximity, AWID® Proximity, LenelProx®.
6. Schlage smart cards using MIFARE Classic® EV1, Schlage smart cards using MIFARE Plus®, Schlage smart cards using MIFARE® DESFire® EV1, Schlage smart cards using MIFARE® DESFire® EV2, Schlage smart cards using MIFARE® DESFire® EV3.
7. Compatible with Bluetooth and NFC-enabled smartphones.
8. RS-485 model numbers include "-485" after the original model number. For example, MT11-485 is the RS-485 version of the multi-technology mini-mullion reader. Multi-drop, Open Standard Device Protocol (OSDP).

Allegion, the Allegion logo, Schlage, and the Schlage logo are trademarks of Allegion plc, its subsidiaries and/or affiliates in the United States and other countries. All other trademarks are the property of their respective owners.

© 2024 Allegion plc

005354, Rev. 10/24

Single Technology Readers

Overview

Schlage's SM10 smart technology and PR10 proximity readers are sleek, compact and cost-effective. The SM10 is compatible with Schlage NFC Mobile and 13.56 MHz credentials including MIFARE Classic® and MIFARE® DESFire® and is recommended for mid-level to high security applications where secure, encrypted technology is required. The PR10 is compatible with 125 kHz low frequency credentials and can be used for low to midlevel security applications. The mini-mullion design allows for these readers to fit into almost any application.

Features & Benefits

- Reduced model lineup and one size fits all reader offering limits complexity
- Limited lifetime warranty
- Accommodates interior, exterior, metal and non-metal installation environments
- Quick-connect cable allows for easy installation
- Easy-to-install mounting bracket
- PR10 is a cost-efficient reader used in 125 kHz proximity applications
- SM10 can support 13.56 MHz and NFC wallet-based mobile secure technologies in higher security applications

Check out our Schlage Credential Services

Model	PR10	SM10
Reader type	Proximity	Smart
Mounting style	Mini-mullion	Mini-mullion
Standards	N/A	ISO 14443A, 14443B, 15693
Certifications	FCC certification; IC certification; UL 294 listed; RED directive; CE Mark; IP65-rated	
Credential frequency supported	125 kHz	13.56 MHz
Technology supported[1]		
Proximity[2]	●	
CSN[3]		●
Smart[4]		●
Mobile (NFC)[5]		●
Read range	Proximity Up to 3" (7.5 cm)	Schlage MIFARE®: Up to 3" (7.5 cm) Schlage MIFARE® DESFire® EV1/EV2/EV3: Up to 2" (5.1 cm) NFC: Up to 2" (5.1 cm)
System interface	Wiegand	Wiegand / Clock and Data
Voltage range	5-16 VDC	
Current requirements	Average: 65 mA Peak: 110 mA	Average: 95 mA Peak: 195 mA
Dimensions (HxWxD)	4.26" x 1.72" x 0.81" 10.8 cm x 4.4 cm x 2.1 cm	
Operating temperatures	-31 to 151F (-35 to 67C)	
Weight	4.1 oz	3.9 oz
Material	PBT polymer	

1. For more detail, see Schlage Credentials Compatibility Guide for readers and locks.
2. Schlage® Proximity, HID® Proximity up to 37 bit lengths, GE/CASI® Proximity, AWID® Proximity, LenelProx®.
3. DESFire® CSN, HID iCLASS® CSN, Inside Contactless PicoTag® CSN, ST Microelectronics® CSN, Texas Instruments Tag-It® CSN, Phillips I-Code® CSN.
4. Schlage smart cards using MIFARE Classic® EV1, Schlage smart cards using MIFARE Plus®, Schlage smart cards using MIFARE® DESFire® EV1, Schlage smart cards using MIFARE® DESFire® EV2, Schlage smart cards using MIFARE® DESFire® EV3.
5. Compatible with Bluetooth and NFC-enabled smartphones.

Color Options

- Black (standard)
- Cool tone gray
- Cream
- Warm tone brown

Allegion, the Allegion logo, Schlage and the Schlage logo are trademarks of Allegion plc, its subsidiaries and/or affiliates in the United States and other countries. All other trademarks are the property of their respective owners.

© 2024 Allegion plc

013788, Rev. 10/24

FIPS 201 Compliant Readers

Overview

Schlage® multi-technology readers have been approved by the U.S. Government under HSPD-12 for FIPS 201-1 and FIPS 201-2* compliance as PIV transparent readers. PIV compliance is available on five reader models, including the MT11-485 multi-technology mullion, MT15-485 multi-technology, MTK15-485 multi-technology with keypad, MTMS15-485 multi-technology with magnetic stripe and MTMSK15-485 multi-technology with magnetic stripe and keypad.

Schlage multi-technology readers are a unique and critical component of successful security upgrades in all sectors of the government. FIPS 201-1 and 201-2 are Federal Information Processing Standards ("FIPS") developed by the National Institute of Standards and Technology ("NIST") to satisfy the requirements of HSPD-12, a Homeland Security Presidential Directive. One of the main objectives of HSPD-12 is to ensure government-wide interoperability for information technology and security through the implementation of a range of federal standards and product requirements. FIPS 201 seeks to improve identification and authentication of federal employees and contractors for access to the federal facilities and information systems.

Schlage FIPS 201 PIV compliant readers are available with multiple data output formats, which provide unprecedented versatility within the PIV and PIV-I specification.

In addition to reading approved FIPS 201-1 and 201-2 PIV and PIV-I credentials, Schlage smart and multi-technology readers are also compatible with many standard proximity and leading smart card technologies (see specifications). The ability to read multiple existing card types and PIV and PIV-I cards simultaneously is a tremendous benefit to those agencies looking to transition seamlessly from older proximity technologies to new, mandated PIV and PIV-I credentials. A mixed population of old proximity credentials and new PIV and PIV-I credentials is unavoidable during the government's multi-year upgrade path to FIPS 201 compliance.

GSA FIPS 201 APPROVED

* Disclaimer: FIPS201-1 certification is standard with all Schlage and Schlage readers noted. FIPS201-2 certification is tested and listed in conjunction with a full access control system, including panel, reader, and software components. For a full list of full access control systems that are certified with Schlage and Schlage readers, please refer to the APL at idmanagement.gov.

Features & Benefits

- Compatibility: compatible with industry standard magnetic stripe technology (tracks 1, 2, or 3) and 125 kHz and 13.56 MHz contactless technologies
- Read range: up to 6" (proximity), up to 2" for PIV and PIV-I credentials
- Tri-state LED (red, green, amber): visual indicator and audio feedback representing status and activity information
- Tamper detection
- Environment: accommodates interior, exterior, metal and non-metal installation environments

Check out our Schlage Credential Services

Additional features

- **Compliance:** compatible with applicable ISO standards
- **Warranty:** limited lifetime against defective workmanship and materials

Additional Technologies Supported

- Magnetic stripe
  - Track 1, 2, or 3
- Proximity
  - Schlage
  - HID® Proximity[1] (certain formats)
  - GE/CASI ProxLite™
  - AWID® Proximity
- Smart card (secure sector only)
  - Schlage MIFARE Classic®
  - Schlage MIFARE Plus®
  - Schlage MIFARE® DESFire®
  - PIV and PIV-I
- Smart card (card serial number only)
  - DESFire® application HID iClass®
  - Inside contactless PicoTag™

Ordering Information

- **MT11-485** - Multi-technology mullion reader
- **MT15-485** - Multi-technology single gang reader
- **MTK15-485** - Multi-technology with keypad single gang reader
- **MTMS15-485** - Multi-technology magnetic stripe reader
- **MTMSK15-485** - Multi-technology with magnetic stripe reader and keypad

Note: A Schlage CE configuration card is required based on credential requirements. Schlage PIV readers have been approved by the GSA lab as compliant with FIPS 201-1 and the appropriate PIV credentials.Please see Schlage multi-technology readers data sheet for specific technical information.

1. Proximity bit lengths greater than 37 not supported.

Allegion, the Allegion logo, Schlage, and the Schlage logo are trademarks of Allegion plc, its subsidiaries and/or affiliates in the United States and other countries. All other trademarks are the property of their respective owners.

© 2024 Allegion plc

004256, Rev. 01/24

Reader Accessories

Reader cover style C1

Reader cover style C2

Overview

Schlage® offers a variety of accessories and replacement parts to ensure your readers are always performing well.

Reader Covers

Replacement reader covers can be used to replace faded or cracked covers and to change the color of your readers along with any updates to the facility's décor. We offer four color options — black, cream, cool tone gray and warm tone brown. Please note that the MTB Series is only available in Black (standard) and cream.

Cosmetic Backplate Covers

While replacing legacy readers with Schlage readers, the footprint of the legacy reader may be larger than that of the new reader. Cosmetic backplate covers accommodate this issue. Available in three sizes, our cosmetic backplate covers are designed to cover holes and unpainted areas that you do not wish to invest time and money to repair.

Quick-Connect Cable

The quick connect cable allows the installer to connect the necessary reader wires without the hassle of a reader case hanging off the other end. Simply connect the wiring harness and plug the reader in, it's that easy. Every reader already comes with a quick-connect cable, but you can order the cable separately if you need extras, or to convert wiring with an adapter from MT to MTB.

Other Accessories

Following repeated use, the magnetic stripe read head in a reader can wear down. We offer a replacement magnetic stripe read head for our Schlage multi-technology magnetic stripe readers.

Reader mounting backplates are designed as a quick mounting bracket for a simplified installation process. Every reader comes with a reader backplate, but you can also order these separately if you need replacements and extras.

Color Options

- Black (standard)
- Cool tone gray
- Cream
- Warm tone brown

Note: MTB Series covers only available in Black (standard) and Cream. C2 cover style only available in Black.

Cosmetic Backplate Covers

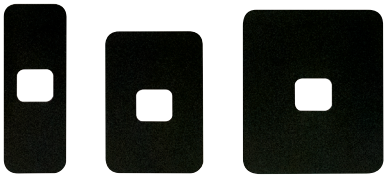

Quick-Connect Cable

MT *MTB* *MT to MTB*

Check out our Schlage Credential Services

Reader Model		PR10 & SM10	MT11 / MTB11	MT15 / MTB15	MTK15 / MTKB15	MTMS15	MTMSK15
MT Series part number	Black C1	47317553	47317557	47317563	47317569	47317575	47317579
	Black C2	N/A	47744033-SCH	47744034-SCH	47744035-SCH	N/A	N/A
	Brown	47317554	47317559	47317565	47317571	47317576	47317580
	Gray	47317555	47317560	47317566	47317572	47317577	47317581
	Cream	47317556	47317561	47317567	47317573	47317578	47317582
MTB Series part number	Black C1	N/A	47317558	47317564	47317570	N/A	N/A
	Black C2	N/A	47744033-SCH-B	47744034-SCH-B	47744035-SCH-B	N/A	N/A
	Cream	N/A	47317562	47317568	47317574	N/A	N/A
Reader type	N/A	Mini-mullion	Mullion	Single gang	Single gang with keypad	Magnetic stripe	Magnetic stripe with keypad
Dimensions (HxWxD)	N/A	4.26" x 1.72" x 0.81"	5.91" x 1.72" x 0.81"	5.1" x 3.25" x 0.76"	5.1" x 3.25" x 0.76"	5.17" x 4.43" x 1.15"	5.17" x 4.43" x 1.15"
Material	N/A	PNT polymer	PNT polymer	PNT polymer	PNT polymer	PNT polymer	PNT polymer

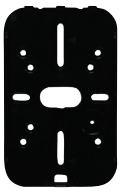

Part	Cosmetic Backplate Cover		Quick Connect Cable/Pigtail	Magnetic Stripe Read Head	Mounting Backplate	
Part number	Mini-mullion/ mullion	CP-11	MT Series pigtail 18 inches - 23846462 MTB Series pigtail 12 inches - 47265286 Adapter cable, MT connector to MTB reader - 47569692	47252693	Mini-mullion	23846355
					Mullion	23846397
	Single gang	CP-15			Single gang	23846439
	Mid range	CP-21			Magnetic stripe	24152654
Dimensions	Mini-mullion/ mullion	6.70" x 2.50"	N/A	N/A	5.10" x 3.25" x 0.76"	
	Single gang	5.65" x 3.85"				
	Mid-range	6.45" x 5.50"				

Allegion, the Allegion logo, Schlage, and the Schlage logo are trademarks of Allegion plc, its subsidiaries and/or affiliates in the United States and other countries. All other trademarks are the property of their respective owners.

© 2024 Allegion plc

009621, Rev. 10/24

Enrollment Readers

Overview

Schlage® offers a comprehensive portfolio of electronic access control solution products. Create a simple enrollment process with the Schlage CRM2 magnetic stripe enrollment reader, Schlage CRP2 proximity enrollment reader or the Schlage MT20 USB multitechnology enrollment reader with ENGAGE technology.

Features & Benefits

CRM2 Magnetic Stripe Credential Enrollment Reader

- Design allows easy enrollment of credentials into the Schlage Express access control system (version 4.0 and higher)
- Eliminates the need for manual data entry and provide error-free identification and security throughout the facility
- Allows for keystrokes to be added before and after the card's data, providing flexibility and data customization
- Reads data from any data track location on the card
- USB connectivity
- Plug-and-play functionality

The Schlage MT20 Multi-Technology Enrollment Reader

- Design simplifies the enrollment of smart and multi-technology credentials
- Access rights can be assigned to a user without property staff having to visit the lock
- USB cable powers the device
- Use Wi-Fi connection for enrollment including no-tour credentials
- Use a computer and the ENGAGE web app to easily enroll credentials
- Recognizes Schlage smart and multi-technology credentials
- Limited Lifetime Warranty

Check out our Schlage Credential Services

Model	MT20
Reader type	USB
Software and operating system requirements	N/A - USB
Bit formats recognized	26A, 32X, 34N, 34S, 35C, 37X, 37H, 40X
Technologies supported	Schlage Proximity HID® Proximity GE/CASI ProxLite® AWID® Proximity LenelProx® Schlage MIFARE Classic® Secure Sector Schlage MIFARE Plus® Secure Sector Schlage MIFARE® DESFire® with PACSA Secure Sector DESFire® CSN HID iClass® CSN Inside Contactless PicoTag® CSN ST Microelectronics® CSN Texas Instruments Tag-It® Serial Number Phillips I-Code® CSN
Physical dimensions (L x W x H)	5.56" x 2.00" x .695"
Operating temperatures	32° to 104° F (0° to 40° C)
Weight	4.1 oz
Power supply	Connect to powered USB port or via USB power supply
Interface	USB
Current requirement	160 mA
Default configuration	CE-401-073, for use with ENGAGE web applicaton
Octal output	CE-401-061, for use with SMS Express
FC/BID output	CE-401-060 (SUSB89 default,) for use as keystroke emulator
BID only	CE-401-069, for use as keystroke emulator

Model	CRM2
Desktop dimensions (H x W x D)	3.674" x 1.325" x 1.193" (93.32 x 33.65 x 30.3 mm); Optional base: 3.375" x 3.5" x 0.5" (86 x 89 x 13 mm)
Desktop weight	4.6 oz (136 g); Base: 13 oz (369 g)
Media thickness	0.015" (0.127 mm) to 0.038" (1.14 mm)
Slot width	0.040" (1.0 mm)
Swipe speed	3 to 60 inches per second, bi-directional
Power supply and interface	USB: self-powered; RS-232 [DB9F] model: 5V supplied by either PS/2 keyboard pass-through or USB power tap
Indicators	Tri-state LED, beeper
Operating temperature range	32° to 131°F (0° to 55°C)
Operating humidity range	5% to 95% relative humidity, non-condensing
Storage temperature range	-22° to 158°F (-30° to 70°C)
Cable length	6 foot articulated cable
Operating life	1,000,000 cycles minimum
Warranty	One year for material/workmanship and defects

Allegion, the Allegion logo, Schlage, and the Schlage logo are trademarks of Allegion plc, its subsidiaries and/or affiliates in the United States and other countries. All other trademarks are the property of their respective owners.

© 2024 Allegion plc

010523, Rev. 01/24

SERIII-W

Scramble Keypad

Overview

The SERIII scramble keypad is a keypad reader designed to prevent onlookers from detecting the PIN code being entered. The LED's display a randomly allocated set of numbers from 0 to 9. The position of the numbers change every time the keypad is activated. Only the user standing directly in front of the keypad can see the scrambled digits.

Features & Benefits

- Very narrow viewing angle of the lighted, scrambled digits
- The membrane keypad is extremely durable
- Random allocation of digits ensures even wear to the keys
- Individual PIN codes can be up to 9 digits in length
- The SERIII has a weatherproof rating of IP65
- An audible alarm signals when a button is depressed
- Robust polycarbonate enclosure
- The unit is equipped with power-up diagnostics and self-test routine
- The SERIII is provided with Wiegand communication protocol
- Over 3.6 million unique permutations are available
- Terminal connection on the rear of the unit

Check out our Schlage Credential Services

SERIII-W Specifications	
Dimensions (H x W x D)	5.39" x 4.17" x 2.05"
Input voltage	8 - 12 VDC
Input current	500mA max.
Operating temperature	5° F to 122° F
Weight	16.76 oz
Cable distance (Wiegand)	500' with 22AWG 6 conductor stranded with overall shield

Ordering Information

- **SERIII-W-GR** - Scramble keypad (gray)
- **SERIII-W-BLK** - Scramble keypad (black)

- **SMK-2-GR** - Scramble keypad surface mount kit (gray)
- **SMK-2-BLK** - Scramble keypad surface mount kit (black)
- **SSMK-2-ADA** - Scramble keypad surface mount kit (ADA compliant)

- **PMK-2-GR** - Panel mount kit (gray)
- **PMK-2-BLK** - Panel mount kit (black)
- **SPMK-2-GR** - Panel mount kit with steel back box (gray)
- **SPMK-2-BLK** - Panel mount kit with steel back box (black)

Allegion, the Allegion logo, Schlage and the Schlage logo are trademarks of Allegion plc, its subsidiaries and/or affiliates in the United States and other countries. All other trademarks are the property of their respective owners.

© 2024 Allegion plc
004250, Rev. 01/24

SEKPDWG & SEKPDMWG

Electronic Keypads

Overview

The fully encapsulated electronic keypad can be used by itself or next to another reader device for additional security. Its stainless steel construction is ideal for indoor or outdoor applications. The two designs, single gang box or the mullion mount style, give it the diversity needed for any application.

Features & Benefits

- Field selectable keypad configurations
- SEKPDWG mounts directly to a single gang electrical box
- SEKPDMWG mounts to any mullion style frame
- No moving parts to replace
- Heavy-duty piezoelectric keypad
- Industry standard outputs
- Billion Cycle Switch Technology™
- I\lo Moving Parts
- All Weather -40˚C to +70˚C
- Vandal resistant design
- Encapsulated electronics assembly
- Single gang or mullion
- Stainless steel
- Designed and manufactured in the USA

SEKPDWG & SEKPDMWG Specifications	
Dimensions	SEKPDWG: 5.125" x 3.375" x .437" SEKPDMWG: 7.125" x 1.75" x .75"
Power supply	5-12 VDC (field selectable)
Operating temperature	-40° F to 160° F
Weight	SEKPDWG: 16 oz SEKPDMWG: 4.4 oz
Material	316L stainless steel
Standby current draw	SEKPDWG: 5V-20mA, SEKPDMWG: 5V-20mA

Ordering Information

- **SEKPDWG** - Single gang style keypad
- **SEKPDMWG** - Mullion style keypad
- **SEKPD8B** - Mullion style keypad (8 bit)

Note: Specify 5V or 12V

Allegion, the Allegion logo, Schlage and the Schlage logo are trademarks of Allegion plc, its subsidiaries and/or affiliates in the United States and other countries. All other trademarks are the property of their respective owners.

© 2024 Allegion plc
004252, Rev. 01/24

OEM 200 Module

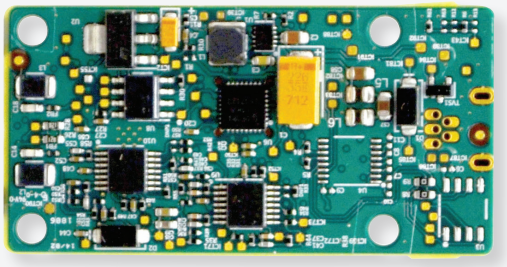

Overview

Today's customers want to extend the use of credentials beyond physical access control to maximize their investment and provide the added convenience of using a single credential for multiple applications. To help meet customers' needs, the OEM 200 module can be embedded into third-party products so that solution providers can seamlessly support RFID technology as part of their offering.

An 80mm antenna is available in a multi-technology version that combines 125 kHz proximity and 13.56 MHz smart card technology. The multi-technology antennas interface with Schlage® smart credentials (MIFARE Classic®, MIFARE Plus® and MIFARE® DESFire® EV3) and can read the card serial numbers (CSN) of a variety of smart cards from other manufacturers. Additionally, the OEM 200 module is already NFC compatible and able to support NFC and NFC wallet-based mobile credentials.

The OEM 200 has been designed for easy integration, but should you need any assistance, our knowledgeable application engineering team is ready to assist you with any design or technology questions you may have.

Features & Benefits

- Multi-technology version: Reads 125 kHz proximity credentials and 13.56 MHz smart credentials
- Supports NFC and NFC wallet-based mobile credentials or similar
- Wiegand and UART-TTL output available for simple interface with most third-party products
- Antenna connects easily to main board with flat flexible cable (FFC) (provided)
- LEDs for debugging and diagnostics
- Allegion integration support

OEM200 Specifications		
Dimensions	Main board	1.11" x 2.165" x 0.39" (28.0mm x 55.0mm x 9.9mm)
	80mm antenna board	1.35" x 3.125" x 0.14" (34.3mm x 79.4mm x 3.4mm)
125 kHz Technologies	Schlage and XceedID proximity	
	GE/CASI ProxLite®	
	HID® Proximity	
	AWID® Proximity	
	LENEL® Proximity	
13.56 MHz Technologies	Schlage MIFARE Classic, MIFARE DESFire EV1 (with PACSA enabled) or MIFARE Plus	
	Schlage NFC mobile credentials	
	PIV (FASC-N output options)	
	PIV-1 (GUID output options)	
	CSN for HID iCLASS®, ISO 15693, ISO 14443	

Card read range in free space[1]

Card	Card type	Read range
125 kHz	ASK, FSK	Up to 2.75”
13.56 MHz	ISO 15693	Up to 2.75”
13.56 MHz	ISO 14443A MIFARE Standard	Up to 3.25”
13.56 MHz	ISO 14443A MIFARE DESFire EV1	Up to 1.25”
13.56 MHz	ISO 14443A MIFARE Plus	Up to 1.0”

Electrical specifications	Operating temperature: -31 to 149°F (-35 to 65°C)
	Frequency: 125 kHz and 13.56 MHz
	Voltage input: 5-16V
	Average system current: 50 mAmps (180 mAmps max)
	Communication: Wiegand or UART-TTL

1. Antenna location inside end product and surrounding materials will affect the read range performance.

Ordering Information

Part # OEM200 TTL (module)

47259227 OEM200 80mm Antenna Multi-tech

Antenna Option:

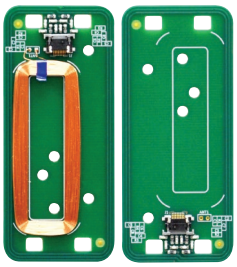

80 mm antenna
(multi-technology)

Allegion, the Allegion logo, Schlage and the Schlage logo are trademarks of Allegion plc, its subsidiaries and/or affiliates in the United States and other countries. All other trademarks are the property of their respective owners.

© 2024 Allegion plc
010175, Rev. 10/24

ALLEGION

Reader Controllers

This section of the Electronic Access control catalog covers the Schlage RC reader controller, CTE single door controller, and CT5000 single door controller.

Overview

Schlage delivers a comprehensive but straightforward controller portfolio where the need for traditional access control is made possible with more versatility than your previous Wiegand-hardwired, networked solution. Leveraging online wireless controllers, integrated edge reader controllers, and standalone controllers with no network connection requirement, we have an answer that fits the needs and location of all your openings.

The enclosure controller and reader controller offerings from Schlage feature standalone and/or online access control boasting the latest Bluetooth, Wi-Fi®, and Ethernet technologies that fit every step along the continuum of your security strategy.

Benefits

- Security
  - Electronics bring more visibility and control to virtually every opening
- Convenience
  - Offline and real-time based online solutions through the latest technology - LE, Wi-Fi® and Ethernet
- Efficiency
  - Manage users and assign access privileges from virtually anywhere

Schlage Credential Services

At Schlage, we understand that credentials are the key to a successful access control plan. And we know that some solutions available in the market today can lock you into a proprietary path that limits your options in the future. That is why we offer Schlage Credential Services with programs that are designed to provide you with a whole new level of security, adaptability and flexibility.

Services include:

- Custom encryption keys
- Default keys
- CardTrax™
- Custom format consulting
- Custom artwork

Check out our Schlage Credential Services

CTE ENGAGE™ Single Door Controller with Multi-Technology Reader

The CTE is an ENGAGE™ enabled single opening controller that allows perimeter and common area openings to be managed in a single system along with Schlage Control® smart locks, NDE and LE wireless locks. It is ideal for multifamily, commercial mixed use, narrow stile and retail storefront applications. The CTE is designed to work with a Schlage mobile enabled multi-technology reader and interface with an electrified lock, electromagnetic lock, electric strike, automatic operator, or exit device to control an opening.

Schlage RC Multi-Technology Reader Controller

The Schlage® RC is an IP reader controller that combines patented Pure IP™ access control technology together with Schlage's intelligent hardware, delivering a cost-effective all-in-one edge device that easily integrates into open PACS solutions. The Schlage RC connects to existing IT networks via a single PoE cable; reducing installation time and eliminating the need to run separate power to the door. The Schlage RC provides real-time connectivity with local mode feature, and can be managed in the same system as Schlage NDE and LE wireless locks.

Reader covers

Enrollment reader stand

Quick-connect cable

Advanced security module

Magnetic lock kit

Pure IP Reader Controller Accessories

Schlage® offers the following accessories and replacement parts to ensure your reader controllers are always secure and performing well.

- Reader controller covers
- Advanced security module
- Quick-connect cable
- Magnetic lock kit
- Enrollment reader stand

The CT5000 Offline Controller

The CT5000 offline single opening controller is also available for standalone applications. The CT5000 can support up to two separate Wiegand readers as well as interface with peripheral devices such as automatic operators, electric strikes, and electromagnetic locks.

The CT5000 offline single opening controller is an ideal solution for narrow stile store front and exit door applications. The CT5000 can operate in the same system as the AD Series and CO Series electronic locks. If networked functionality is required in the future, the CT5000 can be easily upgraded to a networked WRI400 wireless reader interface.

1. Some options are dependent upon choice of class and chassis; see price book for complete details.

© 2024 Allegion plc
013787, Rev. 10/24

RC Series

Multi-Technology Reader Controllers

Overview

The Schlage® RC is an IP reader controller that combines patented Pure IP™ access control technology together with Schlage's intelligent hardware, delivering a cost-effective all-in-one edge device that easily integrates into open PACS solutions. The Schlage RC connects to existing IT networks via a single PoE cable; reducing installation time and eliminating the need to run separate power to the door. The Schlage RC provides real-time connectivity with local mode feature, and can be managed in the same system as Schlage NDE and LE wireless locks.

Three models are available to allow for common mounting options; creating a simple install process at each door.

- **RC11:** Mullion mount, multi-technology IP reader controller
- **RC15:** Single gang mount, multi-technology IP reader controller
- **RCK15:** Single gang mount, multi-technology IP reader controller with keypad

Schlage RC reader controllers provide both a modern look and an advanced feature set. Designed with technology to support Bluetooth® and NFC (Near Field Communication) mobile credentials, smart credentials (13.56 MHz) and standard proximity credentials (125 kHz); end users can define their migration path to secure credentials.

Features & Benefits

- Host and local modes supported
  - Host mode allows for real time connectivity where the host makes real time decisions for access, LED and buzzer sequencing, etc. Should the connection drop, the device will switch to local mode.
  - Local mode allows functionality without a connection to the network. This results in faster user response times, less network traffic, and reduced host system loading.
- Reader controllers support 125 kHz proximity, 13.56 MHz smart technology, 2.4 GHz Bluetooth and Near Field Communication (NFC)
- Tamper detection via accelerometer senses any type of altering and prevents a security breach with the reader.
- Communication is secured using industry standard TLS 1.2 encryption
- Supports network communication speeds of 10 or 100 mbps half or full duplex
- Commission via ENGAGE™ mobile app for easy configuration
- Three configurable inputs; Door Position (DPS), Request to Exit (REX), and Auxiliary (AUX)
- Mullion, wall mount and wall mount with keypad form factors
- Credential parity with Schlage readers and wireless locks; ISONAS credential parity is a factory orderable option
- Accommodates interior, exterior, metal and non-metal installation environments

CYBERSECURITY
Learn about Allegion's commitment

Specifications

Model	RC11	RC15	RCK15
Reader technology	Mobile (NFC and Bluetooth), smart, proximity	Mobile (NFC and Bluetooth), smart, proximity	RC15 + keypad
Mounting style	Mullion	Single gang	Single gang
Modes and capacity	**Host mode:** real time connectivity; unlimited credential, events, time schedules, and holidays capacity* **Local mode:** decisions made at device when connection is offline or configured to local; 64,000 credentials - 5,000 events - 32 time schedules - 32 holidays * Host capacity is based on your host programming; contact your support team		
Network communications	10/100 Ethernet - half or full duplex - Cat5e, Cat6, or better cable WebSockets - Network host or client modes - DHCP addressing TLS1.2		
Visual and audible communications	LED (red, amber, green) Audible indicator (on/off)		
System Interfaces	2 TTL Lines / Clock & Data (for use with Advanced Security Module [ASM])		
Inputs	Request to Exit (REX) / Auxiliary Input (AUX) / Door Position Switch (DPS)		
Tamper	Yes		
Power input	PoE or PoE+ (IEEE 802.3af, Class 0) DC power: 10-13 VDC Please note: 24 VDC is not approved for this device		
Power output	600 mA maximum output current @ 12 VDC		
PoE / PoE+ Pigtail	26 AWG, Cat5E, 8" length		
Physical dimensions	5.94" x 1.77" x 1.0" (15.1cm x 4.5cm x 2.5cm)	5.13" x 3.25" x 1.0" (13.0cm x 8.3cm x 2.5cm)	5.13" x 3.25" x 1.0" (13.0cm x 8.3cm x 2.5cm)
Weight	5.8 oz (164.4 g)	8.1 oz (229.6 g)	8.2 oz (232.5 g)
Software compatibility	Works with open PACS systems including ISONAS Pure Access™ Cloud. See us.allegion.com/alliances for details.		
FIPS201 compliant	No		
Certifications	FCC, IC, UL294 V7 / cUL Listed RED Directive, CE Mark, IP65, REACH, Bluetooth SIG, RoHS3		
Frequency	2.4 GHz Bluetooth, 13.56 MHz Smart, 125 kHz Proximity		
Standards	ISO 14443A, ISO 15693		
Operating temperatures	-31° to 151°F (-40° to 66°C)		

Color Options

Black
(standard)

Allegion, the Allegion logo, Schlage and the Schlage logo are trademarks of Allegion plc, its subsidiaries and/or affiliates in the United States and other countries. All other trademarks are the property of their respective owners.

© 2024 Allegion plc
013614, Rev. 10/24

Pure IP™ Reader Controller Accessories

Reader covers

Overview

Schlage® offers a variety of accessories and replacement parts to ensure your reader controllers are always secure and performing well.

Reader Controller Covers

Replacement reader covers can be used to replace faded or cracked covers.

Advanced Security Module

Add an additional level of security for exterior doors, the advanced security module kit prevents the lock wires from being in contact with the unsecure side of the door.

Quick-Connect Cable

The quick connect cable allows the installer to connect the necessary reader controller wires without the hassle of the reader controller hanging off the other end. Simply connect the wiring harness and plug the reader controller in, it's that easy.

Magnetic Lock Kit

This part protects your reader controller from in-rush voltages and is primarily used for magnetic door locks.

Enrollment Reader Stand

Make the enrollment process even easier and quicker with this enrollment reader stand.

Color Options

Black (standard)

Advanced Security Module

Quick-connect cable

Magnetic lock kit

Enrollment reader stand

Specifications

Part	Cover	Cover	Cover
Part number C1	47317541	47317539	47317540
Corresponding controller reader model	RC11	RC15	RCK15
Reader controller type	Mullion	Single gang	Single gang with keypad
Dimensions (HxWxD)	5.91" x 1.72" x 0.81"	5.1" x 3.25" x 0.76"	5.1" x 3.25" x 0.76"
Material	PNT polymer	PNT polymer	PNT polymer

Part	Quick Connect Cable/Pigtail	Advanced Security Module (ASM)	Magnetic Lock Kit - In Rush Suppressor	RC15 Enrollment Reader Stand
Part number	47274561 - 10 FT Cable 47274562 - 25 FT Cable 47609539 - RC04 to RC11/ RC15 Adapter Cable 47884474- 18" Pigtail Cable	ACC-EDK-3A	ACC-IRS-4700	47962621
Product specifications	• 12 pin snap-in MOLEX connector • Jacketed cable for protection and improved cable pulls • 12 conductor cable, 22 AWG wires • Cable jacket pre-stripped for connections to the door's components • Being detachable simplifies the system's maintenance and troubleshooting	• For exterior doors, this kit provides an increased level of security by preventing the lock wires from being in contact with the unsecure side of the door • Durable plastic enclosure • Polycarbonate blend, UV stabilized • Potted for greater weather resistance • Powered by Schlage reader-controller; no additional power required • Rated for 3 amps at 12v DC • Proprietary encrypted serial data • 2 sets of terminal blocks for easy installation • Two LED indicators • Required for magnetic lock installations powered via PoE • Dimensions: 2-3/4" X 1-1/4" X 3/4"	• Any installation that is using magnetic locks that are equipped with a "quick-release feature" should have this in-rush protection installed • Dimensions: 1-1/4" x 1-1/4" x 2-1/4"	• Desktop stand designed to hold RC15 reader when used as an enrollment reader for Zentra or other PACS partners • RC15 reader fits tight and back slot allows for IP Pigtail to sit • Correctly positions credential fobs for easy enrollment into software • Works with both the C1 and C2 cover designs • Dimensions: 4" x 3-1/2" x 5" 1/4"

Allegion, the Allegion logo, Schlage and the Schlage logo are trademarks of Allegion plc, its subsidiaries and/or affiliates in the United States and other countries. All other trademarks are the property of their respective owners.

© 2024 Allegion plc
013623, Rev. 10/24

CTE

ENGAGE™ Single Door Controller with Mobile Enabled Multi-Technology Reader

Overview

The CTE is an ENGAGE™ enabled single opening controller that allows perimeter and common area openings to be managed in a single system along with Schlage Control® Mobile Enabled Smart Locks, NDE cylindrical and LE mortise wireless locks. It is ideal for multifamily, commercial mixed use and retail store front applications.

The CTE is designed to work with a Schlage® mobile enabled multitechnology credential reader and interface with an electrified lock, electromagnetic lock, electric strike, automatic operator, or exit device to control an opening.

The CTE single door controller is designed for flexibility and can be managed with ENGAGE™ web and mobile apps or with one of our Physical Access Control Software (PACS) provider systems.

Features & Benefits

- Enables around the door solution with ENGAGE functionality
- Built-in Bluetooth® and Wi-Fi®
- Complete with Schlage MTB11 or MTB15 reader (required reader interface RS-485)
- No-Tour capable
- Flexible connectivity options: manage with ENGAGE web and mobile apps or with one of our PACS providers
- Inputs: door position (DPS), request to exit (REX), request to enter (REN), remote release (REL)
- Outputs: lock relay, alarm relay, auxiliary (Aux) relay
- Input Power: 12 or 24 VDC or Power over Ethernet (PoE/PoE+)
- Provides DC output power and dry control contacts

Check out our Schlage Credential Services

CTE Single Door Controller Specifications	
Users	Up to 5,000
Audits	Up to 2,000
Schedules	Up to 16
Holidays	Up to 32
Time zones	Up to 16
Communication standards	Bluetooth® Low Energy (version 4.2)
	2.4 GHz Wi-Fi® (IEEE 802.11b/g/n)
	WPA2, WPA, WEP, 802.1x (PEAP)
	Transport Layer Security (TLS) version 1.2
	Advanced Encryption Standard (AES), 256-bit
Gateway communication range	Up to 30' in typical building environments. A detailed site survey is recommended. Reference ENGAGE™ Gateway data sheet for additional details.
Connectivity options	Mobile (send updates at door)
	Wi-Fi access point (automatic daily updates)
	ENGAGE Gateway, IP to host (Networked wireless reader interface)
	No-Tour[1]
Power inputs	12 or 24 VDC at 3 amps input for powered outputs to get Max 2 amp output on relays, 0.5 amp minimum input when using dry contacts.
	PoE/PoE+ (IEEE 802.3af/at)
Powered outputs: Locking mechanism, alarm, aux	12 VDC input: 2A @ 12 VDC max (combined output across powered outputs)
	24 VDC input: 2A @ 24 VDC max (combined output across powered outputs)
	PoE input: 0.5A @ 12 VDC max (combined output across powered outputs)
	PoE+ input: 1.5A @ 12 VDC max (combined output across powered outputs)
Dry outputs: locking mechanism, alarm, aux	Locking mechanism: 2A @ 30 VDC max
Reader interface	0.3A @ 12 VDC Max (up to 500 ft.)
	12 or 24 VDC input: 12V @ 0.3A max output POE or POE+ input: 12V @ 0.3A max output
	Aux: 2A @ 30 VDC max
	Alarm: 2A @ 30 VDC max
	Reader (Schlage MTB11 or MTB15) (Required to utilize -485 interface)
Signal inputs	Request-to-Enter (REN)
	Request-to-Exit (REX)
	Remote Release (REL) — wired
	Door Position Switch (DPS)
	Tamper (TAMP)
Operating temperature (indoor)	-31°F (-35°C) to 151°F (66°C)
Operating humidity	0 - 100% Non-condensing
Certifications	UL 294 Indoor, FCC Part 15, NEMA Enclosure Indoor (Type 1, 4, and 4X), ULC S319 Indoor, RoHS
Dimensions	2.96" x 5.89" x 7.86"

1. With MT20W and smart credential or mobile credential (consult your access control software provider for specific support).

The CTE single door controller with mobile enabled multi-technology reader kit can be used in a variety of applications. Below are a few examples:

ENGAGE™ cloud via mobile device or Wi-Fi, or PACS provider via Wi-Fi or GWE with IP to host

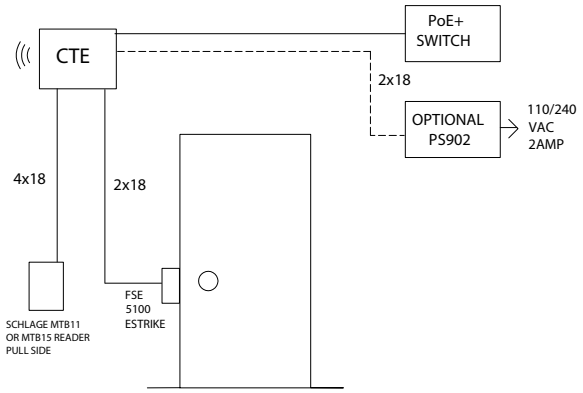

Operation:

Presenting a valid credential to Schlage MTB11 or MTB15 reader will cause fail secure 5100 electric strike to release for authorized entrance. Free egress always.

Products:

We offer a variety of electric strikes from Locknetics® and Von Duprin®, as well as Schlage Power Supplies to meet the specific needs of the opening.

ENGAGE™ cloud via mobile device or Wi-Fi, or PACS provider via Wi-Fi or GWE with IP to host

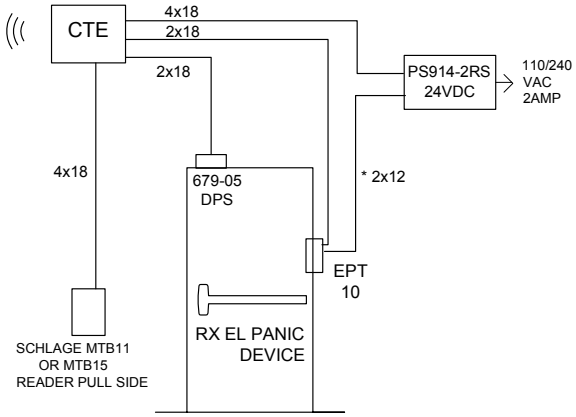

Operation:

Presenting a valid credential to Schlage MTB11 or MTB15 reader will cause EL panic device to retract for authorized entrance. Free non-alarmed egress at all times.

Products:

We offer a variety of Falcon® and Von Duprin exit devices, and Von Duprin power supplies to meet the specific needs of the opening.

ENGAGE™ cloud via mobile device or Wi-Fi, or PACS provider via Wi-Fi or GWE with IP to host

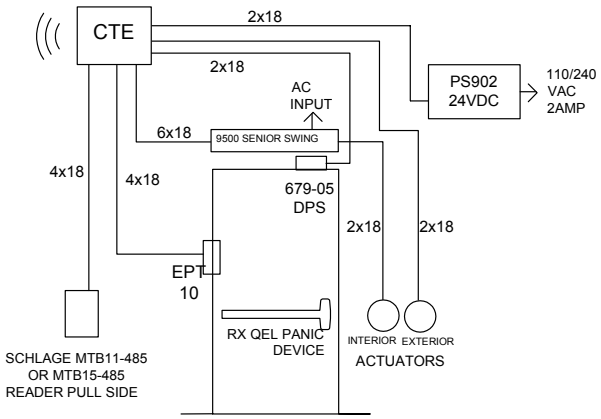

Operation:

Presenting a valid credential to Schlage MTB11 or MTB15 will cause QEL panic device to retract for authorized entrance and enable exterior actuator. Free non-alarmed egress at all times. Interior actuator always active to retract QEL panic and open door.

Products:

We offer a variety of hardware and accessories from Von Duprin, LCN®, Schlage, and Locknetics to meet the specific needs of the opening.

Please note all components sold separately.

Reader Requirement

MTB11 *MTB15*

The CTE Single Door Controller Kit is Available with Two Reader Options and Two Cover Options:

- **CTE-MTB11:** CTE with mobile enabled multi-technology mullion reader kit
- **CTE-MTB15**: CTE with mobile enabled multi-technology single gang reader kit
- **47317558-SCH-B: MTB11:** Standard reader cover - Black, Schlage Bluetooth logo
- **47317564-SCH-B: MTB15:** Standard reader cover - Black, Schlage Bluetooth logo
- **47744033-SCH-B: MTB11 C2:** Reader cover - Black, Schlage Bluetooth logo
- **47744034-SCH-B : MTB15 C2:** Reader cover - Black, Schlage Bluetooth logo

Notes:

- Reader color (black or cream) can be specified; black is the default
- Custom reader configuration can be specified
- Required to utilize RS-485 interface

Credential Compatibility

Mobile Enabled Multi-Technology Reader Specification	
Proximity credential compatibility	Compatibility: Schlage®, ISONAS™, HID[5], GE/CASI ProxLite®, AWID® and LenelProx® Schlage credential style formats: Clamshell, ISO card, ISO card with magnetic stripe, keyfob, thin keyfob, and PVC adhesive disc
Smart credential compatibility[1]	Secure sector compatibility: Schlage MIFARE Classic®, Schlage MIFARE Plus®, Schlage MIFARE® DESFire® with PACSA CSN only compatibility[2]: HID iClass®, Inside Contactless Pico Tag®, MIFARE Classic/Plus/DESFire, ST Microelectronics®, Texas Instruments Tag-It®, Phillips I-Code® Schlage credential style formats: Clamshell, ISO card, ISO card with magnetic stripe, keyfob, thin keyfob, wearable wristband, PVC adhesive patch
Mobile credential compatibility	Compatibility: Schlage Mobile Bluetooth® Credential[3], Integrated PACS Mobile Credential with Bluetooth[4], NFC mobile credentials in Apple Wallet® and Google Wallet™ [4]

1. No-Tour applications using smart credentials require minimum memory size of 8k bit/1K byte.
2. Configuration card required to enable CSN.
3. Supported through ENGAGE.
4. Dependent on PACS provider integrations and capabilities. Go to us.allegion.com/alliances for more information.
5. Proximity bit lengths greater than 37 not supported.

The CTE can operate in the same system as Schlage Control®, NDE and LE wireless locks.

Manage with ENGAGE™ cloud based web and mobile apps or with one of our PACS providers.

To learn more, visit allegionengage.com.

Allegion takes a broad and deep approach to ensuring the safety and security of its products. The cybersecurity program at Allegion is designed around four pillars: security and privacy by design, built on proven security practices, security updates and vulnerability management, and testing by internal and external experts.

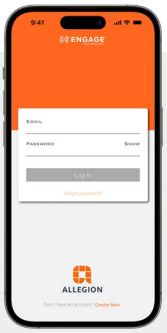

Use the ENGAGE mobile app to commission and connect devices to your access control system of choice

Download on the App Store

ANDROID APP ON Google play

Allegion, the Allegion logo, ENGAGE, Falcon, LCN, Locknetics, Schlage, the Schlage logo, and Von Duprin are trademarks of Allegion plc, its subsidiaries and/or affiliates in the United States and other countries. All other trademarks are the property of their respective owners.

© 2024 Allegion plc
011910, Rev. 10/24

CT5000

Offline Controller

Overview

The CT5000 is an offline single opening controller designed for applications where the security and convenience of offline electronic access control is desired, but an integrated electronic lock may not be practical. It is an ideal solution for narrow stile aluminum store front applications because it can work with a variety of readers, as well as interface with peripheral devices such automatic operators, electric strikes, and electromagnetic locks.

The CT5000 is compatible with many brands and types of credential technologies including magnetic stripe (tracks 1, 2, and 3), 125 kHz proximity, and 13.56 MHz smart cards. It also supports a variety of card functions including: normal, toggle, freeze, pass through, construction, lockdown and card + PIN applications.

As a complement to your facility's portfolio of CO Series and AD Series devices and networked readers, CT5000 is also capable of upgrade should your needs change to a wireless networked solution.

With the addition of a networked communication board and upgraded firmware, the CT5000 becomes a wireless reader interface capable of communicating via 900MHz signal to an AD Series PIM400. As a wireless reader interface, it can connect to your networked access control system, eliminating the need to run additional wires to the door, saving you time and money on installation.

Features & Benefits

- Three form C relay outputs and three inputs that can include door position and request to exit
- CT5000 strike relay can be configured to fail safe or fail secure
- Upgradable to a wireless reader interface configuration to allow networked communication as your security needs evolve
- Supports up to two parallel Wiegand or Clock & Data reader inputs on a single opening
- Programmable via Schlage Utility Software (SUS) mobile app on compatible Android™ devices and SUS-A cable
- Includes a 15' cable and wallplate connection to enable programming using the SUS Android mobile app from a remote connection point with a 125' cable option available
- Up to 5,000 unique users[1] with audit trail of up to 5,000 events[1]
- Up to 16 holidays and 8 time zones enables auto lock and unlock during specified periods with Schlage Express software use
- Door monitoring capable including door position and request-to-exit (remote release)

1. Depending on your access control software

CT5000 Offline Controllers

The CT5000 can be used for front door applications with an automatic operator, electric strike and card reader

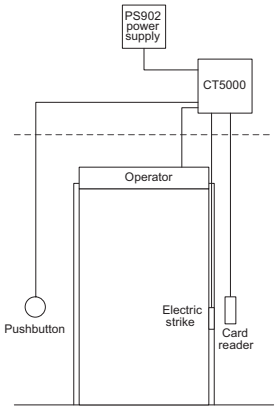

For narrow stile applications, the CT5000 can be used with an electric strike and card reader

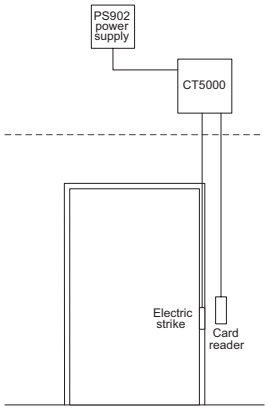

The CT5000 and a card reader along with the Von Duprin 914 Power Supply can control two EL exit devices for double door applications

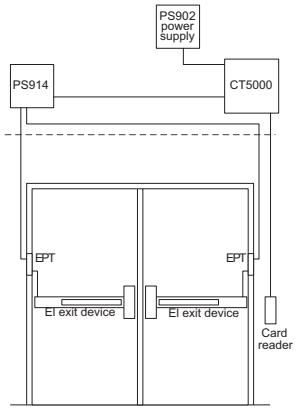

Note: PS902 and Von Duprin PS914 are sold separately.

CT5000 Offline Controller Specifications		
Users		Up to 5000
Audits		Up to 5000
Power supply		12 VDC or 24 VDC (sold separately, must be UL 294 Class 2 listed power supply)
Voltage range		9.5 VDC to 26 VDC
Connector cable specifications	DC power input	18AWG, 2 conductor (Belden 8760 or equivalent) up to 1000 ft (305 m)
	Credential readers (x2)	Data signals: 22AWG, 6 conductor (Alpha 1296C or equivalent) up to 500 feet (152 meters) Reader tamper signals: 18AWG, twisted pair shielded (Belden 8760 or equivalent) up to 500 feet (152 meters)
	Strike/aux relay outputs	18AWG, 2 conductor (Belden 8760 or equivalent) up to 2000 feet (610 meters)
Relay output tolerances	Strike output relay	Form C relay; 6 amps @ 24VDC or 6 amps @ 20 VAC or 3 amps @ 240 VAC
	Auxiliary output relay	Form C relay; 6 amps @ 24VDC or 6 amps @ 20 VAC or 3 amps @ 240 VAC
	Alarm output relay	Form C relay; 6 amps @ 24VDC or 6 amps @ 20 VAC or 3 amps @ 240 VAC
Operating temperature		-31°F (-35°C) to 151°F (66°C)
Operating humidity		0 - 100% condensing
Certifications		UL 294; Canada UL; FCC Part 15; RoHS
Dimensions		10.43" x 7.28" x 3.79" 26.49 cm x 18.49 cm x 9.63 cm
Programming method		Manually programmed via compatible keypad or computer programmed via the Schlage Utility Software (SUS) mobile app on compatible Android devices and SUS-A cable. Also supports the legacy Schlage Handheld Device (HHD) with SUS.
Optional accessories		125 foot USB remote cable connector, PS902, PS904 or Von Duprin® PS914 (sold separately)

Credential Compatibility (Software & Reader Dependent)	
Magnetic stripe card	Field configurable track 1, 2, or 3
Proximity card	Schlage, ISONAS® (34X, 35X, 35C, 37X bit formats), HID,® GE/CASI ProxLite™ and AWID® 26 bit format
Smart card	Schlage MIFARE® DESFire®, HID iCLASS® CSN only 26 bit format, PIV and PIV-I

The Following Readers are UL 294 Listed for Use With the CT5000:

- Essex Electronics model KTP-162
- Mercury Security models MR-5 and MR-20
- Schlage model PR10
- Schlage models MTB11, MTB15, MTKB15, MT11, MT15, MTK15, MTMS15, MTMSK15, and SM10

Allegion, the Allegion logo, Schlage and the Schlage logo are trademarks of Allegion plc, its subsidiaries and/or affiliates in the United States and other countries. All other trademarks are the property of their respective owners.

© 2024 Allegion plc
004016, Rev. 01/24

ALLEGION

System Components

The systems components category features a variety of devices which are utilized as part of an access control system. Products include electric strikes, electromagnetic locks, power supplies, and system accessories.

Electric Strikes

Overview

Electric strikes provide remote release of a locked door, allowing a door to be opened without retracting the latch bolt. Von Duprin offers a selection of strikes for a variety of applications and door preps.

Features

The 4200 Series is a great choice for commercial applications where traffic control is the primary function. It is designed for use with cylindrical locks and can be used with all Schlage and Falcon locks as well as those of many other manufacturers'.

The 5100 Series is a versatile electric strike designed for medium-duty applications, specifically to control traffic flow through openings in retail and commercial facilities.

Two series of heavy-duty stainless steel strike families are designed for use with rim exit devices. The 6100 Series comes in five configurations including a rim nightlatch strike. 6300 Series is a single, surface mounted strike great for aftermarket replacement.

The 6200 Series includes 17 strike configurations featuring stainless steel construction for heavy duty applications. Use them with mortise or cylindrical locks. Both the 6100 and 6200 Series are available with a variety of options including AC operation, dual switch monitoring, entry buzzer, fail secure and fail safe.

The 6400 Series is an all-in-one modular strike for both cylindrical and mortise applications. Its field configurable deadbolt keeper and dead latch ramp to allow for alignment with a wide variety of doors and frames.

Benefits

Electric strikes can be used in standalone applications or as part of a sophisticated access control system and can be deployed on a variety of openings. In many cases electric strikes are an ideal solution for end users who are ready to migrate from mechanical to electronic access control.

Electromagnetic Locks

Overview

The broad portfolio of Schlage electromagnetic locks offers a solution for most every application. Whether it's securing a hospital laboratory, monitoring a controlled area in an airport or providing traffic control for doors in an institutional building, Schlage electromagnetic door locks are designed to exceed the standards set by the Builders Hardware Manufacturers Association (BHMA). The portfolio encompasses a variety of hold force ratings including 500 lbs. for traffic control, 1000 lbs. for high security and 1500 lbs. for maximum security, as well as specialty locks for unique applications.

Features

The M400 Series electromagnetic locks are available in two configurations to meet your specific security needs. M420, M450 and M490 provide basic security while models M420P, M450P and M490P provide intelligent sensing and reporting features needed to integrate with access control systems. The M400 Series is available with BHMA hold force ratings of 500 lbs, 1000 lbs and 1500 lbs.

Schlage also offers a variety of electromagnetic locks for specialty applications including the M490DE for delayed egress, 490G for gates, GF3000 shear locks for mortised/vertical doors, and the 320M for sliding door applications.

Benefits

The M400 Series electromagnetic locks feature a bayonet mounting system that allows the installer to have their hands free during the mounting process. All M400 Series electromagnetic locks are symmetrical with field-selectable handing, allowing for optimum placement of the magnet no matter the application.

Schlage specialty electromagnetic locks are each designed with specific feature sets to optimize performance in the variety of unique, harsh and complex environments for which they are suited.

Power Supplies

Overview

PS900 Series power supplies and accessories offer enhanced flexibility and functionality specific to the changing needs of the access control market. The PS900 Series can be used in a variety of applications to convert high voltage AC power into the low voltage DC outputs required by most access control devices. The PS900 Series protects devices downstream by providing Class 21, filtered and regulated power. The full line is UL 294 certified.

Features

The PS900 Series features three Schlage branded models; PS902 - 2 amp, PS904 - 4 amp, and PS906 – 6 amp. The PS900 Series also features the Von Duprin PS914 – 4 amp with high in-rush which is designed specifically for use with electrified exit devices. The full series of power supplies can be outfitted with a variety of distribution options including basic fuse protection, simple relay, and advanced logic providing complex sequencing and timing functions.

Benefits

Common to the line of PS900 Series power supplies is a constant output rating at both 12v and 24v settings, universal 120 VAC to 240 VAC input, and polarized option board connectors. An optional fire alarm interface board mounting allows outputs to be configured as switched (power cut) or unswitched (power continues) when alarm signal is provided.

Installation is simplified by utilizing a flat mounting design and polarized locking connectors for option boards. This new design eliminates the need for racks and side connectors. The flat mounting of the option boards also provides for easier access to the terminal blocks for connection of electrified devices (such as electrified strikes, electromagnetic locks, card readers, etc).

System Accessories

Overview

System accessories include a variety of devices that enable specific functionality whether in standalone applications or as part of networked access control systems. The category is comprised of pushbuttons, key switches, request-to-exit bars, monitoring stations and consoles, exit sensors, electric horns and more.

Features

The specially designed 620/631 Series heavy-duty pushbuttons and 700 Series general purpose pushbuttons, as well as the 650 Series heavy-duty keyswitches, offer momentary or maintained SPDT or DPDT contact configurations.

The 700 Series pushbuttons are used to control the ingress and/ or egress of a door.

The 600 Series pushbuttons are heavy-duty and have multiple button configurations and finish options.

The 650 Series keyswitches utilize an innovative magnetic spring design which allows installers to quickly configure both clockwise and counterclockwise key turn direction, as well as momentary or maintained action.

The 740 Series emergency break glass releases are designed for use as emergency releases of non-designated egress doors such as in individual and partitioned laboratories, secluded testing areas, or other isolated work rooms that are purposely provided with exit doors.

The 672/692 Series request-to-exit bars are non-latching releasing devices which allow egress at doors with electric locking devices, such as electromagnetic locks.

The SCAN II is a passive infrared (PIR) sensor specifically designed for request-to-exit applications.

The 8200 Series consoles provide door control and monitoring for up to eight zones. The 8204 is used for one to four zones and the 8208 for one to eight zones.

The 800/801 Series monitoring stations can provide monitoring for a single zone with up to 2 LED indicators. The 801 unit includes an audible and visual indication of lock status and delay activation.

The 660 Series mini station control is designed for concealed desk application, and it is used to release an electric or electronic locking mechanism from a remote location.

Electric horns are designed for use as an immediate local audible warning device incorporated in a security system. Horns are field selectable 12 or 24 VDC with eight combinations of volume, tone and code.

High security door position sensors are ideal for high security applications including server farms, government facilities, and military bases.

Magnetic door position switches can be used to monitor a wide range of conditions for doors, roof hatches, gates or the proximity of any two objects.

Electric power transfers (EPT) are also used when installing electrified exit devices or electrified locks. They provide a means of transferring electrical power from a door frame to the edge of a swinging door.

Electrified hinges and power transfer pivots integrate seamlessly with your access control system and your door mounted electrified hardware.

Armored door cords are used when installing electric exit devices or electric locks and provide a simple and economical solution for transferring power from frame to door.

The 442S cabinet lock by Schlage provides a versatile solution to add access control to a cabinet.

The PB405 PowerBolt is a mortise, right angle deadbolt with which is available with fail-safe or fail-secure options..

Benefits

System accessories allow you to customize each opening to meet specific security and safety needs. Schlage offers a variety of the most popular accessories designed for medium to heavyduty applications. By choosing Schlage components, you can be assured that the system will meet the requirements of the job, whether new construction or aftermarket.

Power Supplies - Schlage & Von Duprin

	PS902	PS904	PS906	PS914
Features				
Input voltage	120V/240V AC, 50/60 Hz, universal input			
Output voltage	2 amp @ 12V or 24V DC, field selectable	4 amp @ 12V or 24V DC, field selectable	6 amp @ 12V or 24V DC, field selectable	4 amp, High Inrush @ 12V or 24V, field selectable
Distribution/option board connectors	1	2	3	2
Fire alarm plug-in connector	Yes	Yes[1]	Yes[1]	Yes[1]
Battery backup plug-in connector	Yes	Yes	Yes	Yes
Enclosure				
Dimensions (H x W x D)	14 in x 12 in x 4 in			
Key lock option	Y	Y	Y	Y
Battery backup				
900-BB: battery backup board only	Y	Y	Y[3]	Y
900-BBK: battery backup kit	Y	Y	Y[3]	Y
Option boards				
900-FA: fire alarm	Y	Y (Must be installed on an option board)	Y (Must be installed on an option board)	Y (Must be installed on an option board)
900-2RS: 2 relay option board	Y	Y	Y	Y
900-4R: 4 relay option board	Y	Y	Y	Y
900-4RL: 4 relay logic board	Y	Y	Y	Y
900-8F: fuse protected 8 zone board	Y	Y	Y	Y
900-8P: PTC 8 zone distribution board	Y	Y	Y (Class 2 rated on PS906 only)	Y
Certifications				
UL 294	Y	Y	Y	Y
ULC-S318	Y	Y	Y	Y
Class 2	Y	Y	Y [2]	Y
RoHS	Y	Y	Y	Y
FCC Part 15	Y	Y	Y	Y

1. Requires available option board for connection.
2. Class 2 rated outputs can be provided using 900-8P distribution board in conjunction with the PS906.
3. Addition of battery in compartment limits option board application to two.

Electromagnetic Locks

M400 Electromagnetic Locks					
	M420, M420P	**M450, M450P**	**M490, M490P**	**M490DE, M490DEP**	**M490G**
Features					
Hold force	500 lbs.	1000 lbs	1500 lbs	1300 lbs	1500 lbs
Input voltage	12V/24V DC	12V/24V DC	12V/24V DC	12V/24V DC	12V/24V DC
Current draw	0.75A @ 12V DC 0.38A @ 24V DC	0.75A @ 12V DC 0.38A @ 24V DC	0.65A @ 12V DC 0.35A @ 24V DC	.75A @ 12V DC .45A @ 24V DC	0.65A @ 12V DC 0.35A @ 24V DC
Dimensions					
Lock dimensions (H x L x W)	2.5 in x 9 in x 1.375 in	3 in x 10.25 in x 1.75 in	3 in x 12.5 in x 1.75 in	3 in x 12.5 in x 3.0625 in	3 in x 11 in x 1.75 in
Weight	6 lbs	10 lbs	14 lbs	16 lbs	14 lbs
Certifications					
ANSI/BHMA 156.23	Y	Y	Y	-	Y - Outdoor Rated
ANSI/BHMA 156.24	-	-	-	Y	-
UL 10C	3-hour	3-hour	3-hour	3-hour	-
UL 1034	Y	Y	Y	-	-
UL 294	Y	Y	Y	Y	-
cUL	Y	Y	Y	Y	-
CSFM	Y	Y	Y	Y	-

M490DEP also meets NFPA 101 Life Safety Code and can be ordered as BOCA compliant.

Specialty Electromagnetic Locks			
	GF3000SM (Surface mount)	**GF3000 (Mortise mount)**	**320M**
Features			
Hold force	3000 lbs	3000 lbs	400/550 lbs
Input voltage	12V/24V DC	12V/24V DC	12V/24V DC
Current draw	0.90A @ 12V DC 0.45A @ 24V DC	0.90A @ 12V DC 0.45A @ 24V DC	0.23A @12V DC 0.45A @ 24V DC
Dimensions			
Lock dimensions (H x L x W)	1.25 in X 9.8125 in X 1.5 in	1.5 in X 9.5 in X 1.5 in	1.375 in x 7 in x 1.875 in
Weight	9 lbs	7 lbs	6 lbs
Certifications			
ANSI/BHMA 156.23	Y	Y	N/A
ANSI/BHMA 156.24	-	-	-
UL 10C	3-hour	3-hour	3-hour
UL 1034	-	-	-
UL 294	-	-	-
cUL	Y	Y	Y
CSFM	Y	Y	Y

This page intentionally left blank.

© 2024 Allegion plc

VON DUPRIN®

4200 Series

Electric Strike for Cylindrical Locks & Deadlatches

Overview

4200 Series is designed to offer versatility in two commercial-duty electric door strike models. They are a great choice for applications where interior traffic control is the primary function.

Designed for compatibility with a wide range of cylindrical devices, they are able to address a broad range of needs. You'll find 4200 Series strikes work with all Schlage and Falcon cylindrical locks as well as those of many other manufacturers.

These reliable strikes are easy to order, configure and install. Field selectable options include changing fail safe and fail secure modes without disassembly. They also feature a 12/24 dual-voltage solenoid for field wiring of either input voltage. Factory orderable options include an entry buzzer and rectifier kits to provide even greater flexibility and available parts include square or round cornered ANSI faceplates.

Features & Benefits

- Designed for cylindrical applications
- Capable of four in-field configurations
- Shallow 1-3/8" backbox depth
- Field selectable 12/24 VDC voltage
- Non-handed, internal solenoid design
- Low current draw for PoE installations
- Field selectable power failure mode (fail-safe/fail-secure) without disassembly
- Heavy-duty stainless steel faceplate
- Latchbolt monitoring available (4212 model)
- Options include entry buzzer and rectifier kits

Lockset Compatibility

The 4200 series is compatible with all Schlage and Falcon cylindrical locks as well as cylindrical and deadlatch locks of many other manufacturers.

- The 4211 is compatible with locksets with 5/8" (15 mm) throw latchbolts, or up to 3/4" (19mm) throw latchbolts with a 1/8" door gap.
- The 4212 is compatible with locksets with 1/2" (12.7mm) throw latchbolts, or up to 5/8" (15 mm) throw latchbolts with a 1/8" door gap.

4200 Series Power Requirements

Model	Voltage	Current	Duty	Amps	Ohms
4211 or 4212	12V	DC	Continuous	0.20	
4211 or 4212	24V	DC	Continuous	0.10	

4212 Latchbolt monitor switch rating: 30VDC at 0.20 A

The 4200 series requires a DC regulated power supply, and the Schlage PS900 series power supplies are recommended.

Continuous duty = Energized 1 minute or more

Model Specifications

Model number		4211	4212
Retrofits model		HES 5200, RCI 6 Series	HES 5000, RCI 6 Series
Latchbolt throw		3/4"	5/8"
Latchbolt monitor switch		---	•
Face plate length		4-7/8"	4-7/8"
Backbox depth		1-3/8"	1-3/8"
Finish (faceplate)		BHMA 630/US32D	
Lockset	Cylindrical	•	•
	Deadlatch	•	•
	Mortise	---	---
Number of doors	Single	•	•
	Pair	---	---
Frame type	Hollow metal	•	••
	Aluminum	•	•
	Wood	---	---
Options	EB (entry buzzer - fail-secure only)	•	•
	S012 & S024 rectifier kit for AC to DC operation	•	•

Dimensions

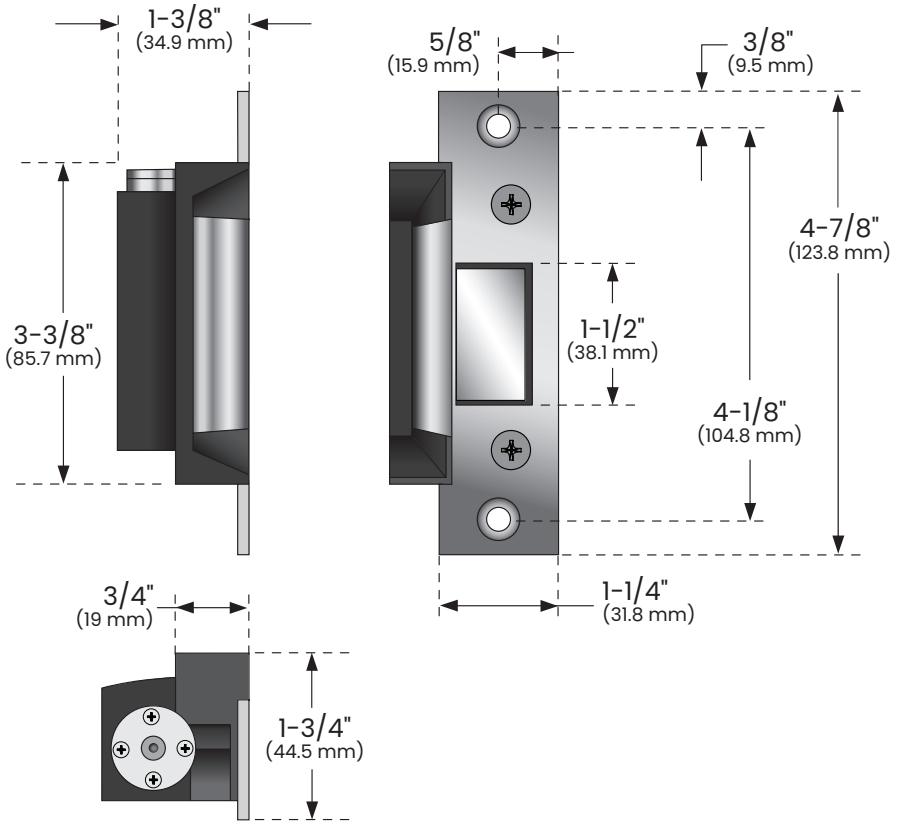

Wiring

12 VDC strike wiring

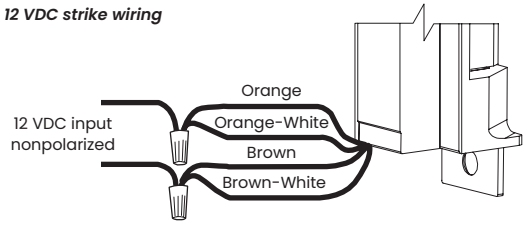

24 VDC strike wiring

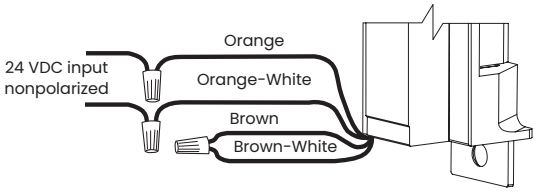

Latchbolt monitoring switch (4212 only)

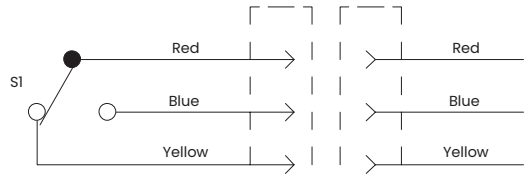

Switch shown with latch status tripper depressed

Ordering Information

4200 - S024 - EB

Model	Rectifier Kit*	Buzzer*
1	2	3

*Optional

Selections correspond with the numbers above.

1 Model	
4211	See model specification chart to make the proper selection
4212	See model specification chart to make the proper selection

2 Rectifier Kit (optional)	
S012	Converts 12 VAC voltage to 12 VDC to operate the solenoid
S024	Converts 24 VAC voltage to 24 VDC to operate the solenoid

3 Buzzer (optional)	
EB	Entry Buzzer, with fail-secure (FSE) configured

Standard Features

- Power failure mode: Field configurable fail-secure/fail-safe
- Voltage: Field configurable 12 VDC/24 VDC dual voltage solenoid
- Finish: BHMA 630/US32D satin stainless steel
- Includes mounting tabs, fail secure conversion hex key, wood and machine screws, plus a suppressing diode.

© 2024 Allegion plc
010151, Rev. 01/24

VON DUPRIN®

5100 Series

Electric Strike for Cylindrical Locksets & Deadlatches

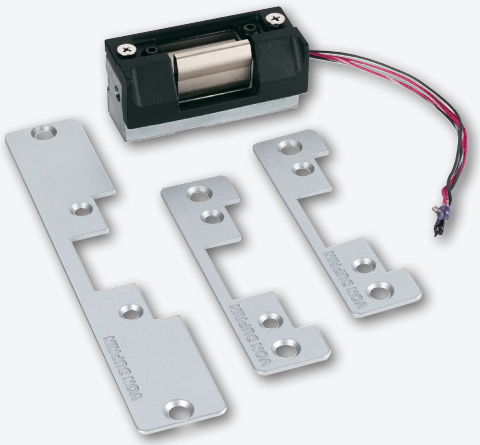

Overview

The Von Duprin 5100 Series electric door strike has been designed to offer flexibility and convenience for locksmiths and security professionals alike. This easy-to-install electric strike was created for medium-duty applications, specifically to control traffic flow through openings in retail and commercial environments.

The 5100 electric strike is compatible with a wide range of cylindrical devices and is extremely versatile for field conversions. The combination of three faceplate options plus field selectable voltage and power fail modes allows it to be changed on the job site to create as many as 12 different configurations. An adjustable keeper also improves fit for applications with weather stripping or tight door preps. In short, the 5100 provides added convenience by ensuring the right parts are in the box to get the job done.

Like other Von Duprin strikes, the 5100 was developed to meet high standards and engineered for reliability and quality. Its durable construction and tamper-resistant design stands up to abuse and is burglary-resistant (UL 1034).

Features & Benefits

- Designed for cylindrical applications
- Capable of 12 in-field configurations
- Three faceplates standard in every box
- Field selectable 12/24 voltage
- Non-handed, internal solenoid design
- Field selectable power failure mode (fail-safe/fail-secure)
- Adjustable keeper improves fit on tight door preps
- Options include 12 and 24 VAC to VDC rectifier kits
- Available in three finishes to suite with existing hardware
- UL 1034 listed for burglary-resistant electric door strikes

5100 Series Power Requirements					
Model	Voltage	Current	Duty	Amps	Ohms
5100	12V	DC	Continuous	0.38	32
5100	24V	DC	Continuous	0.19	128

Continuous duty = Energized 1 minute or more

Model Specifications	
Model Number	5100
Retrofits Model	HES 5000C, 5200C, RCI 7 Series
Latchbolt Throw	1/2" to 5/8" (1/2" keeper depth)
Face Plate Length	4-7/8" or 7-15/16"
Backbox Depth	1-11/16"
Lockset	Cylindrical and deadlatch
Number of Doors	Single
Frame Type	Hollow metal, aluminum and wood
Application Notes	Versatile electric strike for aftermarket, covering multiple applications in one SKU.

Lockset compatibility: Keeper depth of 1/2" is sufficient to accommodate all cylindrical locks up to 5/8" throw and most aluminum narrow stile deadlatches.

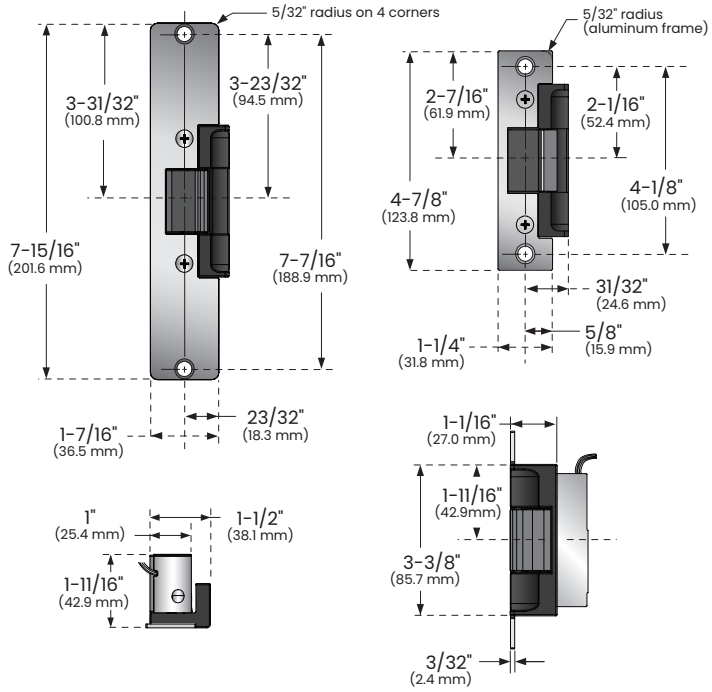

Solenoid power requirements; 12VDC, 0.38 A, 24 VDC, 0.19 A

For DC operation, Von Duprin PS902 series power supply is recommended.
For AC operation, Von Duprin SO24 kit is recommended.

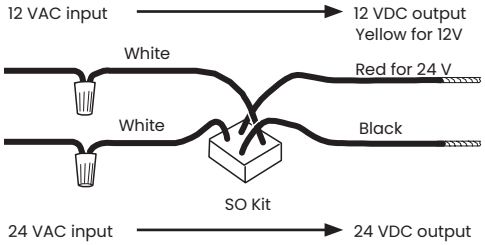

12 VDC strike wiring

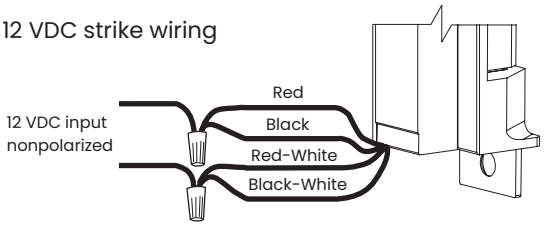

24VDC strike wiring

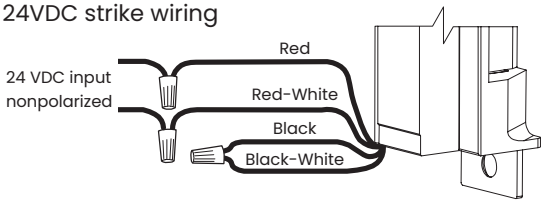

Ordering Information

5100 - US19 - S024

Model	Finish	Rectifier Kit*
1	2	3

* Optional

Selections correspond with the numbers above.

1	Model
5100	Electric strike for cylindrical locksets
2	**Finish**
US SP28/BHMA 689	Aluminum
US 19/BHMA 622	Flat Black
US SP313/BHMA 695	Dark brown
3	**Rectifier Kit (optional)**
S012	Converts 12 VAC voltage to 12 VDC to operate the solenoid
S024	Converts 24 VAC voltage to 24 VDC to operate the solenoid

Standard Features

- Power failure mode: Field configurable fail-secure/fail-safe
- Voltage: Field configurable 12VDC/24 VDC dual voltage solenoid
- Mounting tabs and shims
- Self-adhesive neoprene filler for retrofits

© 2024 Allegion plc
005009, Rev. 10/24

VON DUPRIN®

6100 Series

Strikes for Rim Exit Devices

Overview

Von Duprin electric strikes are known for their reliability, durability and security. The 6100 Series strikes are designed to withstand abuse. Their heavy-duty stainless steel construction is UL1034 listed.

6100 Series electric door strikes are designed for use with a variety of rim exit devices including rim nightlatch. Electrified strikes allow remote release of a locked door by activating a movable lip (keeper) using an entry/exit button or credential reader and can be a cost effective means for managing access. 6100 Series strikes come standard as 24 VDC in fail secure mode. 12 VDC and AC operation can be selected, as can fail safe mode and other options that enable you to configure these strikes to fit your exact needs.

Use 6100 Series electric strikes for retrofit applications or new construction. To assure the proper selection of an electric strike on new applications, lockset compatibility charts are shown on the next page. When using a lockset not listed or if retrofitting a strike to an existing application, please contact Von Duprin technical support for application assistance.

Features & Benefits

- Five configurations available for rim exit and nightlatch devices
- Heavy-duty stainless steel construction
- Strike box allows horizontal adjustment to compensate for misalignment of the door or frame
- 24 VDC standard with 12 VDC and AC operation optional
- Two-piece plug connectors are furnished for ease of installation and removal during strike servicing
- Options include rectifier kit for VAC to VDC conversion, dual monitor switches, entry buzzer and Allegion Connect wire extension
- Six popular finishes available to suite with existing hardware
- UL 10C 3-hour fire-rated electric strike (models 6111, 6112 and 6113 – fail secure only)
- UL 1034 listed for burglary-resistant electric door strikes
- Static strength: 1500 lbs
- Dynamic strength: 70 ft-lbs
- UL 294 listed for access control system

VON DUPRIN®

6100 Series
Strikes for Rim Exit Devices

Model Specifications						
Model number		6111	6112	6113	6114	6121
Retrofits model		VD 3031	FA 310-4	VD 3011 VD 3021	FA 310-5	FA 310-4-100
Latchbolt throw		3/4"	3/4"	3/4"	3/4"	3/4"
Face plate length		6"	9"	6"	7-1/2"	9-1/8"
Backbox depth		1-5/8"	1-11/16"	1-15/16"	N/A	N/A
Lockset		Rim exit device	Rim exit device	Rim exit device	Rim nightlatch	Rim exit device
Number of doors	Single	•	•	•	•	---
	Double door with mullion	•	---	---	---	---
	Double door without mullion	---	---	---	---	•
Door/frame type	Hollow metal	•	•	•	•	•
	Aluminum	•	•	•	•	•
	Wood	•	•	•	---	•
Options	Blade stop shim	Yes	No	Yes	No	No
	DS or DS-LC (dual monitor switches)	Yes	Yes	Yes	Yes	Yes
	EB (entry buzzer - fail-secure only)	Yes	Yes	Yes	Yes	Yes
Certifications/ Listings	UL 1034	•	•	•	•	•
	UL 10C Single Door	3 hour	3 hour	3 hour	---	---
	UL 10C Pair Door*	90 Minutes	90 Minutes	90 Minutes	---	---
Application notes		1	2	3	4	5

*With manufacturer's mullion.

Note: 16 VDC and 28 VDC solenoid are sold as replacement parts for existing strikes. Please contact customer care for details.

Application notes:

1. 1/2" projection blade stop shim 010055-XX available for use on cased opening or blade stop frames. Specify when using 55 rim devices. May also be used with vertical rod exit devices noted on previous page x Pullman latch LBR (non-fire rated).
2. When used to replace Folger Adam 310-4, minor fame prep modification required.
3. 1/2" projection blade stop shim 010055-XX available for use on cased opening or blade stop frames (non-fire rated).
4. Surface applied strike designed to replace Folger Adam 310-5 with different mounting hole locations from Folger Adam.
5. Designed to mount on inactive leaf.

Rim Exit Device Compatibility for 6111, 6112, 6113 and 6121 Strikes

Manufacturer	Device
Von Duprin	22, 33A, 35A, 551, 88, 98, 99 8827 LBR4 x Pullman latch Non-Fire rated 9827 LBR4 x Pullman latch Non-Fire rated 9927 LBR4 x Pullman latch Non-Fire rated
Falcon[2]	19-R, 24-R, 25-R
Falcon	1790
Precision[2]	2100
Sargent	2800, 6500, 6800, 8500, 8800, 9500, 9800[3], 9898
Yale	1500, 700

1. Strike must be factory modified, specify when using with a 55 Rim device.
2. Deadlocking feature will not properly function, consult factory.
3. Panic only, not fire-rated.
4. 6111 is recommended for LBR applications.

Note: When using a lockset not listed or when retrofitting an existing application, please contact Von Duprin technical support for application assistance.

6100 Series Power Requirements

Models	Voltage	Current	Duty	Amps	Ohms
All	12V	DC	Continuous	0.60	21
All	24V	DC	Continuous	0.33	83

Continuous duty = Energized 1 minute or more

Wiring

AC

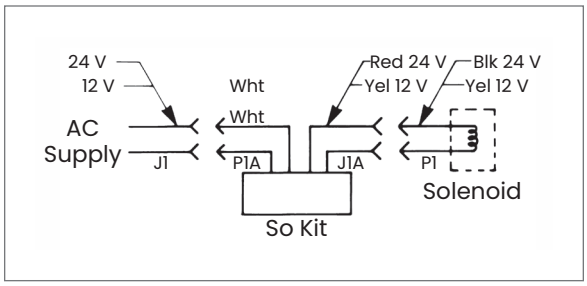

AC with buzzer

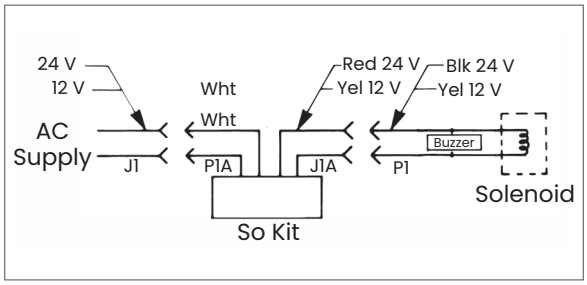

DC

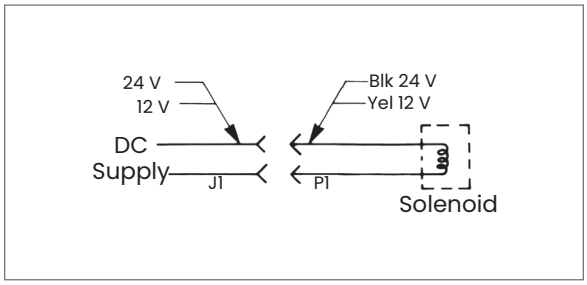

DC with Buzzer

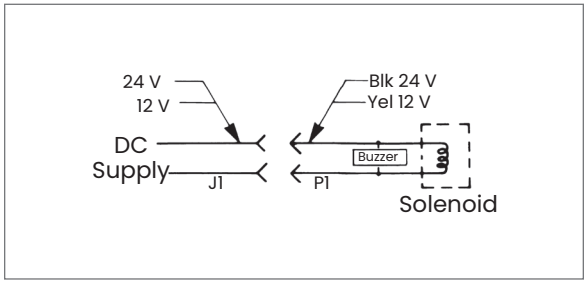

Optional DS (FSE Shown)

Wiring shown with strike locked
and monitor trippper depressed

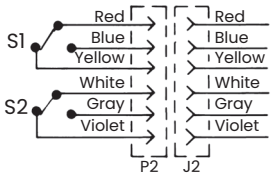

Different wiring configurations are used
depending on Backbox type and FS or FSE.

Dimensions

6111

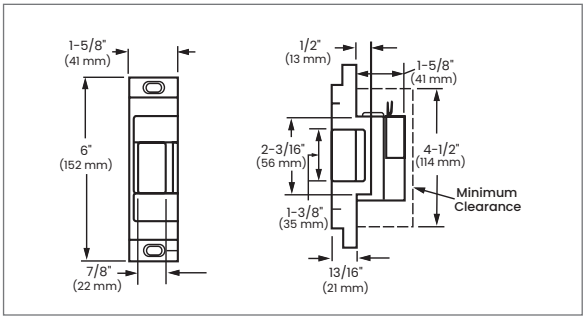

6112

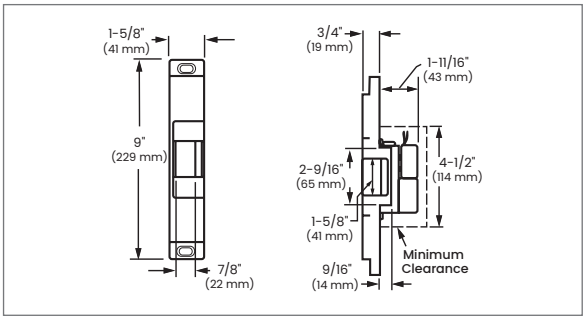

6113

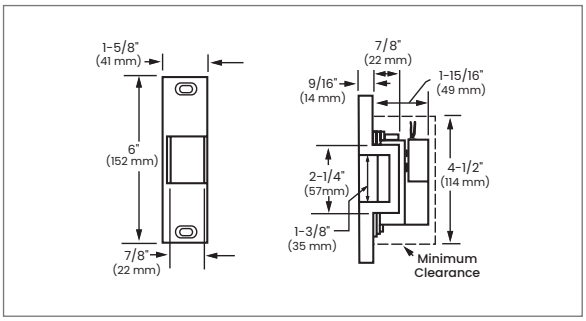

6114

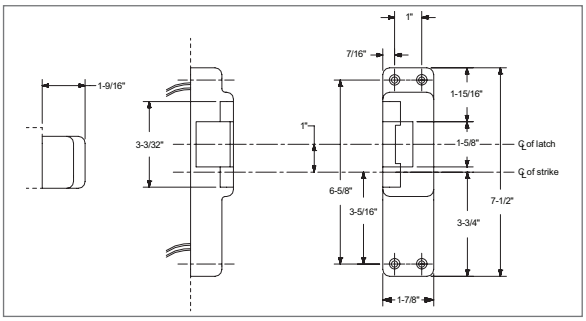

6121

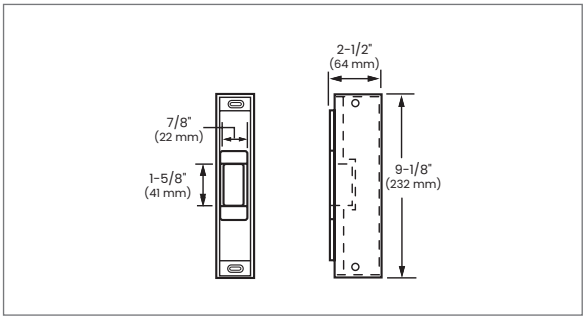

Ordering Information

6112	-	FSE	-	DS	-	24	-	S024	-	US3	-	EB	-	CON
Model		Power failure mode		Dual switch*		Voltage		Rectifier kit*		Finish		Buzzer*		Allegion Connect*
1		2		3		4		5		6		7		8

* Optional

Selections correspond with the numbers above.

1	Model
Reference specification chart to make the proper model selection	
2	**Power failure mode**
FSE	Fail-secure. Requires power to be applied to unlock the strike lip. On loss of power, the strike lip is locked. Fire-rated.
FS	Fail-safe. Requires power to be applied to lock the strike lip. On loss of power, the strike lip is unlocked. Non-fire-rated.
3	**Dual switch (optional)**
DS	Monitors latch bolt and lock status. DS switches rated for 24 VDC at .050-2.0 amps.
DS-LC	Low current option for computer monitoring. Monitors latch bolt & lock status. DS-LS switches rated for 24 VDC at .050 amp or less.
4	**Voltage (VDC)**
24	Low voltage DC power
12	Low voltage DC power

If AC power is required, specify rectifier kit.

5	Rectifier kit (optional)
S012	Converts 12 VAC voltage to 12 VDC to operate the solenoid
S024	Converts 24 VAC voltage to 24 VDC to operate the solenoid
6	**Finish**
US3/BHMA 605	Plated polished brass on stainless steel
US4/BHMA 606	Plated satin brass on stainless steel
US10/BHMA 612	Plated satin bronze on stainless steel
US10B/BHMA 613	Plated dark bronze, oil rubbed on stainless steel
US32/BHMA 629	Stainless steel, polished
US32D/BHMA 630	Stainless steel, satin
7	**Buzzer (optional)**
EB	Entry Buzzer
Only available if Fail-Secure (FSE) is specified.	
8	**Allegion Connect**
CON	Allegion Connect Connector

6 in. wire extension harness available

© 2024 Allegion plc
005282, Rev. 01/24

VON DUPRIN®

6200 Series

Strikes for Mortise or Cylindrical Devices

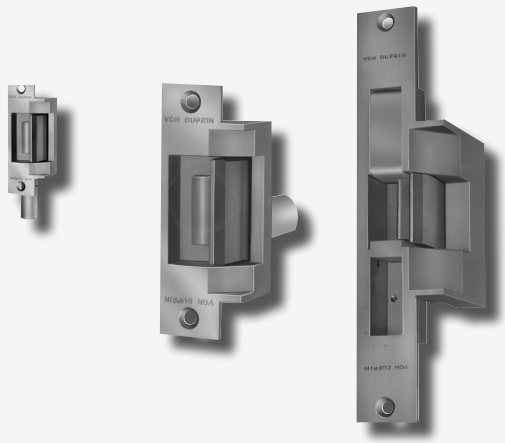

Overview

Von Duprin electric strikes are known for their reliability, durability and security. The 6200 Series strikes are designed to withstand abuse. Their heavy-duty stainless steel construction is fully UL 1034 and UL 10C listed.

6200 Series electric door strikes are designed for use with a variety of mortise or cylindrical locksets. Electrified strikes allow remote release of a locked door by activating a movable lip (keeper) using an entry/exit button or credential reader and can be a cost effective means for managing access. 6200 Series strikes come standard as 24 VDC in fail secure mode. 12 VDC and AC operation can be selected, as can fail safe mode and other options that enable you to configure these strikes to fit your exact needs.

Use 6200 Series electric strikes for retrofit applications or new construction. To assure the proper selection of an electric strike on new applications, lockset compatibility charts are shown on the next page. When using a lockset not listed or when retrofitting a strike to an existing application, please contact Von Duprin Technical Support for application assistance.

Features & Benefits

- 17 configurations available for cylindrical and mortise applications
- Heavy-duty stainless steel construction
- 24 VDC standard with 12, 16 and 28 VDC operation optional
- Two-piece plug connectors are furnished for ease of installation and removal during strike servicing
- Options include rectifier kit for VAC to VDC conversion, dual monitor switches, entry buzzer and Allegion Connect wire extension
- Six popular finishes available to suite with existing hardware
- UL 10C 3-hour fire-rated (fail secure only)
- UL 1034 listed for burglary-resistant electric door strikes
- Static strength: 1500 lbs
- Dynamic strength: 70 ft-lbs
- UL 294 listed for access control system

* Certification detail is listed within Model Specifications.

6200 Series Power Requirements

Models	Voltage	Current	Duty	Amps	Ohms
All	12V	DC	Continuous	0.60	21
All	16V	DC	Continuous	0.40	38
All	24V	DC	Continuous	0.33	83
All	28V	DC	Continuous	0.25	111

Continuous duty = Energized 1 minute or more

Mortise Lockset Compatibility[1, 3]
6211, 6211AL, 6211WF, 6212, 6213, 6214, 6215, 6221, 6222, 6223, 6224, 6224AL, 6225 and 6226 strikes

Manufacturer	Model number
Von Duprin	7500
Adams Rite	4510, 4710
Baldwin	6000
Best	24H, 30H, 45H
Corbin	9000
Falcon	MA2300, MA2500, MA2600, MA3300, MA3500, MA3600
Precision	Mortise
Russwin	Mortise
Sargent	7700, 8100, 9000
Schlage	L9000, K30, K40, K50, K60
Yale	7030, 7130, 8600, 8700

Mortise Lockset Compatibility[1, 3]
6210

Manufacturer	Model number
Von Duprin	7500
Best	30H (not 45H/47H)
Corbin/Russwin	ML2200, 5000, 9000, CR2200 (not 2000)
Falcon	MA100, MA200, MA300, MA400, MA500, MA600
Sargent	7700, 8100 (not 7800/8200)
Schlage	L9000
Yale	8700 (not 8800)

Cylindrical Lockset Compatibility[1, 3]
6211, 6211AL, 6211WF, 6212, 6213, 6214, 6215, 6221, 6222, 6223, 6224, 6224AL, 6225 and 6226 strikes

Manufacturer	Cylindrical latchbolt projection
Baldwin	1/2" – 3/4" (13 mm – 19 mm)
Best	3/8" – 3/4" (10 mm – 19 mm)[2]
Corbin	1/2" – 3/4" (13 mm – 19 mm)
Falcon	1/2" – 3/4" (13 mm – 19 mm)
Russwin	1/2" – 3/4" (13 mm – 19 mm)
Sargent	1/2" – 3/4" (13 mm – 19 mm)
Schlage	3/8" – 3/4" (10 mm – 19 mm)[2]
Yale	1/2" – 3/4" (13 mm – 19 mm)

Note: When using device not listed or when retrofitting a strike to an existing application, please contact Von Duprin Technical Support for application assistance.

1. Von Duprin cannot guarantee compatibility, as other manufacturer's designs may change without notice.
2. Signalling may not function when using 3/8" (10 mm) throw bolt. Deadlocking cannot be guaranteed with all locks.
3. When using a lockset not listed or when retrofitting a strike to an existing application, please contact Von Duprin Technical Support for assistance.

Wiring

AC

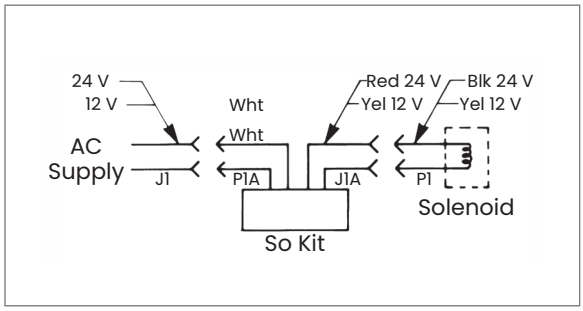

AC with Buzzer

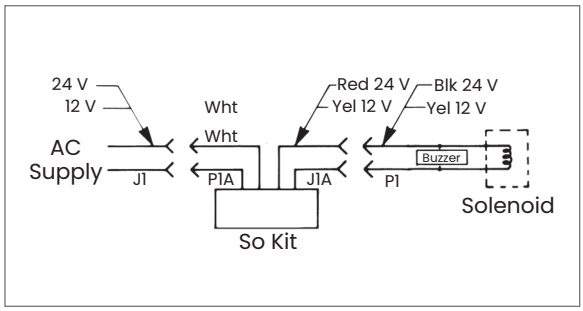

DC

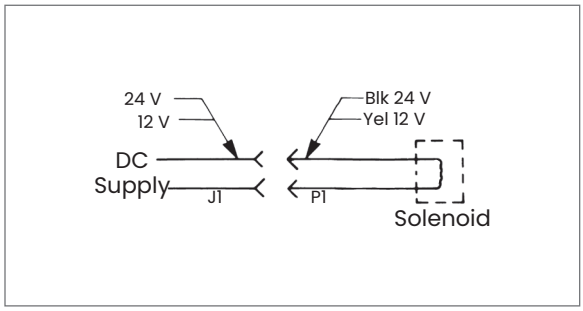

DC with Buzzer

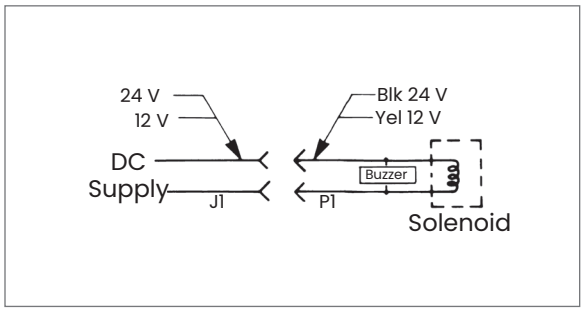

Optional DS (FSE Shown)

Wiring shown with strike locked and monitor trippper depressed

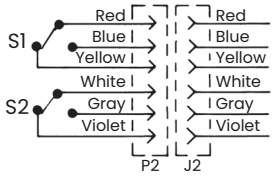

Different wiring configurations are used depending on Backbox type and FS or FSE.

Model Specifications

Model number		6210	6211	6211AL	6211WF	6212
Retrofits model		N/A	VD 3140 FA 712	FA 722	FA 732	VD 3146
Latchbolt throw		3/4"	3/4"	3/4"	3/4"	3/4"
Face plate length		4-7/8"	4-7/8"	4-7/8"	4-7/8"	6-3/8"
Backbox depth		1-3/4"	1-11/16"	1-11/16"	4-1/2"	1-21/32"
Lockset	Mortise without deadbolt	•	•	•	•	•
	Mortise with deadbolt 1" throw	---	---	---	---	---
	Cylindrical	---	•	•	•	•
Number of doors	Single	•	•	•	•	•
	Pair	---	---	---	---	---
Door and frame type	Hollow metal	•	•	---	---	•
	Aluminum	•	•	•	---	•
	Wood	---	---	---	•	---
Options	DS or DS-LC (dual monitor switches)	•	•	•	•	•
	EB (entry buzzer - fail-secure only)	•	•	•	•	•
	28 VDC AC rectifier kit	•	•	•	•	•
	16 VDC solenoid	•	•	•	•	•
Certifications/ Listings	UL 1034	•	•	•	•	•
	UL 10C	3 hour	3 hour	3 hour	3 hour	3 hour
	ANSI/BHMA 156.31, Grade 1	•	•	•	•	---
Application Notes		1	1	---	2	3

Application notes:

1. For use in ANSI prep at standard height. Strike pocket inserts are provided to accommodate different manufacturers deadlocking trigger locations.
2. Designed to replace Folger Adams 732. Wood frame horizontal solenoid location differs from Folger Adams. Requires additional frame prep when retrofitting.
3. Fits modified ANSI 115.2 cutout. Designed to replace Von Duprin 3146.

Model Specifications

Model number		6212WF	6213	6214	6215	6216	6221
Retrofits model		N/A	VD 3041, 3042, 3061, 3062	FA 310-2-3/4	FA 310-2	FA 310-3-1	VD 3071 VD 3072
Latchbolt throw		3/4"	3/4"	3/4"	3/4"	3/4"	3/4"
Face plate length		6-3/8"	6"	9"	9"	9"	6"
Backbox depth		4-1/2"	2-1/2"	2"	1-5/8"	2-7/8"	4-3/4"
Lockset	Mortise without deadbolt	•	•	•	•	---	•
	Mortise with deadbolt 1" throw	---	---	---	---	•	---
	Cylindrical	•	•	•	•	---	•
Number of doors	Single	•	•	•	•	•	---
	Pair	---	---	---	---	---	•
Door and frame type	Hollow metal	---	•	•	•	•	•
	Aluminum	---	•	•	•	•	•
	Wood	•	See note 1 below	---	---	•	•
Options	DS or DS-LC (dual monitor switches)	•	•	•	•	•	---
	EB (entry buzzer - fail-secure only)	•	•	•	•	•	•
	28VDC AC rectifier kit	•	•	•	•	•	•
	16VDC solenoid	•	•	•	•	•	•
Certifications/ Listings	UL 1034	•	•	•	•	•	•
	UL 10C	3 hour	3 hour	3 hour	3 hour	3 hour	3 hour*
Application notes		---	1	---	---	2	3

* When pair door has inactive leaf.

Application notes:

1. Includes wood frame for retrofit applications.
2. Deadbolt must be manually operated.
3. Open back electric strike for use on 1-3/4" (44 mm) thick double door applications. 4-3/4" (120 mm) minimum stile required. For a concealed vertical rod and mortise device combination, specify "A" backbox.

VON DUPRIN®

6200 Series

Strikes for Mortise or Cylindrical Devices

Model Specifications

Model number		6222	6223	6224	6224AL	6225	6226
Retrofits model		FA 310-2-3/4 OB	VD 3091 VD 3092	FA 310-2-3/4	FA 310-2RF	FA 310-2 OB	FA 310-2
Latchbolt throw		3/4"	3/4"	3/4"	3/4"	3/4"	3/4"
Face plate length		9"	6"	9"	9"	9"	9"
Backbox depth		2"	4-1/2"	2"	1-5/8"	1-5/8"	1-5/8"
Lockset	Mortise without deadbolt	•	•	•	•	•	•
	Mortise with deadbolt 1" throw	---	---	---	---	---	---
	Cylindrical	•	•	•	•	•	•
Number of doors	Single	---	---	---	---	---	---
	Pair	•	•	•	•	•	•
Door and frame type	Hollow metal	•	•	•	---	•	•
	Aluminum	•	•	•	•	•	•
	Wood	---	•	---	---	---	---
Options	DS or DS-LC (dual monitor switches)	---	•	•	•	---	•
	EB (entry buzzer - fail-secure only)	•	•	•	•	•	•
	28VDC AC rectifier kit	•	•	•	•	•	•
	16VDC solenoid	•	•	•	•	•	•
Certifications/ Listings	UL 1034	•	•	•	•	•	•
	UL 10C	3 hour*	3 hour*	3 hour*	3 hour*	3 hour*	3 hour*
Application notes		1	2	3	4	5	6

* When pair door has inactive leaf.

Application notes:

1. Open back electric strike for use on 1-3/4" (44 mm) thick double door applications
2. Closed back electric stirke for use on 1-3/4" (44 mm) thick double door applications. 4-3/4" (120 mm) minimum stile required. For a concealed vertical rod and mortise device combination specify "A" backbox.
3. Closed back electric strike for use on 1-3/4" (44 mm) or 2-1/4" (57 mm) thick double door applications.
4. Closed back electric strike for use on 1-3/4" (44 mm) or 2-1/4" (57 mm) thick aluminum double door applications.
5. Open back electric stirke for use on 1-3/4" (44 mm) thick double door applications.
6. Closed back electric strike for use on 1-3/4" (44 mm) or 2-1/4" (57 mm) thick double door applications.

Dimensions

6210

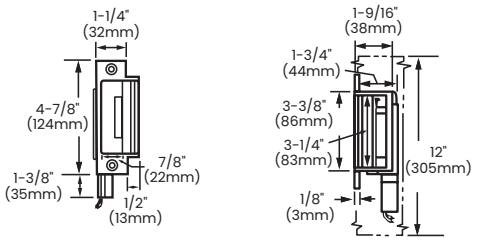

6211

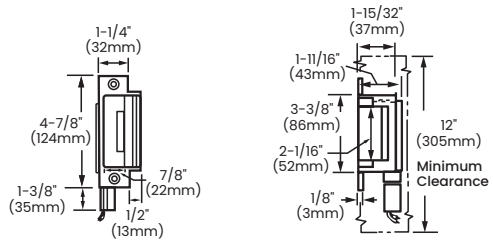

6211AL

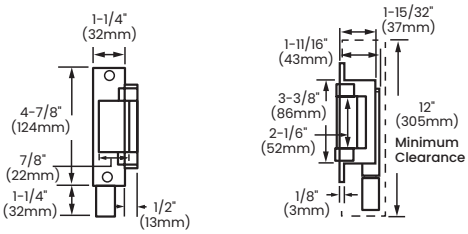

6211WF

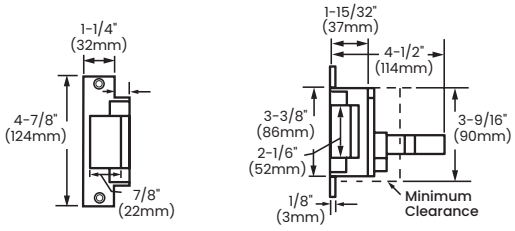

6212

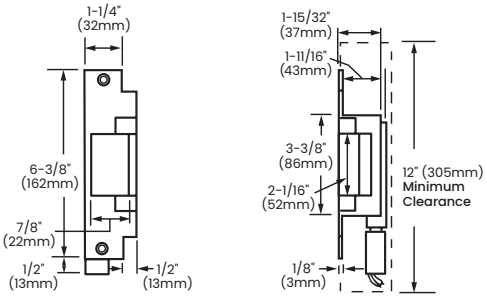

6212WF

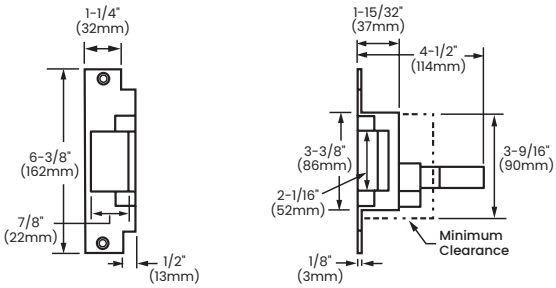

6213

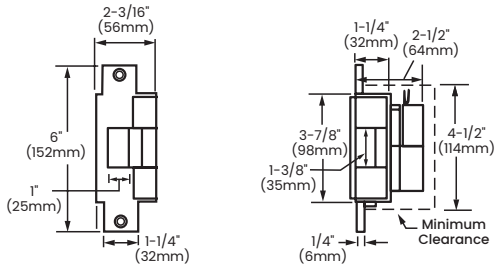

6214

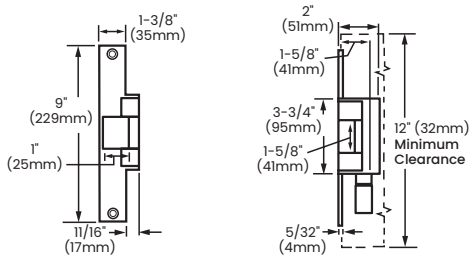

6215

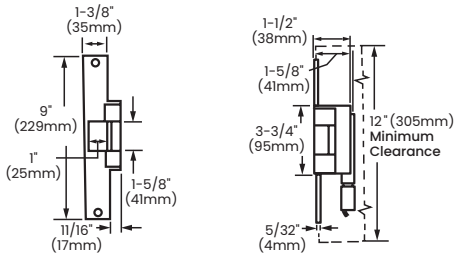

6216

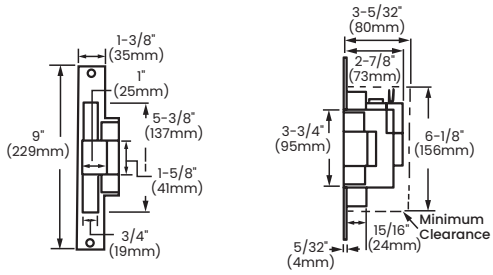

Dimensions

6221

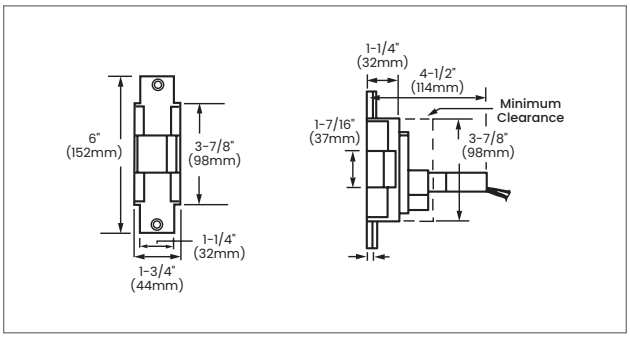

6222

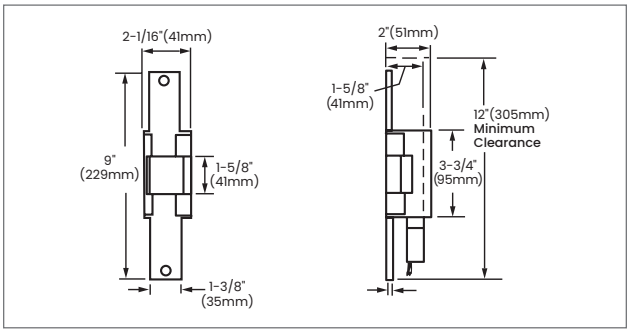

6223

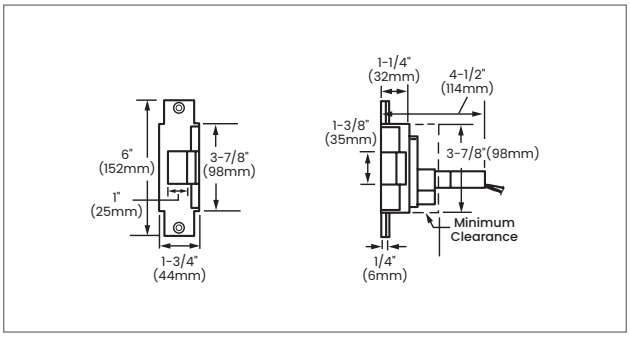

6224

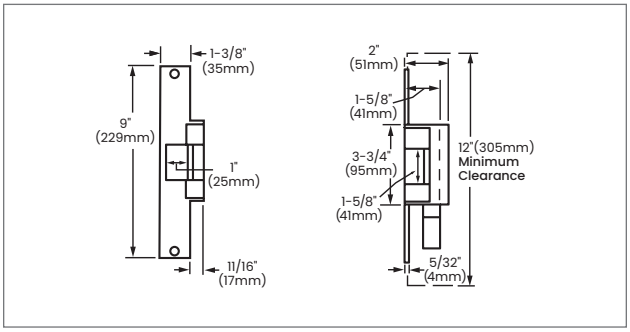

6224AL

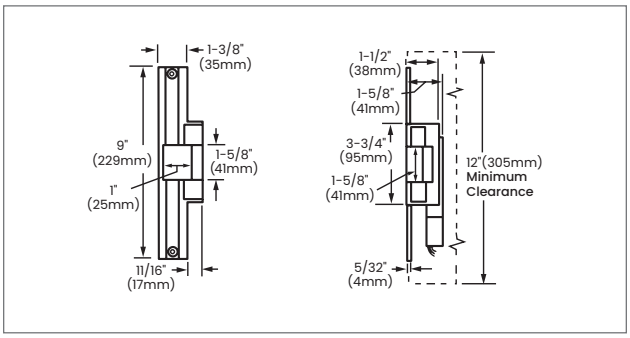

6225

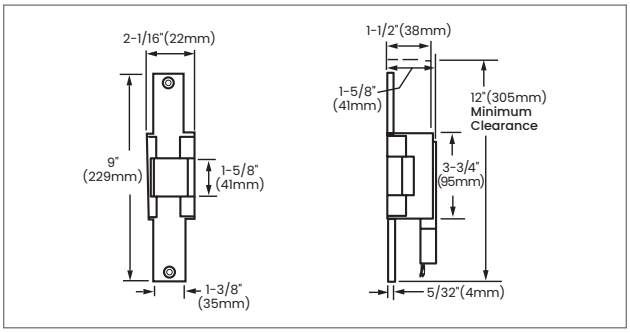

6226

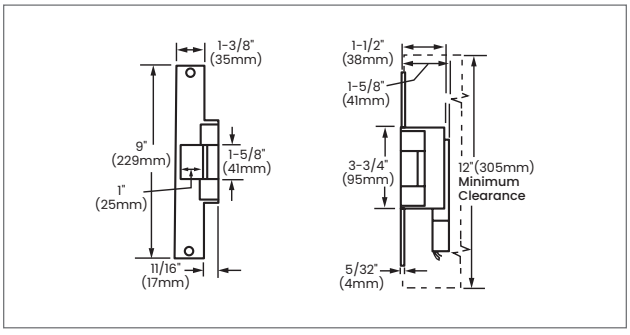

Ordering Information

6210	-	FSE	-	DS	-	24	-	S024	-	US3	-	EB	-	CON
Model		Power failure mode		Dual switch*		Voltage		Rectifier kit*		Finish		Buzzer*		Allegion Connect*
1		2		3		4		5		6		7		8

* Optional

Selections correspond with the numbers above.

1	Model
Reference specification chart to make the proper model selection	
2	**Power failure mode**
FSE	Fail-secure. Requires power to be applied to unlock the strike lip. On loss of power, the strike lip is locked. **Fire-rated.**
FS	Fail-safe. Requires power to be applied to lock the strike lip. On loss of power, the strike lip is unlocked. **Non-fire-rated.**
3	**Dual switch (optional)**
DS	Monitors latch bolt and lock status. DS switches rated for 24 VDC at .050 - 2.0 amps.
DS-LC	Low current option for computer monitoring. Monitors latch bolt & lock status. DS-LS switches rated for 24 VDC at .050 amp or less.
4	**Voltage (VDC)**
24	Low voltage DC power (standard)
12	Low voltage DC power
16	Low voltage DC power (solenoid sold separately)
28	Low voltage DC power (solenoid sold separately)

If AC power is required, specify rectifier kit.

5	Rectifier kit (optional)
S012	Converts 12 VAC voltage to 12 VDC to operate the solenoid
S024	Converts 24 VAC voltage to 24 VDC to operate the solenoid
6	**Finish**
US3/BHMA 605	Plated polished brass on stainless steel
US4/BHMA 606	Plated dull brass on stainless steel
US10/BHMA 612	Plated dull bronze on stainless steel
US10B/BHMA 613	Plated dark bronze, oil rubbed on stainless steel
US32/BHMA 629	Stainless steel, polished
US32D/BHMA 630	Stainless steel, satin
7	**Buzzer (optional)**
EB	Entry Buzzer

Only available if Fail-Secure (FSE) is specified.

8	Allegion Connect
CON	Allegion Connect Connector

6 in. wire extension harness available

© 2024 Allegion plc
005368, Rev. 09/24

VON DUPRIN®

6300 Series

Surface Mounted Strike for Rim Exit Devices

Overview

Von Duprin electric strikes are known for their reliability, durability and security. The 6300 Series strike is designed to withstand abuse with its heavy-duty stainless steel certification construction is fully UL 1034 and UL 10C listed.

The 6300 Series strike is designed for use with a variety of rim exit devices. As an electrified strike, it allows remote release of a locked door by activating a movable lip (keeper) using an entry/exit button or credential reader and can be a cost effective means for managing access. It is ideal for aftermarket applications and designed to install without modifying or altering the door frame.

Designed for fail-secure (FSE) only mode, the 6300 Series strike achieves compliance with UL10C for 3-hour fire-rated openings. It also enables fieldselectable 12 or 24 VDC with AC conversion optional.

To assure the proper selection of an electric strike on new applications, lockset compatibility charts are shown on the next page. When using a lockset not listed or when retrofitting a strike to an existing application, please contact Von DuprinTechnical Support for application assistance.

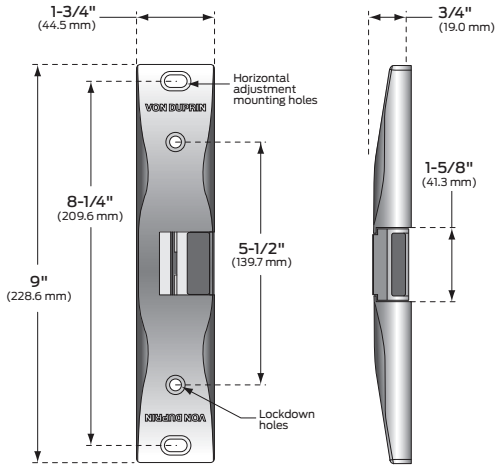

Features & Benefits

- Designed for use with rim exit devices
- Heavy-duty stainless steel construction in BHMA 630 satin finish
- Surface mounted — requires no alteration or cutting to existing frame
- Field selectable voltage 12VDC or 24VDC
- Plug-in voltage connectors included for ease of installation and removal during strike servicing
- Non-handed design provides greater flexibility
- UL 10C 3-hour fire-rated (fail secure only)
- UL 1034 listed for burglary-resistant electric door strikes
- UL 294 listed for access control system
- Dynamic strength: 70 ft-lbs
- Static strength: 1500 lbs

6300 Series Power Requirements					
Models	Voltage	Current	Duty	Amps	Ohms
6300	12V	DC	Continuous	0.50	22
6300	24V	DC	Continuous	0.24	89

Continuous duty = Energized 1 minute or more

Rim Exit Device Compatibility 6300 Strikes	
Manufacturer	Model Number
Von Duprin	VD 22/22-F Rim
Von Duprin	VD 33A/35A Rim*
Von Duprin	VD 55 Rim
Von Duprin	VD 88 Rim
Von Duprin	VD 98/99 and 98/99-F Rim
Falcon	Falcon 24/24-F Rim*
Falcon	Falcon 25/25-F Rim
Falcon	Falcon 19/19-F Rim
Falcon Doromatic	Falcon Doromatic 1590*
Falcon Doromatic	Falcon Doromatic 1790*
Falcon Doromatic	Falcon Doromatic 2090*

*Stile and frame condition may affect compatibility.

Model Specifications	
Model number	6300
Retrofits model	N/A
Latchbolt throw	3/4"
Face plate length	9"
Projection	3/4"
Lockset	Rim exit device
Number of doors	Single or pair with mullion
Door/frame type	Hollow metal, aluminum and wood
EB (entry buzzer)	Optional
Certifications/ listings	UL 1034, UL 10C, ULw294, CSFM
Application notes	Surface mounted electric strike ideal for aftermarket applications. Strike designed for use with Von Duprin 98/99, however it can be used with most rim exit devices.

AC

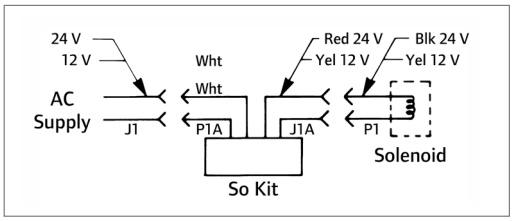

AC with buzzer

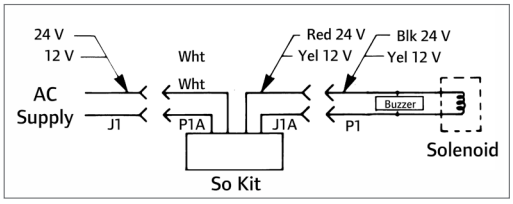

DC

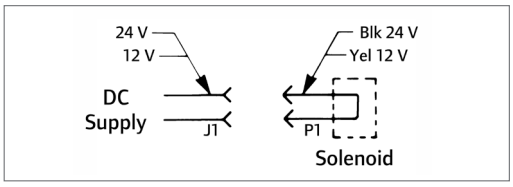

DC with Buzzer

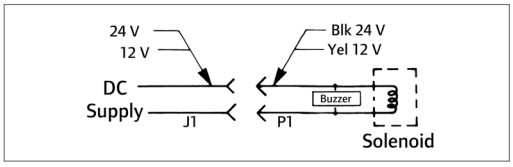

Standard Features

- Power failure mode: Fail-secure only (FSE)
- Voltage: field selectable 24 VDC or 12 VDC
- Finish: stainless steel, satin (BHMA 630/US32D)

Ordering Information

6300 - S024 - EB

Model	Rectifier kit*	Dual switch*
1	2	3

* Optional

Selections correspond with the numbers above.

1	Model
6300	Surface mounted strike for rim exit devices
2	**Rectifier Kits (optional)**
S012	Converts 12 VAC voltage to 12 VDC to operate the solenoid
S024	Converts 24 VAC voltage to 24 VDC to operate the solenoid

3	Buzzer (optional)
EB	Entry Buzzer

© 2024 Allegion plc
003242, Rev. 01/24

VON DUPRIN®

6400 Series

Modular Strike for Mortise & Cylindrical Locksets

Overview

The 6400 electric door strike from Von Duprin is designed to be modular and highly configurable to fit nearly any mortise or cylindrical lock. This versatile strike allows the installer to insert and lock-in the deadbolt keeper or plug and deadlatch ramp anywhere within its 3 1/8" vertical opening to fit the latch position and functional needs. This, combined with a 1 /8" horizontal adjustment, makes this easy-to-install design a good fit for installations where misalignment or a tight fit may be a problem.

Use it as a time-saving, “go to” strike. The 6400 comes ready for use with prewired plug-in connectors for 12 or 24 VDC voltage that can be changed over to 12 or 24 VAC without a converter kit, two faceplates—one each for offset and centerline locks as well as a trim filler plate, mounting tabs and shims and a self-adhesive template for frame cuts. An optional “plug in” latchbolt monitor is also available and can be added in the field at any time after installation.

Features & Benefits

- Modular design fits cylindrical and nearly any mortise lock
- Heavy-duty stainless steel construction in BHMA 630 satin finish
- Vertical adjustments allow for alignment with a wide variety of mortise locks with offset latches
- Horizontal adjustment of up to 1/8" improves fit on tight door preps
- Can accommodate up to 1" deadbolt (for night latch only)
- Field selectable voltage 12 or 24VDC and 12 to 24VAC
- Plug-in voltage connectors are included for ease of installation and removal during strike servicing
- Optional plug-in latchbolt monitor can be added in the field
- Non-handed, unique internal solenoid design prevents keeper from heating up
- Low current draw (0.19 amps @ 24 VDC)
- 3-hour fire-rated to UL 10C (fail secure only)
- UL 1034 listed for burglary-resistant electric door strikes
- UL 294 listed for access control system
- Static strength: 1500 lbs
- Dynamic strength: 70 ft-lbs

Lockset Compatibility

Vertical adjustment of the deadbolt keeper or deadlatch ramp allows for alignment with a wide variety of mortise locks with offset latches. Accommodates up to 1" deadbolt*. Up to 1/8" horizontal adjustment for misaligned frames.

* Night-latch function only, bolt will not release

6400 Series Power Requirements

Model	Mode	Voltage	Duty	Sound	Amps[1]	Ohms[2]
6400	Fail-locked	12 VDC	Continuous	Silent	.375	37
6400	Fail-locked	24 VDC	Continuous	Silent	.190	148
6400	Fail-locked	12-24 VAC	Intermittent	Buzz	.280 - .565	37

Intermittent duty = Energized less than 1 min. with duty ratio 1:5; Continuous duty = Energized 1 min. or more.

1. Ratings are based on maximum current draw at +10°C and include initial power-up current draw.
2. Nominal resistance at +25°C +/- 7% tolerance.

Wiring Instructions

Use the appropriate wire harness supplied.

- 12V for 12VDC and 12-24VAC
- 24 for 24VDC only

Attach the red wire to (+) positive of the power supply. Attach the black wire to the (-) negative of the power supply. If using AC power, polarity is not observed.

Note: If a suppression diode is required for access control, observe proper polarity.

Latch monitor wires

Black = Common (C)

Blue = Normal Close (NC)

Orange = Normal Open (NO)

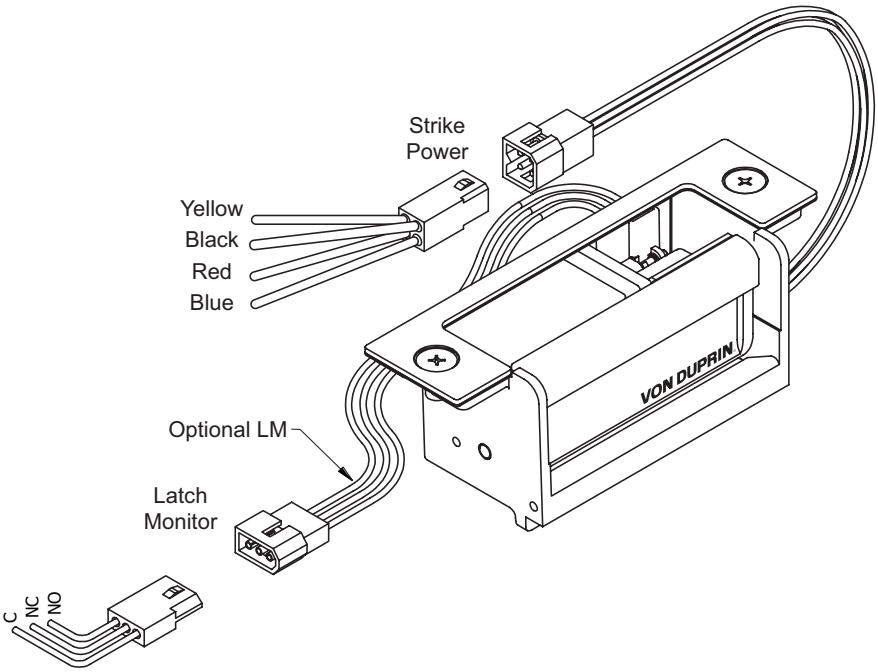

Model Specifications

Model number	6400
Latchbolt throw	3/4" (Also accomodates 1" deadbolt as a nightlatch only - no release)
Face plate length	4-7/8" (Includes two face plates: Centerline and Off-set latch entries)
Backbox depth	1-3/4"
Finish	US 32D/BHMA 630
Lockset	Cylindrical, mortise, mortise exit
Number of doors	Single
Door/frame type	Hollow metal, aluminum & wood
Options	2 Rectifier kits: • S012 Converts 12 VAC voltage to 12 VDC to operate the solenoid • S024 Converts 24 VAC voltage to 24 VDC to operate the solenoid EB (Entry Buzzer)
Certifications/ Listings	ANSI/BHMA A156.31 Grade 1, 3-hour fire rated to UL 10C (FSE only), UL 1034, UL 294, CSFM
Application notes	Modular electric strike ideal for aftermarket applications. Fail-secure only for fire-rated openings.

Dimensions

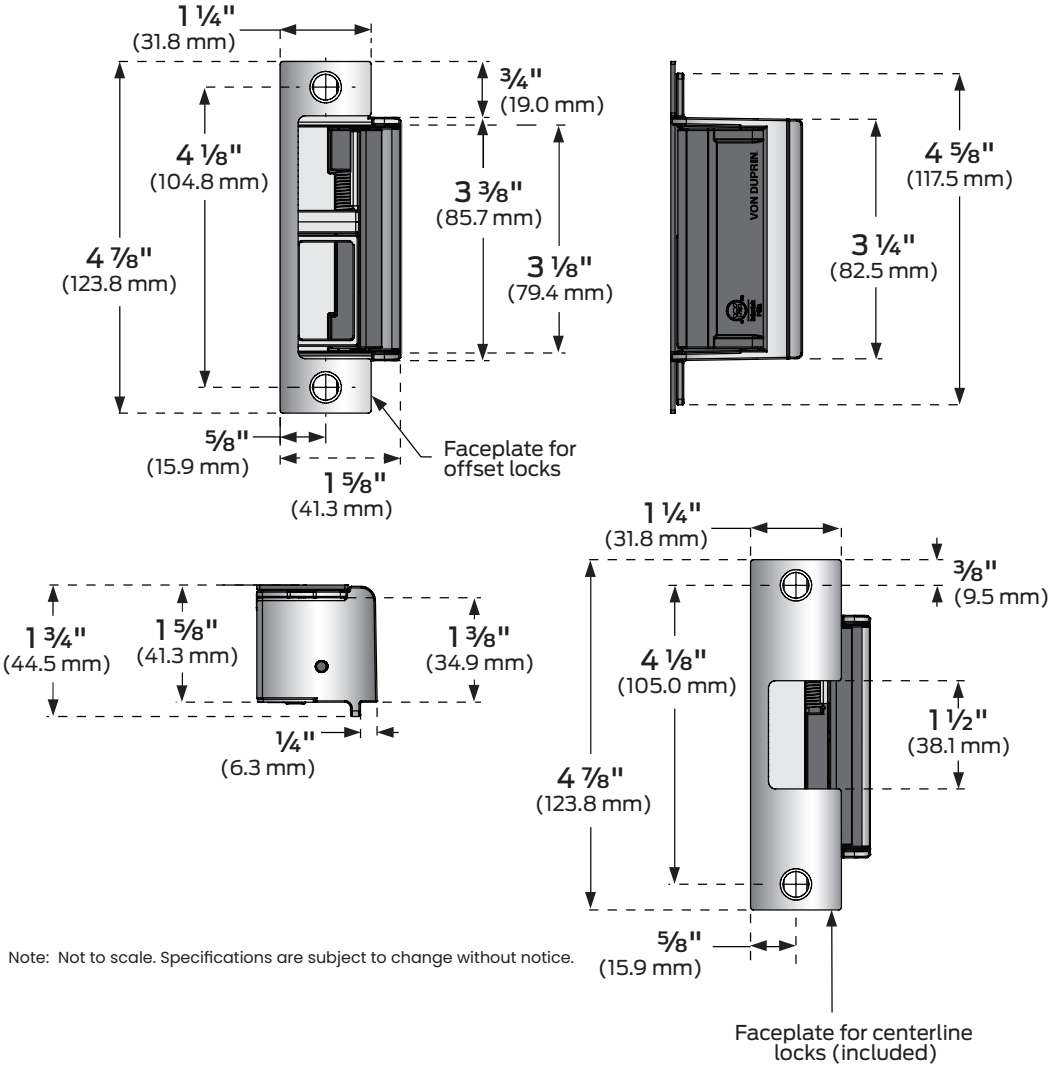

Note: Not to scale. Specifications are subject to change without notice.

Ordering Information

6400 - S024 - EB

Model	Rectifier Kit*	Buzzer*
1	2	3

* Optional

Selections correspond with the numbers above.

1	**Model**
6400	Modular Strike
2	**Rectifier Kit (optional)**
	S012 Converts 12 VAC voltage to 12 VDC to operate the solenoid S024 Converts 24 VAC voltage to 24 VDC to operate the solenoid
3	**Buzzer (optional)**
EB	Entry buzzer

Accessories

- LM6400 Latchbolt monitor—indicates when door is latched (ships separately)

Standard Features

- Power failure mode: Fail-secure only (FSE)
- Voltage: Field selectable 12 or 24 VDC and 12 or 24 VAC voltage
- Finish: Stainless steel, satin (BHMA 630/US 32D)
- Centerline and offset face plates included
- Also includes: two plug-in voltage connectors, self-adhesive template for frame cuts, trim filler plate, mounting tabs and shims, as well as tamper-resistant screws with a security driver bit

© 2024 Allegion plc
009011, Rev. 01/24

M490/492

Electromagnetic Locks

Overview

M400 Series electromagnetic locks from Schlage are designed with the customer in mind to be robust, easy-to-install, and secure. The unique bayonet mounting feature makes installation easier, allowing the installer to have their hands free during the mounting process.

All M400 Series electromagnetic locks are symmetrical with field-selectable handing, allowing optimum placement of the magnet no matter the application. They are designed to provide automatic voltage sensing for 12 and 24 volts along with polarity protection to make wiring less complex. M490 models are tested and certified to meet or exceed UL 1034 and BHMA 1500 lb. hold force requirements.

The M490 electromagnetic locks come in four configurations to meet your specific security needs. Single and double door models are offered in standard configurations. Plus versions of these models with "P" designations add intelligent sensing and reporting features needed to integrate with access control systems along with additional available options. Kits are also available for top jam, double door, and glass door applications.

Features & Benefits

- 1500 lb. hold force rating for maximum security applications
- "Plus" models offer Magnetic Bond Sensor (MBS), adjustable Relock Time Delay (RTD) and Door Position Switch (DPS)
- Automatic Voltage Selection (AVS)
- Symmetrical design with field-selectable handing for optimum placement
- Bayonet mount simplifies installation by eliminating the need to hold lock overhead while securing
- Armature mount pivot feature compensates for slight opening imperfections
- Optional mounting kits available for top jamb mount, double door and HERCULITE® brand glass doors
- Aluminum housing in 628 satin finish
- ANSI/BHMA 156.23 Grade 1, UL 1034, UL 10C, UL 294, cUL, CFSM certifications
- Limited lifetime warranty on magnetic coil assembly

Additional Features

All Models

- Automatic Voltage Selection (AVS) senses the voltage applied to the lock and responds accordingly

M490P/M492P

- Magnetic Bond Sensor (MBS) monitors the strength of the bond between the lock and armature so you know the door is secure
- Door Position Switch (DPS) monitors whether the door is open or closed
- Relock Time Delay (RTD) provides a relock delay that is adjustable from 0.5 to 30 seconds

Optional accessories (P models only)

- ATS/LED combines Anti-Tamper Switch (ATS) with Magnetic Bond Sensor in one kit
  - ATS provides an indication that the cover of the magnet is securely fastened to the lock and that the on-board circuitry is secure
  - Magnetic Bond Sensor indicator (LED) provides visual indication of magnetic bond at the lock

Optional Accessories (For All)

- Glass door bracket kit designed for use with HERCULITE® brand glass door
- Top jamb (inswinging doors) kit
- Double door connector kit (converts two single magnetic locks to a double)

Filler plate

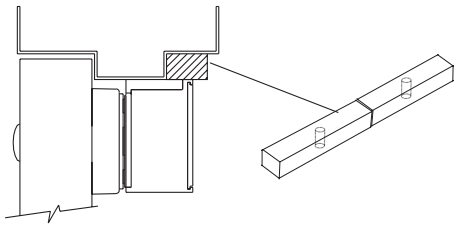

Angle bracket

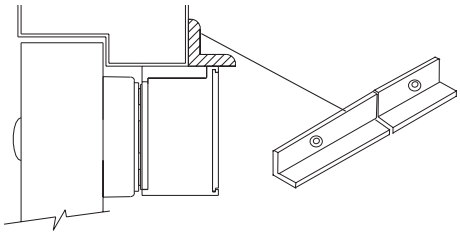

M490/M492 Electromagnetic Lock Specifications

Specification	M490/M490P	M492/M492P
Holding force	Meets or exceeds BHMA standard of 1500 lbs.	Meets or exceeds BHMA standard of 1500 lbs.
Door type	Single	Double
Input voltage (auto selected)	12/24 VDC	12/24 VDC
Current draw	.65A @ 12 VDC .35A @ 24 VDC	1.3A @ 12 VDC .7A @ 24 VDC
Height	3"	3"
Length	12-1/2"	25-1/16"
Depth	1-3/4"	1-3/4"
Weight (approximate)	14 lbs.	28 lbs.
Certifications	UL 10C, UL 1034, UL 294, ANSI/BHMA A156.23, cUL, CSFM	UL 10C, UL 1034, UL 294, ANSI/BHMA A156.23, cUL, CSFM
Temperature	0° to 49°C (32° to 120° F)	0° to 49°C (32° to 120° F)
Wire gauge	14-22 AWG	14-22 AWG

Filler Plates and Angle Brackets Specifications

Filler Plates

Width x Height	Length	Plate No.
1-1/4" x 1/8"	12-1/2"	4901F
1-1/4" x 1/4"	12-1/2"	4902F
1-1/4" x 3/8"	12-1/2"	4903F
1-1/4" x 1/2"	12-1/2"	4904F
1-1/4" x 5/8"	12-1/2"	4905F
3/4" x 1/2"	12-1/2"	4906F
3/4" x 5/8"	12-1/2"	4907F
3/4" x 3/4"	12-1/2"	4908F

Angle Brackets

Width x Height	Length	Bracket No.
1" x 1"	12-1/2"	4901A
1-1/2" x 1"	12-1/2"	4902A
1-1/2" x 1-1/2"	12-1/2"	4903A
1-1/2" x 2"	12-1/2"	4904A
1-1/2" x 2-1/2"	12-1/2"	4905A

Allegion, the Allegion logo, Schlage, and the Schlage logo are trademarks of Allegion plc, its subsidiaries and/or affiliates in the United States and other countries. Herculite® is a registered trademark of Vitro, S.A.B. de C.V., and is not affiliated with Allegion or any of its subsidiaries.

© 2024 Allegion plc
004204, Rev. 01/24

M450/452

Electromagnetic Locks

Overview

M400 Series electromagnetic locks from Schlage are designed with the customer in mind to be robust, easy-to-install, and secure. The unique bayonet mounting feature makes installation easier, allowing the installer to have their hands free during the mounting process.

All M400 Series electromagnetic locks are symmetrical with field-selectable handing, allowing optimum placement of the magnet, no matter the application. They are designed to provide automatic voltage sensing for 12 and 24 volts along with polarity protection to make wiring less complex. M450 models are tested and certified to meet or exceed UL 1034 and BHMA 1000 lb hold force requirements.

The M450 electromagnetic locks come in four configurations to meet your specific security needs. Single and double door models are offered in standard configurations. Plus versions of these models with "P" designations add intelligent sensing and reporting features needed to integrate with access control systems along with additional available options. Kits are also available for top jam, double door, and glass door applications.

Features & Benefits

- 1000 lb. hold force rating for high security applications
- "Plus" models offer magnetic bond sensor (MBS), adjustable relock time delay (RTD) and door position switch (DPS)
- Automatic voltage selection (AVS)
- Symmetrical design with field-selectable handing for optimum placement
- Bayonet mount simplifies installation by eliminating the need to hold lock overhead while securing
- Armature mount pivot feature compensates for slight opening imperfections
- Optional mounting kits available for top jamb mount, double door and HERCULITE® brand glass doors
- Aluminum housing in 628 satin finish
- ANSI/BHMA 156.23 Grade 1, UL 1034, UL 10C, UL 294, cUL, CFSM certifications
- Limited lifetime warranty on magnetic coil assembly

Additional Features

All Models

- Automatic Voltage Selection (AVS) senses the voltage applied to the lock and responds accordingly

M450P/M452P

- Magnetic Bond Sensor (MBS) monitors the strength of the bond between the lock and armature so you know the door is secure
- Door Position Switch (DPS) monitors whether the door is open or closed
- Relock Time Delay (RTD) provides a relock delay that is adjustable from 1 to 30 seconds

Optional accessories (P models only)

- ATS/LED Combines anti-tamper switch (ATS) with magnetic bond sensor in one kit
  - ATS provides an indication that the cover of the magnet is securely fastened to the lock and that the on board circuitry is secure
  - Magnetic bond sensor indicator (LED) provides visual indication of magnetic bond at the lock

Optional accessories (for all)

- Glass door bracket kit designed for use with HERCULITE® brand glass doors
- Top jamb (inswinging doors) kit
- Double door connector kit (converts two single magnetic locks to a double)

Filler plate

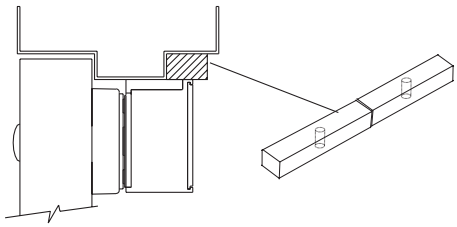

Angle bracket

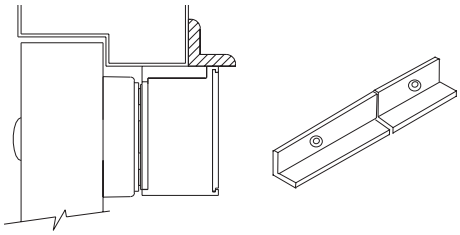

M450/M452 Electromagnetic Lock Specifications

Specification	M450/M450P	M452/M452P
Holding force	Meets or exceeds BHMA standard of 1000 lbs.	1000 lbs. per door leaf
Door type	Single	Double
Input voltage (auto selected)	12/24 VDC	12/24 VDC
Current draw	.75A @ 12 VDC .38A @ 24 VDC	1.5A @ 12 VDC .75A @ 24 VDC
Height	3"	3"
Length	10-1/4"	20-9/16"
Depth	1-3/4"	1-3/4"
Weight (approximate)	10 lbs.	20 lbs.
Certifications	UL 1034, UL 10C, UL 294, ANSI/BHMA156.23, cUL, CSFM	UL 1034, UL 10C, UL 294, ANSI/BHMA156.23, cUL, CSFM
Temperature	0° to 49°C (32° to 120° F)	0° to 49°C (32° to 120° F)
Wire gauge	14-22 AWG	14-22 AWG

Filler Plates and Angle Brackets Specifications

Filler Plates

Width x Height	Length	Plate No.
1-1/4" x 1/8"	10-1/4"	4501F
1-1/4" x 1/4"	10-1/4"	4502F
1-1/4" x 3/8"	10-1/4"	4503F
1-1/4" x 1/2"	10-1/4"	4504F
1-1/4" x 5/8"	10-1/4"	4505F
3/4" x 1/2"	10-1/4"	4506F
3/4" x 5/8"	10-1/4"	4507F
3/4" x 3/4"	10-1/4"	4508F

Angle Brackets

Width x Height	Length	Bracket No.
1" x 1"	10-1/4"	4501A
1-1/2" x 1"	10-1/4"	4502A
1-1/2" x 1-1/2"	10-1/4"	4503A
1-1/2" x 2"	10-1/4"	4504A
1-1/2" x 2-1/2"	10-1/4"	4505A

Allegion, the Allegion logo, Schlage, and the Schlage logo are trademarks of Allegion plc, its subsidiaries and/or affiliates in the United States and other countries. Herculite® is a registered trademark of Vitro, S.A.B. de C.V., and is not affiliated with Allegion or any of its subsidiaries.

© 2024 Allegion plc
004205, Rev. 01/24

M420/422

Electromagnetic Locks

Overview

M400 Series electromagnetic locks from Schlage are designed with the customer in mind to be robust, easy-to-install, and secure. The unique bayonet mounting feature makes installation easier, allowing the installer to have their hands free during the mounting process.

All M400 Series electromagnetic locks are symmetrical with field-selectable handing, allowing optimum placement of the magnet, no matter the application. They are designed to provide automatic voltage sensing for 12 and 24 volts along with polarity protection to make wiring less complex. M420 models are tested and certified to meet or exceed UL 1034 and BHMA 500 lb hold force requirements.

The M420 electromagnetic locks come in four configurations to meet your specific security needs. Single and double door models are offered in standard configurations. Plus versions of these models with "P" designations add intelligent sensing and reporting features needed to integrate with access control systems along with additional available options. Kits are available for top jam, double door, and glass door applications.

Features & Benefits

- 500 lb. hold force rating for traffic control applications
- "Plus" models offer magnetic bond sensor (MBS), adjustable relock time delay (RTD) and door position switch (DPS)
- Automatic voltage selection (AVS)
- Symmetrical design with field-selectable handing for optimum placement
- Bayonet mount simplifies installation by eliminating the need to hold lock overhead while securing
- Armature mount pivot feature compensates for slight opening imperfections
- Optional mounting kits available for top jamb mount, double door and HERCULITE® brand glass doors
- Aluminum housing in 628 satin finish
- ANSI/BHMA 156.23 Grade 1, UL 1034, UL 10C, UL 294, cUL, CFSM certifications
- Limited lifetime warranty on magnetic coil assembly

Additional Features

All Models

- Automatic Voltage Selection (AVS) senses the voltage applied to the lock and responds accordingly

M450P/M452P

- Magnetic Bond Sensor (MBS) monitors the strength of the bond between the lock and armature so you know the door is secure
- Door Position Switch (DPS) monitors whether the door is open or closed
- Relock Time Delay (RTD) provides a relock delay that is adjustable from 1 to 30 seconds

Optional accessories (P models only)

- ATS/LED Combines anti-tamper switch (ATS) with magnetic bond sensor in one kit
  - ATS provides an indication that the cover of the magnet is securely fastened to the lock and that the on board circuitry is secure
  - Magnetic bond sensor indicator (LED) provides visual indication of magnetic bond at the lock

Optional Accessories (For All)

- Glass door bracket kit designed for use with HERCULITE® brand glass doors
- Top jamb (inswinging doors) kit
- Double door connector kit (converts two single magnetic locks to a double)

Filler plate

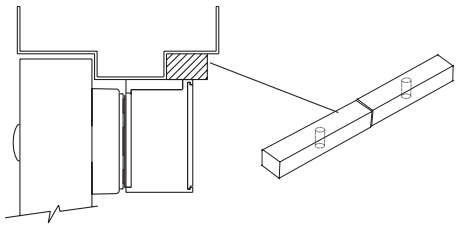

Angle bracket

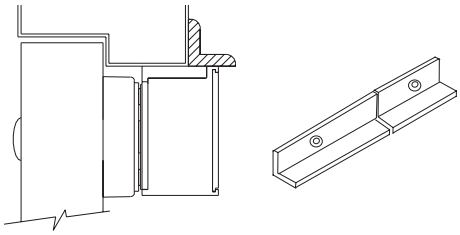

M420/M422 Electromagnetic Lock Specifications

Specification	M420/M420P	M422/M422P
Holding force	Meets or exceeds BHMA standard of 500 lbs.	Meets or exceeds BHMA standard of 500 lbs.
Door type	Single	Double
Input voltage (auto selected)	12/24 VDC	12/24 VDC
Current draw	.75A @ 12 VDC .38A @ 24 VDC	1.5A @ 12 VDC .76A @ 24 VDC
Height	2-1/2"	2-1/2"
Length	9"	18-1/16"
Depth	1-3/8"	1-3/8"
Weight (approximate)	6 lbs.	12 lbs.
Certifications	UL 1034, UL 10C, UL 294, ANSI/BHMA 156.23, cUL, CSFM	UL 1034, UL 10C, UL 294, ANSI/BHMA 156.23, cUL, CSFM
Temperature	0° to 49°C (32° to 120° F)	0° to 49°C (32° to 120° F)
Wire gauge	14-22 AWG	14-22 AWG

Filler Plates and Angle Brackets Specifications

Filler Plates

Width x Height	Length	Plate No.
1-1/4" x 1/8"	9"	4201F
1-1/4" x 1/4"	9"	4202F
1-1/4" x 3/8"	9"	4203F
1-1/4" x 1/2"	9"	4204F
1-1/4" x 5/8"	9"	4205F
3/4" x 1/2"	9"	4206F
3/4" x 5/8"	9"	4207F
3/4" x 3/4"	9"	4208F

Angle Brackets

Width x Height	Length	Bracket No.
1" x 1"	9"	4201A
1-1/2" x 1"	9"	4202A
1-1/2" x 1-1/2"	9"	4203A
1-1/2" x 2"	9"	4204A
1-1/2" x 2-1/2"	9"	4205A

Allegion, the Allegion logo, Schlage, and the Schlage logo are trademarks of Allegion plc, its subsidiaries and/or affiliates in the United States and other countries. Herculite® is a registered trademark of Vitro, S.A.B. de C.V., and is not affiliated with Allegion or any of its subsidiaries.

© 2024 Allegion plc
004206, Rev. 01/24

M490G

Electromagnetic Gate Lock

Overview

The Schlage M490G is a weather resistant electromagnetic gate lock with 1500 lbs of holding force designed for use on all types of sliding and swinging gates. As a high security magnetic lock, it can accommodate misalignment problems while supplying superior holding force.

A 1/2" compression connector is provided for installation of 1/2" EMT conduit, ensuring protection of hook-up wiring from weather and vandalism. Heavy-duty plating resists corrosion of mating surfaces, providing a low maintenance locking device.

A modified top jamb mounting bracket allows a single M490G to be mounted in a variety of positions. The M490G gate lock may be mounted to any gate frame or post. Special brackets may be required to adapt the lock to a particular frame or post. It is important that the lock is mounted so that the armature pulls straight back from the magnet face.

The M490G can be field configured for either 12 or 24 VDC operation. Magnetic Bond Sensor (MBS) and Gate Status Monitor (DPS) are standard.

Features & Benefits

- 1500 lb. hold force rating
- Magnetic bond sensor (MBS) and gate status monitor (DPS)
- Field selectable 12 or 24VDC operation
- Built-in voltage spike suppressor
- Electroless nickel plated finish
- Corrosion and weather resistant for exterior use
- Universal mounting brackets for swinging or sliding gate applications
- 1/2" EMT compression fitting protects hookup wires from weather and vandalism
- Two foot wire leads
- Accommodates gate misalignment
- No moving parts - low maintenance
- Limited lifetime warranty on magnetic coil assembly
- ANSI/BHMA 156.23 Outdoor rated

Additional Features

M490G

- **Magnetic Bond Sensor (MBS)** monitors the strength of the bond between the lock and armature so you know the door is secure
- **Door Position Switch (DPS)** monitors whether the door is open or closed
- Universal Mounting Brackets for swinging or sliding gate applications
- Built-in voltage spike suppression
- 1/2" EMT compression fitting
- Special corrosion resistant plating

M490G Electromagnetic Gate Lock Specifications

Specification	M490G
Holding force	Meets or exceeds BHMA standard of 1500 lbs.
Input voltage (auto selected)	12/24 VDC
Current draw (amps standard unit)	.65A @ 12 VDC .35A @ 24 VDC
Height	3"
Length	11"
Depth	1-3/4"
Weight (approximate)	14 lbs.
Certifications	ANSI/BHMA 156.23 Outdoor rated
Temperature	-31° to 151° F (-35° to 66° C)
Wire gauge	14-22 AWG

Filler Plates and Angle Brackets Specifications

Filler Plates

Width x Height	Length	Plate No.
1-1/4" x 1/8"	11"	49G1F
1-1/4" x 1/4"	11"	49G2F
1-1/4" x 3/8"	11"	49G3F
1-1/4" x 1/2"	11"	49G4F
1-1/4" x 5/8"	11"	49G5F
3/4" x 1/2"	11"	49G6F
3/4" x 5/8"	11"	49G7F
3/4" x 3/4"	11"	49G8F

Angle Brackets

Width x Height	Length	Bracket No.
1" x 1"	11"	49G1A
1-1/2" x 1"	11"	49G2A
1-1/2" x 1-1/2"	11"	49G3A
1-1/2" x 2"	11"	49G4A
1-1/2" x 2-1/2"	11"	49G5A

Allegion, the Allegion logo, Schlage, and the Schlage logo are trademarks of Allegion plc, its subsidiaries and/or affiliates in the United States and other countries. All other trademarks are the property of their respective owners.

© 2024 Allegion plc
004158, Rev. 01/24

M490DE

Delayed Egress Electromagnetic Lock

Overview

The Schlage M490DE delayed egress electromagnetic lock is designed to meet NFPA 101 Life Safety Code while providing the same robust, easy-to-install, security of our M400 Series magnetic locks. The M490DE has a 15-second delayed egress timer with audible alarm which can be configured to trigger by an internal "plunger switch," or by external contacts, such as a request-to-exit push bar.

All M400 Series electromagnetic locks are symmetrical with field-selectable handing, allowing optimum placement of the magnet no matter the application. They are designed to provide automatic voltage sensing for 12 and 24 volts along with polarity protection to make wiring less complex.

M490DE electromagnetic locks come in four configurations to meet your specific security needs. Single and double door models are offered in standard configurations. Plus versions of these models with "P" designations add intelligent sensing and reporting features needed to integrate with access control systems.

This easy-to-install, cost effective solution provides maximum access security and safety.

Features & Benefits

- 1300 lb. hold force rating for maximum security applications
- 15 second delay - activated by internal plunger switch or auxiliary input
- LED Indication with audible alerts
- Release input, reset input, fire alarm input
- Plus models offer magnetic bond sensor (MBS), adjustable relock time delay (RTD) and door position switch (DPS)
- Automatic voltage selection (AVS)
- Bayonet mount simplifies installation by eliminating the need to hold lock overhead while securing
- Armature pivot feature compensates for slight opening imperfections
- Aluminum housing in 628 satin finish
- ANSI/BHMA 156.24, UL special locking arrangements, UL 10C, cUL, CSFM, UL294 certifications
- Meets NFPA 101 life safety code
- BOCA compliant option available
- Limited lifetime warranty on magnetic coil assembly

Additional Features

All Models

- Auto Voltage Selection (AVS) senses the voltage applied to lock and responds accordingly
- Internal plunger switch activates delayed egress timer

Optional accessories

- Designed for use with HERCULITE® brand glass doors

M490DEP/M490DEP-2

- **Magnetic Bond Sensor (MBS)** monitors the strength of the bond between the lock and armature so you know the door is secure
- **Door Position Switch (DPS)** monitors whether the door is open or closed
- **BOCA compliant** (upon request) with options for 15- or 30-second time delay

Ordering Information

Standard Models

- **M490DE** - Single lock, 15-second delay
- **M490DE-2** - Double lock, separate housing, 15-second delay

Optional preset

- **M490DE-30S** - Single lock, factory set 30-second delay (requires fire marshal letter of approval)

Plus Models

- **M490DEP** - Single lock, 15-second delay
- **M490DEP-2** - Double lock, 15-second delay
- **M490DEP-BC** - BOCA compliant single lock, factory set 15-second delay with auto re-armed and locked state after door is opened and re-closes
- **M490DEP-BC30S** - BOCA compliant single lock, factory set 30-second delay with auto re-armed and locked state after door is opened and re-closes (requires fire marshal letter of approval)

M490DE Electromagnetic Delayed Egress Lock Specifications

Specification	M490DE/M490DEP	M490DE-2/M490DEP-2
Holding force	1300 lbs.	1300 lbs. per door leaf
Door type	Single	Double
Input voltage (auto selected)	12/24 VDC	12/24 VDC
Current draw	.75A @ 12 VDC .45A @ 24 VDC	1.25A @ 12 VDC .76A @ 24 VDC
Height	3"	3"
Length	12-1/2"	25-1/16"
Depth	3-1/16"	3-1/16"
Weight (approximate)	16 lbs.	32 lbs.
Certifications	ANSI/BHMA 156.24, UL special locking arrangement, UL10C, cUL, CSFM, UL294	
Temperature	0° to 49°C (32° to 120° F)	0° to 49°C (32° to 120° F)
Wire gauge	14-22 AWG	14-22 AWG

Filler Plates and Angle Brackets Specifications

Filler Plates

Width x Height	Length	Plate No.
1-1/4" x 1/8"	12-1/2"	4901F
1-1/4" x 1/4"	12-1/2"	4902F
1-1/4" x 3/8"	12-1/2"	4903F
1-1/4" x 1/2"	12-1/2"	4904F
1-1/4" x 5/8"	12-1/2"	4905F
3/4" x 1/2"	12-1/2"	4906F
3/4" x 5/8"	12-1/2"	4907F
3/4" x 3/4"	12-1/2"	4908F

Angle Brackets

Width x Height	Length	Bracket No.
1" x 1"	12-1/2"	4901A
1-1/2" x 1"	12-1/2"	4902A
1-1/2" x 1-1/2"	12-1/2"	4903A
1-1/2" x 2"	12-1/2"	4904A
1-1/2" x 2-1/2"	12-1/2"	4905A

Allegion, the Allegion logo, Schlage, and the Schlage logo are trademarks of Allegion plc, its subsidiaries and/or affiliates in the United States and other countries. Herculite® is a registered trademark of Vitro, S.A.B. de C.V., and is not affiliated with Allegion or any of its subsidiaries.

© 2024 Allegion plc
004762, Rev. 01/24

GF3000

Mortise Mounted Shear Lock

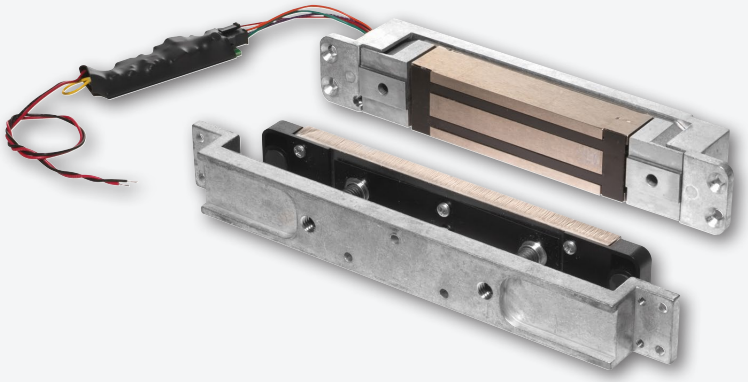

Overview

GF3000 Series shear locks feature a patented design, offering advances over any shear lock in the market.

A microprocessor-based control module provides advanced electronic features. This circuitry automatically senses and adjusts input voltage, allowing for operation from 12 to 24 volt DC power sources.

These mortise shear locks offer the advantage of a totally concealed locking mechanism, providing superior security and appearance while allowing for normal door movement. The patented design incorporates locking "tabs" on the magnet assembly with mating grooves in the armature plate.

The GF3000 Series locks are ideally suited for commercial grade quality hollow metal doors and frames, and are designed to be compatible with HERCULITE® brand glass doors with top rail. Advances in design provide low operating temperatures, making these shear lock suitable for use in the growing demand for concealed locks in wood frames.

The GF3000TRD model is available when armature adjustment is required from the edge of the door due to flush ceiling conditions. The GF3000BRD model is available when no top rail mounting is available.

Features & Benefits

- 3000 lb. hold force rating
- Fully concealed shear lock mortise design
- Automatic voltage selection (AVS) 12/24 VDC (filtered and regulated)
- Built-in automatic relock switch
- Adjustable time delay on relock, 2-30 seconds
- Low temperature operation
- Microprocessor controlled
- Optional Magnetic Bond Sensor (MBS) and Door Status Monitor (DSM) to monitor the secure/not secure condition of the lock and to sense the open/closed position of the door
- ANSI/BHMA 156.23, UL 10C, cUL, and CSFM certifications
- Limited lifetime warranty on magnetic coil

GF3000 Mortise Mounted Shear Lock Specifications			
Specification	**GF3000**	**GF3000TRD**	**GF3000BRD**
Holding force	3000 lbs.	3000 lbs.	3000 lbs.
Input voltage*	12/24 VDC	12/24 VDC	12/24 VDC
Current draw	.90A @ 12 VDC .45A @ 24 VDC	.90A @ 12 VDC .45A @ 24 VDC	.90A @ 12 VDC .45A @ 24 VDC
Lock body dimensions (L x H x D)	9-1/2" x 1-1/2" x 1-1/2"	9-1/2" x 1-1/2" x 1-1/2"	N/A
Lock body with mounting tabs	11-9/16" x 1-1/2" x 1-1/2"	11-9/16" x 1-1/2" x 1-1/2"	7-1/16" x 1-1/2" x 1-3/16"
Threshold box	N/A	N/A	7-1/2" x 2-1/4" x 1-3/4"
Armature	8-3/8" x 1-3/8" x 1/2"	8-3/8" x 1-3/8" x 1/2"	6-1/8" x 1-3/8 " x 7/16"
Armature bracket	10-5/8" x 1-3/8" x 1"	6-1/4" x 1-3/8" x 1-1/4"	6-1/4" x 1-3/8" x 1-1/4"
Weight	7 lbs.	6 lbs.	6 lbs.
Certifications	UL 10C, cUL, CSFM, ANSI/BHMA 156.23	UL 10C, cUL, CSFM ANSI/BHMA 156.23	UL 10C, cUL, CSFM, ANSI/BHMA 156.23

*Requires filtered, regulated power supply.

Ordering Information

- **GF3000 (Standard Model):** Fully concealed shear lock. The armature mounts into top of door or top rail and magnet mounts into header or frame. Air gap adjustment is from top edge of door.
- **GF3000TRD (Top Rail Door):** Fully concealed shear lock intended for use when top of door is not accessible for air gap adjustment after door is hung. Armature mounts into top of door or top rail and magnet mounts into header or frame. Air gap adjustment is from latch edge of door
- **GF3000BRD (Bottom Rail Door):** Fully concealed shear lock intended for use when top of door is not accessible for air gap adjustment after door is hung. Armature mounts into bottom of door or bottom rail and magnet mounts into floor. Air gap adjustment is from edge of armature. Popular application compatible with HERCULITE® brand glass doors.

Options

- **DSM/MBS** - Door Status Monitor/Magnetic Bond Sensor

Allegion, the Allegion logo, Schlage, and the Schlage logo are trademarks of Allegion plc, its subsidiaries and/or affiliates in the United States and other countries. Herculite® is a registered trademark of Vitro, S.A.B. de C.V., and is not affiliated with Allegion or any of its subsidiaries.

© 2024 Allegion plc
004160, Rev. 01/24

GF3000

Surface Mounted Shear Lock

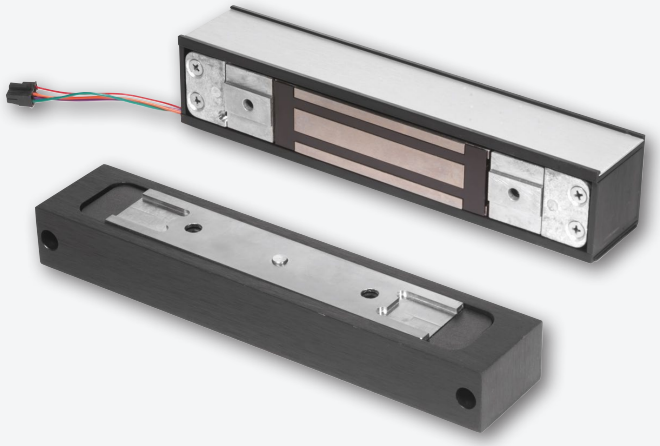

Overview

GF3000 Series shear locks' patented design provides powerful holding force in low profile models for inswinging and outswinging doors. A microprocessor-based control module provides advanced electronic features. This circuitry automatically senses and adjusts input voltage, allowing for operation from 12 to 24 volt DC power sources.

The lightweight, black anodized housing can be quickly mounted without need of brackets and is finished off with a satin aluminum decorative plate for a clean look.

Features & Benefits

- 3000 lb. hold force rating
- Automatic voltage selection (AVS) 12/24 VDC (filtered and regulated)
- Built-in automatic relock switch
- Adjustable time delay on relock, 2-30 seconds
- Low temperature operation
- Microprocessor controlled
- Optional Magnetic Bond Sensor (MBS) and Door Status Monitor (DSM) to monitor the secure/not secure condition of the lock and to sense the open/closed position of the door
- Housing is black anodized with BHMA 628 satin aluminum decorative plate
- ANSI/BHMA 156.23, UL 10C, cUL, and CSFM certifications
- Limited lifetime warranty on magnetic coil assembly

GF3000 Surface Mounted Shear Lock Specifications		
Specification	**GF3000SM**	**GF3000TJ**
Holding force	3000 lbs.	3000 lbs.
Door type	Outswinging	Inswinging
Current draw	.90A @ 12 VDC .45A @ 24 VDC	.90A @ 12 VDC .45A @ 24 VDC
Lock housing (L x H x D)	9-13/16" x 1-1/4" x 1-1/2"	9-13/16" x 1-1/4" x 1-1/2"
Armature housing (L x H x D)	8-3/8" x 1-3/8" x 1/2"	8-3/8" x 1-3/8" x 1/2"
Weight	9 lbs.	9 lbs.
Certifications	UL 10C, cUL, CSFM, ANSI/BHMA 156.23	UL 10C, cUL, CSFM, ANSI/BHMA 156.23

Ordering Information

- **GF3000SM (Surface Mounted):** Surface mounted shear lock intended for use on outswinging doors. Surface mounted magnet mounts under header and surface mounted armature assembly mounts into door just under magnet assembly. Air gap adjustment is from top of door
- **GF3000TJ (Top Jamb):** Surface mounted shear lock intended for use on inswinging doors that are flush with frame's inner face. Surface mounted armature assembly mounts onto top of door or top rail and surface mounted magnet mounts onto frame's face. Air gap adjustment is from top of door.

Options

- **DSM/MBS** - Door Status Monitor/Magnetic Bond Sensor

Allegion, the Allegion logo, Schlage, and the Schlage logo are trademarks of Allegion plc, its subsidiaries and/or affiliates in the United States and other countries. All other trademarks are the property of their respective owners.

© 2024 Allegion plc
004159, Rev. 01/24

320M

Mortise Mount Sliding Door Electromagnetic Lock

Overview

Schlage provides the industry's most complete selection of electromagnetic locks. The 320M MiniLine™ is a UL listed, for mortise mounted electromagnetic lock designed for use on sliding doors. It interfaces with electronic access control systems, automatic door operators, and fire or hazard sensing systems to provide egress upon detectable emergency. With a fail-safe design, it offers an excellent solution for both security and life safety requirements when connected to the fire alarm circuit.

The 320M has been installed in thousands of locations worldwide including airports, hospitals, nursing homes, schools, universities, libraries, museums, retail and office buildings, laboratories, and government buildings.

Features & Benefits

- 550 lb. hold force rating with 24 VDC
- Compact, mortise mount design for sliding doors
- Includes mounting tabs and armature mounting block
- Low maintenance - no moving parts
- Meets security and life safety requirements
- Field selectable 12 or 24 VDC operation
- Standard features include adjustable time delay (ATD), door status monitor (DSM), and magnetic bond sensor (MBS)
- cUL and CSFM certified
- UL 10C listed for positive pressure fire tests of door assemblies: 3 hours
- Limited lifetime warranty on magnetic coil assembly

320M Mortise Mounted Sliding Door Electromagnetic Lock Specifications	
Specification	**320M**
Holding force	400 lbs. @ 12 VDC, 550 lbs @ 24 VDC
Input voltage	12/24 VDC
Current draw (Dual Voltage Field Selectable)	.23A @ 12 VDC .45A @ 24 VDC
Wiring	Wire leads 12" long
Lock body (L x H x D)	7" x 1-3/8" x 1-7/8"
Armature (L x H x D)	4-1/4" x 1-1/2" x 5/8"
Weight	6 lbs.

Note for wood frames: Due to higher ambient operating temperatures, it is required that the 12 VDC configuration be used.

Allegion, the Allegion logo, Schlage and the Schlage logo are trademarks of Allegion plc, its subsidiaries and/or affiliates in the United States and other countries. All other trademarks are the property of their respective owners.

© 2024 Allegion plc
004157, Rev. 01/24

M390RFK

Retrofit Electromagnetic Lock

Overview

The M390RFK is designed to retrofit the Locknetics 390+ without any additional prep. This ensures ease of installation for retrofit applications. The M390RFK comes standard with a Door Status Monitor (DSM), Magnetic Bond Sensor (MBS), and Relocking Time Delay (RTD). It's design employs a standardized circuit board with easy-to-install connectors, adjustable mounting brackets and integrated mounting screws. The armature housing was designed to eliminate noise and sagging, increasing the overall reliability of the product. The armature housing also holds magnets for the DSM feature without having to mount an additional plate to the armature, ensuring quicker, more reliable installations.

The M390RFK easily interfaces with most electronic access control systems in the market today, as well as automatic door operators and fire, or other hazard sensing systems for egress and emergency egress.

Features & Benefits

- Direct retrofit for Locknetics 390+ electromagnetic lock for outswinging doors
- Single lock model has 1500 lbs. of holding force for maximum security applications
- Automatic voltage selection (AVS)
- Adjustable mounting brackets
- Standard features include door status monitor (DSM), magnetic bond sensor with LED indicator (MBS) and a relocking time delay (RTD) of 0-110 seconds
- UL 10C listed for positive pressure fire tests of door assemblies: 3 hours
- ANSI/BHMA 156.23 Grade 1, cUL certified
- Limited lifetime warranty on magnetic coil assembly

M390RFK Retrofit Electromagnetic Lock Specifications	
Specification	**M390RFK**
Holding force	1500 lbs.
Door type	Single outswinging only
Input voltage (standard unit)	12/24 VDC
Current draw (amps standard unit)	.65A @ 12 VDC .45A @ 24 VDC
Height	2-7/8"
Length	10-1/2"
Depth	1-5/8"
Weight (approximate)	12.4 lbs.
Certifications	ANSI/BHMA 156.23, UL 10C, cUL
Temperature	0° to 49° C (32° to 120° F)

Allegion, the Allegion logo, Schlage and the Schlage logo are trademarks of Allegion plc, its subsidiaries and/or affiliates in the United States and other countries. All other trademarks are the property of their respective owners.

© 2024 Allegion plc
009007, Rev. 01/24

PS906

6 amp Power Supply

Photo as shown includes optional board(s). Please contact your local sales office or visit the support section on our website for configuration assistance.

Overview

The Schlage comprehensive line of power supplies and option boards was designed to address the changing needs of the access control market.

Installation is simplified by utilizing a flat mounting design and polarized locking connectors for option boards. This design eliminates the need for racks and side connectors. The flat mounting of the option boards also provides for easier access to the terminal blocks for connection of electrified devices (such as electrified strikes, electromagnetic locks, card readers, etc.).

Common to the line of PS900 Series power supplies is a constant output rating at both 12v and 24v settings, universal 120 VAC to 240 VAC input, and polarized option board connectors. New fire alarm interface board mounting allows outputs to be configured as switched (power cut) or unswitched (power continues) when signal is provided.

Configuration Options

Available option board, fire alarm and battery backup connection locations:

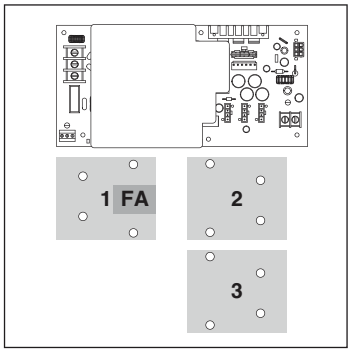

PS906 without battery backup

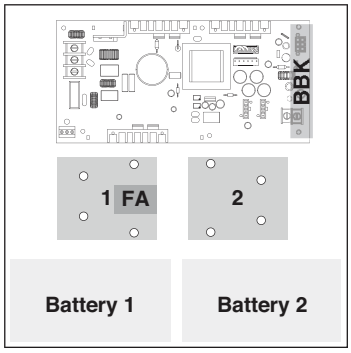

PS906 with battery backup

Features & Benefits

- 6A @ 12/24 VDC constant output, field selectable with jumper
- Provides low-voltage, Class 1, filtered and regulated power (Class 2 when used with 900-8P option board)
- Universal 120-240 VAC, fused primary input
- Three polarized option board connectors eliminate need for racks and side connectors
- AC input and DC output monitoring circuit with LED indicators
- Externally visible AC input indicator with isolated SPDT contacts
- High-voltage protective cover for AC circuitry (not shown)
- Battery back-up board auto-selects voltage
- Optional Fire Alarm plug-in board available
- UL 294, ULC-S318, RoHS, and FCC Part 15 certified

PS906 Power Supply Specifications	
Specification	**Description**
Input voltage	120/240 VAC, 50/60 Hz, universal input
Output voltage	6A @ 12 or 24 VDC Field selectable with jumper Switching supply, 5% regulation, 240mVpp max ripple
Enclosure	Grey/baked enamel 14"x 12"x 4" (H x W x D) Eight 1/2" x 3/4" knockouts NEMA Grade 1 Hinged cover with lock down screws
Operating temperature	32° - 120°F (0° - 49°C)
Certifications	ANSI/UL 294 ULC-S318 RoHS FCC Part 15 Class 1 (Class 2 when used with 900-8P option board)
Battery backup (install on main board)	900-BB: Battery backup board only 900-BBK: Battery backup kit (backup board plus battery pack)
Available option boards	900-FA: Plug-in fire alarm (must be installed on option board) 900-2RS*: 2 Relay option board capable of individual or sequential operation for single and pair door applications 900-4R*: 4 Relay option board 900-4RL*: 4 Relay option board with integrated logic and individual or sequential operation capability for controlling security interlocks, auto operators and time delay function 900-8F*: Fused, 8 zone option board 900-8P*: PTC, 8 zone option board
AC primary fuse size	6.3A, 250v, 5 x 20 mm
Battery fuse size	7.5A 32v ATO blade style
DC output protection	Overload protection - current limited foldback circuit
Indicators	LED indicators: - AC input (visible on outside of enclosure) - DC output Isolated SPDT contacts to monitor AC power status
Weight (power supply)	Approx. 9.0 lbs
Weight (each battery)	4.0 lbs
AC input termination	3 position terminal block with protective cover Wire capacity: 10 AWG max.
DC output termination	2 position terminal block Wire capacity: 12 AWG max.
Option board connectors	3
Fire alarm board connector	Yes (requires connection on option board)
Keylock	Optional
Accessories	900-BAT: Backup battery pack

* Compatible with plug-in fire alarm board (900-FA)

Exit Device Support	
Von Duprin QEL	Up to 8[1]
Von Duprin EL	None
Falcon EL	None

1. Requires the use of two 900-4RL option boards

© 2024 Allegion plc
004193, Rev. 01/24

PS904

4 amp Power Supply

Photo as shown includes optional board(s). Please contact your local sales office or visit the support section on our website for configuration assistance.

Overview

The Schlage comprehensive line of power supplies and option boards was designed to address the changing needs of the access control market.

Installation is simplified by utilizing a flat mounting design and polarized locking connectors for option boards. This design eliminates the need for racks and side connectors. The flat mounting of the option boards also provides for easier access to the terminal blocks for connection of electrified devices (such as electrified strikes, electromagnetic locks, card readers, etc.).

Common to the line of PS900 Series power supplies is a constant output rating at both 12v and 24v settings, universal 120 VAC to 240 VAC input, and polarized option board connectors. New fire alarm interface board mounting allows outputs to be configured as switched (power cut) or unswitched (power continues) when signal is provided.

Features & Benefits

- 4A @ 12/24 VDC constant output, field selectable with jumper
- Provides low-voltage, Class 2, filtered and regulated power
- Universal 120-240 VAC, fused primary input
- Two polarized option board connectors eliminate need for racks and side connectors
- AC input and DC output monitoring circuit with LED indicators
- Externally visible AC input indicator with isolated SPDT contacts
- High-voltage protective cover for AC circuitry (not shown)
- Battery back-up board auto-selects voltage
- Optional Fire Alarm plug-in board available
- UL 294, ULC-S318, RoHS, and FCC Part 15 certified

Configuration Options

Available option board, fire alarm and battery backup connection locations:

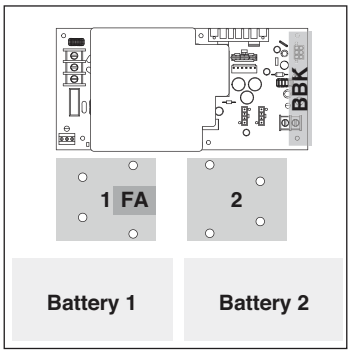

PS904 Power Supply Specifications	
Specification	**Description**
Input voltage	120/240 VAC, 50/60 Hz, universal input
Output voltage	4A @ 12 or 24 VDC Field selectable with jumper Switching supply, 5% regulation, 240mVpp max ripple
Enclosure	Grey/baked enamel 14" x 12" x 4" (H x W x D) Eight 1/2" x 3/4" knockouts NEMA Grade 1 Hinged cover with lock down screws
Operating temperature	32° - 120°F (0° - 49°C)
Certifications	ANSI/UL 294 ULC-S318 RoHS FCC Part 15 Class 2
Battery backup (install on main board)	900-BB: Battery backup board only 900-BBK: Battery backup kit (backup board plus battery pack)
Available option boards	900-FA: Plug-in fire alarm (must be installed on option boards) 900-2RS*: 2 Relay option board capable of individual or sequential operation for single and pair door applications 900-4R*: 4 Relay option board 900-4RL*: 4 Relay option board with integrated logic and individual or sequential operation capability for controlling security interlocks, auto operators and time delay function 900-8F*: Fused, 8 zone option board 900-8P*: PTC, 8 zone option board
AC primary fuse size	4A, 250v, 5 x 20mm
Battery fuse size	7.5A 32v ATO blade style
DC output protection	Overload protection - current limited foldback circuit
Indicators	LED indicators: - AC input (visible on outside of enclosure) - DC output Isolated SPDT contacts to monitor AC power status
Weight (power supply)	Approx. 9.0 lbs
Weight (each battery)	4.0 lbs
AC input termination	3 position terminal block with protective cover Wire capacity: 10 AWG max.
DC output termination	2 position terminal block Wire capacity: 12 AWG max.
Option board connectors	2
Fire alarm board connector	Yes (requires connection on option board)
Keylock	Optional
Accessories	900-BAT: Backup battery pack

© 2024 Allegion plc
004194, Rev. 01/24

PS902

2 amp Power Supply

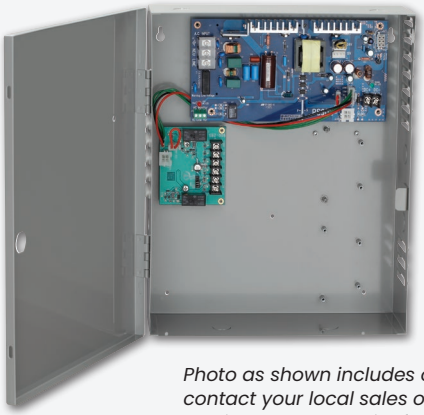

Photo as shown includes optional board(s). Please contact your local sales office or visit the support section on our website for configuration assistance.

Overview

The Schlage comprehensive line of power supplies and option boards was designed to address the changing needs of the access control market.

Installation is simplified by utilizing a flat mounting design and polarized locking connectors for option boards. This design eliminates the need for racks and side connectors. The flat mounting of the option boards also provides for easier access to the terminal blocks for connection of electrified devices (such as electrified strikes, electromagnetic locks, card readers, etc.).

Common to the line of PS900 Series power supplies is a constant output rating at both 12v and 24v settings, universal 120 VAC to 240 VAC input, and polarized option board connectors. New fire alarm interface board mounting allows outputs to be configured as switched (power cut) or unswitched (power continues) when signal is provided.

Features & Benefits

- 2A @ 12/24 VDC constant output, field selectable with jumper
- Provides low-voltage, Class 2, filtered and regulated power
- Universal 120-240 VAC, fused primary input
- Single polarized option board connector
- AC input and DC output monitoring circuit with LED indicators
- Externally visible AC input indicator with isolated SPDT contacts
- High-voltage protective cover for AC circuitry (not shown)
- Battery back-up board auto-selects voltage
- Optional Fire Alarm plug-in board available
- UL 294, ULC-S318, RoHS, and FCC Part 15 certified

Configuration Options

Available option board, fire alarm and battery backup connection locations:

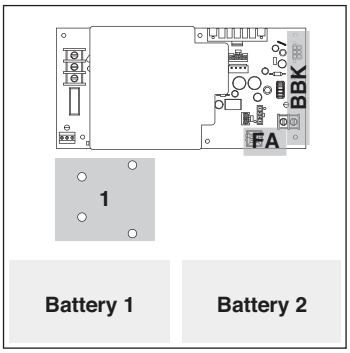

Exit Device Support	
Von Duprin QEL	Up to 2[1]
Von Duprin EL	None
Falcon EL	None

1. Requires the use of one 900-2RS option board

PS902 Power Supply Specifications	
Specification	**Description**
Input voltage	120/240 VAC, 50/60 Hz, universal input
Output voltage	2A @ 12 or 24 VDC Field selectable with jumper Switching supply, 5% regulation, 240mVpp max ripple
Enclosure	Grey/baked enamel 14" x 12" x 4" (H x W x D) Eight 1/2" x 3/4" knockouts NEMA Grade 1 Hinged cover with lock down screws
Operating temperature	32°–120°F (0°–49°C)
Certifications	ANSI/UL 294 ULC-S318 RoHS FCC Part 15 Class 2
Battery backup (install on main board)	900-BB: Battery backup board only 900-BBK: Battery backup kit (backup board plus battery pack)
Available option boards	900-FA: Plug-in fire alarm (install on main or option board) 900-2RS: 2 Relay option board capable of individual or sequential operation for single and pair door applications 900-4R: 4 Relay option board 900-4RL: 4 Relay option board with integrated logic and individual or sequential operation capability for controlling security interlocks, auto operators, and time delay function 900-8F: Fused, 8 zone option board 900-8P: PTC, 8 zone option board
AC primary fuse size	3.15A, 250v, 5 x 20mm
Battery fuse size	7.5A 32v ATO blade style
DC output protection	Overload protection—current limited foldback circuit
Indicators	LED indicators: - AC input (visible on outside of enclosure) - DC output Isolated SPDT contacts to monitor AC power status
Weight (power supply)	Approx. 9.0 lbs
Weight (each battery)	4.0 lbs
AC input termination	3 position terminal block with protective cover Wire capacity: 10 AWG max.
DC output termination	2 position terminal block Wire capacity: 12 AWG max.
Option board connectors	1
Fire alarm board connector	Yes
Keylock	Optional
Accessories	900-BAT: Backup battery pack

© 2024 Allegion plc
004195, Rev. 01/24

VON DUPRIN®

PS914

4 amp High In Rush Power Supply

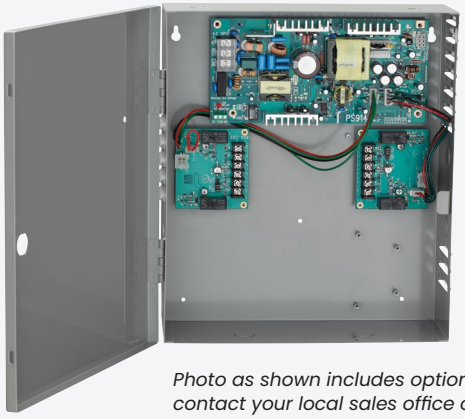

Photo as shown includes optional board(s). Please contact your local sales office or visit the support section on our website for configuration assistance.

Overview

Von Duprin power supply and option board products were designed to meet the specific requirements of electrified fire exit devices.

Installation is simplified by utilizing a flat mounting design and polarized locking connectors for option boards. This design eliminates the need for racks and side connectors. The flat mounting of the option boards also provides for easier access to the terminal blocks for connection of electrified devices (such as electrified panic devices, strikes, card readers, etc.).

Common to the line of PS900 Series power supplies is a constant output rating at both 12v and 24v settings, universal 120 VAC to 240 VAC input, and polarized option board connectors. New fire alarm interface board mounting allows outputs to be configured as switched (power cut) or unswitched (power continues) when signal is provided.

Features & Benefits

- 4A @ 12/24 VDC constant output, field selectable with jumper
- Designed for use with electrified panic devices requiring high in rush current
- Provides low-voltage, Class 2, filtered and regulated power
- Universal 120-240 VAC, fused primary input
- Two polarized option board connectors
- AC input and DC output monitoring circuit with LED indicators
- Externally visible AC input indicator with isolated SPDT contacts
- High-voltage protective cover for AC circuitry (not shown)
- Battery back-up board auto-selects voltage
- Optional Fire Alarm plug-in board available
- UL 294, ULC-S318, RoHS, and FCC Part 15 certified

Configuration Options

Available option board, fire alarm and battery backup connection locations:

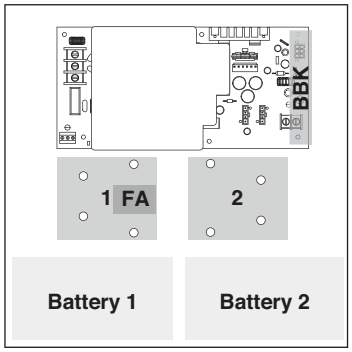

Exit Device Support	
Von Duprin QEL	Up to 8[1]
Von Duprin EL	Up to 8[1,2]
Falcon EL	Up to 8[1,2]

1. Requires the use of two 900-4RL option boards
2. Distance from power supply may be limited with multiple EL applications - consult technical support for wire run lengths

PS914 Power Supply Specifications	
Specification	Description
Input voltage	120/240 VAC, 50/60 Hz, universal input
Output voltage	4A @ 12 or 24 VDC Field selectable with jumper Switching supply, 5% regulation, 360mVpp max ripple
Enclosure	Grey/baked enamel 14" x 12" x 4" (H x W x D) Eight 1/2" x 3/4" knockouts Hinged cover with lock down screws
Operating temperature	32° - 120°F (0° - 49°C)
Certifications	ANSI/UL 294 ULC-S318 RoHS FCC Part 15 Class 2
Battery backup (install on main board)	900-BB: Battery backup board only 900-BBK: Battery backup kit (backup board plus battery pack)
Available option boards	900-FA: Plug-in fire alarm (must be installed on option board) 900-2RS*: 2 Relay option board capable of individual or sequential operation for single and pair door applications 900-4R*: 4 Relay option board 900-4RL*: 4 Relay option board with integrated logic and individual or sequential operation capability for controlling security interlocks, auto operators and time delay function 900-8F*: Fused, 8 zone option board 900-8P*: PTC, 8 zone option board
AC primary fuse size	6.3A, 250v, 5 x 20mm
Battery fuse size	7.5A 32v ATO blade style
DC output protection	Overload protection - current limited foldback circuit
Indicators	LED indicators: - AC input (visible on outside of enclosure) - DC output Isolated SPDT contacts to monitor AC power status
Weight (power supply)	Approx. 9.0 lbs
Weight (each battery)	4.0 lbs
AC input termination	3 position terminal block with protective cover Wire capacity: 10 AWG max.
DC output termination	2 position terminal block Wire capacity: 12 AWG max.
Option board connectors	2
Fire alarm board connector	Yes (requires connection on option board)
Keylock	Optional
Accessories	900-BAT: Backup battery pack

* Compatible with plug-in fire alarm board (900-FA)

© 2024 Allegion plc
004101, Rev. 01/24

620/631 Series

Heavy-Duty Pushbuttons

Overview

Schlage® pushbuttons are used to control the ingress and/or egress of a door. The 620 and 631 Series pushbuttons are easy to install and operate. Their standard and narrow stile plates offer ultimate flexibility. The 620 Series have multiple button configuration and finish options provide enhanced architectural appeal.

Schlage 620 Series pushbuttons also offer significant installer-friendly innovations such as screw terminal connections for the momentary action models and easy-to-install L2/ILL optional PC board. The 621/623 models offer glow-in-the-dark button options as well as backlit illumination for the cone with green, yellow and red LEDs. Additional options include maintained or delayed action, double pole double throw switches, narrow stile faceplates and heavy-duty faceplates with several architectural finishes.

Features & Benefits

- 620 Series offered in 5 button colors
- "PUSH TO EXIT" message and handicap symbol choices provide obvious action indication
- Glow-in-the-dark buttons and illuminated cone options on 621 and 623 models
- Momentary action is standard; factory orderable with delayed (0-60 second) or alternate action
- Double pole, double throw optional (not available with delayed action)
- Standard, heavy-duty single gang faceplate or narrow stile option
- 1-1/4" inset, 1-5/8" mushroom and 2-3/4" large mushroom buttons
- 630 Satin Stainless Steel standard plus three other finish options
- Extreme duty 631 models are cast zinc with 626 Satin Chrome finish only
- UL 294 Listed

Ordering Information

621 - GID - DA - SF-626

Model	Button	Options	Finish
1	2	3	4

1 Model	
621	1-1/4" Button, single gang
623	1-5/8" Mushroom button, single gang
625	2-3/4" Mushroom button, single gang
631	1-1/4" Metal button, single gang

2 Button	
GID-EX	Glow-in-the-dark "PUSH TO EXIT"
GID	Glow-in-the-dark
RD-EX	Red, "PUSH TO EXIT"
RD	Red
GR-EX	Green, "PUSH TO EXIT"
GR	Green
BL-H	Blue, handicapped symbol
BK	Black
AL-EX-RD	Aluminum button red coated, engraved "PUSH TO EXIT"
AL-EX	Aluminum button, engraved "PUSH TO EXIT"
AL	Aluminum button

3 Options	
DA	Delayed action (0-60 seconds)
AA	Alternate action - maintained
DP	Double pole double throw (not available with DA option)
L2/ILL	3 LEDs - green/yellow/red concealed within opaque cone (only available for the 621 and 623 models)
NS	Narrow stile faceplate (1-3/4" x 4-1/2")

4 Finish	
630	Satin Stainless Steel (standard) on .035 steel
SF-626	Satin Chrome (standard on 631 models)
SF-613	Oil Satin Bronze
SF-625	Bright Chrome

Note: Non-standard finishes on heavy-duty plate (HDP) 1/4" thick cast zinc

Button Configurations

	GID-EX	GID-H	GID	RD-EX	RD	GR-EX	GR	BL-H	BK
621	PUSH TO EXIT	–		PUSH TO EXIT		PUSH TO EX IT			
623	PUSH TO EXIT	–		PUSH TO EXIT		PUSH TO EXIT			
625	–	–	–			PUSH TO EXIT			

	AL-EX	AL	AL-RD-EX						
621	PUSH TO EXIT		PUSH TO EXIT						

	AL-EX	AL	AL-RD-EX						
631	PUSH TO EXIT		PUSH TO EXIT						

Multiple Button Configurations

***621** - 1-1/4" Button*

***623** - 1-5/8" Mushroom button*

***625** - 2-3/4" Mushroom button*

***631** - Extreme-duty 1-1/4" Metal button*

Optional Finishes

SF-613
Oil Rubbed
Bronze

SF-625
Bright Chrome

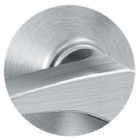

SF-626
Satin Chrome
(standard on
631 models)

Note: Optional finishes not available on 631 models.

Allegion, the Allegion logo, Schlage and the Schlage logo are trademarks of Allegion plc, its subsidiaries and/or affiliates in the United States and other countries. All other trademarks are the property of their respective owners.

© 2024 Allegion plc
003910, Rev. 05/24

700 Series

Pushbuttons

Overview

Schlage pushbuttons are used to control the egress of a door. The 700 Series pushbuttons are easy to install, entry level pushbuttons that are designed to meet commercial applications. Use with indoor swinging or sliding doors that are electrically or electronically locked. 700 Series entry level pushbuttons are available for single gang and narrow stile applications. The 709 model includes backlit buttons with "PUSH TO EXIT" or handicap symbol to meet ADA requirements for the ingress or egress of a door.

Features & Benefits

- Illuminated 2" square large button options or 5/8" and 7/8" round button options
- Optional dual LED status indicators in green and red
- For indoor use
- Momentary switch standard or factory orderable with maintained (alternate action) switch
- Handicapped symbol option
- Single gang or narrow style faceplate cover options
- Satin stainless steel finish
- UL 294 Listed

700 Series Pushbutton Specifications		
Specification	**701**	**709**
Contact ratings	3A @ 30VAC/VDC, momentary SPDT contacts	5A @ 30VAC/VDC, momentary SPDT contacts
Wire leads	20 awg – 6" long	20 awg – 8" long
Input requirements with LED option		
Voltage	12/24 VDC	12/24 VDC
Current draw	30 mA	30 mA
Wire leads	24 awg – 6" long	24 awg – 6" long
Input requirements with ILL option		
Voltage	24 VDC	12/24 VDC

Ordering Information

- **701RD** - 7/8" Red mushroom button
- **701BK** - 7/8" Black mushroom button
- **701RD EX** - 5/8" Red button - engraved "PUSH TO EXIT"
- **701RD EX ILL** - 5/8" Red button – illuminated "PUSH TO EXIT"
- **709RD EX ILL** - 2" Red square - illuminated "PUSH TO EXIT"
- **709GR EX ILL** - 2" Green square – illuminated "PUSH TO EXIT"
- **709BLH ILL** - 2" Blue square – illuminated handicapped symbol

Options

- **L2** - Two LEDs, red and green, dual voltage for status indication
- **AA** - Alternate action – maintained (701 Series only)
- **NS** - Narrow stile plate (701 Series only)

Allegion, the Allegion logo, Schlage and the Schlage logo are trademarks of Allegion plc, its subsidiaries and/or affiliates in the United States and other countries. All other trademarks are the property of their respective owners.

© 2024 Allegion plc
003911, Rev. 01/24

740 Series

Emergency Break Glass Releases

Overview

Schlage 740 Series emergency break glass releases are designed for use as emergency releases of non-designated egress doors such as in individual and partitioned laboratories, secluded testing areas or other isolated work rooms that are purposely provided with exit doors. In perimeter protection systems that involve the central control of electric locking devices, an on-site emergency release may be required. The “break glass” concept may be preferred over the pull station, because it is less vulnerable to misuse or tamper actuation.

The 740 Series emergency break glass units consist of a replacement break glass cartridge that normally holds the plunger-activated switch depressed until the cartridge lens is broken. When the lens is broken, the plunger moves forward and alters the switch contact position. Four replacement lens disks are provided with each assembly. The small hammer is attached to the break glass assembly via a mounting clip, along with a 12" chain, to insure it will not detach from the assembly.

Features & Benefits

- Surface mount in a standard 3-gang enclosure
- Compatible with all fail-safe type electronic locking systems
- An effective alternative to the standard pull box
- Stainless steel standard finish
- Models with LED or audible alarm
- Clearly marked signage indicating purpose of the release
- Includes 4 replacement lens disks

740 Series Specifications	
Contact rating	6A @ 30 VDC Form Z switch

Ordering Information

- **740** – Includes break glass switch assembly and hammer mounted to a silk-screened 3-gang stainless switch plate
- **741** – With indicator light
- **742** – With Sonalert horn operating at 80 dB @ 2 feet

Allegion, the Allegion logo, Schlage and the Schlage logo are trademarks of Allegion plc, its subsidiaries and/or affiliates in the United States and other countries. All other trademarks are the property of their respective owners.

© 2024 Allegion plc
003911, Rev. 01/24

660 Series

Concealed Remote Button

Overview

The 660 Series concealed remote button is designed for under the counter or concealed desk applications, and it is used to release an electric or electronic locking mechanism from a remote location. The 660 Series concealed remote button is mounted in a mini aluminum box, 2" x 2" x 1". The 660 is available with a momentary action pushbutton or maintained action toggle switch. Both can be surface mounted.

Features & Benefits

- Surface mount application
- Choice of maintained or momentary action
- Compact size
- Recommended for concealed desk application

660 Series Specifications	
Switch contact rating	6 amp @ 120 VAC
Length	2"
Width	2"
Height	1"

Ordering Information

- **660-T4** - SPDT maintained toggle
- **660-PB** - SPDT momentary pushbutton

Allegion, the Allegion logo, Schlage and the Schlage logo are trademarks of Allegion plc, its subsidiaries and/or affiliates in the United States and other countries. All other trademarks are the property of their respective owners.

© 2024 Allegion plc
003912, Rev. 01/24

650 Series

Keyswitches

Overview

Schlage 650 Series keyswitches utilize an innovative magnetic spring design which allows installers to configure both clockwise and counterclockwise key turn direction as well as momentary or maintained action in seconds. Single gang and narrow stiles are available with numerous options which include heavy-duty plate, weather resistant cover (single gang size only), 2 LED lights – green/red, anti-tamper switch and Schlage Everest cylinder. in addition to the standard (630) satin stainless steel finish, there are three additional architectural finishes to choose from.

Features & Benefits

- Easy to install and maintain
- Single gang and narrow stile offer ultimate flexibility
- Patented magnetic spring design allows installers to configure momentary to maintained action in seconds
- UL 294 Listed

650 Series Specifications	
Switch contact rating	5 amp @ 30 VDC
	SPDT contacts

ATS switch closes when cover is on 0.025A@28VDC
LED indicator lights operate at 12/24 VDC 0.500A @ 30VDC

Ordering Information

- **653-04** - SPDT maintained single direction
- **653-05** - SPDT momentary single direction
- **653-14** - DPDT maintained single direction
- **653-15** - DPDT momentary single direction
- **653-1414** - (2) DPDT maintained bi-direction
- **653-1415** - DPDT maintained x DPDT momentary
- **653-1515** - (2) DPDT momentary bi-direction
- **653-041** - SPDT maintained x key remove one position
- **653-0404** - (2) SPDT maintained bi-direction
- **653-0405** - SPDT maintained x SPDT momentary
- **653-141** - DPDT maintained x key remove one position
- **653-0505** - (2) SPDT momentary bi-direction

Options

- **L2** - Two LEDs (red/green), dual voltage
- **NS** - Narrow stile - stainless steel plate (1-3/4" x 4-1/2")
- **ATS** - Anti-tamper switch
- **WP** - Weather-resistant cover fits 1-1/8" cylinder only (not available with NS and L2 options)
- **CYL** - 1-1/4" Schlage Everest® mortise cylinder and 1/8" spacer ring (keyed different)
- **CYL-KA** - 1-1/4" Schlage Everest mortise cylinder and 1/8" spacer ring (keyed alike)

Finishes

- **630** - Satin finish on .035 stainless steel (standard)
- **SF-626** - Satin Chrome on heavy-duty zinc
- **SF-613** - Oil Rubbed Bronze on heavy-duty zinc
- **SF-625** - Bright Chrome on heavy-duty zinc

Note: 650 Series keyswitches operate with either a 1-1/8", 1-1/4", 1-3/8", or 1-1/2" cylinder having a straight type cam.

- 1-1/8" mortise cylinder fits direct in key switch - no blocking ring required.
- 1-1/4" cylinders require a 1/8" blocking/spacer ring, Schlage part number 36-079-012 or equivalent (included with the CYL and CYL-KA options).
- 3/8" mortise cylinder housing for SFIC cores - requires 1/4" blocking ring Schlage part number 36-079-025 or equivalent.
- 1-1/2" mortise cylinder housing for FSIC cores - requires 3/8" blocking ring Schlage part number 36-079-037 or equivalent.

All cylinders, except 1-1/4" as CYL or CYL-KA options, must be ordered separately.

Innovative magnetic spring technology allows installers to configure models in seconds

Momentary action

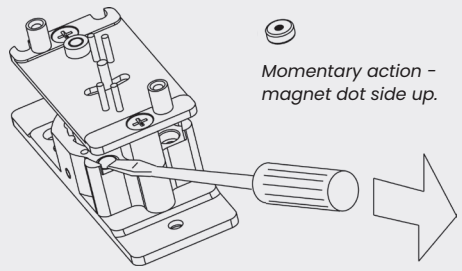

Maintained action

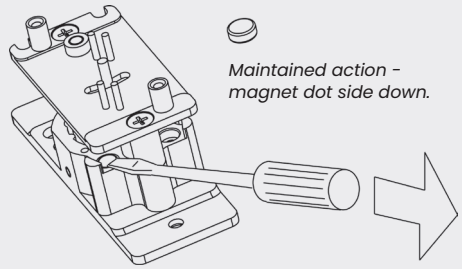

Allegion, the Allegion logo, Schlage and the Schlage logo are trademarks of Allegion plc, its subsidiaries and/or affiliates in the United States and other countries. All other trademarks are the property of their respective owners.

© 2024 Allegion plc
003907, Rev. 01/24

672 Series

Touchbar

Overview

The 672 touchbar is a request-to-exit device which releases electronic locking devices, most commonly electromagnetic locks when the bar is depressed. The “PUSH TO EXIT” signage provides an obvious exit indication for building occupants and the simplified design allows for reversing the signage in the field. The new pivoting bar design allows 1/4" activation and the 2-1/4" low profile provides ample clearance through the door - notably less than others in the industry.

The 672 touchbar request-to-exit device is easy to install and simple to wire. The device’s rugged cast ramped end caps deflect blows and provide extra durability.

- 1/4" Movement activates immediate release
- Standard double pole, double throw switch utilized

Features & Benefits

- 1/4" movement of bar activates immediate release
- Large “PUSH TO EXIT” lettering provides obvious exit indication with glow-in-the-dark option
- Low profile provides ample clearance through the door
- Releases electromagnetic or electrified locks when bar is depressed
- Left- or right-hand reverse (field reversible)
- Field sized or orderable for 36", 42" or 48" doors
- For aluminum, hollow metal and wood doors
- Pivoting bar design allows 1/4” activation
- Heavy-duty aluminum extrusion with powder coat cast metal end caps for maximum durability
- Quick installation brackets/universal mounting system
- UL 294 and UL 1034 Listed

672 Touchbar Electrical Specifications	
Switch	DPDT contacts rated 4 amps @ 30 VDC
Wiring	6 conductor cable - 20 AWG (standard)

Ordering Information

Models

- **672 RD** - Black with red “PUSH TO EXIT”
- **672 GID** - Black with glow in the dark “PUSH TO EXIT”

Door Size

- 36", 42" or 48"

Finishes

- **628** - Satin anodized aluminum (standard)
- **313** - Dark satin bronze anodized aluminum

Handing

- **RHR** - Right hand reverse
- **LHR** - Left hand reverse -field reversible

Options

- **WD -** Through bolt door kit for heavy-duty wood door and hollow metal door applications
- **AR** - 18" x 1/2" armored door cord (less wire)
- **SHK** - Aluminum door mounting shim kit includes brackets, shims and screws for narrow stile aluminum doors.*

* Note: Screw pack has self-drilling and self-tapping screws for aluminum and wood door applications and rivnuts for hollow metal door applications.

Allegion, the Allegion logo, Schlage and the Schlage logo are trademarks of Allegion plc, its subsidiaries and/or affiliates in the United States and other countries. All other trademarks are the property of their respective owners.

© 2024 Allegion plc
003909, Rev. 01/24

692 Series

SmartBar™

Overview

The 692 SmartBar is an electronic switching device with no moving parts, which serves as a non-latching request-to-exit device. It allows one motion egress at doors equipped with an electronic locking device, most commonly an electromagnetic lock, with “no prior knowledge” required by the user. Touching the SmartBar at any point on the bar activates internal circuitry which controls power to the locking device. No moving parts results in low maintenance and long life.

The 692 SmartBar provides two directionally opposed infrared detection circuits to sense an exit request. As a person touches the bar, the light beam is broken. The redundant system provides a high level of life safety and peace of mind to the end user.

An audible alarm is standard. This feature provides a security alarm to alert when there is a prolonged unlocked condition caused by a continued break in the light beam. This feature is desirable in applications requiring monitoring of security conditions or delayed egress.

- Dual Infrared detection circuits
- No moving parts – one motion egress
- Audible alarm standard, alerts prolonged unlock condition
- Standard double pole, double throw switch utilized

Features & Benefits

- Infrared detection along bar releases locking device when light beam is broken
- One motion egress when installed with electromagnetic or electrified locks
- Large “PUSH TO EXIT” lettering provides obvious exit indication with glow-in-thedark option
- Low profile provides ample clearance through the door
- Audible alarm is standard
- Left- or right-hand reverse (field reversible)
- Field sized or orderable for 36”, 42” or 48” doors
- For aluminum, hollow metal and wood doors
- No moving parts for low maintenance and long life
- Heavy-duty aluminum extrusion with cast metal end caps for maximum durability
- Quick installation brackets/universal mounting system
- UL 294 and UL 1034 Listed

692 SmartBar Electrical Specifications	
Input voltage	12 or 24 VDC maximum current draw .5 amps
Switch	DPDT contacts rated 4 amps @ 30 VDC
Wiring	8 conductor cable - 20 AWG (standard)

Ordering Information

Models

- **692 RD** - Black with red "PUSH TO EXIT"
- **692 GID** - Black with glow in the dark "PUSH TO EXIT"

Door Size

- 36", 42" or 48"

Finishes

- **628** - Satin anodized aluminum (standard)
- **313** - Dark satin bronze anodized aluminum

Handing

- **RHR** - Right hand reverse
- **LHR** - Left hand reverse -field reversible

Options

- **WD -** Through bolt door kit for heavy-duty wood door and hollow metal door applications
- **SHK** - Aluminum door mounting shim kit includes brackets, shims and screws for narrow stile aluminum doors.*

* Note: Screw pack has self-drilling and self-tapping screws for aluminum and wood door applications and rivnuts for hollow metal door applications. 18" x 1/2" armored door cord shipped standard.

Allegion, the Allegion logo, Schlage and the Schlage logo are trademarks of Allegion plc, its subsidiaries and/or affiliates in the United States and other countries. All other trademarks are the property of their respective owners.

© 2024 Allegion plc
003904, Rev. 01/24

VON DUPRIN®

Electrical Power Transfer

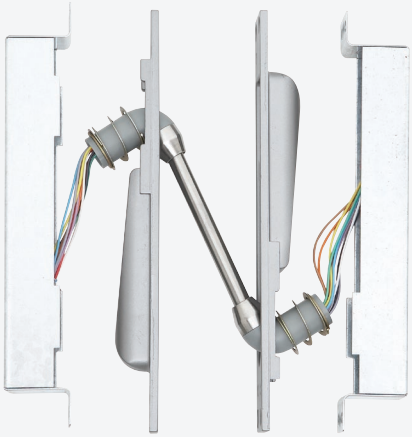

Overview

Electric power transfer provides a means of transferring electrical power from a door frame to the edge of a swinging door. The units are completely concealed when the door is in the closed position, and are ideally suited for installations involving abuse or heavy traffic.

Two models are available; EPT-2, two 18 gauge wires and EPT-10, ten 24 gauge wires.

Features & Benefits

- UL Listed for use on fire doors
- UL listed as Miscellaneous Door Accessory
- Ball-and-socket joint construction provides cut and pinch protection for wiring
- Built for heavy traffic and high abuse openings
- EPT-2 and EPT-10 are UL634, ULC/ORD C634 and UL10C/CAN-ULC-S104 certified
- PNT-1 is UL10C/CAN-ULC-S104 certified

Door Applications

- Automatic Voltage Selection (AVS) senses the voltage applied to the lock and responds accordingly

Finishes

- 622 - Powder Coated Matte Black
- 689 - Powder Coated Aluminum
- 695 - Powder Coated Dark Bronze

Dimensions	
Housing	9" X 1-1/4 X 1-5/8 (229mm X 32mm X 38mm)
EPT-2	Two 18 gauge wires, up to 2 AMPS @ 24VDC, with a 16 AMPS maximum surge
EPT-10	Ten 24 gauge wires, up to 1 AMPS @ 24VDC, with a 16 AMPS maximum surge
PNT-1	5/32" tubing

To Order, Specify:

- EPT-2, EPT-10 or PNT-1
- Finishes: 622, 689, 695

© 2024 Allegion plc
010106, Rev. 01/24

IVES

Electrified Hinges

Overview

Ives offers electrification options on a wide variety of our 3 knuckle and 5 knuckle hinges, including standard and heavy weight. These hinges transfer power and signals from the frame to the door. Electrified hinges hide wiring from view to provide a more pleasing aesthetic and a more secure application.

Electrified hinges integrate seamlessly with your access control system and your door mounted electrified hardware. Ives electrified offering comes standard with Allegion Connect, a quick and easy way to connect power sources for the entire opening. With no wire cutting needed, you can reduce installation and maintenance time, ultimately cutting cost. After installation, Allegion Connect continues to provide benefits throughout the lifetime of the opening by offering a comprehensive service kit.

For more information about the Allegion Connect offering, contact customer support at 877-671-7011.

Features & Benefits

- Electrified hinge available in 3 and 5 knuckle
- High quality brass ferrules and plastic tubing protect the wires
- Comes standard with Allegion Connect 8-pin connectors
- Available in four wire (TW4), eight wire (TW8) and twelve wire (TW12)
- Available electrical monitor for door position monitoring (MON, TW4M, TW8M)
- Through-wire hinges cycle tested to ensure durability
- UL Listed - UL634
- Certified to ANSI/BHMA A156.1
- Come standard with Non-Removeable Pin (NRP) option
- Packaged one hinge per box with standard wood and machine screws
- Quick ship available on select models; view the Ives Pricebook for details

Available Options

- Through-wire – TW4 (4 wires), TW8 (8 wires), and TW12 (12 wires)*
- Monitor – MON**
- Through-wire with monitor – TW4M and TW8M**
- Through-wire is rated for 50 volts AC/DC at 3.5 AMP continuous and 16 AMP pulse, maximum pulse 400 millisecond
- Monitor rated 30VDC at .25 AM

* Not available on 3PB1 models, or hinges size 4 x 4 or smaller.
** Not available on 3PB1, 3CB1, 3SP1 and 5PB1 models or hinges size 4 x 4 or smaller.

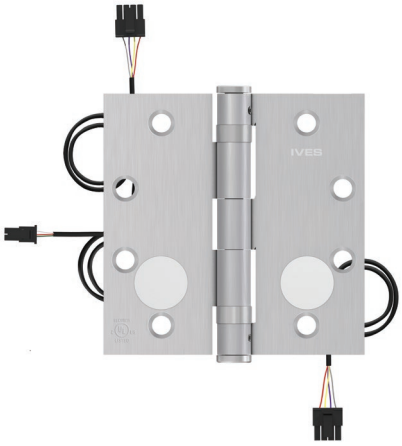

Features 5BB1 hinge and the through-wire 8 with monitor (TW8M)

Finishes											
Brass											
Ives finish	US3	US4	US10	US10B	US10A	US11E	US15	US19	US26	US26D	
BHMA	605	606	612	613	614	B643e/716	619	B-BLK	625	626	
Steel											
Ives finish	USP	US3	US4	US10	US10B	US10A	US11E	US15	US19	US26	US26D
BHMA	600	632	633	639	640	641	F643e/716	646	F-BLK	651	652
Stainless steel											
Ives finish	US32	US32D									
BHMA	629	630									

For more information, such as install instructions and templates, visit US.Allegion.com.

Allegion, the Allegion logo, Ives and the Ives logo are trademarks of Allegion plc, its subsidiaries and/or affiliates in the United States and other countries. All other trademarks are the property of their respective owners.

© 2024 Allegion plc
010116, Rev. 01/24

788/798 Series

Armored Door Cords

Overview

Used when installing electric exit devices or electrified locks, armored door cords provide a simple and economical solution for transferring power from frame to door. Schlage flexible door cords are offered in two lengths each with options for less wires or including four, 20 gauge conductor wires (red, green, white and black). For doors with a 90 degree swing.

Features & Benefits

- ANSI/UL 10C, CAN/ULC-S104-15

Specifications

Acceptable Wire Size Combinations

- Five 18 gauge
- Two 18 gauge and four 20 gauge
- Two 18 gauge and seven 22 gauge
- Seven 20 gauge
- Twelve 22 gauge

5/16" Interior Diameter; 3/8" Outside Diameter Flexible Door Cord

- **788-12** - 12" x 3/8" less wires (inswinging)
- **788C-12** - 12" x 3/8" with four 20 gauge, 20" long conductor wires (red, green, white, black)
- **788-18** - 18" x 3/8" less wires (outswinging)
- **788C-18** - 18" x 3/8" with four 20 gauge, 26" long conductor wires (red, green, white, black)

3/8" Interior Diameter; 1/2" Outside Diameter Flexible Door Cord

Acceptable wire size combinations

- **798-12** - 12" x 1/2" less wires (inswinging)
- **798C-12** - 12" x 1/2" with four 20 gauge, 20" long conductor wires (red, green, white, black)
- **798-18** - 18" x 1/2" less wires (outswinging)
- **798C-18** - 18" x 1/2" with four 20 gauge, 26" long conductor wires (red, green, white, black)

Certification

- **UL 10C**

Allegion, the Allegion logo, Schlage and the Schlage logo are trademarks of Allegion plc, its subsidiaries and/or affiliates in the United States and other countries. All other trademarks are the property of their respective owners.

© 2024 Allegion plc
005006, Rev. 01/24

800/801 Series

Remote & Local Monitoring Stations

Overview

800 Series Local & Remote Monitoring Station

The 800 Series monitoring stations can provide monitoring for a single zone with choice of audible or visual monitoring.

801 Series Local & Remote Monitoring Station

The 801 unit includes an audible and visual indication of lock status and delay activation. Interfaces with electromagnetic locks with magnetic bond sensor (MBS) option. Unit mounts in a standard single gang electrical box. The 801-KS fulfills a code requirement stating that a local signal assures users that a delayed egress system is functional. The unit includes an audible and visual indication of lock status and delay activation. Provides a Single Pole, Double Throw (SPDT) momentary x SPDT maintained contact arrangement keyswitch for legal release and reset of the system, which interfaces with a standard 1-1/4" mortise cylinder with standard straight cam. Option to interface with electromagnetic locks with Magnetic Bond Sensor (MBS). Unit mounts in a standard double gang electrical box.

Features & Benefits

- 800 Series local and remote monitoring stations
  - 800L1 with one LED indicator (red, green or amber)
  - 800L2 with two LED indicators (red, green or amber) (photo)
  - 800A horn monitor, 70 dB @ 2 ft
- 801 Series local and remote monitoring stations
  - 801 with three LED indicators and horn monitor, 70 dB @ 2 ft
  - 801KS with LED indicators, horn monitor and keyswitch (photo)

800 Specifications	
LED operating power	12-24 VDC
LED current draw	3-14 mA each
Audible input	10-28 VDC
Audible current draw	3-14 mA
Decibel rating	70 dB @ 2 ft
Single gang unit	
Width	2-3/4"
Depth	1-1/8"
Height	4-1/2"
Finish	Stainless steel
800L1	One (1) LED indicator - red, green and amber
800L2	Two (2) LED indicators - red, green and amber
800A	Audible sounder

801 Specifications	
LED operating power	12-24 VDC
LED current draw	3-14 mA each
Audible input	10-28 VDC
Audible current draw	3-14 mA
Decibel rating	70 dB @ 2 ft
Single gang unit - 801* Local or remote monitoring system	
Width	2-3/4"
Depth	1-1/8"
Height	4-1/2"
Finish	Stainless steel
Double gang unit - 801-KS* local or remote monitoring system with keyswitch (less cylinder)	
Width	4-9/16"
Depth	1-15/16"
Height	4-1/2"
Finish	Stainless steel
Keyswitch contacts	5 Amp @ 30 VDC

*Note: 801/801-KS requires MBS on locking device.

Allegion, the Allegion logo, Schlage and the Schlage logo are trademarks of Allegion plc, its subsidiaries and/or affiliates in the United States and other countries. All other trademarks are the property of their respective owners.

© 2024 Allegion plc
005007, Rev. 01/24

8200 Series

Remote Monitor & Control Console

Overview

Schlage 8200 Series desk consoles provides door control and monitoring for up to eight zones. Designed to meet a wide range of security requirements, the 8200 Series can control and monitor electric strikes, electromagnetic locks, electromechanical exit devices or other electric locks. The console can also be used for surveillance of monitoring devices.

The circuit boards inside the console are shipped for four or eight zone applications. This design allows for momentary or maintained switch operation. Pushbuttons control and monitor assigned zones, and a signaling horn provides an audible alert of any conditions change that is associated with the red indicator lamp. Console control can be disabled with the security keyswitch.

Features & Benefits

- Slope front design, with anodized face plate and durable housing
- Each station provides maintained or momentary Single Pole, Double Throw (SPDT) pushbutton switch
- Red and green indicator lamps
- Security keyswitch
- Signaling horn
- Alarm reset button
- 24 VDC operation

8200 Specifications	
Switches (momentary or maintained)	1.0 amps 24 VDC
Lamps #85 red/green	40 mA @24 VDC
Terminal block	18/22 gauge wire
Alarm output	0.5 amps @ 24 VDC (breaker protected)
Temperature range	32˚ to 120˚F (0˚ to 49˚C)
Input voltage	24 VDC, +/- 15%

System Design Guide

There are a number of applications where an 8200 Series Console is used to monitor and control multiple door openings. It is ideal for use at a guard or nurse station. (An example of a riser diagram for a two door nurse's station console is shown below.)

Riser Diagram

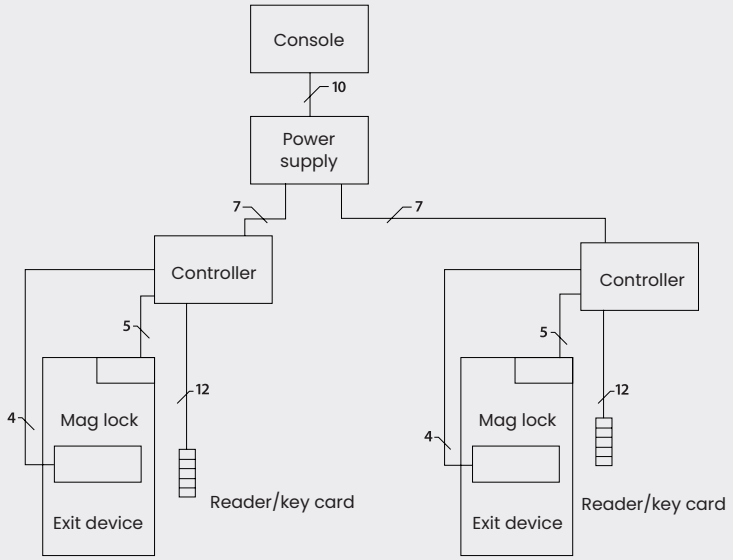

Description of System Operation

Two single doors, each normally closed and secured by a magnetic lock. Magnetic lock to include Magnetic Bond Sensor (MBS) for remote monitoring of secure/not-secure condition. Legal access to be provided by keypad system. Egress to be provided by touch sensitive exit bars. Remote control and monitoring to be by a slope front desktop console. Each of two stations shall provide a momentary pushbutton switch for legal release, a red indicator for "not-secure" condition and a green indicator for "secure" condition.

Ordering Information

Last digit indicates number of zones:

4 station console	8 station console
8204	8208

Pushbutton function

	1	2	3	4	5	6	7	8
8204	●	●	●	●				
8208	●	●	●	●	●	●	●	●

Pushbutton Function

- Select pushbutton function by zone.
- Select M (momentary) or A (alternate action, maintain) for each zone.

Accessories

Field installable push buttons

- 8200MS – Momentary switch assembly
- 8200AS – Alternate action (maintained) switch assembly

Allegion, the Allegion logo, Schlage and the Schlage logo are trademarks of Allegion plc, its subsidiaries and/or affiliates in the United States and other countries. All other trademarks are the property of their respective owners.

© 2024 Allegion plc
005004, Rev. 01/24

Scan II™

Passive Infrared Motion Sensors

Overview

The Scan II™ is a compact, passive infrared detector specifically designed for “requestto-exit” applications. It features adjustable relay latch time, an externally visible activation LED, and two form “C” relays.

The high-impact ABS plastic enclosure in black or white comes apart in 3 pieces for easy mounting and lock-in-place scanner angle adjustment. Internal angle setting marks aide optimal coverage configuration for both wall and ceiling mounting. Mounting height is 7 to 15 feet allowing coverage area of the Scan II sensor of up to 8 by 10 ft (2.4 m by 3 m).

Features & Benefits

- Adjustable relay latch time from 0.5 to 64 seconds
- Field-selectable fail safe/fail secure
- Included pattern masking kit snaps in place to narrow scan field and help prevent unwanted activations
- Activation LED is visible at a distance and can be configured to OFF as needed
- Intended for indoor use only
- Wall or ceiling mounted with lock-in-place angle adjustment
- UL294 and ULC-S319, Class 1 listed by manufacturer
- High-impact ABS plastic enclosure and internal electronics can endure temperatures of -20° to 120°F
- Inconspicuous unit is only 1.5” x 6.25” x 1.5” in either black or white

Specifications

Models

- Scan II-B: black with externally visible activation LED
- Scan II-W: white with externally visible activation LED

Power Requirements

- 12/24 VDC: 35 mA @ 12 VDC; 38 mA @ 24 VDC when activated
- 2/24 VAC: 42 mA @ 12 VAC; 48 mA @ 24 VAC when activated
- 38 mAh required for standby operation (no internal standby battery)

Relay

- Two form "C" relay contacts rated 2.0 Amp @ 30 VDC or VAC maximum for DC resistive load

Installation Options

- Adjustable relay latch time from 0.5 to 64 seconds
- Relay mode can be programmed to reset when timer expires or remain activated until motion stops
- Field-selectable fail safe/fail secure
- Mounting height of 7 to 15 feet (indoors only)
- Lock-in-place pattern adjustment is +/- 14° with separate settings for wall vs. ceiling application

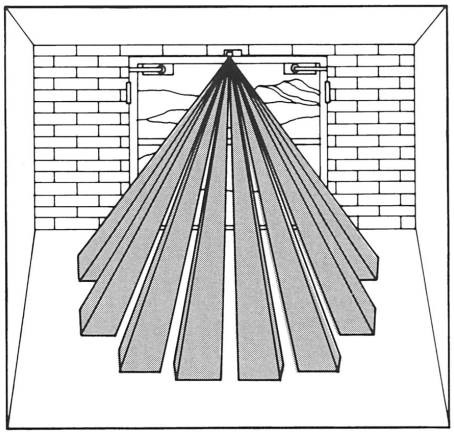

Standard pattern
Shown wall mounted, angled 14° down.

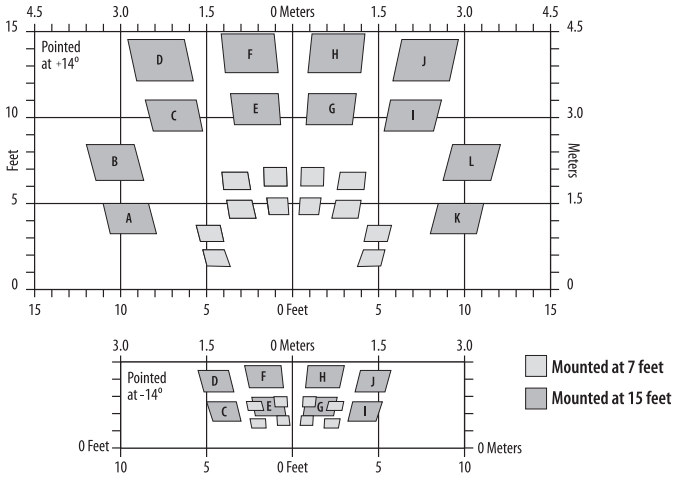

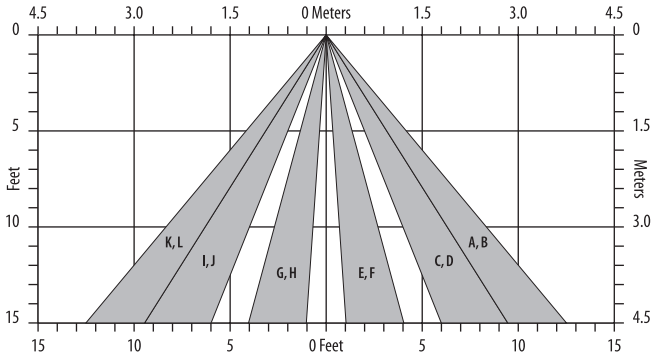

Front view

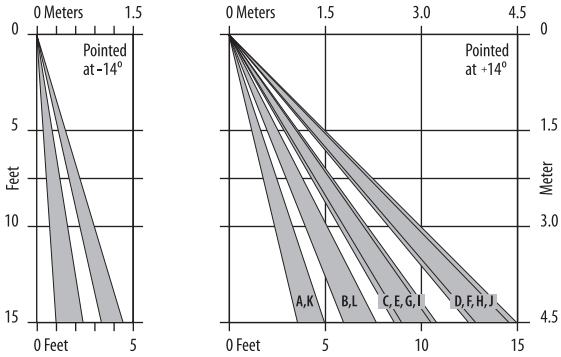

Side view

Allegion, the Allegion logo, Schlage and the Schlage logo are trademarks of Allegion plc, its subsidiaries and/or affiliates in the United States and other countries. All other trademarks are the property of their respective owners.

© 2024 Allegion plc
003908, Rev. 01/24

1910 Series

Electronic Horns

Overview

Electric horns are designed for use as an immediate local audible warning device incorporated in a security system. 1910 celica horns have six combinations of volume using continuous or intermittent tone that are easy to configure. Latching models can be set up to sound when a door latchbolt retracts or the door opens. Strobe light models are also available.

Units are flush (partially recessed) or surface mounted using a 4" black box and attached using two #8-32 X 3/4" screws. Surface and flush mounting kits are included with all horns.

Features & Benefits

- Latching models alarm upon the latch release or opening of a connected door
- Audible warning has six combinations of volume using intermittent or continuous tone with loudest tested to 102 dba
- Strobe option adds visual warning indication
- Intended for indoor use only
- Flush mount to wall over a standard one- or two-gang electrical box
- Surface mount using pull through wiring and the backbox kit included with the product
- Horn shell and trim skirt in off-white
- Unit dimensions: 4-3/4" W x 5-1/2" H

Specifications

Models

- **1910-1:** 12/24 VDC horn
- **1910S-1:** 24 VDC horn with strobe
- **L1910-1:** 24 VDC horn with latching
- **L1910S-1:** 24 VDC horn with strobe and latching

Power Requirements

- Less than 14 mA @ 12 VDC
- Less than 28 mA @ 24 VDC
- Less than 71 mA @ 24 VDC with strobe

Other

- Operating temperature: 32°F to 120°F
- Anechoic chamber tested @30 V 102 dba
- UL reverberant room tested @30 V 88 dba

Allegion, the Allegion logo, Schlage and the Schlage logo are trademarks of Allegion plc, its subsidiaries and/or affiliates in the United States and other countries. All other trademarks are the property of their respective owners.

© 2024 Allegion plc
003905, Rev. 05/24

Door Position Switches

Overview

Door position switches are used to detect the open or closed status of an opening and then send this status to a control panel. They come in a variety of shapes and sizes and are designed for monitoring door positions, roof hatches, gates etc.

Concealed SPDT Magnetic Switches

- For wood doors and frames
- 0.3 Amps @ 30 VDC
- UL10C/CAN-ULC-S104

679-05

- For hollow metal doors and frames
- 0.3 Amps @ 30 VDC
- UL10C/CAN-ULC-S104

679-05HM

- For wood doors and metal frames
- 0.3 Amps @ 30 VDC
- UL10C/CAN-ULC-S104

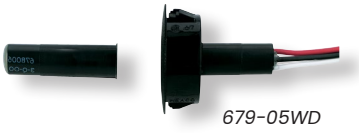

679-05WD

Concealed/Flush Mount Magnetic Switches

- For aluminum, wood and hollow metal doors
- 0.25 Amps @ 30 VDC
- UL10C/CAN-ULC-S104

7764

Surface Mount Magnetic Switches

- For aluminum, wood and hollow metal doors
- 0.25 Amps @ 30 VDC
- UL10C/CAN-ULC-S104

7766

Overhead Door, Floor Mount Magnetic Switches

- For aluminum, wood and hollow metal doors
- 0.25 Amps @ 30 VDC
- UL10C/CAN-ULC-S104

674-OH

Ordering Information

- **674-OH** - Overhead door floor mount
- **679-05** - Wood door and frame
- **679-05HM** - Hollow metal door and frame
- **679-05WD** - Wood door and metal frame
- **7764** - Concealed/flush mount
- **7766** - Surface mount

Allegion, the Allegion logo, Schlage and the Schlage logo are trademarks of Allegion plc, its subsidiaries and/or affiliates in the United States and other countries. All other trademarks are the property of their respective owners.

© 2024 Allegion plc
005005, Rev. 01/24

FSS1

High-Security Door Position Sensor

Overview

The FSS1 Series of high-security Door Position Sensors (DPS) are designed to provide a true high-security solution with adjustable anti-tamper features to help prevent against attacks through magnetic, electronic or physical means. It is a state-of-the-art monitoring solution with a flush mount version for new construction, and surface mount version as a superior replacement for traditional magnetic balanced reed sensors.

Specifically developed for high-security applications in government and military installations, FSS1 Series high-security DPS consist of magnetic sensors that are used to detect a unique magnetic footprint from an array of magnets on the opposing magnetic faceplate. The FSS1 learns its three-dimensional environment using one sensor to detect the distance of the magnetic faceplate in relation to the device, while the other sensors are used to determine the polarity, size, strength and position of the magnets on the unique faceplate. This three-dimensional data is registered into the memory of the device. Any interruption, change or tampering with the device cover will trigger a response at the door and/or through the network as a silent or audible alarm.

Features & Benefits

- Ideal for high security applications including server farms, government facilities, and military bases
- Utilizes sensors to detect a unique magnetic footprint created from an array of magnets in the faceplate
- Sensors “learn” a three-dimensional unique magnetic signature created by the polarity, size, strength, and position of the magnetic array plate
- Sensors can be recalibrated to accommodate for door replacement or maintenance
- Anti-tamper feature creates an audible and/or network notification in case of tampering to either the magnetic field or the device cover
- Low voltage, solid-state components
- 3 models: surface mount with conduit, surface mount no conduit, and flush mount (hinged doors only)
- Can be deployed in existing and new high-security facilities

FSS1 High Security DPS Specifications			
Part number	**194555101647**	**194555101654**	**194555101661**
Part description	Surface mount with conduit	Surface mount without conduit	Flush mount mortised
Door type	Hinged	Hinged	Hinged
Voltage / current	10-30VDC/<45mA	10-30VDC/<45mA	10-30VDC/<45mA
Sensor	Hall effect	Hall effect	Hall effect
Alarm and tamper contacts	2 by N.C. (normal closed) common N.O. (normal open), 0.2A @ 30V		
Door gap	.04-.26in vertical door gap, and up to .59in door movement for alarm to trigger 1-7mm vertical door gap, and up to 15mm door movement for alarm to trigger		
End of line compatibility	Space for type 1 and 2 end-of-line encryption modules		
Dimensions	L=2.96in H=1.34in D=1.38in L=75mm H=34mm D=35mm	L=2.96in H=1.34in D=1.38in L=75mm H=34mm D=35mm	L=4.33in D=1.26in W=1.38in L=110mm D=32mm W=35mm
Approvals	UL 634 High Security Level 2 - listed equipment BP9752		
Patents	Patents granted and pending worldwide based on PCT/AU2014/000210		
Manufacture	Designed and manufactured in Australia		

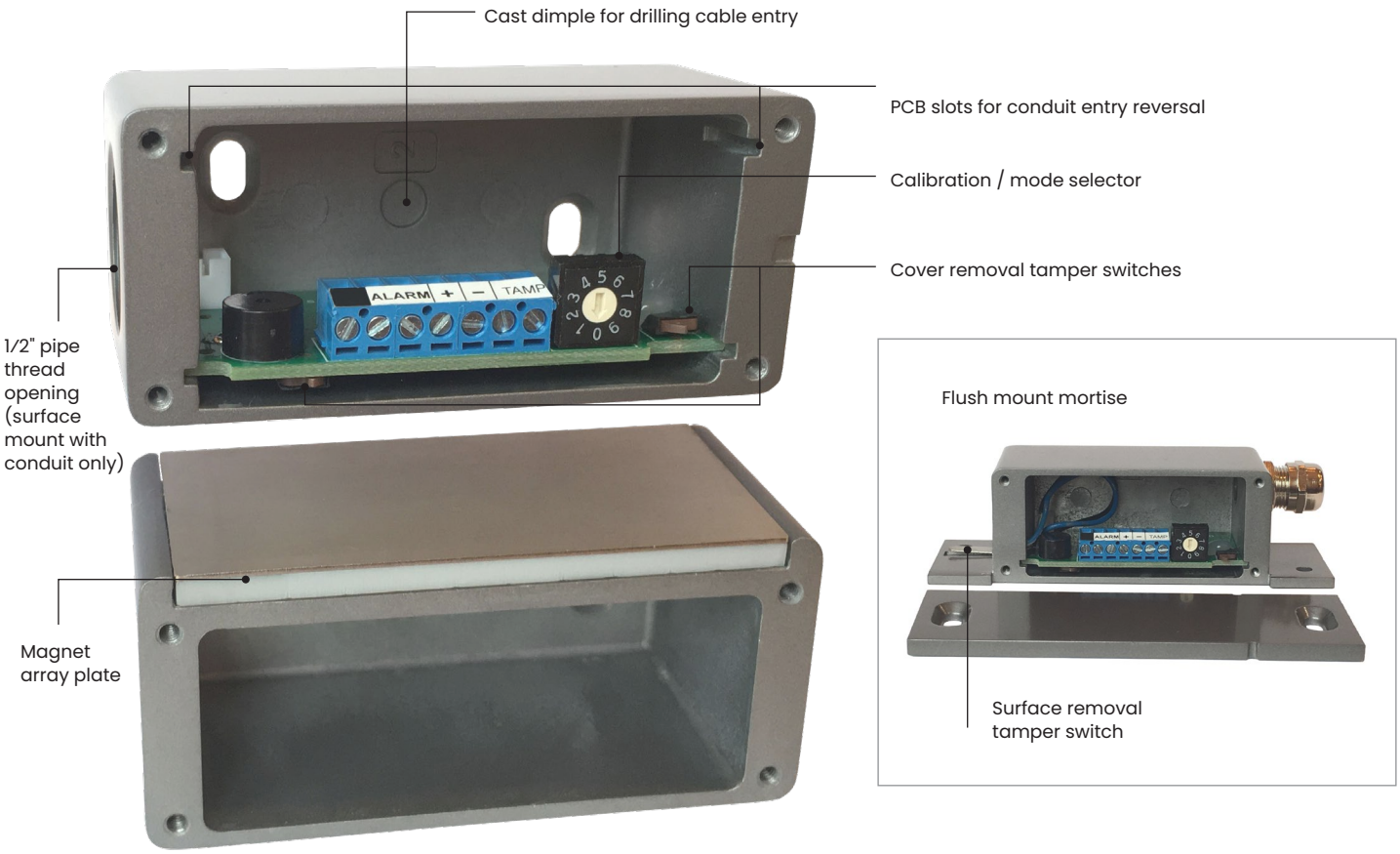

Allegion, the Allegion logo, Schlage and the Schlage logo are trademarks of Allegion plc, its subsidiaries and/or affiliates in the United States and other countries. All other trademarks are the property of their respective owners.

© 2024 Allegion plc
013632, Rev. 01/24

PB405 & PB405S

Electrified Powerbolts

Overview

The PB405 powerbolt is a mortise, right angle deadbolt with a .61" diameter bolt and a .67" throw. It is available fail-safe PB405 or fail-secure PB405S. Powerbolts install in the door frame for minimal impact to the door and a clean, cohesive opening

Note: Electromechanical powerbolts not recommended where life safety may be compromised or where panic bar hardware is the only means of egress.

Features & Benefits

- 12/24V DC
- Magnetic door position switch
- Built in relocking time delay, field selectable for 0, 3, 6 or 9 seconds
- Fail-safe or fail-secure
- Mortise mount powerbolts furnished in satin aluminum finish

Specifications

PB405 Electric Powerbolt Lock (Fail-Safe)

- Door position switch
- 12/24 VDC dual voltage, field selectable
- Current draw: 0.9A @ 12 VDC, 0.45A @ 24 VDC
- Fail-safe type (power to lock)
- Built-in relocking option
- Relocking time delay time: 0 sec., 3 sec., 5 sec., 9 sec. field selectable utilizing two simple dip switches
- Bolt diameter: 0.61 in
- Bolt throw: 0.67 in
- Weight: 1.9 lbs
- Dimension (L x W x D): 7.87 in x 1.26 in x 1.57 in

PB405S Electric Powerbolt Lock (Fail-Secure)

- Door position switch
- 12/24 VDC dual voltage, field selectable
- Current draw: 0.9A @ 12 VDC, 0.45A @ 24 VDC
- Fail-secure type (power to open.), MOV surge protection.
- Relocking time delay time: 0 sec., 3 sec., 5 sec., 9 sec. field selectable utilizing two simple dip switches
- Built-in relocking option
- Bolt diameter: 0.61 in
- Bolt throw: 0.67 in
- Weight: 1.9 lbs
- Dimension (L x W x D): 7.87 in x 1.26 in x 1.57 in

Ordering Information

- **405** - Rectangular front, fail-safe
- **405S** - Rectangular front, fail-secure
- **Fail-secure lock** – Requires power to unlock
- **Fail-safe lock** – Requires power to lock

Allegion, the Allegion logo, Schlage and the Schlage logo are trademarks of Allegion plc, its subsidiaries and/or affiliates in the United States and other countries. All other trademarks are the property of their respective owners.

© 2024 Allegion plc
005011, Rev. 01/24

442S

Electronic Cabinet Lock

Overview

The 442S is a compact and easy to install hardwired cabinet lock. It is fail secure and driven by a dual voltage solenoid. The voltage is field selectable 12 or 24 VDC. This makes ordering easy and provides greater flexibility in the field.

The 442S can be mounted horizontally or vertically to control access to a wide range of swinging or sliding cabinets and drawers. The 442S can be controlled by any kind of access control system that provides a dry contact output. Its small size and versatile mounting position allows you to bring increased monitoring and control to hard to reach applications such as pharmaceutical cabinets, cash drawers and display cases.

Features & Benefits

- Fail-secure power failure mode
- Dual voltage 12/24 VDC, field selectable
- Open architecture design, compatible with wide range of Physical Access Control Software (PACS) providers
- Flexible mounting options
- Ideal for pharmaceutical cabinets, cash drawers and display cases

Specifications	
Input voltage	12/24VDC dual voltage, field selectable
Current draw	.5 Amp @ 12VDC .25 Amp @ 24VDC
Dimensions (L x W x D)	3" x 1" x 1"

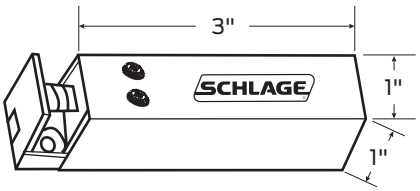

Ordering Information

Select Model

- 442S cabinet lock

Standard Features

- 12/24 VDC (field selectable)
- Fail secure
- Black Lexan finish

Allegion, the Allegion logo, Schlage and the Schlage logo are trademarks of Allegion plc, its subsidiaries and/or affiliates in the United States and other countries. All other trademarks are the property of their respective owners.

© 2024 Allegion plc
010152, Rev. 01/24

Appendix

This section of the Electronic access control catalog includes a number of wiring and riser diagrams for a variety of electronic access control applications.

This page intentionally left blank.

© 2024 Allegion plc
005138, Rev. 01/24

THIS DIAGRAM REPRESENTS A GENERIC CONFIGURATION. CUSTOM WIRING DIAGRAMS CAN BE ACQUIRED BY CONTACTING TECHNICAL SUPPORT.

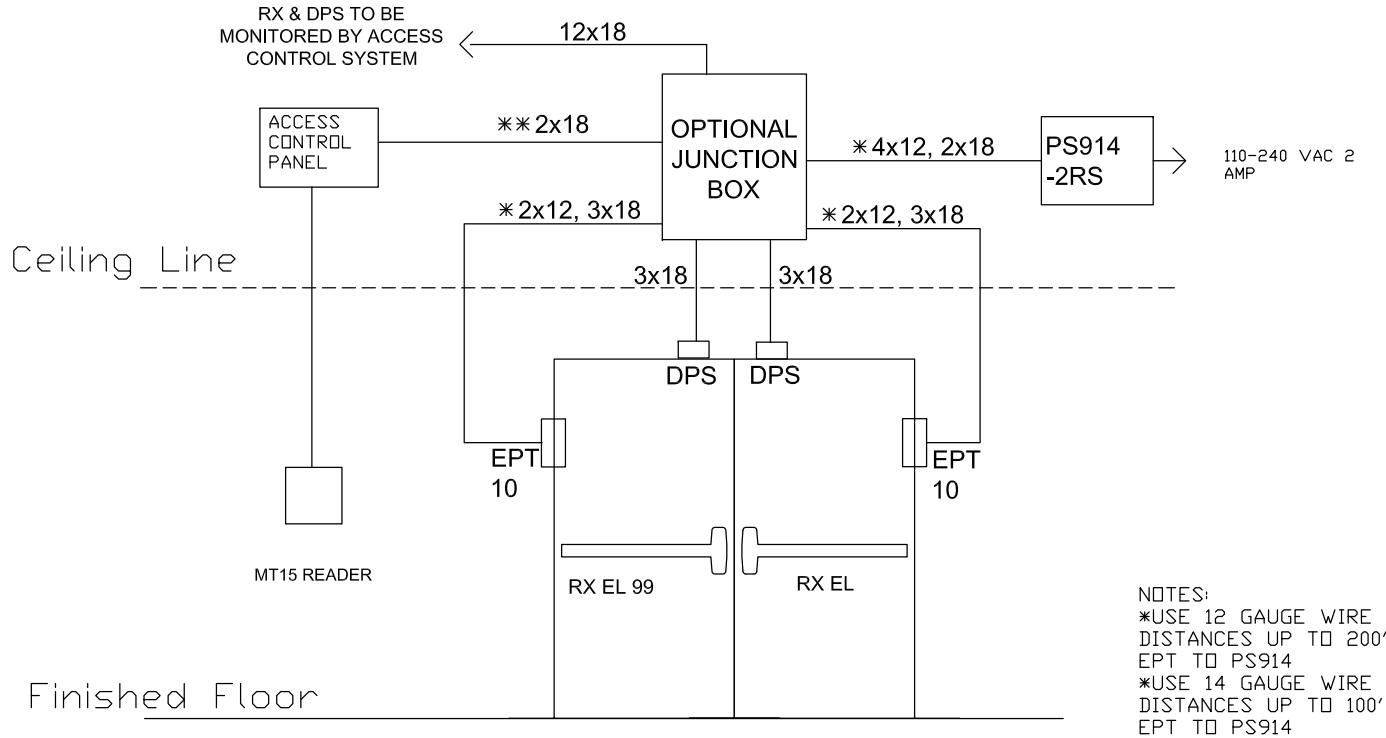

NOTES:
*USE 12 GAUGE WIRE FOR DISTANCES UP TO 200' FROM EPT TO PS914
*USE 14 GAUGE WIRE FOR DISTANCES UP TO 100' FROM EPT TO PS914
** ADDITIONAL WIRING REQUIRED. SEE MANUFACTURERS INSTALLTION INSTRUCTIONS.

NOTES:
1) ALL LOW VOLTAGE WIRING TO BE STANDARD, MULTI-CONDUCTOR COLOR CODED WITHOUT SPLICES.

2) WIRING TO CONFORM TO APPLICABLE NATIONAL, STATE AND LOCAL ELECTRICAL CODES.

3) REFER TO SPECIFIC PRODUCT INSTALLATION INSTRUCTIONS FOR SPECIFIC WIRING REQUIREMENTS.

4) THIS DRAWING IS FOR GRAPHICAL REPRESENTATION OF PRODUCTS DETAILED IN THE HARDWARE SET ONLY.

5) ADDITIONAL WIRING WILL BE REQUIRED FROM ACP THAT IS NOT SHOWN HERE. CONSULT PROVIDER FOR DETAILS.

HARDWARE USED:
1 - PS914-2RS
2 RX-EL99
2 DOOR POSITION SWITCHES
1 MT15 READER & ACP
2 EPT10
1 OPTIONAL JUNCTION BOX

TYPE
DOUBLE DOORS

OPERATION:
DOOR NORMALLY CLOSED & LATCHED BY ACCESS CONTROL SYSTEM.

VALID CREDENTIAL RETRACTS ELECTRIC PANIC DEVICES TO ALLOW ENTRY.

FREE EGRESS AT ALL TIMES.

DOOR POSITION & RX SWITCHES TO BE MONITORED BY ACCESS CONTROL SYSTEM.

DATE DRAWN: 03-27-13
REVISION DATE: 04-15-14
DRAWN BY: B DOVE
APPROVED BY: MH

ALLEGION™

TITLE: PS914-2RS WITH 2 RXEL99 RIM, MT15, DPS

DRAWING TYPE: RISER
DWG NO: 105234
DRAWN/CHECKED BY: B DOVE
REV D

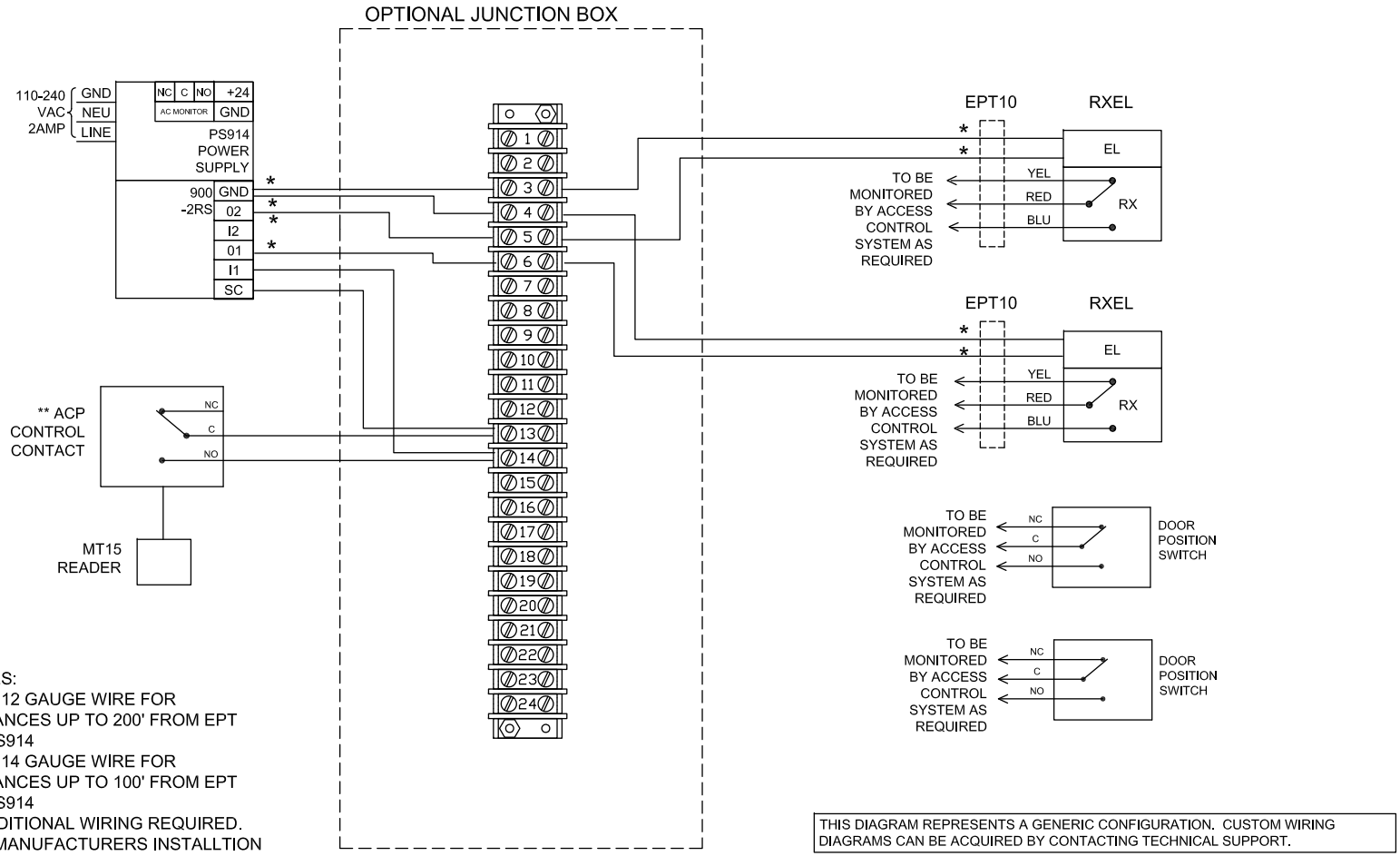

NOTES:
*USE 12 GAUGE WIRE FOR DISTANCES UP TO 200' FROM EPT TO PS914
*USE 14 GAUGE WIRE FOR DISTANCES UP TO 100' FROM EPT TO PS914
** ADDITIONAL WIRING REQUIRED. SEE MANUFACTURERS INSTALLTION INSTRUCTIONS.

THIS DIAGRAM REPRESENTS A GENERIC CONFIGURATION. CUSTOM WIRING DIAGRAMS CAN BE ACQUIRED BY CONTACTING TECHNICAL SUPPORT.

NOTES:
1) ALL LOW VOLTAGE WIRING TO BE STANDARD, MULTI-CONDUCTOR COLOR CODED WITHOUT SPLICES.

2) WIRING TO CONFORM TO APPLICABLE NATIONAL, STATE AND LOCAL ELECTRICAL CODES.

3) REFER TO SPECIFIC PRODUCT INSTALLATION INSTRUCTIONS FOR SPECIFIC WIRING REQUIREMENTS.

4) THIS DRAWING IS FOR GRAPHICAL REPRESENTATION OF PRODUCTS DETAILED IN THE HARDWARE SET ONLY.

5) ADDITIONAL WIRING WILL BE REQUIRED FROM ACP THAT IS NOT SHOWN HERE. CONSULT PROVIDER FOR DETAILS.

HARDWARE USED:
1 - PS914-2RS
2 RX-EL99
2 DOOR POSITION SWITCHES
1 MT15 READER & ACP
2 EPT10
1 OPTIONAL JUNCTION BOX

TYPE
DOUBLE DOORS

OPERATION:
DOOR NORMALLY CLOSED & LATCHED BY ACCESS CONTROL SYSTEM.

VALID CREDENTIAL RETRACTS ELECTRIC PANIC DEVICES TO ALLOW ENTRY.

FREE EGRESS AT ALL TIMES.

DOOR POSITION & RX SWITCHES TO BE MONITORED BY ACCESS CONTROL SYSTEM.

DATE DRAWN: 03-27-13	REVISION DATE: 04-15-14
DRAWN BY: B DOVE	APPROVED BY: MH

ALLEGION™

TITLE: PS914-2RS WITH 2 RXEL99 RIM, MT15, DPS

DRAWING TYPE: WIRING	DWG NO: 105234	REV D
	DRAWN/CHECKED BY: B DOVE	

THIS DIAGRAM REPRESENTS A GENERIC CONFIGURATION. CUSTOM WIRING DIAGRAMS CAN BE ACQUIRED BY CONTACTING TECHNICAL SUPPORT.

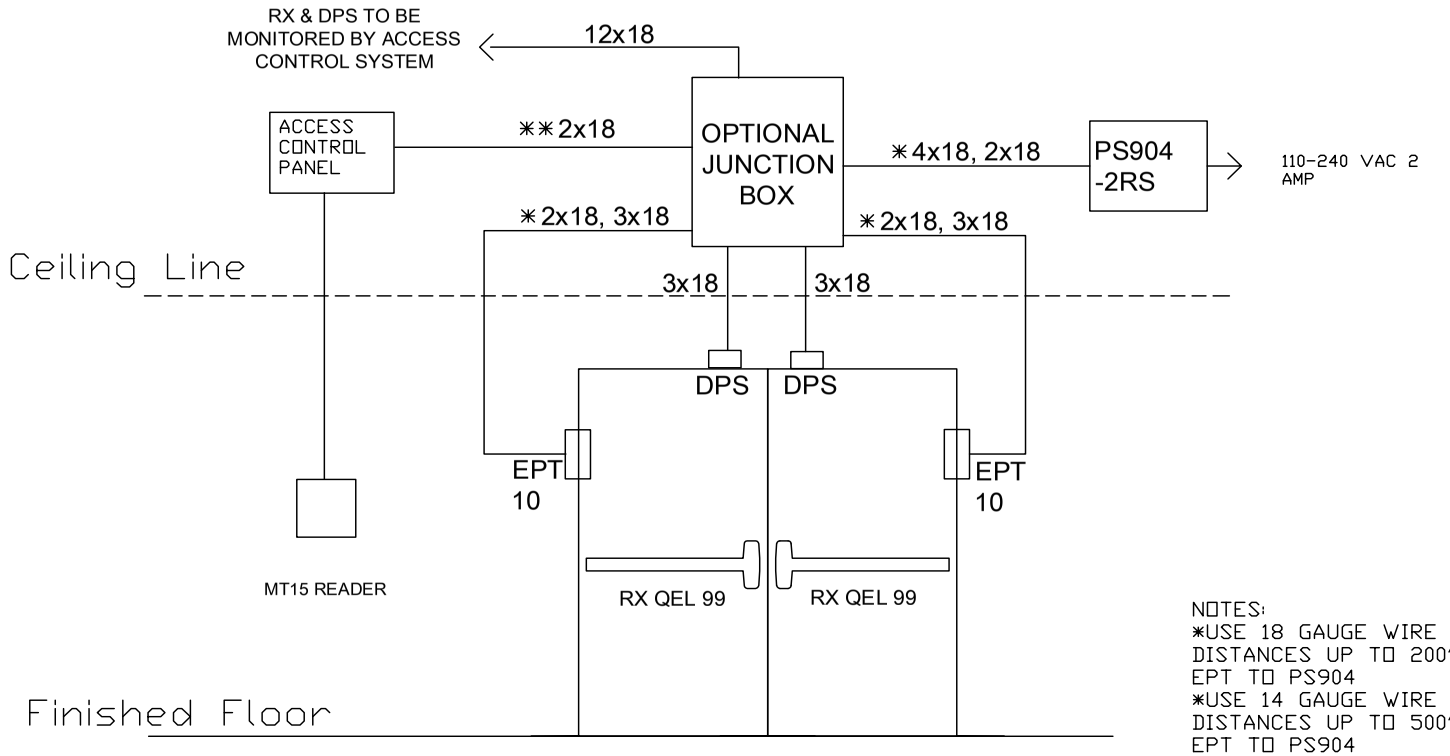

NOTES:
*USE 18 GAUGE WIRE FOR DISTANCES UP TO 200' FROM EPT TO PS904
*USE 14 GAUGE WIRE FOR DISTANCES UP TO 500' FROM EPT TO PS904
** ADDITIONAL WIRING REQUIRED. SEE MANUFACTURERS INSTALLTION INSTRUCTIONS.

NOTES:
1) ALL LOW VOLTAGE WIRING TO BE STANDARD, MULTI-CONDUCTOR COLOR CODED WITHOUT SPLICES.

2) WIRING TO CONFORM TO APPLICABLE NATIONAL, STATE AND LOCAL ELECTRICAL CODES.

3) REFER TO SPECIFIC PRODUCT INSTALLATION INSTRUCTIONS FOR SPECIFIC WIRING REQUIREMENTS.

4) THIS DRAWING IS FOR GRAPHICAL REPRESENTATION OF PRODUCTS DETAILED IN THE HARDWARE SET ONLY.

5) ADDITIONAL WIRING WILL BE REQUIRED FROM ACP THAT IS NOT SHOWN HERE. CONSULT PROVIDER FOR DETAILS.

HARDWARE USED:
1 - PS904-2RS
2 RX-QEL99
2 DOOR POSITION SWITCHES
1 MT15 READER & ACP
2 EPT10
1 OPTIONAL JUNCTION BOX

TYPE
DOUBLE DOORS

OPERATION:
DOOR NORMALLY CLOSED & LATCHED BY ACCESS CONTROL SYSTEM.

VALID CREDENTIAL RETRACTS QUIET ELECTRIC PANIC DEVICES TO ALLOW ENTRY.

FREE EGRESS AT ALL TIMES.

DOOR POSITION & RX SWITCHES TO BE MONITORED BY ACCESS CONTROL SYSTEM.

DATE DRAWN: 02-16-18
REVISION DATE: 02-16-18
DRAWN BY: B DOVE

ALLEGION™

TITLE: PS904-2RS WITH 2 RXQEL99 RIM, MT15, DPS

DRAWING TYPE: RISER
DWG NO: 112131R
DRAWN/CHECKED BY: B DOVE
REV A

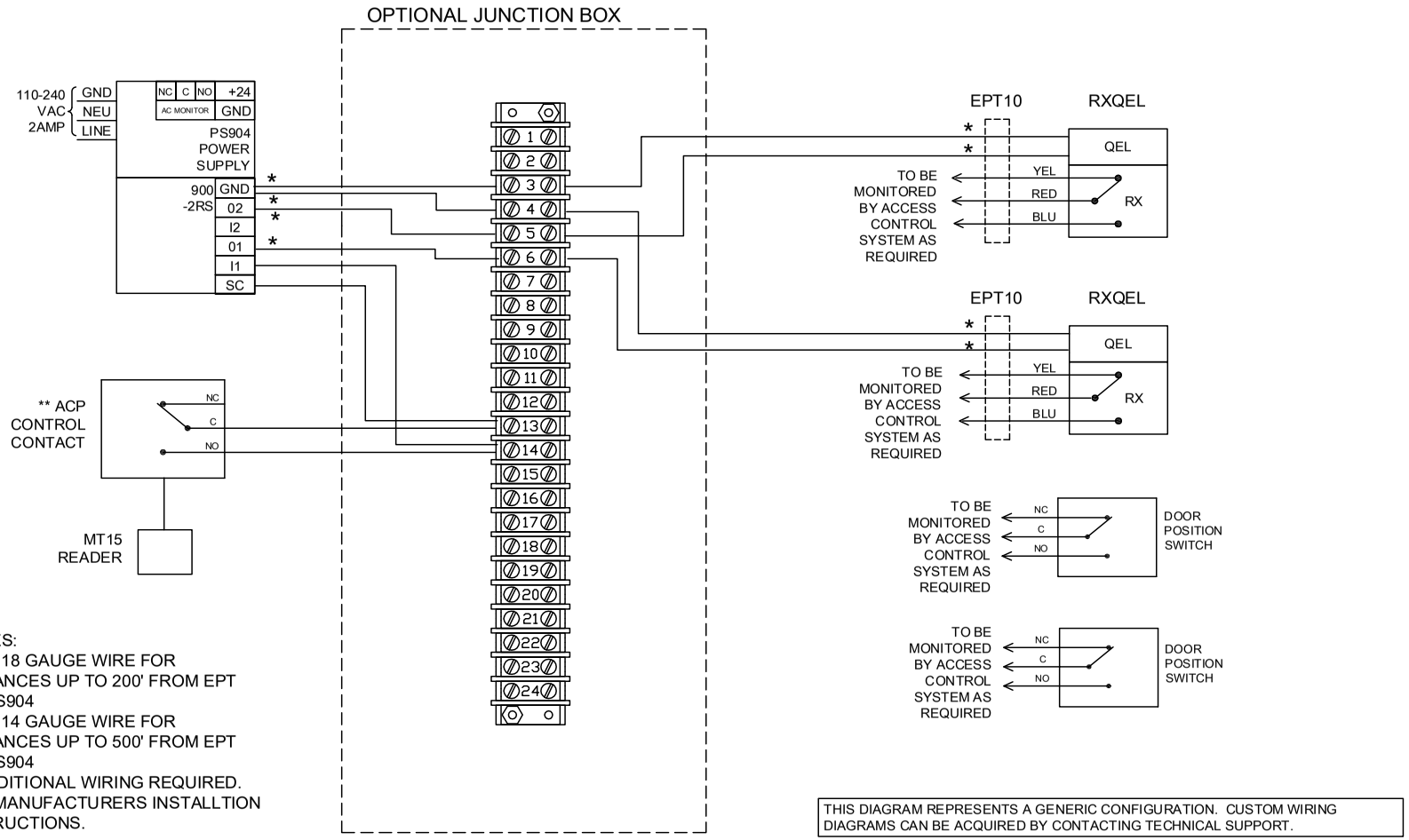

NOTES:
*USE 18 GAUGE WIRE FOR DISTANCES UP TO 200' FROM EPT TO PS904
*USE 14 GAUGE WIRE FOR DISTANCES UP TO 500' FROM EPT TO PS904
** ADDITIONAL WIRING REQUIRED. SEE MANUFACTURERS INSTALLTION INSTRUCTIONS.

THIS DIAGRAM REPRESENTS A GENERIC CONFIGURATION. CUSTOM WIRING DIAGRAMS CAN BE ACQUIRED BY CONTACTING TECHNICAL SUPPORT.

NOTES:
1) ALL LOW VOLTAGE WIRING TO BE STANDARD, MULTI-CONDUCTOR COLOR CODED WITHOUT SPLICES.

2) WIRING TO CONFORM TO APPLICABLE NATIONAL, STATE AND LOCAL ELECTRICAL CODES.

3) REFER TO SPECIFIC PRODUCT INSTALLATION INSTRUCTIONS FOR SPECIFIC WIRING REQUIREMENTS.

4) THIS DRAWING IS FOR GRAPHICAL REPRESENTATION OF PRODUCTS DETAILED IN THE HARDWARE SET ONLY.

5) ADDITIONAL WIRING WILL BE REQUIRED FROM ACP THAT IS NOT SHOWN HERE. CONSULT PROVIDER FOR DETAILS.

HARDWARE USED:

1 - PS904-2RS
2 RX-QEL99
2 DOOR POSITION SWITCHES
1 MT15 READER & ACP
2 EPT10
1 OPTIONAL JUNCTION BOX

TYPE
DOUBLE DOORS

OPERATION:
DOOR NORMALLY CLOSED & LATCHED BY ACCESS CONTROL SYSTEM.

VALID CREDENTIAL RETRACTS QUIET ELECTRIC PANIC DEVICES TO ALLOW ENTRY.

FREE EGRESS AT ALL TIMES.

DOOR POSITION & RX SWITCHES TO BE MONITORED BY ACCESS CONTROL SYSTEM.

DATE DRAWN: 02-16-18
REVISION DATE: 02-16-18
DRAWN BY: B DOVE

ALLEGION™

TITLE: PS904-2RS WITH 2 RXQEL99 RIM, MT15, DPS

DRAWING TYPE: WIRING
DWG NO: 112131W
DRAWN/CHECKED BY: B DOVE
REV A

THIS DIAGRAM REPRESENTS A GENERIC CONFIGURATION. CUSTOM WIRING DIAGRAMS CAN BE ACQUIRED BY CONTACTING TECHNICAL SUPPORT.

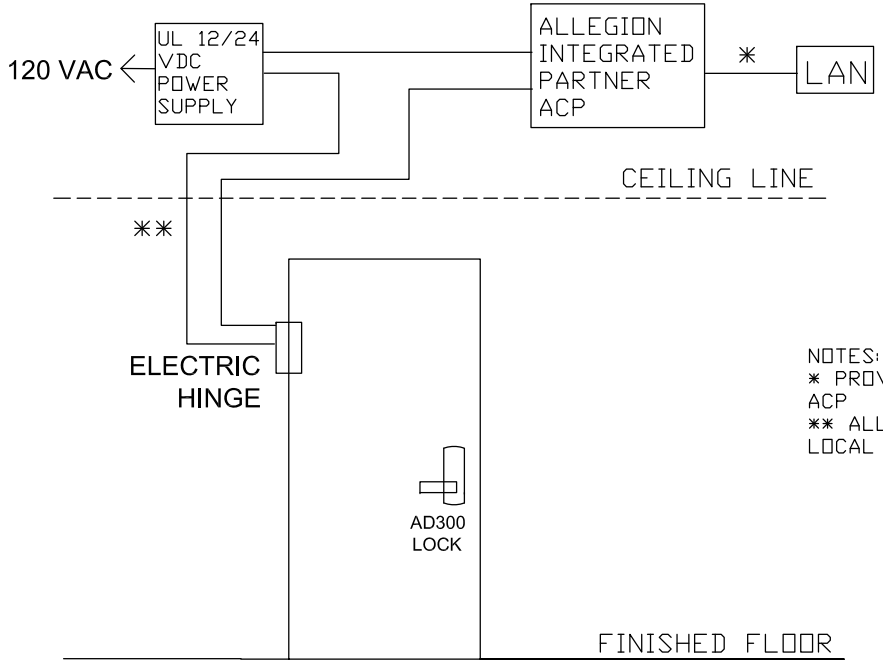

NOTES:
* PROVIDE NETWORK CONNECTION AS REQUIRED BY ACP
** ALL WIRING MUST COMPLY WITH NFPA70 (NEC) & LOCAL CODES & MEET ACP PROVIDER REQUIREMENTS.

NOTES:
1) ALL LOW VOLTAGE WIRING TO BE STANDARD, MULTI-CONDUCTOR COLOR CODED WITHOUT SPLICES.

2) WIRING TO CONFORM TO APPLICABLE NATIONAL, STATE AND LOCAL ELECTRICAL CODES.

3) REFER TO SPECIFIC PRODUCT INSTALLATION INSTRUCTIONS FOR SPESCIFIC WIRING REQUIREMENTS.

4) THIS DRAWING IS FOR GRAPHICAL REPRESENTATION OF PRODUCTS DETAILED IN THE HARDWARE SET ONLY.

5) ADDITIONAL WIRING WILL BE REQUIRED FROM ACP THAT IS NOT SHOWN HERE. CONSULT PROVIDER FOR DETAILS.

HARDWARE USED:
1 SCHLAGE AD-300 LOCK

1 ELECTRIC HINGE

1 UL LISTED 12/24 VDC POWER SUPPLY

1 ALLEGION AD LOCK INTEGRATED PARTNER ACP

TYPE
SINGLE DOOR
AD-300 RS485

OPERATION:

DOOR NORMALLY CLOSED & LOCKED

VALID CREDENTIAL UNLOCKS DOOR.

FREE GRESS AT ALL TIMES.

CONSULT ACCESS CONTROL SYSTEM PROVIDER FOR SPECIFIC READER CAPACITY AND POINT-TO-POINT WIRING PER ACP.

DATE DRAWN: 4-3-13
REVISION DATE: 5-9-2014

copyright 2013

ALLEGION™

TITLE:
SINGLE AD300 ALLEGION INTEGRATED PARTNER ACP RS485

DRAWING TYPE:
RISER DIAGRAM

DWG NO: 105349
DRAWN/CHECKED BY: B DOVE

REV
C

THIS DIAGRAM REPRESENTS A GENERIC CONFIGURATION. CUSTOM WIRING DIAGRAMS CAN BE ACQUIRED BY CONTACTING TECHNICAL SUPPORT.

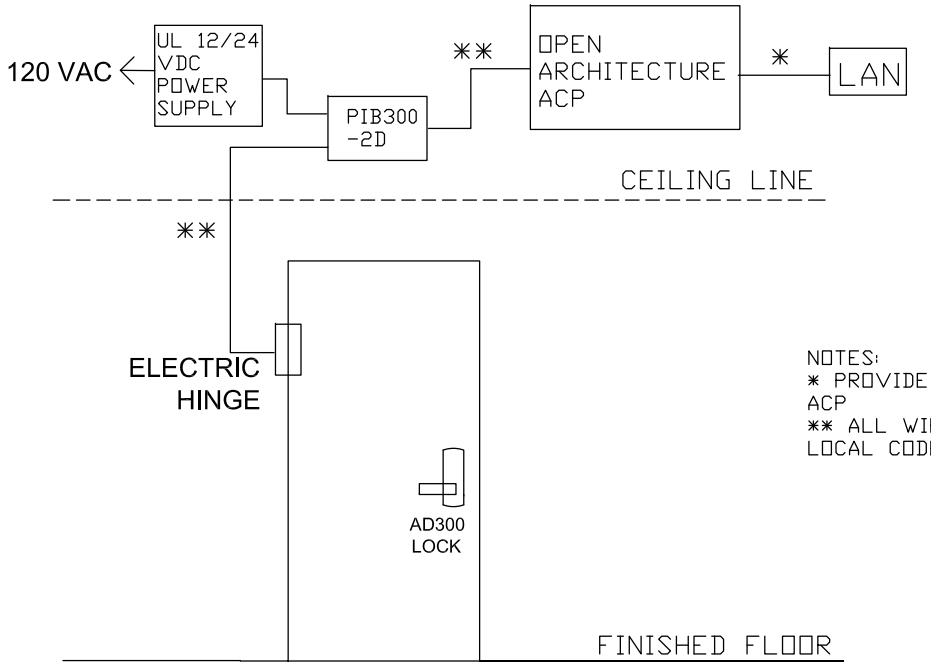

NOTES:
* PROVIDE NETWORK CONNECTION AS REQUIRED BY ACP
** ALL WIRING MUST COMPLY WITH NFPA70 (NEC) & LOCAL CODES & MEET ACP PROVIDER REQUIREMENTS.

NOTES:
1) ALL LOW VOLTAGE WIRING TO BE STANDARD, MULTI-CONDUCTOR COLOR CODED WITHOUT SPLICES.

2) WIRING TO CONFORM TO APPLICABLE NATIONAL, STATE AND LOCAL ELECTRICAL CODES.

3) REFER TO SPECIFIC PRODUCT INSTALLATION INSTRUCTIONS FOR SPESCIFIC WIRING REQUIREMENTS.

4) THIS DRAWING IS FOR GRAPHICAL REPRESENTATION OF PRODUCTS DETAILED IN THE HARDWARE SET ONLY.

5) ADDITIONAL WIRING WILL BE REQUIRED FROM ACP THAT IS NOT SHOWN HERE. CONSULT PROVIDER FOR DETAILS.

HARDWARE USED:
1 SCHLAGE AD-300 LOCK
1 ELECTRIC HINGE
1 PIB300-2D
1 UL LISTED 12/24 VDC POWER SUPPLY
1 OPEN ARCHITECTURE ACP

TYPE SINGLE DOOR AD-300 WIEGAND

OPERATION:

DOOR NORMALLY CLOSED & LOCKED

VALID CREDENTIAL UNLOCKS DOOR.

FREE GRESS AT ALL TIMES.

CONSULT ACCESS CONTROL SYSTEM PROVIDER FOR SPECIFIC READER CAPACITY AND POINT-TO-POINT WIRING PER ACP.

DATE DRAWN: 4-3-13
REVISION DATE: 5-9-2014

copyright 2013

ALLEGION™

TITLE: SINGLE AD300 OPEN ARCHITECTURE ACP WIEGAND

DRAWING TYPE: RISER DIAGRAM

DWG NO: 105348

DRAWN/CHECKED BY: B DOVE

REV C

THIS DIAGRAM REPRESENTS A GENERIC CONFIGURATION. CUSTOM WIRING DIAGRAMS CAN BE ACQUIRED BY CONTACTING TECHNICAL SUPPORT.

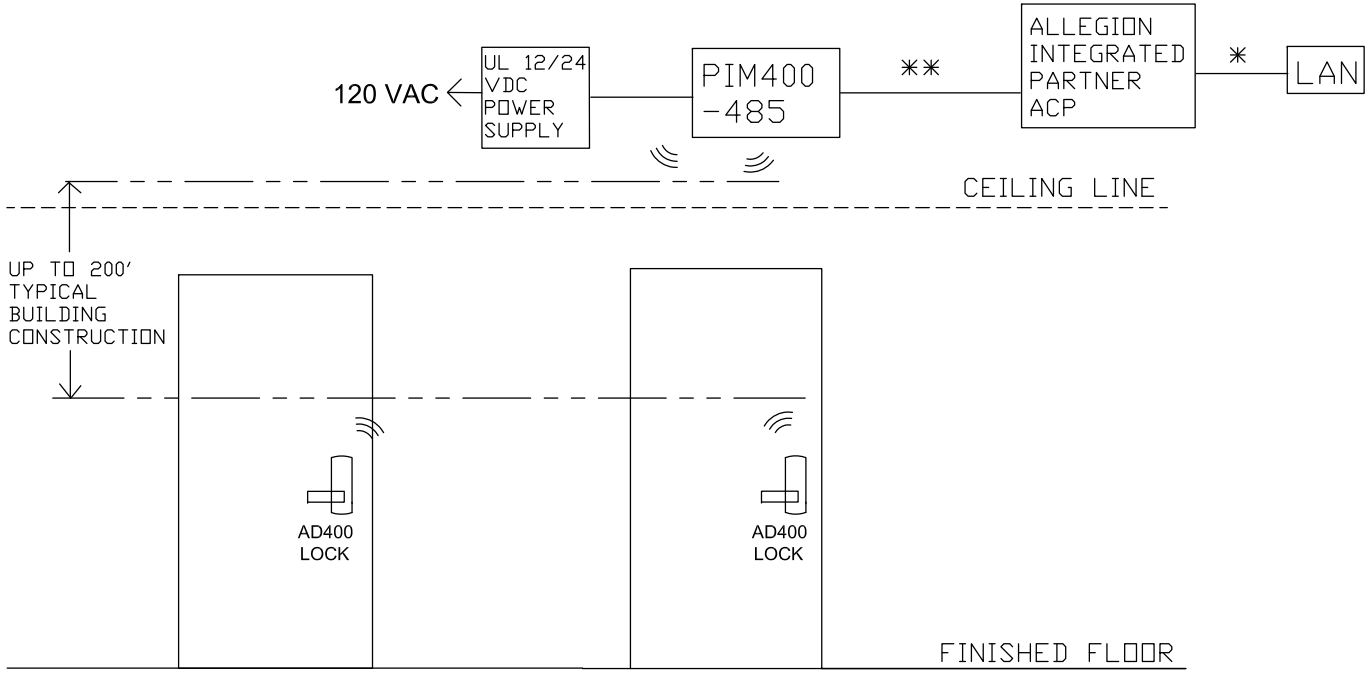

NOTES:
* PROVIDE NETWORK CONNECTION AS REQUIRED BY ACP
** ALL WIRING MUST COMPLY WITH NFPA70 (NEC) & LOCAL CODES & MEET ACP PROVIDER REQUIREMENTS.

NOTES:
1) ALL LOW VOLTAGE WIRING TO BE STANDARD, MULTI-CONDUCTOR COLOR CODED WITHOUT SPLICES.

2) WIRING TO CONFORM TO APPLICABLE NATIONAL, STATE AND LOCAL ELECTRICAL CODES.

3) REFER TO SPECIFIC PRODUCT INSTALLATION INSTRUCTIONS FOR SPESCIFIC WIRING REQUIREMENTS.

4) THIS DRAWING IS FOR GRAPHICAL REPRESENTATION OF PRODUCTS DETAILED IN THE HARDWARE SET ONLY.

5) ADDITIONAL WIRING WILL BE REQUIRED FROM ACP THAT IS NOT SHOWN HERE. CONSULT PROVIDER FOR DETAILS.

HARDWARE USED:
UP TO 16 SCHLAGE AD-400 DEVICES

1 UL LISTED 12/24 VDC POWER SUPPLY

1 PIM400-485

1 ALLEGION AD LOCK INTEGRATED PARTNER ACP

TYPE: AD-400 INTEGRATED RS485 ACP

OPERATION:

DOOR NORMALLY CLOSED & LOCKED
VALID CREDENTIAL UNLOCKS DOOR.
FREE EGRESS AT ALL TIMES.
EACH PIM400-485 CAN SUPPORT UP TO SIXTEEN AD-400 DEVICES.
CONSULT ACCESS CONTROL SYSTEM PROVIDER FOR SPECIFIC READER CAPACITY AND POINT-TO-POINT WIRING PER ACP.

DATE DRAWN: 4-3-13
REVISION DATE: 5-9-14

copyright 2013

ALLEGION™

TITLE: AD400 ALLEGION INTEGRATED PARTNER ACP RS485

DRAWING TYPE: RISER DIAGRAM

DWG NO: 105351

DRAWN/CHECKED BY: B DOVE

REV C

THIS DIAGRAM REPRESENTS A GENERIC CONFIGURATION. CUSTOM WIRING DIAGRAMS CAN BE ACQUIRED BY CONTACTING TECHNICAL SUPPORT.

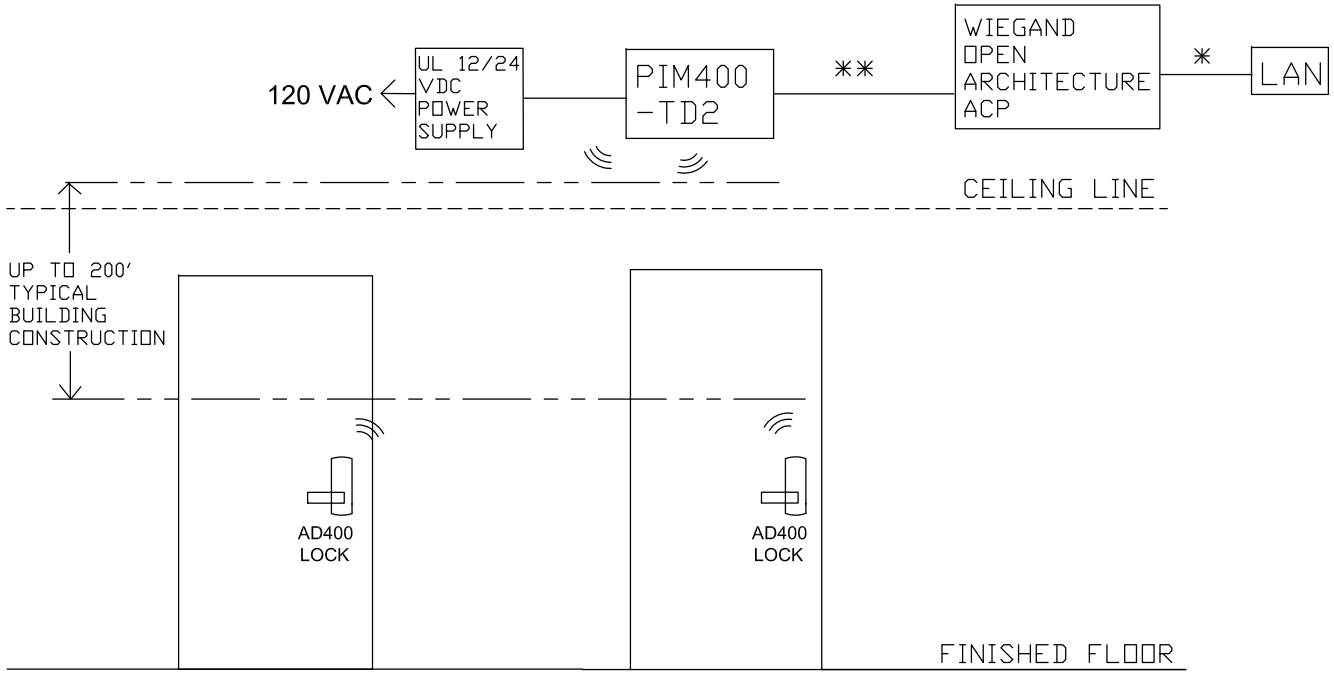

NOTES:
* PROVIDE NETWORK CONNECTION AS REQUIRED BY ACP
** ALL WIRING MUST COMPLY WITH NFPA70 (NEC) & LOCAL CODES & MEET ACP PROVIDER REQUIREMENTS.

NOTES:
1) ALL LOW VOLTAGE WIRING TO BE STANDARD, MULTI-CONDUCTOR COLOR CODED WITHOUT SPLICES.

2) WIRING TO CONFORM TO APPLICABLE NATIONAL, STATE AND LOCAL ELECTRICAL CODES.

3) REFER TO SPECIFIC PRODUCT INSTALLATION INSTRUCTIONS FOR SPESCIFIC WIRING REQUIREMENTS.

4) THIS DRAWING IS FOR GRAPHICAL REPRESENTATION OF PRODUCTS DETAILED IN THE HARDWARE SET ONLY.

5) ADDITIONAL WIRING WILL BE REQUIRED FROM ACP THAT IS NOT SHOWN HERE. CONSULT PROVIDER FOR DETAILS.

HARDWARE USED:
UP TO 2 SCHLAGE AD-400 DEVICES

1 UL LISTED 12/24 VDC POWER SUPPLY

1 PIM400-TD2

1 OPEN ARCHITECTURE ACP

TYPE
AD-400 OPEN ARCHITECTURE

OPERATION:

DOOR NORMALLY CLOSED & LOCKED
VALID CREDENTIAL UNLOCKS DOOR.
FREE EGRESS AT ALL TIMES.
EACH PIM400-TD2 CAN SUPPORT UP TO 2 AD-400 DEVICES.
CONSULT ACCESS CONTROL SYSTEM PROVIDER FOR SPECIFIC READER CAPACITY AND POINT-TO-POINT WIRING PER ACP.

DATE DRAWN: 4-3-13
REVISION DATE: 5-9-14

copyright 2013

ALLEGION™

TITLE: AD400 OPEN ARCHITECTURE ACP RS485

DRAWING TYPE: RISER DIAGRAM

DWG NO: 105350

DRAWN/CHECKED BY: B DOVE

REV C

THIS DIAGRAM REPRESENTS A GENERIC CONFIGURATION. CUSTOM WIRING DIAGRAMS CAN BE ACQUIRED BY CONTACTING TECHNICAL SUPPORT.

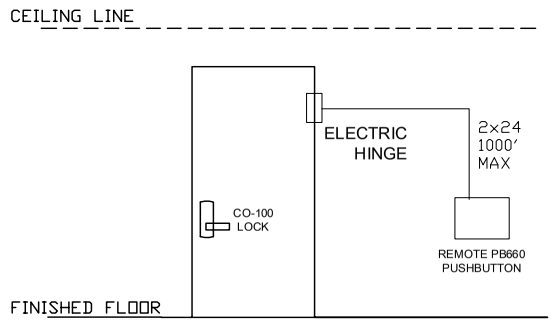

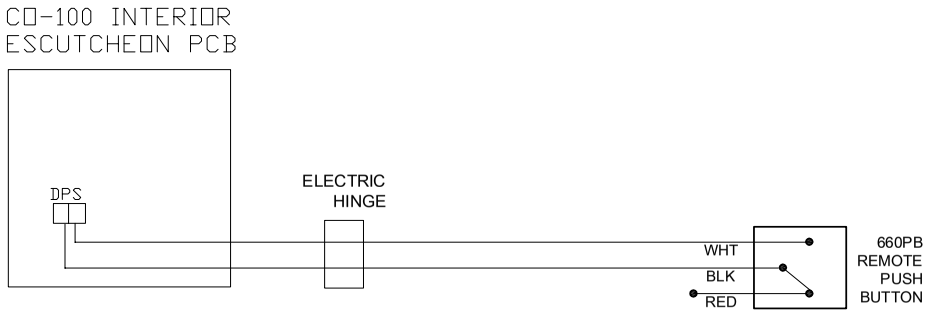

NOTES:
1) ALL LOW VOLTAGE WIRING TO BE STANDARD, MULTI-CONDUCTOR COLOR CODED WITHOUT SPLICES.

2) WIRING TO CONFORM TO APPLICABLE NATIONAL, STATE AND LOCAL ELECTRICAL CODES.

3) REFER TO SPECIFIC PRODUCT INSTALLATION INSTRUCTIONS FOR SPECIFIC WIRING REQUIREMENTS.

4) THIS DRAWING IS FOR GRAPHICAL REPRESENTATION OF PRODUCTS DETAILED IN THE HARDWARE SET ONLY.

5) ADDITIONAL WIRING WILL BE REQUIRED FROM ACP THAT IS NOT SHOWN HERE. CONSULT PROVIDER FOR DETAILS.

HARDWARE USED:

1 SCHLAGE CO-100 50 OFFICE FUNCTION STANDALONE LOCK MIN FW VERSION 2.6.2

1 ELECTRIC HINGE

1 PB660 REMOTE PUSHBUTTON

TYPE: CO100 WITH REMOTE PUSHBUTTON

OPERATION:

DOOR NORMALLY CLOSED & LOCKED

VALID PIN UNLOCKS DOOR. REMOTE PUSHBUTTON RELEASES DOOR FOR THE PRE-PROGRAMMED RELOCK DELAY.

FREE GRESS AT ALL TIMES.

DATE DRAWN: 02-13-18

REVISION DATE: 02-13-18

ALLEGION™

TITLE: CO100 WITH REMOTE PUSHBUTTON

DRAWING TYPE: RISER DIAGRAM

DWG NO: 112121

DRAWN/CHECKED BY: B DOVE

REV: A

THIS DIAGRAM REPRESENTS A GENERIC CONFIGURATION. CUSTOM WIRING DIAGRAMS CAN BE ACQUIRED BY CONTACTING TECHNICAL SUPPORT.

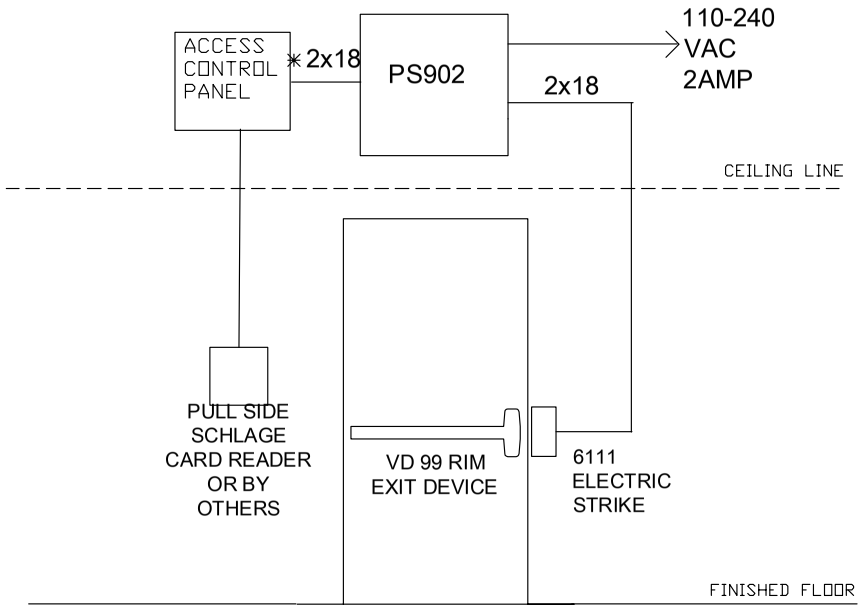

NOTE:
*ADDITIONAL WIRING IS REQUIRED. SEE MANUFACTURER INSTALLATION INSTRUCTION

NOTES:
1) ALL LOW VOLTAGE WIRING TO BE STANDARD, MULTI-CONDUCTOR COLOR CODED WITHOUT SPLICES.

2) WIRING TO CONFORM TO APPLICABLE NATIONAL, STATE AND LOCAL ELECTRICAL CODES.

3) REFER TO SPECIFIC PRODUCT INSTALLATION INSTRUCTIONS FOR SPECIFIC WIRING REQUIREMENTS.

4) THIS DRAWING IS FOR GRAPHICAL REPRESENTATION OF PRODUCTS DETAILED IN THE HARDWARE SET ONLY.

5) * CONDUCTOR COUNT TO BE DETERMINED BY ACCESS CONTROL PANEL PROVIDER.

HARDWARE USED:

6111 FSE 24VDC Electric Strike

VD 99 Rim Exit device

PS902 Power Supply

Schlage or Card Reader By Others with Access Control Panel

TYPE 6111 FSE ESTRIKE WITH SCHLAGE OR CR BO

OPERATION:
OPERATION:
PULL SIDE CARD READER TO UNLOCK ELECTRIC STRIKE TO ALLOW ENTRY.

6111 FSE ESTRIKE WILL LOCK ON POWER OUTAGE.

FREE EGRESS ALWAYS FROM PUSH SIDE OF 99 RIM EXIT DEVICE

IN THIS EXAMPLE ALL WIRING CONNECTIONS ARE MADE IN THE PS902 ENCLOSURE.

DATE DRAWN: 3-13-13 | REVISION DATE: 3-13-13

ALLEGION™

TITLE: FSE 6111 WITH PS902 AND SCHLAGE OR CARD READER BY OTHERS

DRAWING TYPE: RISER DIAGRAM

DWG NO: 109439

DRAWN/CHECKED BY: B DOVE/ B DYE

REV C

THIS DIAGRAM REPRESENTS A GENERIC CONFIGURATION. CUSTOM WIRING DIAGRAMS CAN BE ACQUIRED BY CONTACTING TECHNICAL SUPPORT.

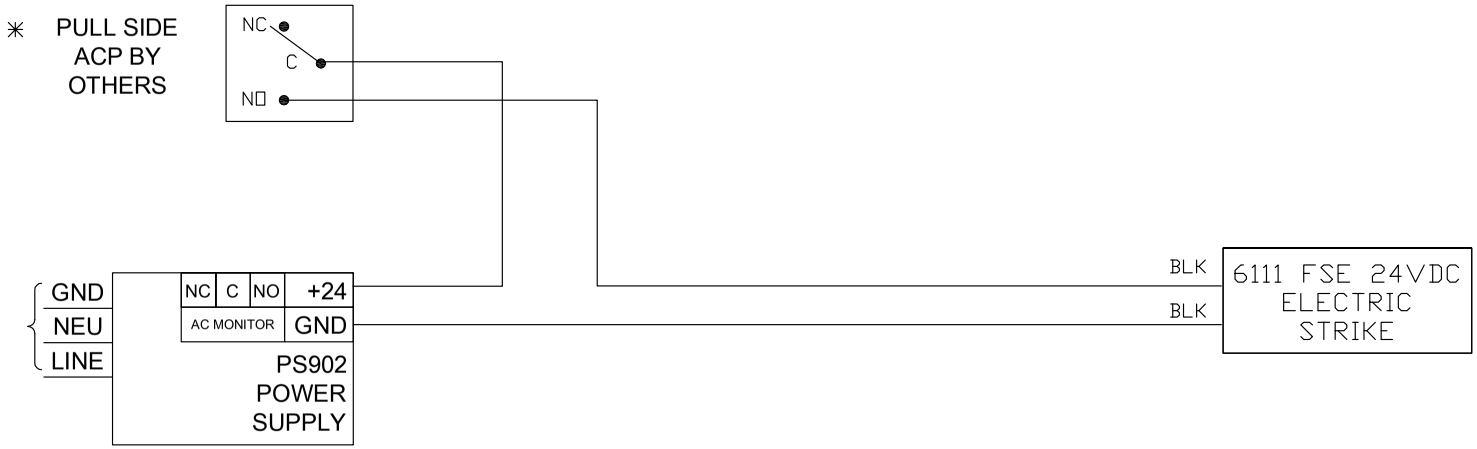

NOTE:
✳ADDITIONAL WIRING IS REQUIRED. SEE MANUFACTURER INSTALLATION INSTRUCTION

NOTES:
1) ALL LOW VOLTAGE WIRING TO BE STANDARD, MULTI-CONDUCTOR COLOR CODED WITHOUT SPLICES.

2) WIRING TO CONFORM TO APPLICABLE NATIONAL, STATE AND LOCAL ELECTRICAL CODES.

3) REFER TO SPECIFIC PRODUCT INSTALLATION INSTRUCTIONS FOR SPECIFIC WIRING REQUIREMENTS.

4) THIS DRAWING IS FOR GRAPHICAL REPRESENTATION OF PRODUCTS DETAILED IN THE HARDWARE SET ONLY.

5) ✳ CONDUCTOR COUNT TO BE DETERMINED BY ACCESS CONTROL PANEL PROVIDER.

HARDWARE USED:

6111 FSE 24VDC Electric Strike

VD 99 Rim Exit device

PS902 Power Supply

Schlage or Card Reader By Others with Access Control Panel

TYPE
6111 FSE ESTRIKE WITH SCHLAGE OR CR BO

OPERATION:
PULL SIDE SCHLAGE OR CARD READER BY OTHERS TO UNLOCK ELECTRIC STRIKE TO ALLOW ENTRY.

6111 FSE ESTRIKE WILL LOCK ON POWER OUTAGE.

FREE EGRESS ALWAYS FROM PUSH SIDE OF 99 RIM EXIT DEVICE

IN THIS EXAMPLE ALL WIRING CONNECTIONS ARE MADE IN THE PS902 ENCLOSURE.

DATE DRAWN: 3-13-13

REVISION DATE: 3-13-13

ALLEGION™

TITLE:
FSE 6111 WITH PS902 AND SCHLAGE OR CARD READER BY OTHERS

DRAWING TYPE:
WIRING DIAGRAM

DWG NO: 109439

DRAWN/CHECKED BY:
B DOVE/ B DYE

REV
C

THIS DIAGRAM REPRESENTS A GENERIC CONFIGURATION. CUSTOM WIRING DIAGRAMS CAN BE ACQUIRED BY CONTACTING TECHNICAL SUPPORT.

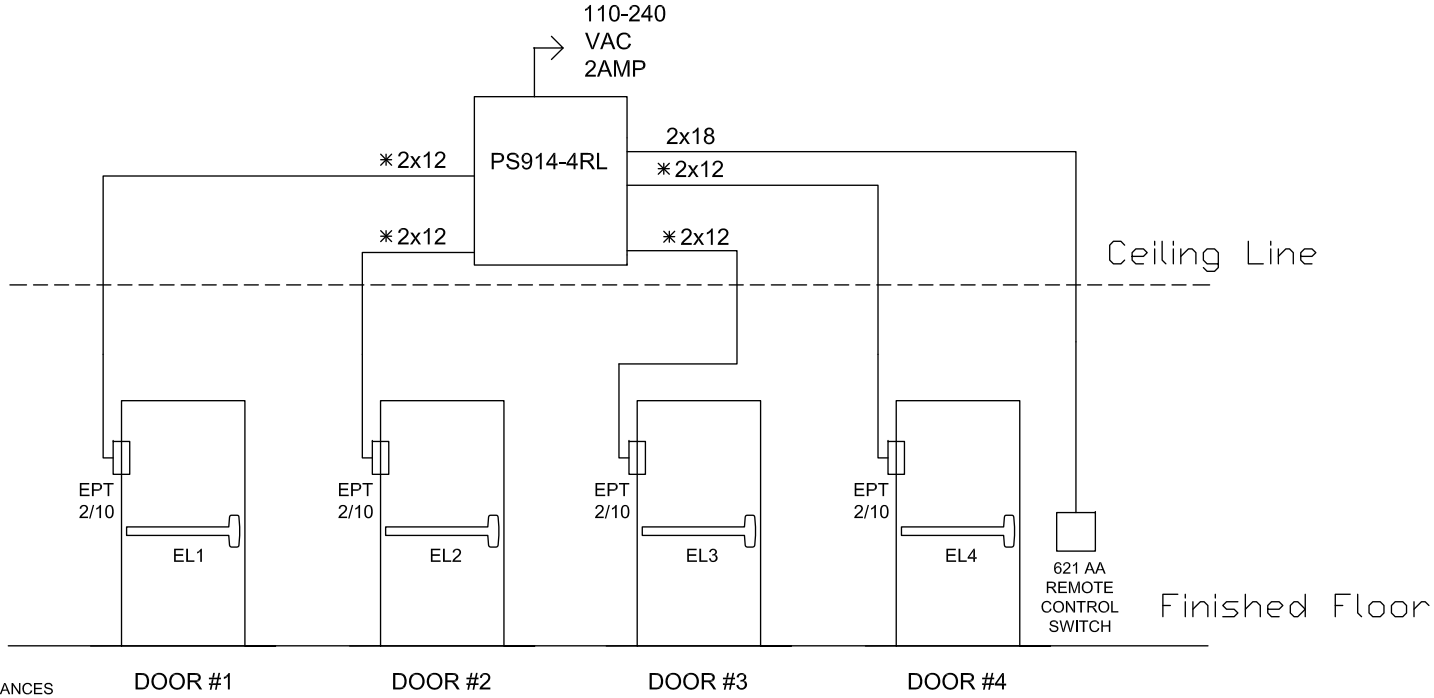

NOTE:
∗USE #12 GAUGE WIRE FOR DISTANCES UP TO 200' FROM EPT TO PS914
∗USE #14 GAUGE WIRE FOR DISTANCES UP TO 100' FROM EPT TO PS914

NOTES:
1) ALL LOW VOLTAGE WIRING TO BE STANDARD, MULTI-CONDUCTOR COLOR CODED WITHOUT SPLICES.

2) WIRING TO CONFORM TO APPLICABLE NATIONAL, STATE AND LOCAL ELECTRICAL CODES.

3) REFER TO SPECIFIC PRODUCT INSTALLATION INSTRUCTIONS FOR SPESCIFIC WIRING REQUIREMENTS.

4) THIS DRAWING IS FOR GRAPHICAL REPRESENTATION OF PRODUCTS DETAILED IN THE HARDWARE SET ONLY.

5) ∗ CONDUCTOR COUNT TO BE DETERMINED BY ACCESS CONTROL PANEL PROVIDER.

HARDWARE USED:

4 VON DUPRIN OR FALCON EL PANIC DEVICES

1 PS914-4RL POWER SUPPLY

4 EPT POWER TRANSFERS

621 AA REMOTE CONTROL PUSH BUTTON

TYPE
REMOTE 621AA PB WITH 4 ALLEGION EL DEVICES

OPERATION:
REMOTE CONTROL 621 AA PB TO SIGNAL ALL FOUR ELECTRIC PANIC BARS TO RETRACT FOR ENTRY.

THIS CONFIGURATION REPRESENTS A NON FIRE RATED OPENING.

IN THIS EXAMPLE ALL WIRING CONNECTIONS ARE MADE IN PS914 ENCLOSURE.

DATE DRAWN: 3-20-13
REVISION DATE: 3-14-14

copyright 2013

ALLEGION™

TITLE:
REMOTE 621AA PB WITH 4 ALLEGION EL PANICS

DRAWING TYPE:
RISER DIAGRAM

DWG NO: 109440

DRAWN/CHECKED BY:
B DOVE/ B DYE

REV
C

THIS DIAGRAM REPRESENTS A GENERIC CONFIGURATION. CUSTOM WIRING DIAGRAMS CAN BE ACQUIRED BY CONTACTING TECHNICAL SUPPORT.

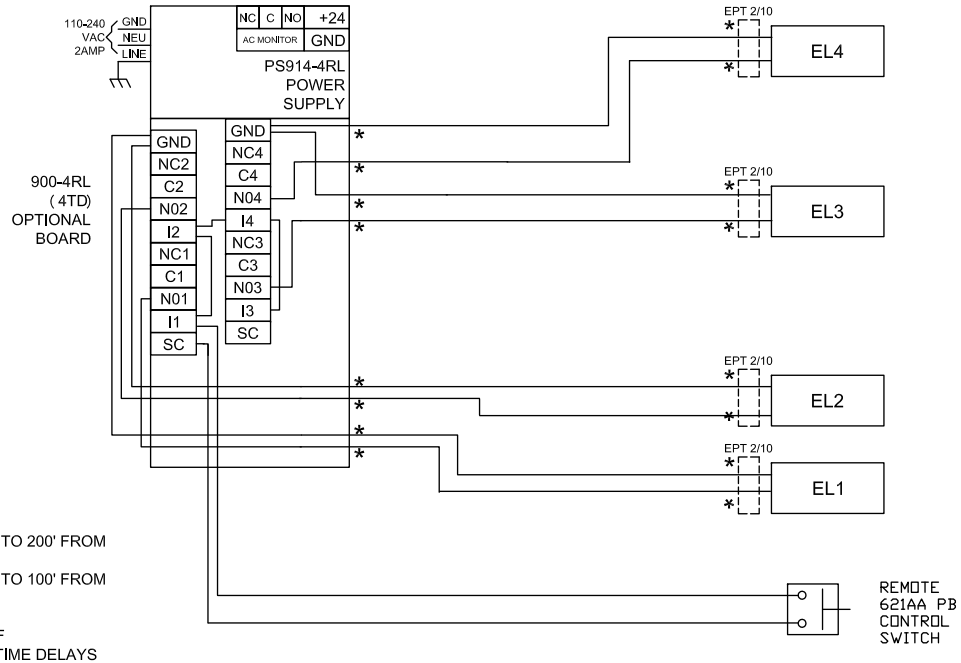

NOTE:
*USE #12 GAUGE WIRE FOR DISTANCES UP TO 200' FROM EPT TO PS914
*USE #14 GAUGE WIRE FOR DISTANCES UP TO 100' FROM EPT TO PS914

900-4RL CARD SW2 SET SWITCH 1 AND 2 OFF
900-4RL CARD SW1 SET AS REQUIRED FOR TIME DELAYS
- SEE INSTRUCTION SHEET FOR DETAILS

NOTES:
1) ALL LOW VOLTAGE WIRING TO BE STANDARD, MULTI-CONDUCTOR COLOR CODED WITHOUT SPLICES.

2) WIRING TO CONFORM TO APPLICABLE NATIONAL, STATE AND LOCAL ELECTRICAL CODES.

3) REFER TO SPECIFIC PRODUCT INSTALLATION INSTRUCTIONS FOR SPESCIFIC WIRING REQUIREMENTS.

4) THIS DRAWING IS FOR GRAPHICAL REPRESENTATION OF PRODUCTS DETAILED IN THE HARDWARE SET ONLY.

5) * CONDUCTOR COUNT TO BE DETERMINED BY ACCESS CONTROL PANEL PROVIDER.

HARDWARE USED:

4 VON DUPRIN OR FALCON EL PANIC DEVICES

1 PS914-4RL POWER SUPPLY

4 EPT POWER TRANSFERS

621 AA REMOTE CONTROL SWITCH

TYPE
REMOTE 621AA PB WITH 4 ALLEGION EL DEVICES

OPERATION:
REMOTE CONTROL 621AA PB TO SIGNAL ALL FOUR ELECTRIC PANIC BARS TO RETRACT FOR ENTRY.

THIS CONFIGURATION REPRESENTS A NON FIRE RATED OPENING.

IN THIS EXAMPLE ALL WIRING CONNECTIONS ARE MADE IN PS914 ENCLOSURE.

DATE DRAWN: 3-20-13
REVISION DATE: 3-14-14

copyright 2013

ALLEGION™

TITLE: REMOTE 621AA PB WITH 4 ALLEGION EL PANICS

DRAWING TYPE: WIRING DIAGRAM

DWG NO: 109440

DRAWN/CHECKED BY: B DOVE/ B DYE

REV C

THIS DIAGRAM REPRESENTS A GENERIC CONFIGURATION. CUSTOM WIRING DIAGRAMS CAN BE ACQUIRED BY CONTACTING TECHNICAL SUPPORT.

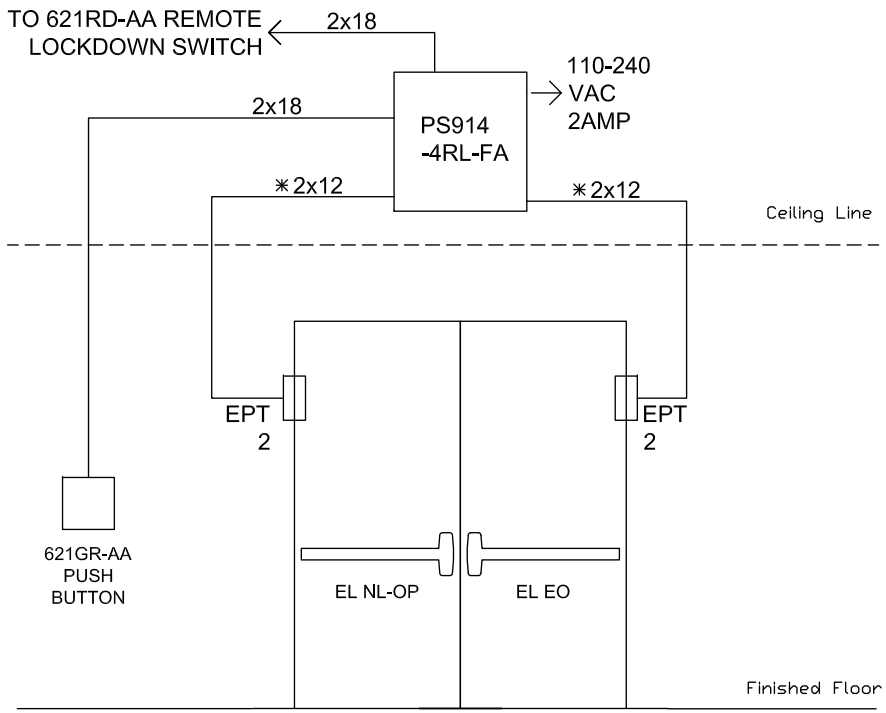

NOTES:
1) ALL LOW VOLTAGE WIRING TO BE STANDARD, MULTI-CONDUCTOR COLOR CODED WITHOUT SPLICES.

2) WIRING TO CONFORM TO APPLICABLE NATIONAL, STATE AND LOCAL ELECTRICAL CODES.

3) REFER TO SPECIFIC PRODUCT INSTALLATION INSTRUCTIONS FOR SPESCIFIC WIRING REQUIREMENTS.

4) THIS DRAWING IS FOR GRAPHICAL REPRESENTATION OF PRODUCTS DETAILED IN THE HARDWARE SET ONLY.

HARDWARE USED:

2 VONDUPRIN OR FALCON EL PANIC DEVICES

1 621GR-AA PUSH BUTTON

1 621RD-AA PUSH BUTTON

1 PS914-4RL-FA POWER SUPPLY

TYPE EMERGENCY RELEASE OF ALLEGION EL PANIC DEVICES

OPERATION:

EL LATCHES HELD SIGNALED TO RETRACT BY 621GR-AA PUSH BUTTON.

IN THE EVENT OF AN EMERGENCY PRESSING 621RD REMOTE PUSH BUTTON WILL CAUSE EL LATCHES TO EXTEND SECURING DOOR FROM PULL SIDE.

THIS EXAMPLE IS FOR A NON FIRE RATED APPLICATION.

IN THIS EXAMPLE ALL CONNECTIONS ARE MADE IN PS914 ENCLOSURE.

DATE DRAWN: 3-21-13

REVISION DATE: 3-14-14

copyright 2013

ALLEGION™

TITLE: PS914-4RL-FA EL PAIR EMERGENCY RELEASE

DRAWING TYPE: RISER DIAGRAM

DWG NO: 109444

DRAWN/CHECKED BY: BRENDA DOVE

REV C

THIS DIAGRAM REPRESENTS A GENERIC CONFIGURATION. CUSTOM WIRING DIAGRAMS CAN BE ACQUIRED BY CONTACTING TECHNICAL SUPPORT.

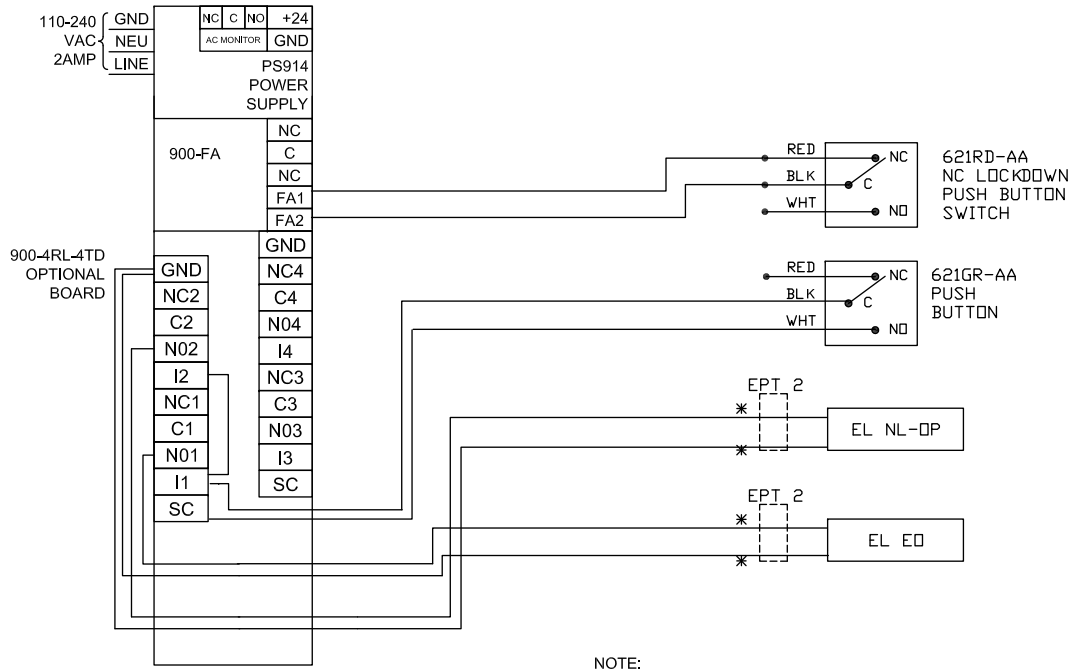

NOTE:
*USE #12 GAUGE WIRE FOR DISTANCES UP TO 200' FROM EPT TO PS914
*USE #14 GAUGE WIRE FOR DISTANCES UP TO 100' FROM EPT TO PS914

NOTES:
1) ALL LOW VOLTAGE WIRING TO BE STANDARD, MULTI-CONDUCTOR COLOR CODED WITHOUT SPLICES.

2) WIRING TO CONFORM TO APPLICABLE NATIONAL, STATE AND LOCAL ELECTRICAL CODES.

3) REFER TO SPECIFIC PRODUCT INSTALLATION INSTRUCTIONS FOR SPESCIFIC WIRING REQUIREMENTS.

4) THIS DRAWING IS FOR GRAPHICAL REPRESENTATION OF PRODUCTS DETAILED IN THE HARDWARE SET ONLY.

HARDWARE USED:

2 VONDUPRIN OR FALCON EL PANIC DEVICES

1 621GR-AA PUSH BUTTON

1 621RD-AA PUSH BUTTON

1 PS914-4RL-FA POWER SUPPLY

TYPE
EMERGENCY RELEASE OF ALLEGION EL PANIC DEVICES

OPERATION:

EL LATCHES HELD SIGNALED TO RETRACT BY 621GR-AA PUSH BUTTON.

IN THE EVENT OF AN EMERGENCY PRESSING 621RD REMOTE PUSH BUTTON WILL CAUSE EL LATCHES TO EXTEND SECURING DOOR FROM PULL SIDE.

THIS EXAMPLE IS FOR A NON FIRE RATED APPLICATION.

IN THIS EXAMPLE ALL CONNECTIONS ARE MADE IN PS914 ENCLOSURE.

DATE DRAWN: 3-21-13

REVISION DATE: 3-14-14

copyright 2013

ALLEGION™

TITLE: PS914-4RL-FA EL PAIR EMERGENCY RELEASE

DRAWING TYPE: WIRING DIAGRAM

DWG NO: 109444

DRAWN/CHECKED BY: B DOVE/

REV C

THIS DIAGRAM REPRESENTS A GENERIC CONFIGURATION. CUSTOM WIRING DIAGRAMS CAN BE ACQUIRED BY CONTACTING TECHNICAL SUPPORT.

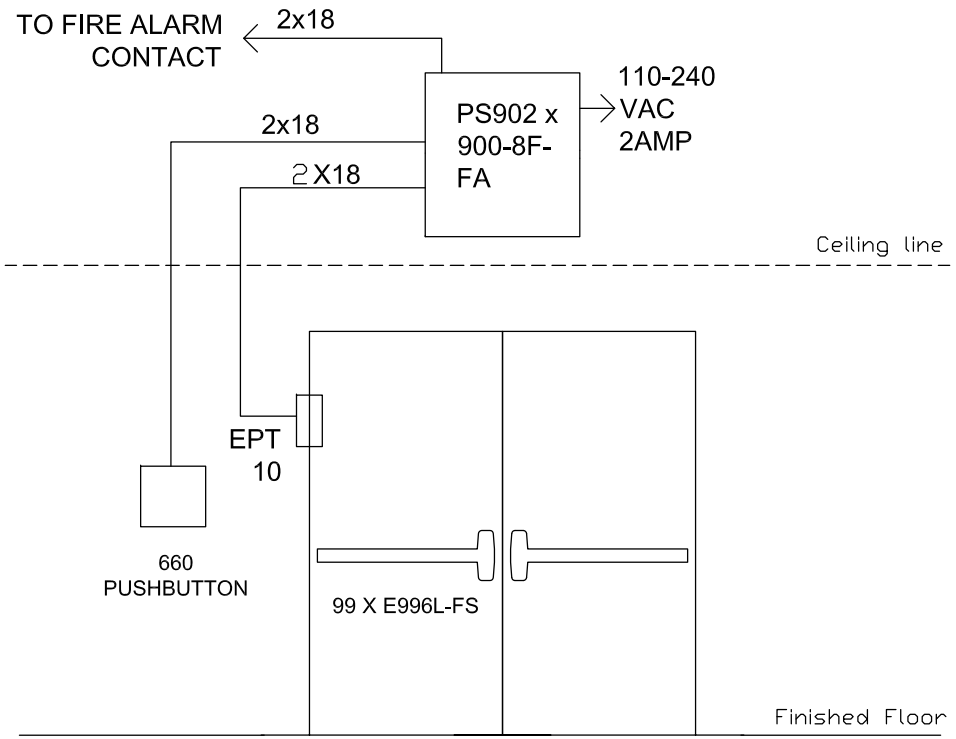

NOTES:
1) ALL LOW VOLTAGE WIRING TO BE STANDARD, MULTI-CONDUCTOR COLOR CODED WITHOUT SPLICES.

2) WIRING TO CONFORM TO APPLICABLE NATIONAL, STATE AND LOCAL ELECTRICAL CODES.

3) REFER TO SPECIFIC PRODUCT INSTALLATION INSTRUCTIONS FOR SPESCIFIC WIRING REQUIREMENTS.

4) THIS DRAWING IS FOR GRAPHICAL REPRESENTATION OF PRODUCTS DETAILED IN THE HARDWARE SET ONLY.

5) ADDITIONAL WIRING WILL BE REQUIRED FROM ACP THAT IS NOT SHOWN HERE. CONSULT PROVIDER FOR DETAILS.

HARDWARE USED:

1 VD 99 x E996L FS 24VDC

1 PS902-8F-FA Power Supply

1 660 Pushbutton

Fire Alarm Contact by Others

TYPE
FS E996L WITH 660 PB AND FIRE ALARM RELEASE

OPERATION:

660 PUSHBUTTON TO RELEASE FAIL SAFE E996L FOR AUTHORIZED ENTRY.

FIRE ALARM CONTACT TO RELEASE THE ELECTRIC TRIM TO ALLOW ENTRY.

IN THIS EXAMPLE ALL WIRING CONNECTIONS ARE MADE IN PS902 ENCLOSURE.

DATE DRAWN: 3-21-13
REVISION DATE: 3-21-13

copyright 2013

ALLEGION™

TITLE:
FS E996L WITH PS902-8F-FA

DRAWING TYPE:
RISER DIAGRAM

DWG NO: 109445
DRAWN/CHECKED BY: B DOVE

REV
A

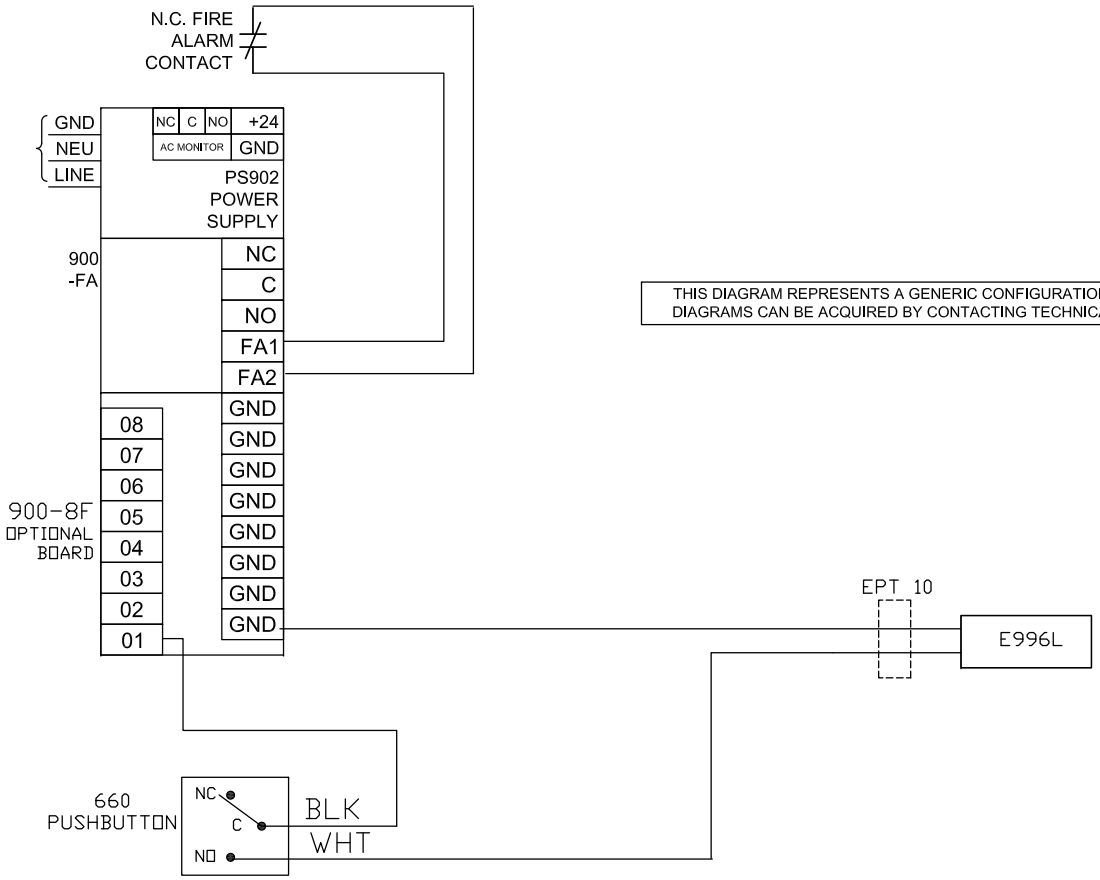

THIS DIAGRAM REPRESENTS A GENERIC CONFIGURATION. CUSTOM WIRING DIAGRAMS CAN BE ACQUIRED BY CONTACTING TECHNICAL SUPPORT.

NOTES:
1) ALL LOW VOLTAGE WIRING TO BE STANDARD, MULTI-CONDUCTOR COLOR CODED WITHOUT SPLICES.

2) WIRING TO CONFORM TO APPLICABLE NATIONAL, STATE AND LOCAL ELECTRICAL CODES.

3) REFER TO SPECIFIC PRODUCT INSTALLATION INSTRUCTIONS FOR SPESCIFIC WIRING REQUIREMENTS.

4) THIS DRAWING IS FOR GRAPHICAL REPRESENTATION OF PRODUCTS DETAILED IN THE HARDWARE SET ONLY.

5) ADDITIONAL WIRING WILL BE REQUIRED FROM ACP THAT IS NOT SHOWN HERE. CONSULT PROVIDER FOR DETAILS.

HARDWARE USED:

1 VD 99 x E996L FS 24VDC

1 PS902-8F-FA Power Supply

1 660 Pushbutton

Fire Alarm Contact by Others

TYPE

FS E996L WITH 660 PB AND FIRE ALARM RELEASE

OPERATION:

660 PUSHBUTTON TO RELEASE FAIL SAFE E996L FOR AUTHORIZED ENTRY.

FIRE ALARM CONTACT TO RELEASE THE ELECTRIC TRIM TO ALLOW ENTRY.

IN THIS EXAMPLE ALL WIRING CONNECTIONS ARE MADE IN PS902 ENCLOSURE.

DATE DRAWN: 3-21-13

REVISION DATE: 3-21-13

copyright 2013

ALLEGION™

TITLE:

FS E996L WITH PS902-8F-FA

DRAWING TYPE: WIRING DIAGRAM

DWG NO: 109445

DRAWN/CHECKED BY: B DOVE

REV A

THIS DIAGRAM REPRESENTS A GENERIC CONFIGURATION. CUSTOM WIRING DIAGRAMS CAN BE ACQUIRED BY CONTACTING TECHNICAL SUPPORT.

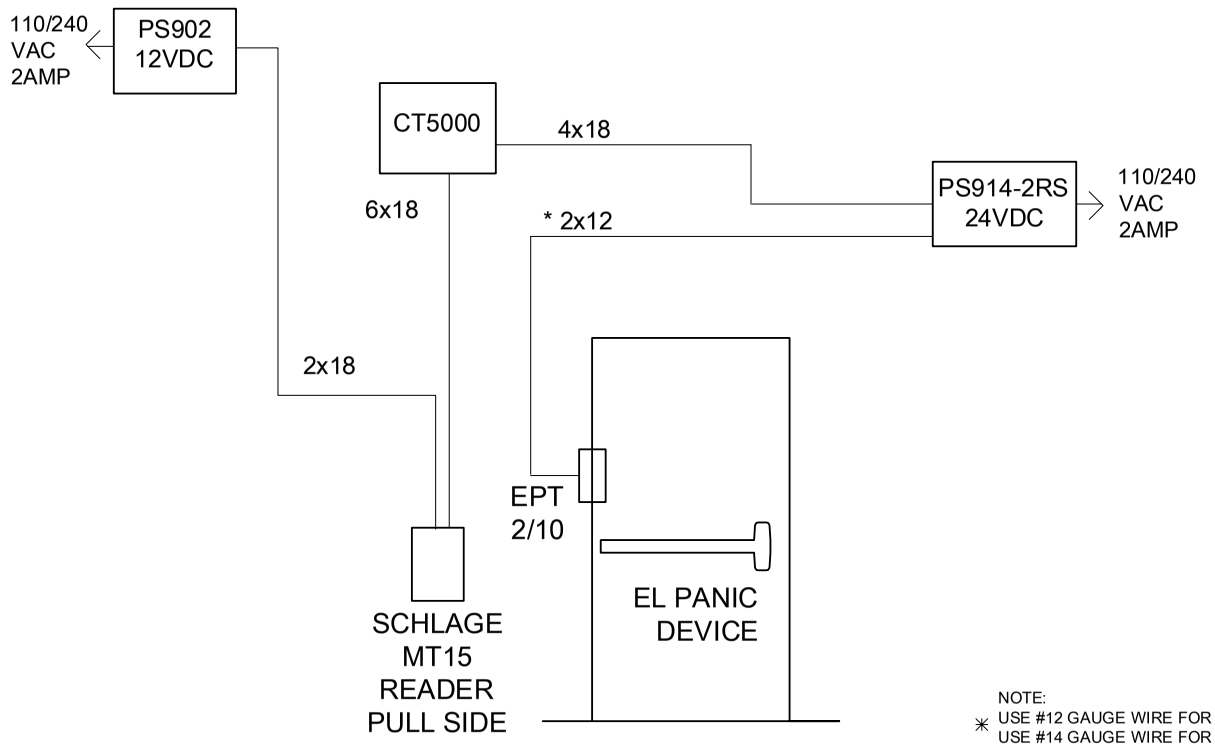

NOTE:
✳ USE #12 GAUGE WIRE FOR DISTANCES UP TO 200' FROM EPT TO PS914.
USE #14 GAUGE WIRE FOR DISTANCES UP TO 100' FROM EPT TO PS914.

NOTES:
1) ALL LOW VOLTAGE WIRING TO BE STANDARD, MULTI-CONDUCTOR COLOR CODED WITHOUT SPLICES.

2) WIRING TO CONFORM TO APPLICABLE NATIONAL, STATE AND LOCAL ELECTRICAL CODES.

3) REFER TO SPECIFIC PRODUCT INSTALLATION INSTRUCTIONS FOR SPECIFIC WIRING REQUIREMENTS.

4) THIS DRAWING IS FOR GRAPHICAL REPRESENTATION OF PRODUCTS DETAILED IN THE HARDWARE SET ONLY.

5) ✳ CONDUCTOR COUNT TO BE DETERMINED BY ACCESS CONTROL PANEL PROVIDER.

HARDWARE USED:
- 1 CT5000
- 1 MT15 SCHLAGE READER
- 1 VD OR FALCON EL PANIC
- 1 EPT2/10
- 1 PS902
- 1 PS914-2RS

TYPE ACCESS CONTROL WITH EL PANIC

OPERATION:
SCHLAGE MT15 READER TO RETRACT THE ELECTRIC LATCH ON PANIC BAR TO ALLOW ENTRY.

FREE EGRESS ALWAYS PERMITTED

THIS IS NOT A FIRE RATED APPLICATION

DATE DRAWN: 3-26-13

REVISION DATE: 07-03-17

ALLEGION™

TITLE: CT5000 WITH EL AND PS914-2RS AND PS902

DRAWING TYPE: RISER DIAGRAM

DWG NO: 109499

DRAWN/CHECKED BY: BRENDA DOVE

REV B

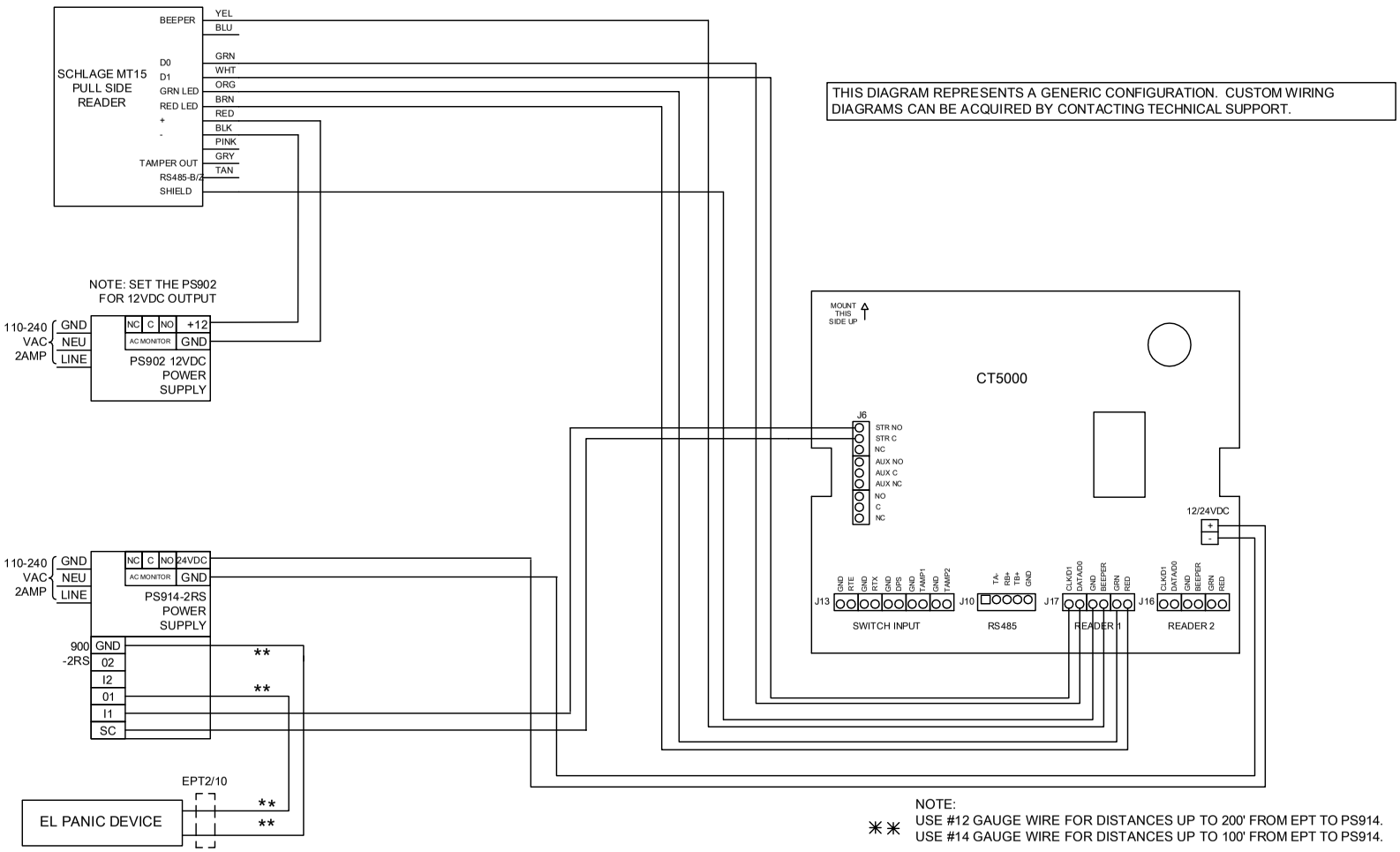

NOTES:
1) ALL LOW VOLTAGE WIRING TO BE STANDARD, MULTI-CONDUCTOR COLOR CODED WITHOUT SPLICES.

2) WIRING TO CONFORM TO APPLICABLE NATIONAL, STATE AND LOCAL ELECTRICAL CODES.

3) REFER TO SPECIFIC PRODUCT INSTALLATION INSTRUCTIONS FOR SPECIFIC WIRING REQUIREMENTS.

4) THIS DRAWING IS FOR GRAPHICAL REPRESENTATION OF PRODUCTS DETAILED IN THE HARDWARE SET ONLY.

5) ADDITIONAL WIRING WILL BE REQUIRED FROM ACP THAT IS NOT SHOWN HERE. CONSULT PROVIDER FOR DETAILS.

HARDWARE USED:
1 CT5000
1 MT15 SCHLAGE READER
1 VD OR FALCON EL PANIC DEVICE
1 EPT2/10
1 PS902
1 PS914-2RS

TYPE
ACCESS CONTROL WITH EL PANIC

OPERATION:

SCHLAGE MT15 READER TO RETRACT THE ELECTRIC LATCH ON PANIC BAR TO ALLOW ENTRY.

FREE EGRESS ALWAYS PERMITTED.

THIS IS NOT A FIRE RATED APPLICATION

DATE DRAWN: 3-26-13
REVISION DATE: 07-03-17

ALLEGION™

TITLE: CT5000 WITH EL AND PS914-2RS AND PS902

DRAWING TYPE: WIRING DIAGRAM
DWG NO: 109499
DRAWN/CHECKED BY: B DOVE
REV B

THIS DIAGRAM REPRESENTS A GENERIC CONFIGURATION. CUSTOM WIRING DIAGRAMS CAN BE ACQUIRED BY CONTACTING TECHNICAL SUPPORT.

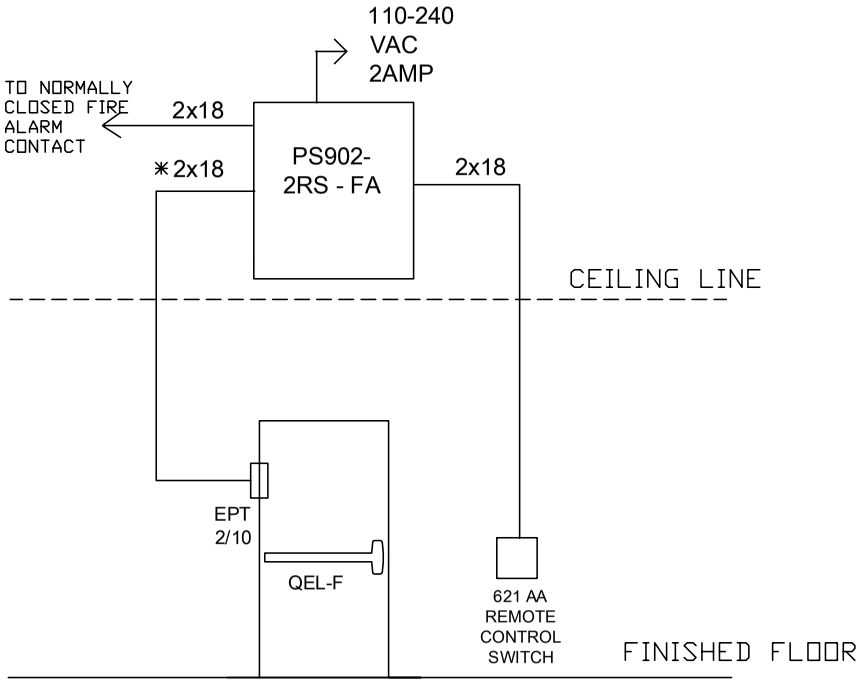

NOTE:
* USE #18 GAUGE WIRE FOR DISTANCES UP TO 200' FROM EPT TO PS902
* USE #14 GAUGE WIRE FOR DISTANCES UP TO 500' FROM EPT TO PS902

SET PS902 TO 24VDC

NOTES:
1) ALL LOW VOLTAGE WIRING TO BE STANDARD, MULTI-CONDUCTOR COLOR CODED WITHOUT SPLICES.

2) WIRING TO CONFORM TO APPLICABLE NATIONAL, STATE AND LOCAL ELECTRICAL CODES.

3) REFER TO SPECIFIC PRODUCT INSTALLATION INSTRUCTIONS FOR SPESCIFIC WIRING REQUIREMENTS.

4) THIS DRAWING IS FOR GRAPHICAL REPRESENTATION OF PRODUCTS DETAILED IN THE HARDWARE SET ONLY.

5) * CONDUCTOR COUNT TO BE DETERMINED BY ACCESS CONTROL PANEL PROVIDER.

HARDWARE USED:
- 1 VON DUPRIN RATED QEL PANIC DEVICES
- 1 PS902-2RS POWER SUPPLY
- 1 EPT POWER TRANSFERS
- 1 621 AA REMOTE CONTROL PUSH BUTTON
- 1 FIRE ALARM CONTACT

TYPE REMOTE 621AA PB WITH SINGLE FIRE RATED ALLEGION QEL DEVICES

OPERATION:
REMOTE CONTROL 621 AA PB TO SIGNAL SINGLE QEL ELECTRIC PANIC BAR TO RETRACT FOR ENTRY.

RELEASING 621 AA PUSH BUTTON OR FIRE ALARM TO CAUSE QEL LATCHES TO EXTEND.

IN THIS EXAMPLE ALL WIRING CONNECTIONS ARE MADE IN PS902 ENCLOSURE.

DATE DRAWN: 02-16-18 REVISION DATE: 02-16-18

ALLEGION™

TITLE: REMOTE 621AA PB WITH SINGLE FIRE RATED ALLEGION QEL PANICS

DRAWING TYPE: RISER DIAGRAM

DWG NO: 112133R

DRAWN/CHECKED BY: B DOVE

REV A

THIS DIAGRAM REPRESENTS A GENERIC CONFIGURATION. CUSTOM WIRING DIAGRAMS CAN BE ACQUIRED BY CONTACTING TECHNICAL SUPPORT.

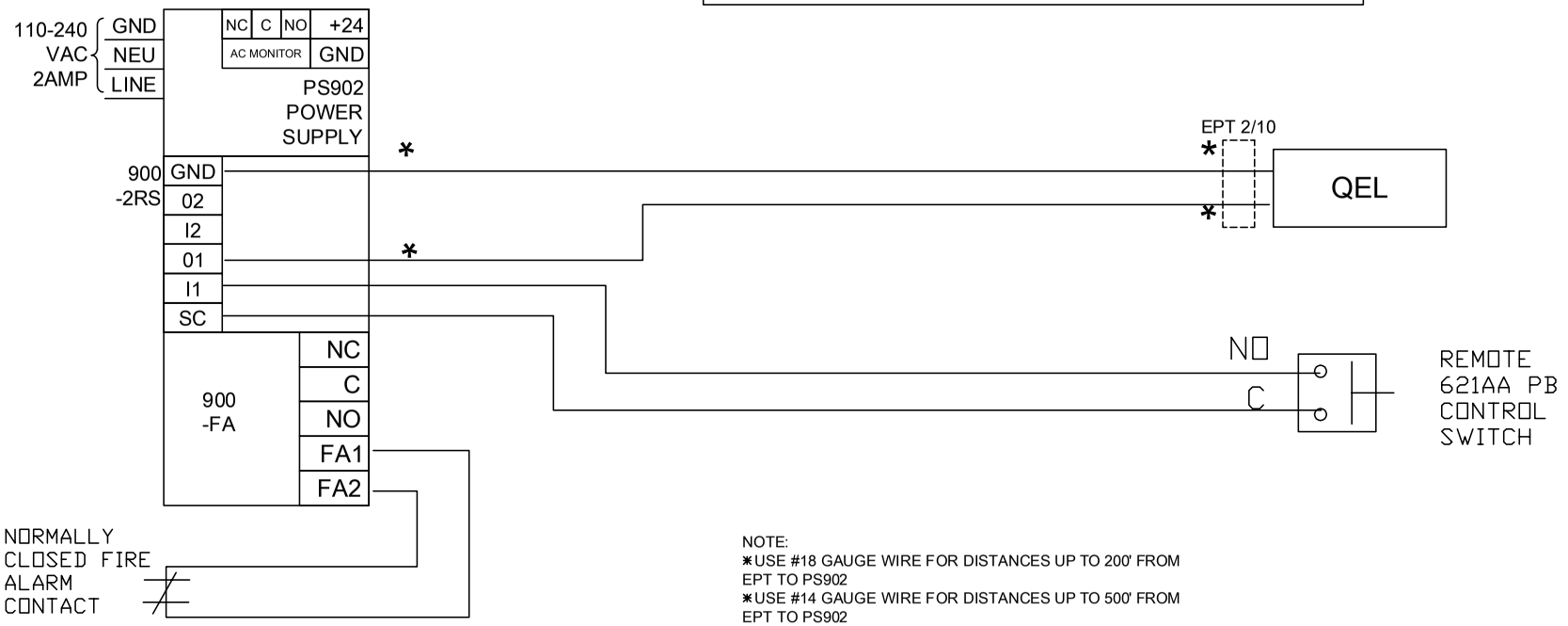

NOTE:
*USE #18 GAUGE WIRE FOR DISTANCES UP TO 200' FROM EPT TO PS902
*USE #14 GAUGE WIRE FOR DISTANCES UP TO 500' FROM EPT TO PS902

SET PS902 TO 24VDC

NOTES:
1) ALL LOW VOLTAGE WIRING TO BE STANDARD, MULTI-CONDUCTOR COLOR CODED WITHOUT SPLICES.

2) WIRING TO CONFORM TO APPLICABLE NATIONAL, STATE AND LOCAL ELECTRICAL CODES.

3) REFER TO SPECIFIC PRODUCT INSTALLATION INSTRUCTIONS FOR SPESCIFIC WIRING REQUIREMENTS.

4) THIS DRAWING IS FOR GRAPHICAL REPRESENTATION OF PRODUCTS DETAILED IN THE HARDWARE SET ONLY.

HARDWARE USED:
1 VON DUPRIN RATED QEL PANIC DEVICES
1 PS902-2RS POWER SUPPLY
1 EPT POWER TRANSFERS
1 621 AA REMOTE CONTROL PUSH BUTTON
1 FIRE ALARM CONTACT

TYPE REMOTE 621AA PB WITH SINGLE FIRE RATED ALLEGION QEL DEVICES

OPERATION:
REMOTE CONTROL 621 AA PB TO SIGNAL SINGLE QEL ELECTRIC PANIC BAR TO RETRACT FOR ENTRY.

RELEASING 621 AA PUSH BUTTON OR FIRE ALARM TO CAUSE QEL LATCHES TO EXTEND.

IN THIS EXAMPLE ALL WIRING CONNECTIONS ARE MADE IN PS902 ENCLOSURE.

DATE DRAWN: 02-16-18
REVISION DATE: 02-16-18

ALLEGION™

TITLE: REMOTE 621AA PB WITH SINGLE FIRE RATED ALLEGION QEL PANICS

DRAWING TYPE: WIRING DIAGRAM
DWG NO: 112133W
DRAWN/CHECKED BY: B DOVE
REV A

THIS DIAGRAM REPRESENTS A GENERIC CONFIGURATION. CUSTOM WIRING DIAGRAMS CAN BE ACQUIRED BY CONTACTING TECHNICAL SUPPORT.

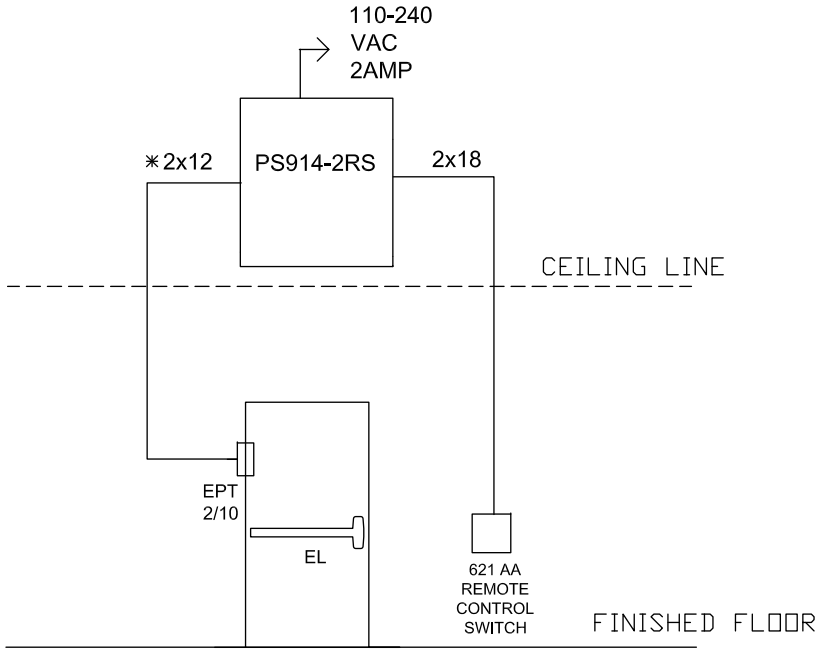

NOTE:
*USE #12 GAUGE WIRE FOR DISTANCES UP TO 200' FROM EPT TO PS914
*USE #14 GAUGE WIRE FOR DISTANCES UP TO 100' FROM EPT TO PS914

SETP PS914 TO 24VDC

NOTES:
1) ALL LOW VOLTAGE WIRING TO BE STANDARD, MULTI-CONDUCTOR COLOR CODED WITHOUT SPLICES.

2) WIRING TO CONFORM TO APPLICABLE NATIONAL, STATE AND LOCAL ELECTRICAL CODES.

3) REFER TO SPECIFIC PRODUCT INSTALLATION INSTRUCTIONS FOR SPESCIFIC WIRING REQUIREMENTS.

4) THIS DRAWING IS FOR GRAPHICAL REPRESENTATION OF PRODUCTS DETAILED IN THE HARDWARE SET ONLY.

5) * CONDUCTOR COUNT TO BE DETERMINED BY ACCESS CONTROL PANEL PROVIDER.

HARDWARE USED:

1 VON DUPRIN OR FALCON EL PANIC DEVICES

1 PS914-2RS POWER SUPPLY

1 EPT POWER TRANSFERS

1 621 AA REMOTE CONTROL PUSH BUTTON

TYPE

REMOTE 621AA PB WITH SINGLE ALLEGION EL DEVICES

OPERATION:
REMOTE CONTROL 621 AA PB TO SIGNAL SINGLE EL ELECTRIC PANIC BAR TO RETRACT FOR ENTRY.

THIS CONFIGURATION REPRESENTS A NON FIRE RATED OPENING.

IN THIS EXAMPLE ALL WIRING CONNECTIONS ARE MADE IN PS914 ENCLOSURE.

DATE DRAWN: 5-3-13

REVISION DATE: 3-14-14

copyright 2013

ALLEGION™

TITLE: REMOTE 621AA PB WITH SINGLE ALLEGION EL PANICS

DRAWING TYPE: RISER DIAGRAM

DWG NO: 109550

DRAWN/CHECKED BY: B DOVE

REV C

THIS DIAGRAM REPRESENTS A GENERIC CONFIGURATION. CUSTOM WIRING DIAGRAMS CAN BE ACQUIRED BY CONTACTING TECHNICAL SUPPORT.

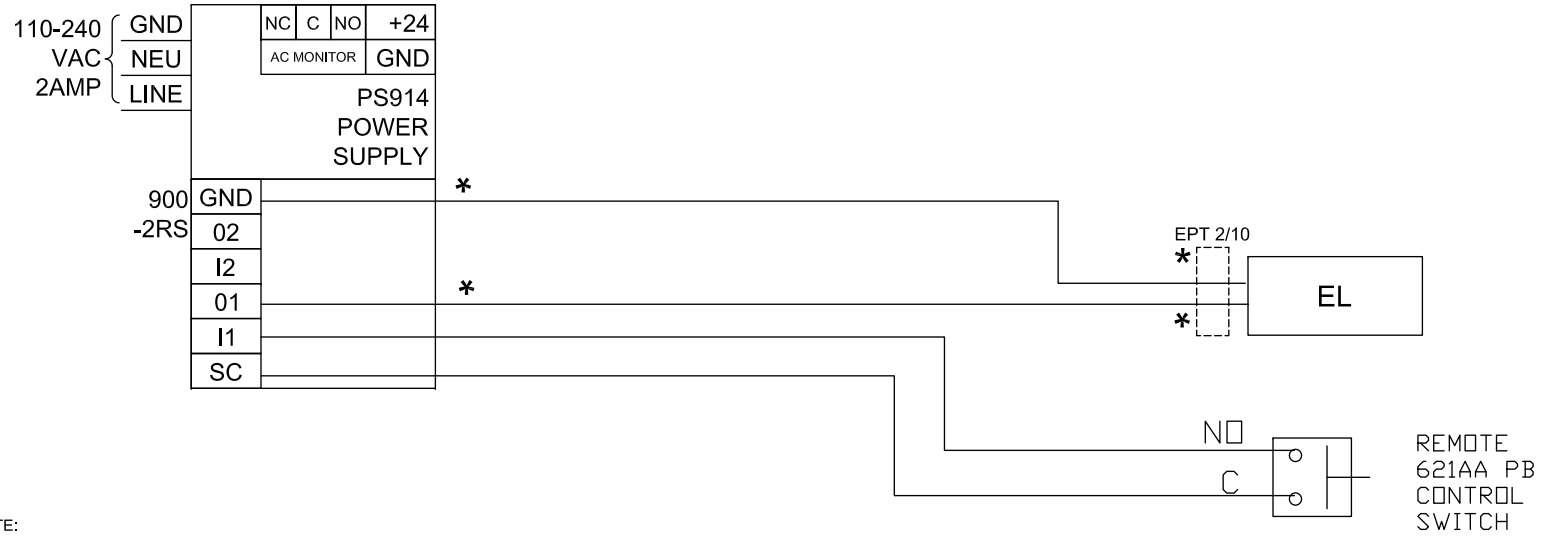

NOTE:
*USE #12 GAUGE WIRE FOR DISTANCES UP TO 200' FROM EPT TO PS914
*USE #14 GAUGE WIRE FOR DISTANCES UP TO 100' FROM EPT TO PS914

SET PS914 TO 24VDC

NOTES:
1) ALL LOW VOLTAGE WIRING TO BE STANDARD, MULTI-CONDUCTOR COLOR CODED WITHOUT SPLICES.

2) WIRING TO CONFORM TO APPLICABLE NATIONAL, STATE AND LOCAL ELECTRICAL CODES.

3) REFER TO SPECIFIC PRODUCT INSTALLATION INSTRUCTIONS FOR SPESCIFIC WIRING REQUIREMENTS.

4) THIS DRAWING IS FOR GRAPHICAL REPRESENTATION OF PRODUCTS DETAILED IN THE HARDWARE SET ONLY.

HARDWARE USED:

1 VON DUPRIN OR FALCON EL PANIC DEVICES

1 PS914-2RS POWER SUPPLY

1 EPT POWER TRANSFERS

621 AA REMOTE CONTROL SWITCH

TYPE

REMOTE 621AA PB WITH SINGLE ALLEGION EL DEVICES

OPERATION:
REMOTE CONTROL 621AA PB TO SIGNAL SINGLE ELECTRIC PANIC BARS TO RETRACT FOR ENTRY.

THIS CONFIGURATION REPRESENTS A NON FIRE RATED OPENING.

IN THIS EXAMPLE ALL WIRING CONNECTIONS ARE MADE IN PS914 ENCLOSURE.

DATE DRAWN: 5-3-13

REVISION DATE: 3-14-14

copyright 2013

ALLEGION™

TITLE: REMOTE 621AA PB WITH SINGLE ALLEGION EL PANICS

DRAWING TYPE: WIRING DIAGRAM

DWG NO: 109550

DRAWN/CHECKED BY: B DOVE

REV C

THIS DIAGRAM REPRESENTS A GENERIC CONFIGURATION. CUSTOM WIRING DIAGRAMS CAN BE ACQUIRED BY CONTACTING TECHNICAL SUPPORT.

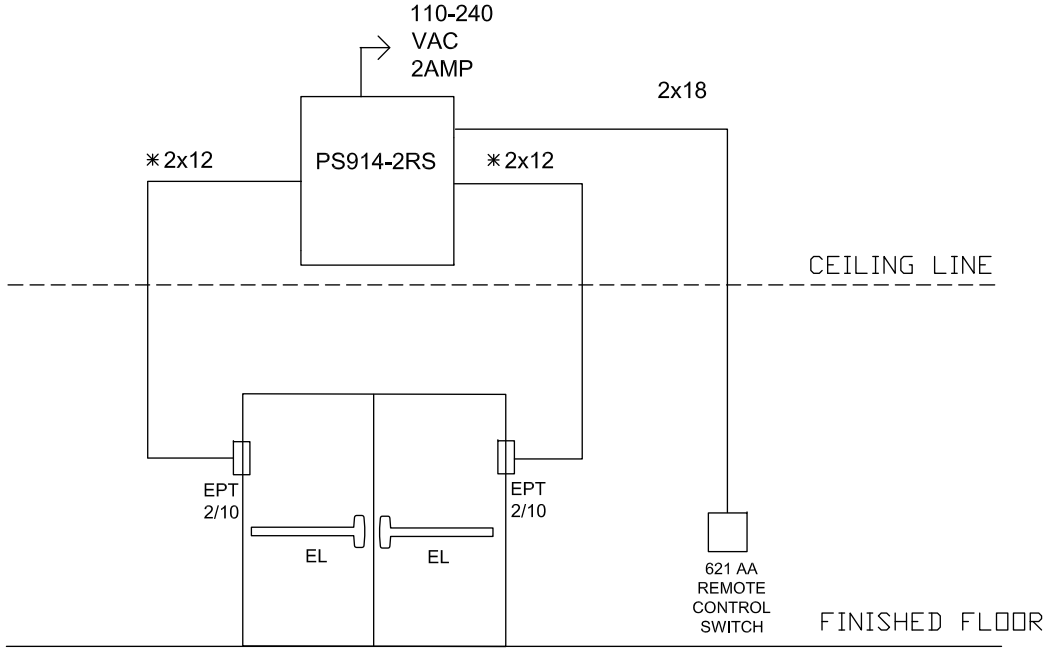

NOTE:
✳USE #12 GAUGE WIRE FOR DISTANCES UP TO 200' FROM EPT TO PS914
✳USE #14 GAUGE WIRE FOR DISTANCES UP TO 100' FROM EPT TO PS914

SET PS914 TO 24VDC

NOTES:
1) ALL LOW VOLTAGE WIRING TO BE STANDARD, MULTI-CONDUCTOR COLOR CODED WITHOUT SPLICES.

2) WIRING TO CONFORM TO APPLICABLE NATIONAL, STATE AND LOCAL ELECTRICAL CODES.

3) REFER TO SPECIFIC PRODUCT INSTALLATION INSTRUCTIONS FOR SPESCIFIC WIRING REQUIREMENTS.

4) THIS DRAWING IS FOR GRAPHICAL REPRESENTATION OF PRODUCTS DETAILED IN THE HARDWARE SET ONLY.

HARDWARE USED:

2 VON DUPRIN OR FALCON EL PANIC DEVICES

1 PS914-2RS POWER SUPPLY

2 EPT POWER TRANSFERS

1 621 AA REMOTE CONTROL PUSH BUTTON

TYPE

REMOTE 621AA PB WITH PAIR ALLEGION EL DEVICES

OPERATION:
REMOTE CONTROL 621 AA PB TO SIGNAL PAIR EL ELECTRIC PANIC BAR TO RETRACT FOR ENTRY.

THIS CONFIGURATION REPRESENTS A NON FIRE RATED OPENING.

IN THIS EXAMPLE ALL WIRING CONNECTIONS ARE MADE IN PS914 ENCLOSURE.

DATE DRAWN: 5-3-13

REVISION DATE: 3-14-14

copyright 2013

ALLEGION™

TITLE: REMOTE 621AA PB WITH PAIR ALLEGION EL PANICS

DRAWING TYPE: RISER DIAGRAM

DWG NO: 109551

DRAWN/CHECKED BY: B DOVE

REV. C

THIS DIAGRAM REPRESENTS A GENERIC CONFIGURATION. CUSTOM WIRING DIAGRAMS CAN BE ACQUIRED BY CONTACTING TECHNICAL SUPPORT.

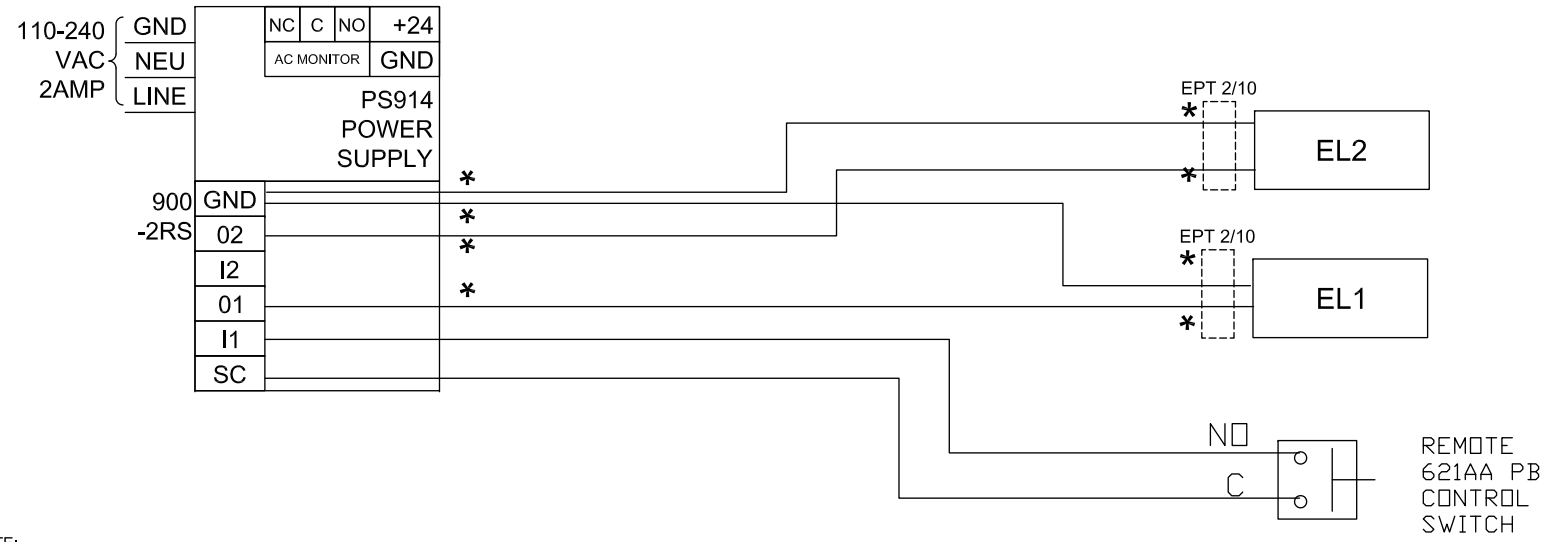

NOTE:
*USE #12 GAUGE WIRE FOR DISTANCES UP TO 200' FROM EPT TO PS914
*USE #14 GAUGE WIRE FOR DISTANCES UP TO 100' FROM EPT TO PS914

SET PS914 TO 24VDC

NOTES:
1) ALL LOW VOLTAGE WIRING TO BE STANDARD, MULTI-CONDUCTOR COLOR CODED WITHOUT SPLICES.

2) WIRING TO CONFORM TO APPLICABLE NATIONAL, STATE AND LOCAL ELECTRICAL CODES.

3) REFER TO SPECIFIC PRODUCT INSTALLATION INSTRUCTIONS FOR SPESCIFIC WIRING REQUIREMENTS.

4) THIS DRAWING IS FOR GRAPHICAL REPRESENTATION OF PRODUCTS DETAILED IN THE HARDWARE SET ONLY.

HARDWARE USED:
2 VON DUPRIN OR FALCON FIRE RATED EL PANIC DEVICES

1 PS914-2RS POWER SUPPLY

2 EPT POWER TRANSFERS

621 AA REMOTE CONTROL SWITCH

TYPE REMOTE 621AA PB WITH PAIR NON FIRE RATED ALLEGION EL DEVICES

OPERATION:
REMOTE CONTROL 621AA PB TO SIGNAL PAIR ELECTRIC PANIC BARS TO RETRACT FOR ENTRY.

THIS EXAMPLE IS A NON FIRE RATED APPLICATION.

IN THIS EXAMPLE ALL WIRING CONNECTIONS ARE MADE IN PS914 ENCLOSURE.

DATE DRAWN: 5-3-13 REVISION DATE: 3-14-14

copyright 2013

ALLEGION™

TITLE: REMOTE 621AA PB WITH PAIR NON FIRE RATED ALLEGION EL PANICS

DRAWING TYPE: WIRING DIAGRAM

DWG NO: 109551

DRAWN/CHECKED BY: B DOVE

REV C

THIS DIAGRAM REPRESENTS A GENERIC CONFIGURATION. CUSTOM WIRING DIAGRAMS CAN BE ACQUIRED BY CONTACTING TECHNICAL SUPPORT.

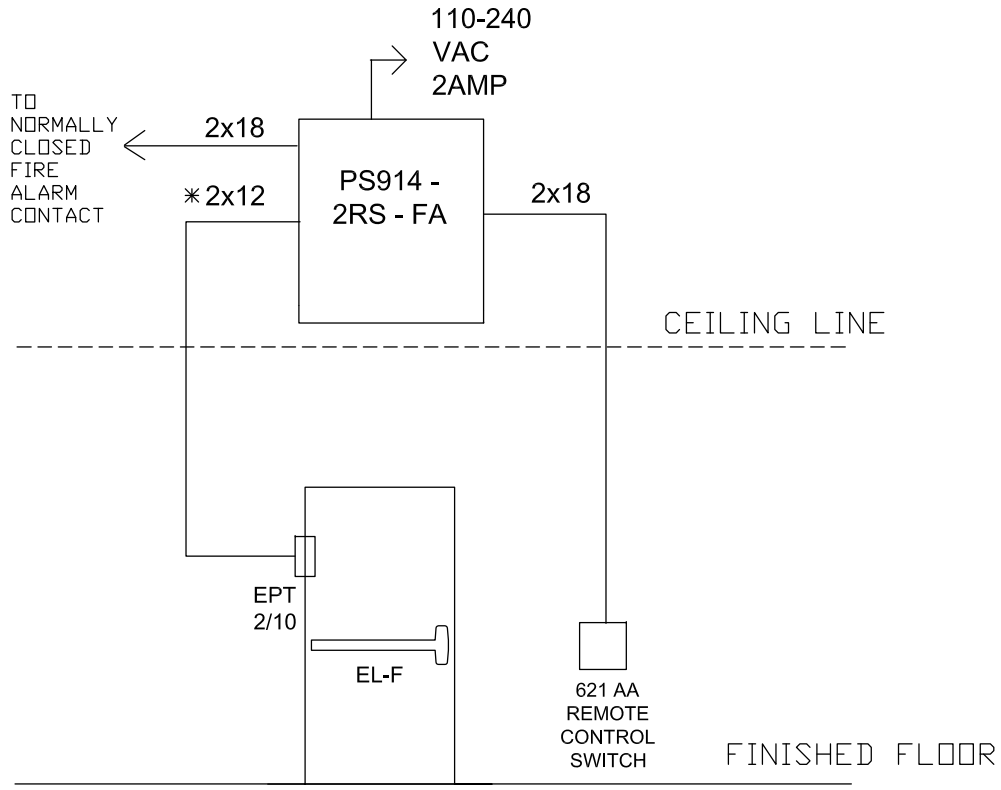

NOTE:
✳USE #12 GAUGE WIRE FOR DISTANCES UP TO 200' FROM EPT TO PS914
✳USE #14 GAUGE WIRE FOR DISTANCES UP TO 100' FROM EPT TO PS914

SETP PS914 TO 24VDC

NOTES:
1) ALL LOW VOLTAGE WIRING TO BE STANDARD, MULTI-CONDUCTOR COLOR CODED WITHOUT SPLICES.

2) WIRING TO CONFORM TO APPLICABLE NATIONAL, STATE AND LOCAL ELECTRICAL CODES.

3) REFER TO SPECIFIC PRODUCT INSTALLATION INSTRUCTIONS FOR SPESCIFIC WIRING REQUIREMENTS.

4) THIS DRAWING IS FOR GRAPHICAL REPRESENTATION OF PRODUCTS DETAILED IN THE HARDWARE SET ONLY.

5) ADDITIONAL WIRING WILL BE REQUIRED FROM ACP THAT IS NOT SHOWN HERE. CONSULT PROVIDER FOR DETAILS.

HARDWARE USED:
1 VON DUPRIN OR FALCON FIRE RATED EL PANIC DEVICES

1 PS914-2RS POWER SUPPLY

1 EPT POWER TRANSFERS

1 621 AA REMOTE CONTROL PUSH BUTTON

1 FIRE ALARM CONTACT

TYPE REMOTE 621AA PB WITH SINGLE FIRE RATED EL DEVICES

OPERATION:
REMOTE CONTROL 621 AA PB TO SIGNAL SINGLE EL ELECTRIC PANIC BAR TO RETRACT FOR ENTRY.

RELEASING 621 AA PUSH BUTTON OR FIRE ALARM TO CAUSE EL LATCHES TO EXTEND.

IN THIS EXAMPLE ALL WIRING CONNECTIONS ARE MADE IN PS914 ENCLOSURE.

DATE DRAWN: 5-3-13 | REVISION DATE: 5-3-13

copyright 2013

ALLEGION™

TITLE: REMOTE 621AA PB WITH SINGLE FIRE RATED EL PANICS

DRAWING TYPE: RISER DIAGRAM

DWG NO: 109552

DRAWN/CHECKED BY: B DOVE

REV A

THIS DIAGRAM REPRESENTS A GENERIC CONFIGURATION. CUSTOM WIRING DIAGRAMS CAN BE ACQUIRED BY CONTACTING TECHNICAL SUPPORT.

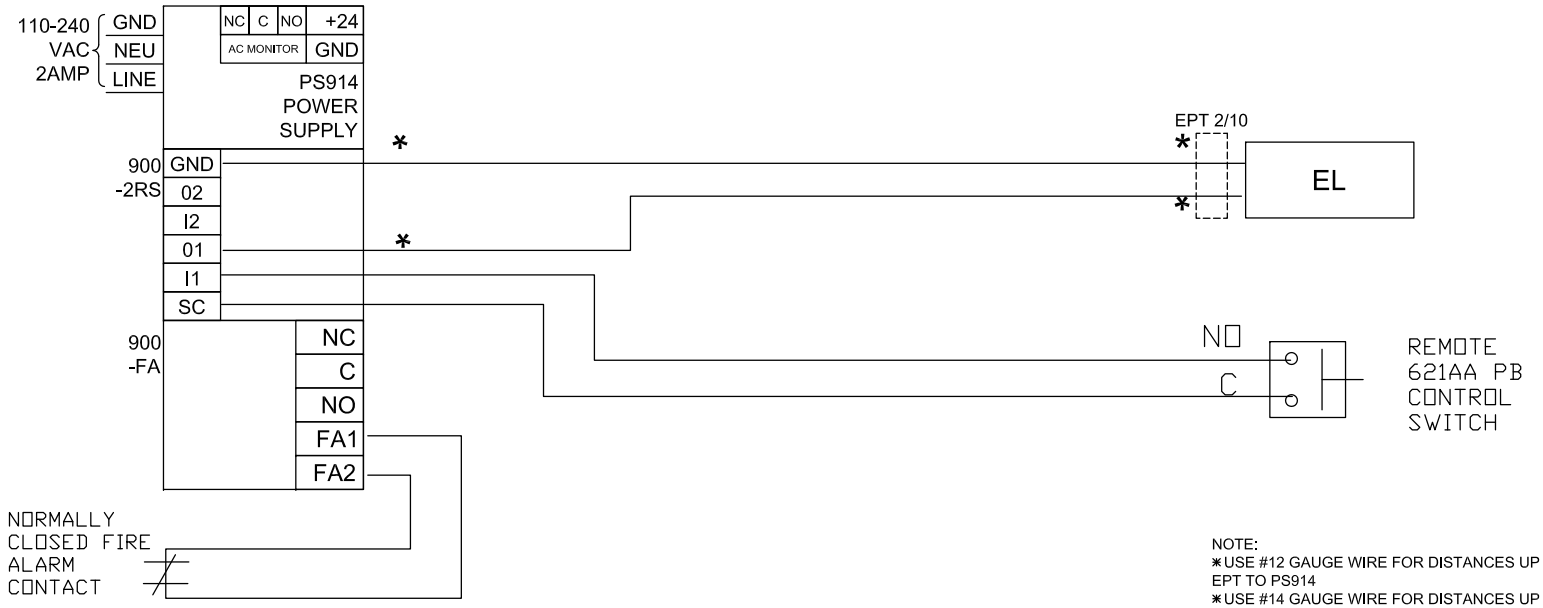

NOTE:
* USE #12 GAUGE WIRE FOR DISTANCES UP TO 200' FROM EPT TO PS914
* USE #14 GAUGE WIRE FOR DISTANCES UP TO 100' FROM EPT TO PS914

SET PS914 TO 24VDC

NOTES:
1) ALL LOW VOLTAGE WIRING TO BE STANDARD, MULTI-CONDUCTOR COLOR CODED WITHOUT SPLICES.

2) WIRING TO CONFORM TO APPLICABLE NATIONAL, STATE AND LOCAL ELECTRICAL CODES.

3) REFER TO SPECIFIC PRODUCT INSTALLATION INSTRUCTIONS FOR SPESCIFIC WIRING REQUIREMENTS.

4) THIS DRAWING IS FOR GRAPHICAL REPRESENTATION OF PRODUCTS DETAILED IN THE HARDWARE SET ONLY.

5) ADDITIONAL WIRING WILL BE REQUIRED FROM ACP THAT IS NOT SHOWN HERE. CONSULT PROVIDER FOR DETAILS.

HARDWARE USED:
1 VON DUPRIN OR FALCON FIRE RATED EL PANIC DEVICES

1 PS914-2RS POWER SUPPLY

1 EPT POWER TRANSFERS

621 AA REMOTE CONTROL SWITCH

1 FIRE ALARM CONTACT

TYPE REMOTE 621AA PB WITH SINGLE FIRE RATED EL DEVICES

OPERATION:
REMOTE CONTROL 621AA PB TO SIGNAL SINGLE ELECTRIC PANIC BARS TO RETRACT FOR ENTRY.

RELEASING 621AA PUSH BUTTON OR FIRE ALARM TO CAUSE EL LATCHES TO EXTEND.

IN THIS EXAMPLE ALL WIRING CONNECTIONS ARE MADE IN PS914 ENCLOSURE.

DATE DRAWN: 5-3-13 REVISION DATE: 5-3-13

copyright 2013

ALLEGION™

TITLE: REMOTE 621AA PB WITH SINGLE FIRE RATED EL PANICS

DRAWING TYPE: WIRING DIAGRAM

DWG NO: 109552

DRAWN/CHECKED BY: B DOVE

REV A

THIS DIAGRAM REPRESENTS A GENERIC CONFIGURATION. CUSTOM WIRING DIAGRAMS CAN BE ACQUIRED BY CONTACTING TECHNICAL SUPPORT.

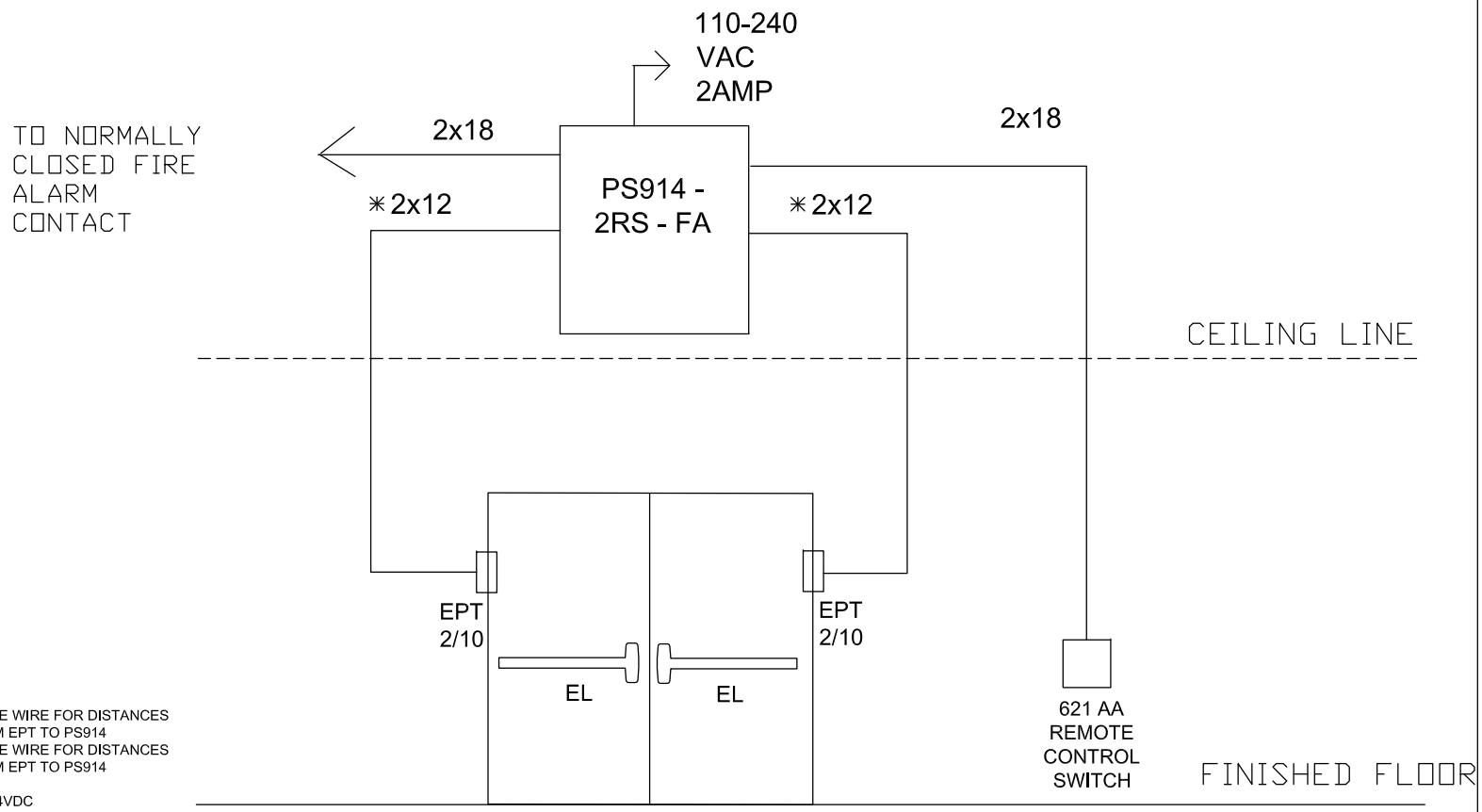

NOTE:
*USE #12 GAUGE WIRE FOR DISTANCES UP TO 200' FROM EPT TO PS914
*USE #14 GAUGE WIRE FOR DISTANCES UP TO 100' FROM EPT TO PS914

SET PS914 TO 24VDC

NOTES:
1) ALL LOW VOLTAGE WIRING TO BE STANDARD, MULTI-CONDUCTOR COLOR CODED WITHOUT SPLICES.

2) WIRING TO CONFORM TO APPLICABLE NATIONAL, STATE AND LOCAL ELECTRICAL CODES.

3) REFER TO SPECIFIC PRODUCT INSTALLATION INSTRUCTIONS FOR SPESCIFIC WIRING REQUIREMENTS.

4) THIS DRAWING IS FOR GRAPHICAL REPRESENTATION OF PRODUCTS DETAILED IN THE HARDWARE SET ONLY.

5) ADDITIONAL WIRING WILL BE REQUIRED FROM ACP THAT IS NOT SHOWN HERE. CONSULT PROVIDER FOR DETAILS.

HARDWARE USED:
2 VON DUPRIN OR FALCON FIRE RATED EL PANIC DEVICES

1 PS914-2RS-FA POWER SUPPLY

2 EPT POWER TRANSFERS

1 621 AA REMOTE CONTROL PUSH BUTTON

1 FIRE ALARM CONTACT

TYPE REMOTE 621AA PB WITH PAIR FIRE RATED EL DEVICES

OPERATION:
REMOTE CONTROL 621 AA PB TO SIGNAL PAIR FIRE RATED EL ELECTRIC PANIC BAR TO RETRACT FOR ENTRY.

RELEASING 621AA PUSH BUTTON OR FIRE ALARM WILL CAUSE EL LATCHES TO EXTEND.

IN THIS EXAMPLE ALL WIRING CONNECTIONS ARE MADE IN PS914 ENCLOSURE.

DATE DRAWN: 5-3-13 REVISION DATE 5-3-13

copyright 2013

ALLEGION™

TITLE: REMOTE 621AA PB WITH PAIR FIRE RATED EL PANICS

DRAWING TYPE: RISER DIAGRAM

DWG NO: 109553

DRAWN/CHECKED BY: B DOVE

REV A

THIS DIAGRAM REPRESENTS A GENERIC CONFIGURATION. CUSTOM WIRING DIAGRAMS CAN BE ACQUIRED BY CONTACTING TECHNICAL SUPPORT.

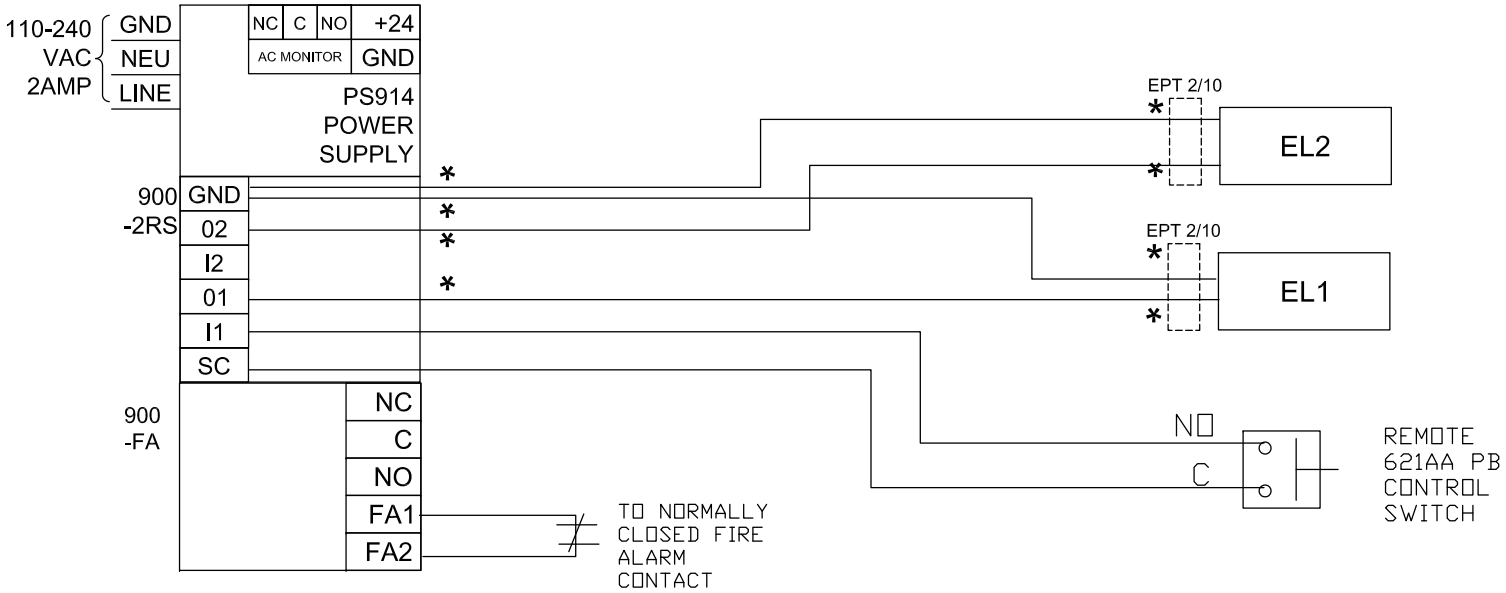

NOTE:
*USE #12 GAUGE WIRE FOR DISTANCES UP TO 200' FROM EPT TO PS914
*USE #14 GAUGE WIRE FOR DISTANCES UP TO 100' FROM EPT TO PS914

SET PS914 TO 24VDC

NOTES:
1) ALL LOW VOLTAGE WIRING TO BE STANDARD, MULTI-CONDUCTOR COLOR CODED WITHOUT SPLICES.

2) WIRING TO CONFORM TO APPLICABLE NATIONAL, STATE AND LOCAL ELECTRICAL CODES.

3) REFER TO SPECIFIC PRODUCT INSTALLATION INSTRUCTIONS FOR SPESCIFIC WIRING REQUIREMENTS.

4) THIS DRAWING IS FOR GRAPHICAL REPRESENTATION OF PRODUCTS DETAILED IN THE HARDWARE SET ONLY.

5) ADDITIONAL WIRING WILL BE REQUIRED FROM ACP THAT IS NOT SHOWN HERE. CONSULT PROVIDER FOR DETAILS.

HARDWARE USED:
2 VON DUPRIN OR FALCON FIRE RATED EL PANIC DEVICES

1 PS914-2RS-FA POWER SUPPLY

2 EPT POWER TRANSFERS

621 AA REMOTE CONTROL SWITCH

1 FIRE ALARM CONTACT

TYPE REMOTE 621AA PB WITH PAIR FIRE RATED EL DEVICES

OPERATION:
REMOTE CONTROL 621AA PB TO SIGNAL PAIR FIRE RATED ELECTRIC PANIC BARS TO RETRACT FOR ENTRY.

RELEASING 621AA PUSH BUTTON OR FIRE ALARM TO CAUSE EL LATCHES TO EXTEND.

IN THIS EXAMPLE ALL WIRING CONNECTIONS ARE MADE IN PS914 ENCLOSURE.

DATE DRAWN: 5-3-13 REVISION DATE 5-3-13

copyright 2013

ALLEGION™

TITLE: REMOTE 621AA PB WITH PAIR FIRE RATED EL PANICS

DRAWING TYPE: WIRING DIAGRAM

DWG NO: 109553

DRAWN/CHECKED BY: B DOVE

REV A

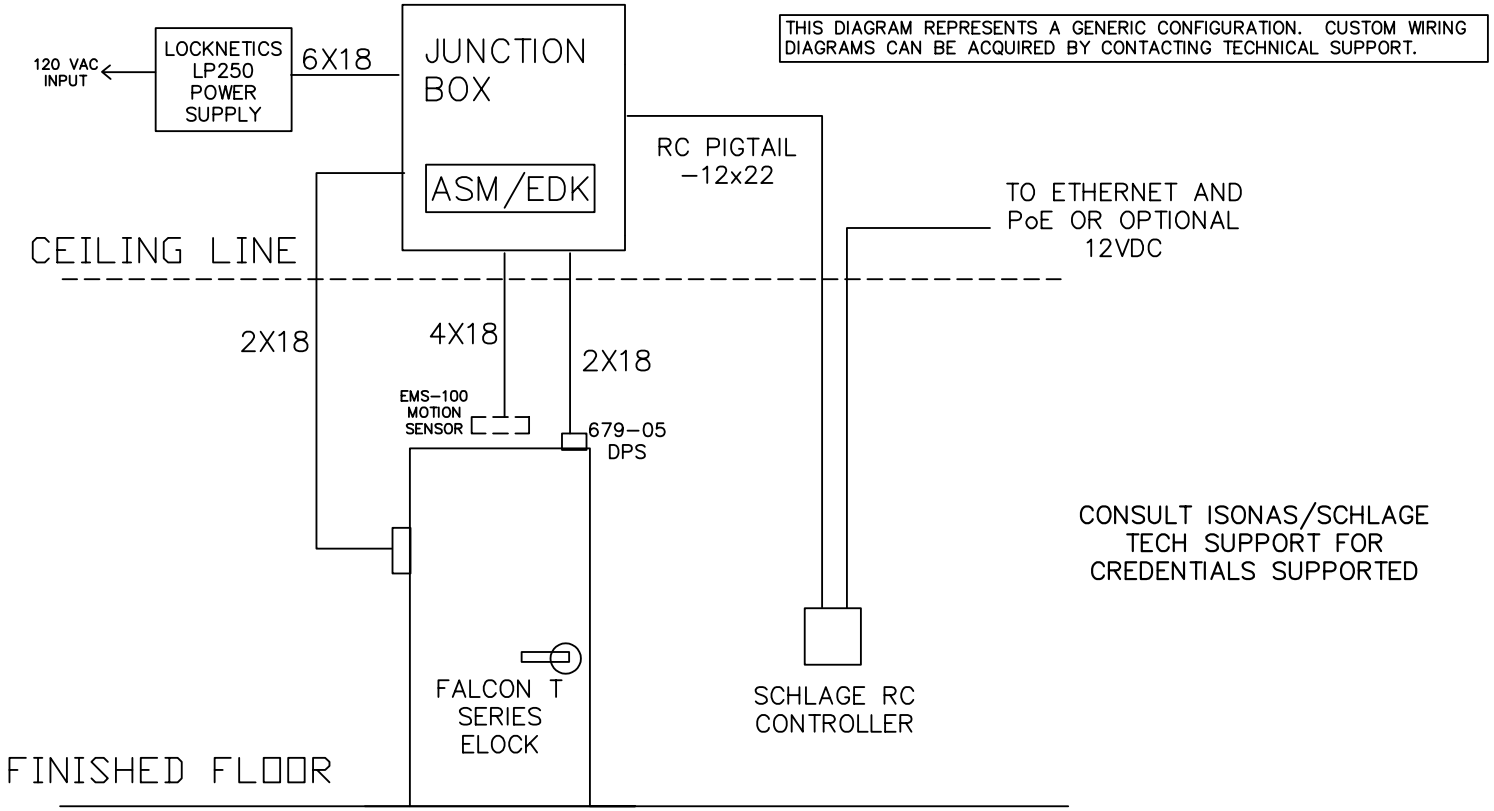

NOTES:
1) ALL LOW VOLTAGE WIRING TO BE STANDARD, MULTI-CONDUCTOR COLOR CODED WITHOUT SPLICES.

2) WIRING TO CONFORM TO APPLICABLE NATIONAL, STATE AND LOCAL ELECTRICAL CODES.

3) REFER TO SPECIFIC PRODUCT INSTALLATION INSTRUCTIONS FOR SPECIFIC WIRING REQUIREMENTS.

4) THIS DRAWING IS FOR GRAPHICAL REPRESENTATION OF PRODUCTS DETAILED IN THE HARDWARE SET ONLY.

5) * CONDUCTOR COUNT TO BE DETERMINED BY ACCESS CONTROL PANEL PROVIDER.

HARDWARE USED:
SCHLAGE RC CONTROLLER
SCHLAGE RC PIGTAIL
SCHLAGE ASM/EDK MODULE
FALCON T SERIES ELOCK
LOCKNETICS EMS-100 MOTION SENSOR
SCHLAGE 679-05 DPS
LOCKNETICS LP250 POWER SUPPLY
JUNCTION BOX

OPERATION:.
DOORS NORMALLY CLOSED AND LOCKED

ENTRY BY VALID CREDENTIAL TO UNLOCK ELOCK OR KEY OVERRIDE.

MOTION SENSOR TO SHUNT DOOR FORCED ALARM.

FREE EGRESS AT ALL TIMES.

DATE DRAWN: 10-15-20
REVISION DATE: 3-2-22

ALLEGION™

SCHLAGE RC CONTROLLER, ELOCK, DPS, MOTION SENSOR, LP250 PS - SINGLE DOOR

DRAWING TYPE: RISER DIAGRAM
DWG NO: 113738R
DRAWN/CHECKED BY: DOVE/TAMARCHENKO
REV B

THIS DIAGRAM REPRESENTS A GENERIC CONFIGURATION. CUSTOM WIRING DIAGRAMS CAN BE ACQUIRED BY CONTACTING TECHNICAL SUPPORT.

CONSULT ISONAS/SCHLAGE TECH SUPPORT FOR CREDENTIALS SUPPORTED

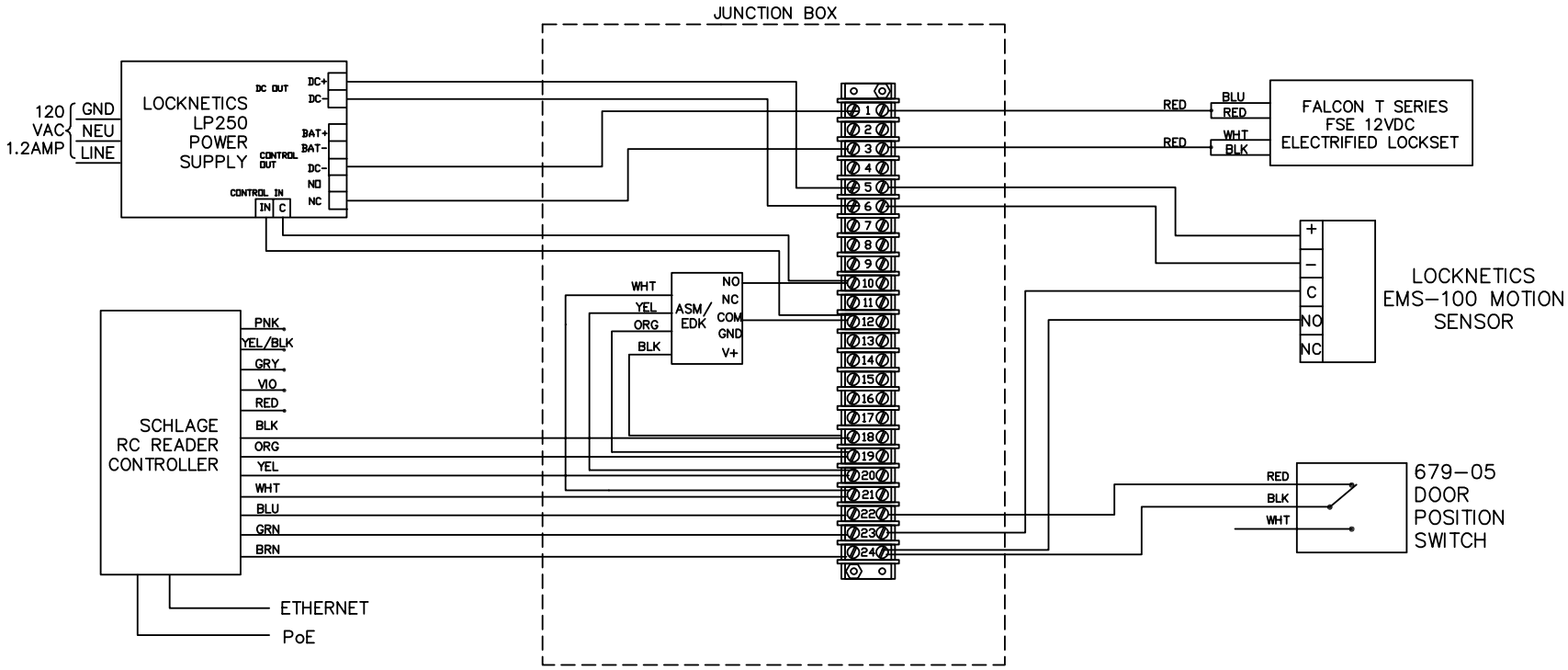

NOTES:
1) ALL LOW VOLTAGE WIRING TO BE STANDARD, MULTI-CONDUCTOR COLOR CODED WITHOUT SPLICES.

2) WIRING TO CONFORM TO APPLICABLE NATIONAL, STATE AND LOCAL ELECTRICAL CODES.

3) REFER TO SPECIFIC PRODUCT INSTALLATION INSTRUCTIONS FOR SPECIFIC WIRING REQUIREMENTS.

4) THIS DRAWING IS FOR GRAPHICAL REPRESENTATION OF PRODUCTS DETAILED IN THE HARDWARE SET ONLY.

HARDWARE USED:
SCHLAGE RC CONTROLLER
SCHLAGE RC PIGTAIL
SCHLAGE ASM/EDK MODULE
FALCON T SERIES ELOCK
LOCKNETICS EMS-100 MOTION SENSOR
SCHLAGE 679-05 DPS
LOCKNETICS LP250 POWER SUPPLY
JUNCTION BOX

OPERATION:
DOORS NORMALLY CLOSED AND LOCKED.

ENTRY BY VALID CREDENTIAL TO UNLOCK ELOCK OR KEY OVERRIDE.

MOTION SENSOR TO SHUNT DOOR FORCED ALARM.

FREE EGRESS AT ALL TIMES.

DATE DRAWN: 10-15-20
REVISION DATE: 3-2-22

ALLEGION™

SCHLAGE RC CONTROLLER, ELOCK, DPS, MOTION SENSOR, LP250 PS - SINGLE DOOR

DRAWING TYPE: WIRING DIAGRAM
DWG NO: 113738W
DRAWN/CHECKED BY: DOVE/TAMARCHENKO
REV B

THIS DIAGRAM REPRESENTS A GENERIC CONFIGURATION. CUSTOM WIRING DIAGRAMS CAN BE ACQUIRED BY CONTACTING TECHNICAL SUPPORT.

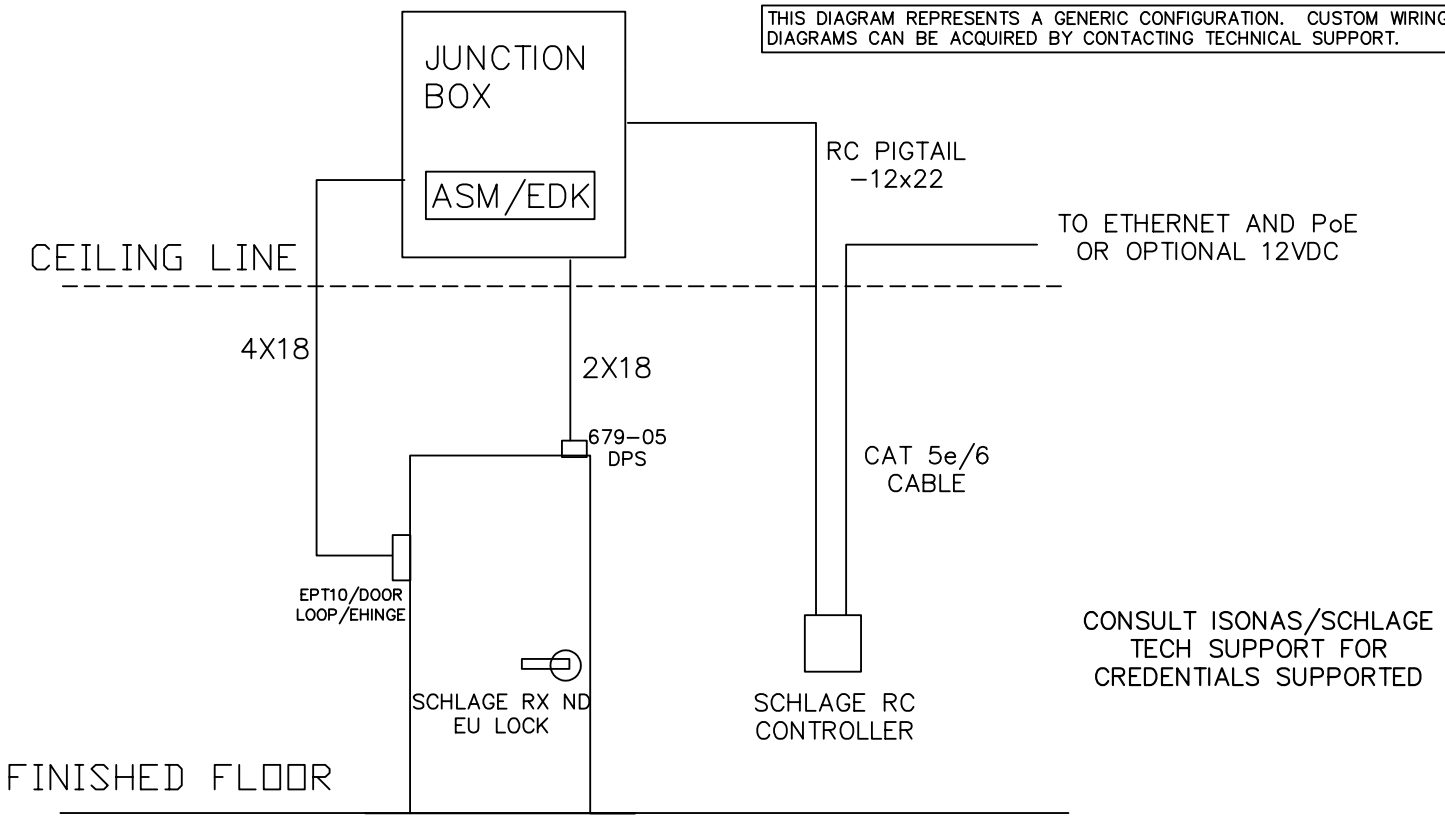

NOTES:
1) ALL LOW VOLTAGE WIRING TO BE STANDARD, MULTI-CONDUCTOR COLOR CODED WITHOUT SPLICES.

2) WIRING TO CONFORM TO APPLICABLE NATIONAL, STATE AND LOCAL ELECTRICAL CODES.

3) REFER TO SPECIFIC PRODUCT INSTALLATION INSTRUCTIONS FOR SPECIFIC WIRING REQUIREMENTS.

4) THIS DRAWING IS FOR GRAPHICAL REPRESENTATION OF PRODUCTS DETAILED IN THE HARDWARE SET ONLY.

5) * CONDUCTOR COUNT TO BE DETERMINED BY ACCESS CONTROL PANEL PROVIDER.

HARDWARE USED:
SCHLAGE RC CONTROLLER
SCHLAGE RC PIGTAIL
SCHLAGE ASM/EDK MODULE
SCHLAGE RX ND EU LOCK
SCHLAGE 679-05 DPS
EPT10/DOOR LOOP/EHINGE
JUNCTION BOX

OPERATION:
DOORS NORMALLY CLOSED AND LOCKED.

ENTRY BY VALID CREDENTIAL TO UNLOCK ELOCK OR KEY OVERRIDE.

RX SWITCH IN RX ND E LOCK TO SHUNT DOOR FORCED ALARM.

FREE EGRESS AT ALL TIMES.

DATE DRAWN: 10-16-20
REVISION DATE: 3-3-22

ALLEGION™

SCHLAGE RC CONTROLLER, RX ND EU ELOCK, 679-05 DPS - SINGLE DOOR

DRAWING TYPE: RISER DIAGRAM
DWG NO: 113739R
DRAWN/CHECKED BY: DOVE/TAMARCHENKO
REV B

THIS DIAGRAM REPRESENTS A GENERIC CONFIGURATION. CUSTOM WIRING DIAGRAMS CAN BE ACQUIRED BY CONTACTING TECHNICAL SUPPORT.

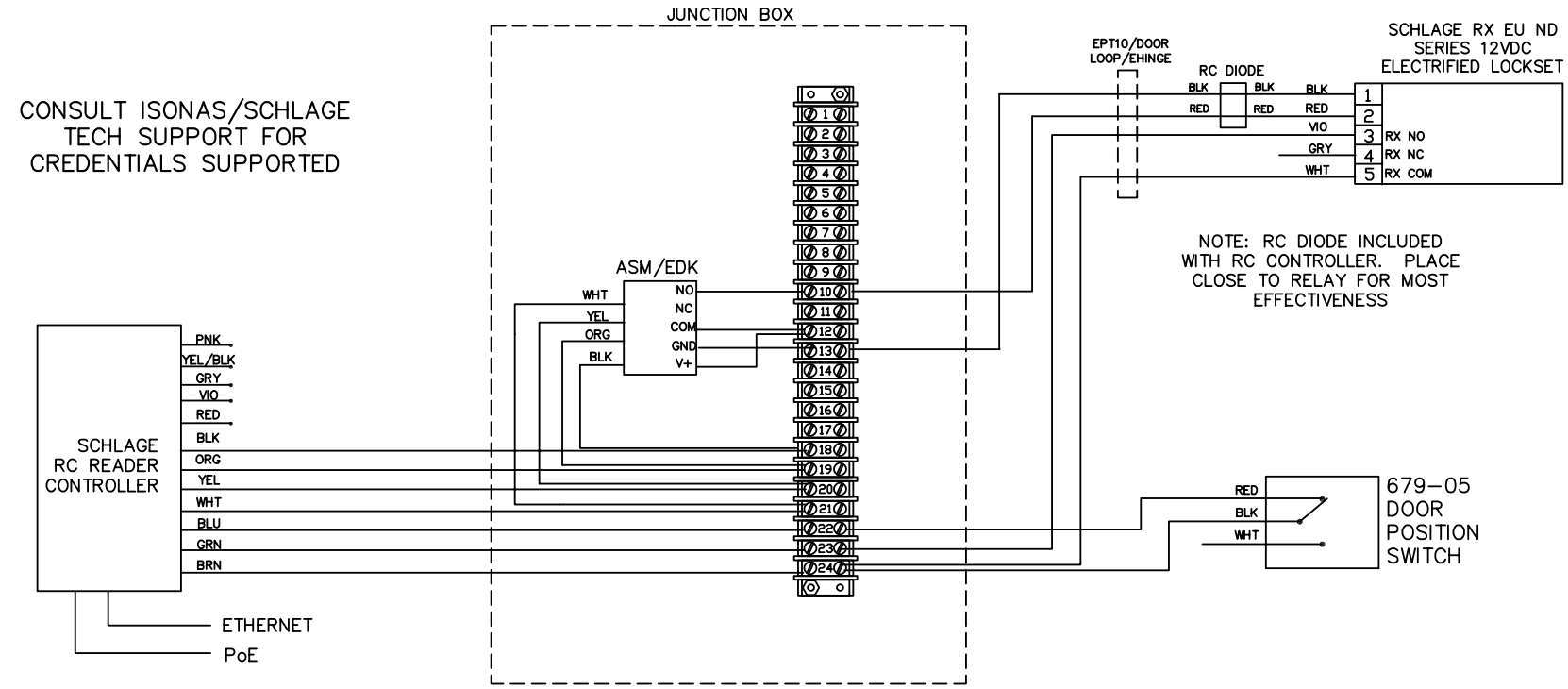

NOTES:
1) ALL LOW VOLTAGE WIRING TO BE STANDARD, MULTI-CONDUCTOR COLOR CODED WITHOUT SPLICES.

2) WIRING TO CONFORM TO APPLICABLE NATIONAL, STATE AND LOCAL ELECTRICAL CODES.

3) REFER TO SPECIFIC PRODUCT INSTALLATION INSTRUCTIONS FOR SPECIFIC WIRING REQUIREMENTS.

4) THIS DRAWING IS FOR GRAPHICAL REPRESENTATION OF PRODUCTS DETAILED IN THE HARDWARE SET ONLY.

HARDWARE USED:

SCHLAGE RC CONTROLLER
SCHLAGE RC PIGTAIL
SCHLAGE ASM/EDK MODULE
SCHLAGE RX ND EU LOCK
SCHLAGE 679-05 DPS
EPT10/DOOR LOOP/EHINGE
JUNCTION BOX

OPERATION:
DOORS NORMALLY CLOSED AND LOCKED.

ENTRY BY VALID CREDENTIAL TO UNLOCK ELOCK OR KEY OVERRIDE.

RX SWITCH IN RX ND E LOCK TO SHUNT DOOR FORCED ALARM.

FREE EGRESS AT ALL TIMES.

DATE DRAWN: 10-16-20

REVISION DATE: 3-3-22

ALLEGION™

SCHLAGE RC CONTROLLER, RX ND EU ELOCK, 679-05 DPS - SINGLE DOOR

DRAWING TYPE: WIRING DIAGRAM

DWG NO: 113739W

REV B

DRAWN/CHECKED BY: DOVE/TAMARCHENKO

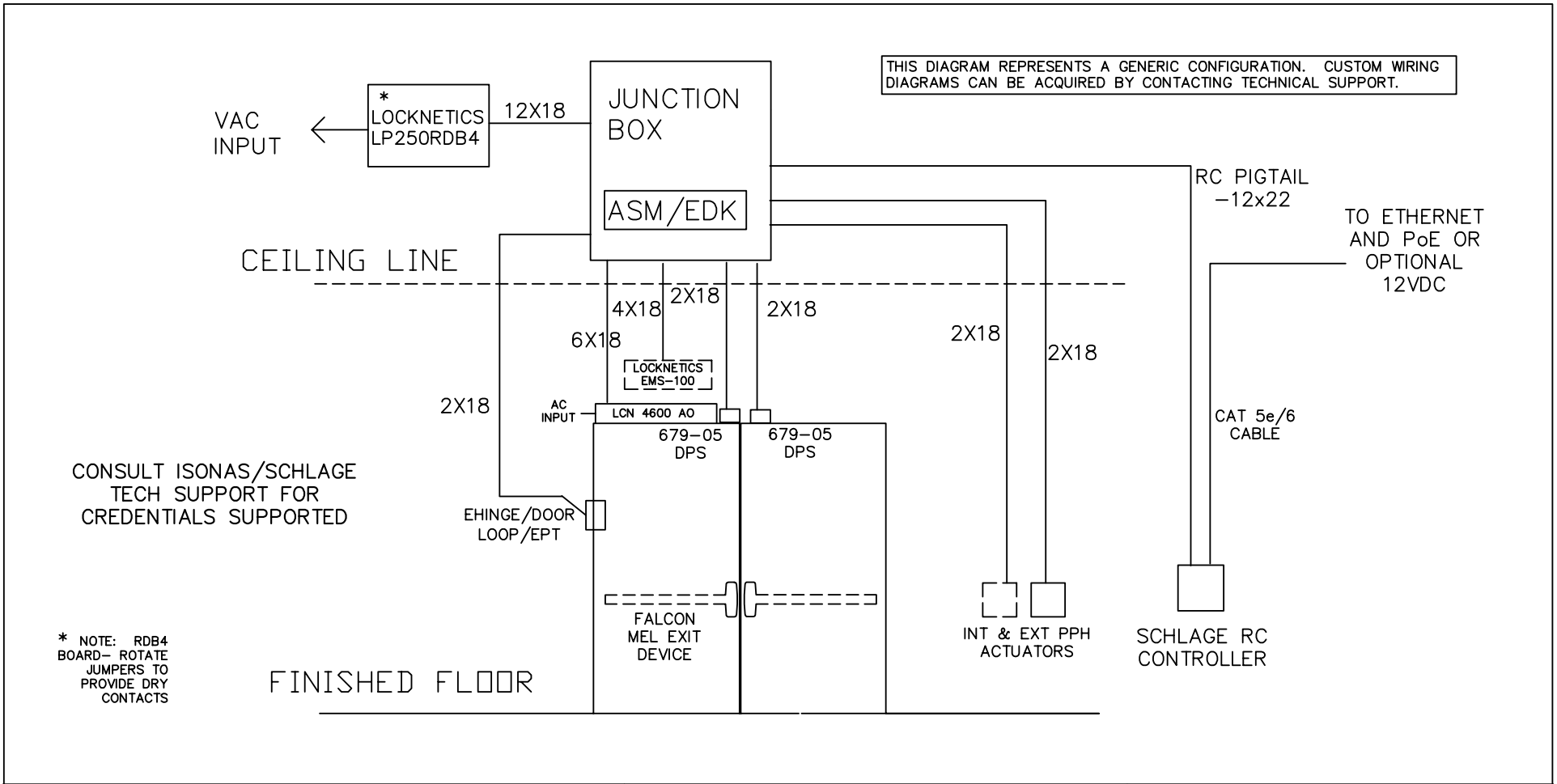

NOTES:
1) ALL LOW VOLTAGE WIRING TO BE STANDARD, MULTI-CONDUCTOR COLOR CODED WITHOUT SPLICES.

2) WIRING TO CONFORM TO APPLICABLE NATIONAL, STATE AND LOCAL ELECTRICAL CODES.

3) REFER TO SPECIFIC PRODUCT INSTALLATION INSTRUCTIONS FOR SPECIFIC WIRING REQUIREMENTS.

4) THIS DRAWING IS FOR GRAPHICAL REPRESENTATION OF PRODUCTS DETAILED IN THE HARDWARE SET ONLY.

5) * CONDUCTOR COUNT TO BE DETERMINED BY ACCESS CONTROL PANEL PROVIDER.

HARDWARE USED:
- SCHLAGE RC CONTROLLER
- SCHLAGE RC PIGTAIL
- SCHLAGE ASM/EDK MODULE
- LOCKNETICS EMS-100 MOTION SENSOR
- 1 FALCON MEL 24/25 EXIT DEVICES
- 2 DOOR LOOP OR EHINGE OR EPT
- LCN 4600 AO
- 2 LOCKNETICS PPH ACTUATORS
- LOCKNETICS LP250RDB4
- 2 679-05 DPS
- 1 12VDC DPDT RELAY
- JUNCTION BOX

OPERATION:
DOORS NORMALLY CLOSED AND LOCKED.

ENTRY BY VALID CREDENTIAL OR KEY OVERRIDE. CREDENTIAL SIGNALS MEL LATCH RETRACTION ON RHR LEAF PANIC DEVICE AND ENABLES EXTERIOR ACTUATOR. INTERIOR ACTUATOR ALWAYS ACTIVE.

EMS-100 MOTION SENSOR TO SHUNT DOOR FORCED ALARM.

CONFIRM PoE SOURCE SUFFICIENT FOR LOAD.

FREE EGRESS AT ALL TIMES.

DATE DRAWN: 09-09-20 | REVISION DATE: 3-2-22

ALLEGION™

TITLE: SCHLAGE RC CONTROLLER WITH MEL, AO, MOTION SENSOR, DPS PAIR OF DOORS

DRAWING TYPE: RISER DIAGRAM

DWG NO: 113740R

DRAWN/CHECKED BY: DOVE/TAMARCHENKO

REV B

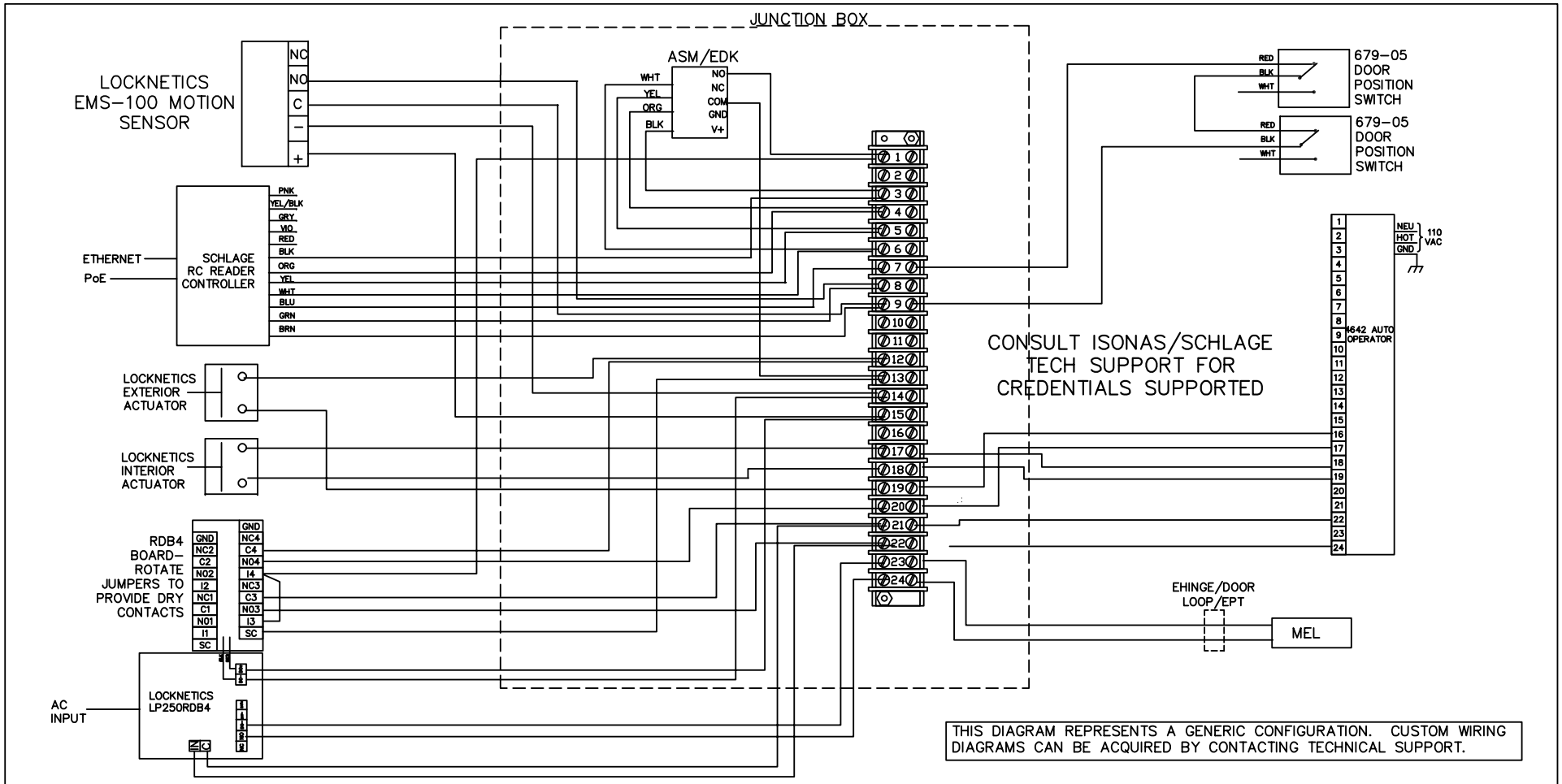

NOTES:
1) ALL LOW VOLTAGE WIRING TO BE STANDARD, MULTI-CONDUCTOR COLOR CODED WITHOUT SPLICES.

2) WIRING TO CONFORM TO APPLICABLE NATIONAL, STATE AND LOCAL ELECTRICAL CODES.

3) REFER TO SPECIFIC PRODUCT INSTALLATION INSTRUCTIONS FOR SPECIFIC WIRING REQUIREMENTS.

4) THIS DRAWING IS FOR GRAPHICAL REPRESENTATION OF PRODUCTS DETAILED IN THE HARDWARE SET ONLY.

5) * CONDUCTOR COUNT TO BE DETERMINED BY ACCESS CONTROL PANEL PROVIDER.

HARDWARE USED:
- SCHLAGE RC CONTROLLER
- SCHLAGE RC PIGTAIL
- SCHLAGE ASM/EDK MODULE
- LOCKNETICS EMS-100 MOTION SENSOR
- 1 FALCON MEL 24/25 EXIT DEVICES
- 2 DOOR LOOP OR EHINGE OR EPT
- LCN 4600 AO
- 2 LOCKNETICS PPH ACTUATORS
- LOCKNETICS LP250RDB4
- 2 679-05 DPS
- 1 12VDC DPDT RELAY
- JUNCTION BOX

OPERATION:
DOORS NORMALLY CLOSED AND LOCKED.

ENTRY BY VALID CREDENTIAL OR KEY OVERRIDE. CREDENTIAL SIGNALS MEL LATCH RETRACTION ON RHR LEAF PANIC DEVICE AND ENABLES EXTERIOR ACTUATOR. INTERIOR ACTUATOR ALWAYS ACTIVE.

EMS-100 MOTION SENSOR TO SHUNT DOOR FORCED ALARM.

CONFIRM PoE SOURCE SUFFICIENT FOR LOAD.

FREE EGRESS AT ALL TIMES.

DATE DRAWN: 09-09-20

REVISION DATE: 3-2-22

ALLEGION™

TITLE:
SCHLAGE RC CONTROLLER WITH MEL, AO, MOTION SENSOR, DPS PAIR OF DOORS

DRAWING TYPE: WIRING DIAGRAM

DWG NO: 113740W

DRAWN/CHECKED BY: DOVE/TAMARCHENKO

REV B

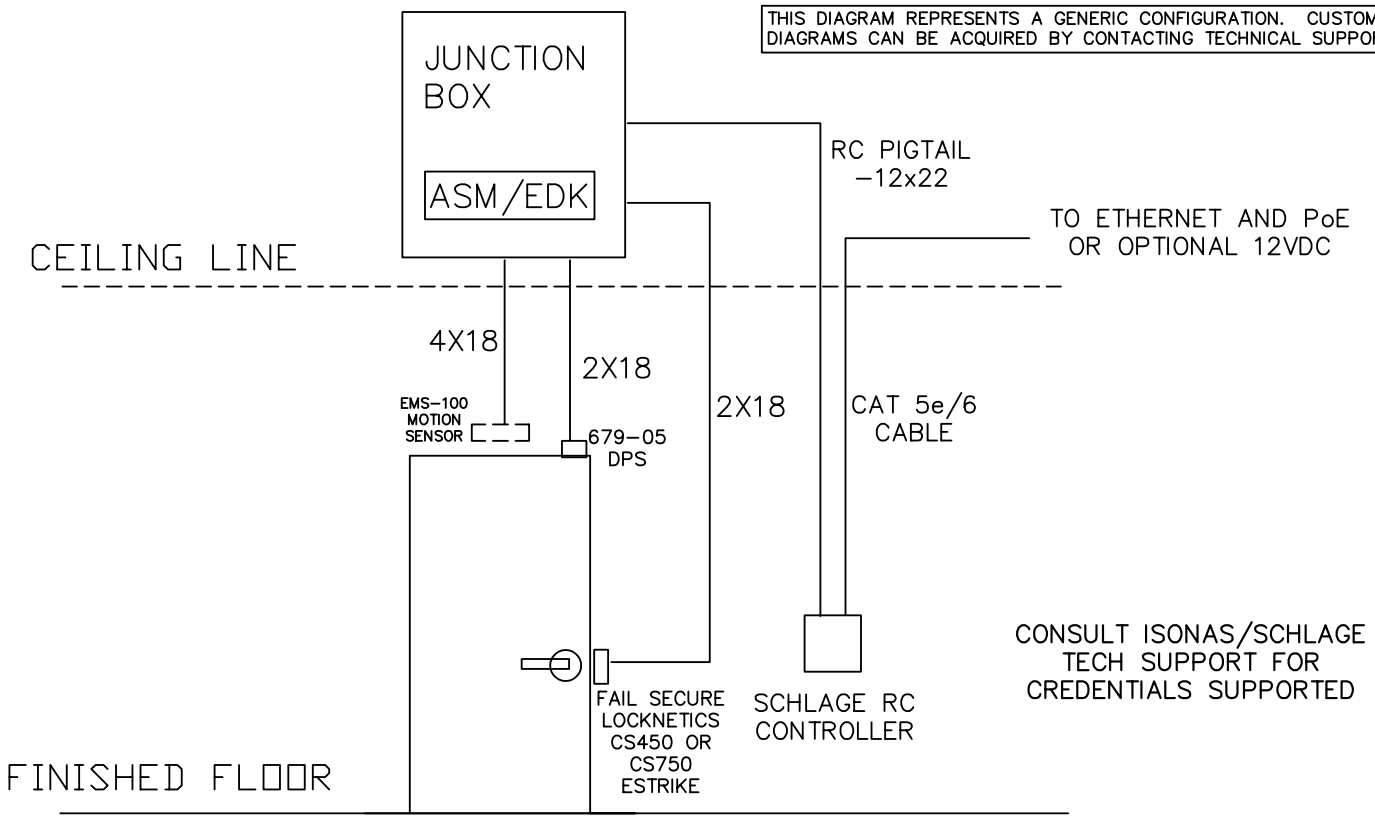

NOTES:
1) ALL LOW VOLTAGE WIRING TO BE STANDARD, MULTI-CONDUCTOR COLOR CODED WITHOUT SPLICES.

2) WIRING TO CONFORM TO APPLICABLE NATIONAL, STATE AND LOCAL ELECTRICAL CODES.

3) REFER TO SPECIFIC PRODUCT INSTALLATION INSTRUCTIONS FOR SPECIFIC WIRING REQUIREMENTS.

4) THIS DRAWING IS FOR GRAPHICAL REPRESENTATION OF PRODUCTS DETAILED IN THE HARDWARE SET ONLY.

5) * CONDUCTOR COUNT TO BE DETERMINED BY ACCESS CONTROL PANEL PROVIDER.

HARDWARE USED:
- SCHLAGE RC CONTROLLER
- SCHLAGE RC PIGTAIL
- SCHLAGE ASM/EDK MODULE
- LOCKNETICS CS 450-750 STRIKE
- LOCKNETICS EMS-100 MOTION SENSOR
- SCHLAGE 679-05 DPS
- JUNCTION BOX

OPERATION:
DOORS NORMALLY CLOSED AND LOCKED

ENTRY BY VALID CREDENTIAL OR KEY OVERRIDE

MOTION SENSOR TO SHUNT DOOR FORCED ALARM

FREE EGRESS AT ALL TIMES

DATE DRAWN: 10-08-20

REVISION DATE: 3-3-22

ALLEGION™

TITLE: SCHLAGE RC CONTROLLER WITH ESTRIKE-SINGLE DOOR

DRAWING TYPE: RISER DIAGRAM

DWG NO: 113749R

DRAWN/CHECKED BY: DOVE/TAMARCHENKO

REV B

THIS DIAGRAM REPRESENTS A GENERIC CONFIGURATION. CUSTOM WIRING DIAGRAMS CAN BE ACQUIRED BY CONTACTING TECHNICAL SUPPORT.

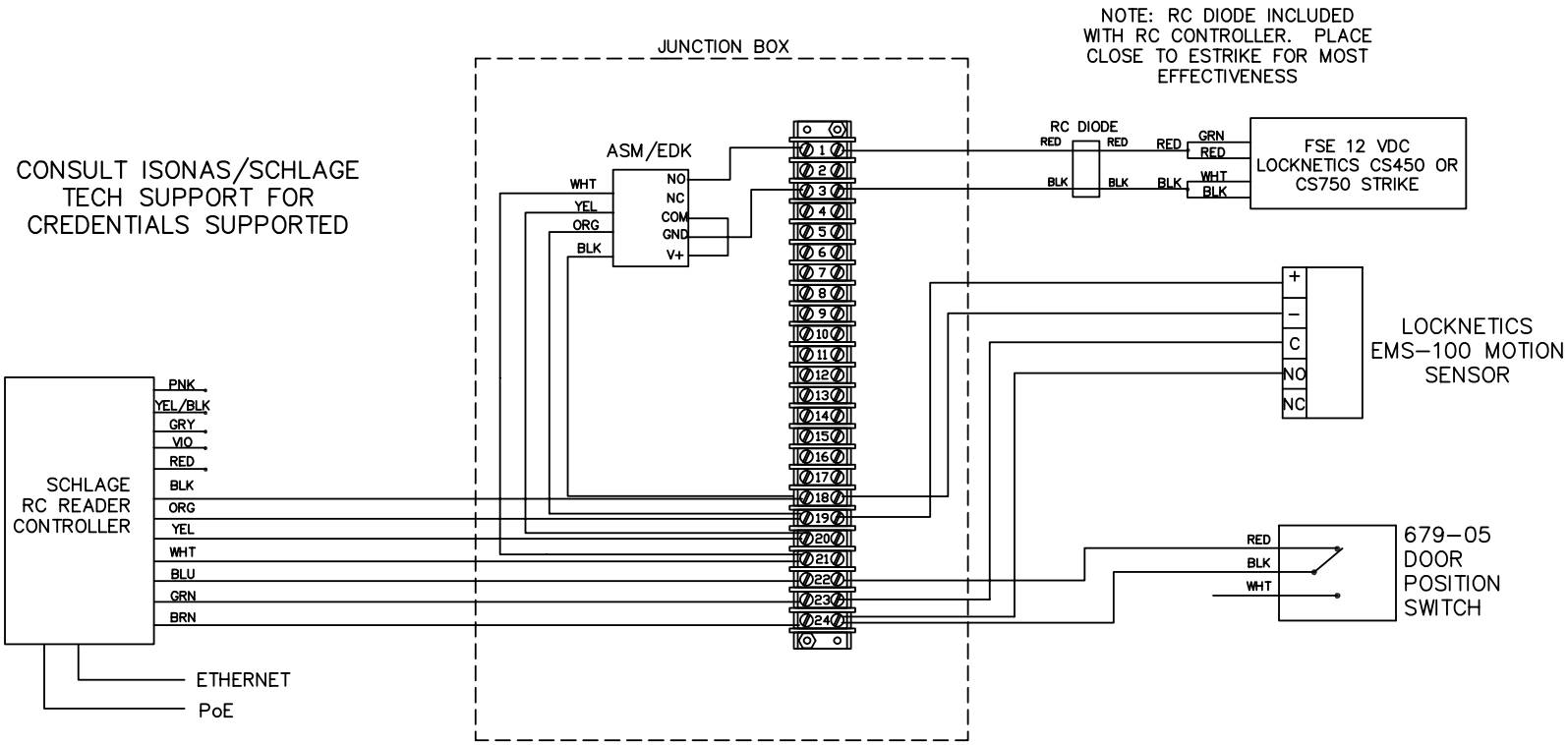

NOTES:
1) ALL LOW VOLTAGE WIRING TO BE STANDARD, MULTI-CONDUCTOR COLOR CODED WITHOUT SPLICES.

2) WIRING TO CONFORM TO APPLICABLE NATIONAL, STATE AND LOCAL ELECTRICAL CODES.

3) REFER TO SPECIFIC PRODUCT INSTALLATION INSTRUCTIONS FOR SPECIFIC WIRING REQUIREMENTS.

4) THIS DRAWING IS FOR GRAPHICAL REPRESENTATION OF PRODUCTS DETAILED IN THE HARDWARE SET ONLY.

HARDWARE USED:

SCHLAGE RC CONTROLLER
SCHLAGE RC PIGTAIL
SCHLAGE ASM/EDK MODULE
LOCKNETICS CS 450-750 STRIKE
LOCKNETICS EMS-100 MOTION SENSOR
SCHLAGE 679-05 DPS
JUNCTION BOX

OPERATION:
DOORS NORMALLY CLOSED AND LOCKED

ENTRY BY VALID CREDENTIAL OR KEY OVERRIDE

MOTION SENSOR TO SHUNT DOOR FORCED ALARM

FREE EGRESS AT ALL TIMES

DATE DRAWN: 10-08-20

REVISION DATE: 3-3-22

ALLEGION™

TITLE: SCHLAGE RC CONTROLLER WITH ESTRIKE-SINGLE DOOR

DRAWING TYPE: WIRING DIAGRAM

DWG NO: 113749W

DRAWN/CHECKED BY: DOVE/TAMARCHENKO

REV B

THIS DIAGRAM REPRESENTS A GENERIC CONFIGURATION. CUSTOM WIRING DIAGRAMS CAN BE ACQUIRED BY CONTACTING TECHNICAL SUPPORT.

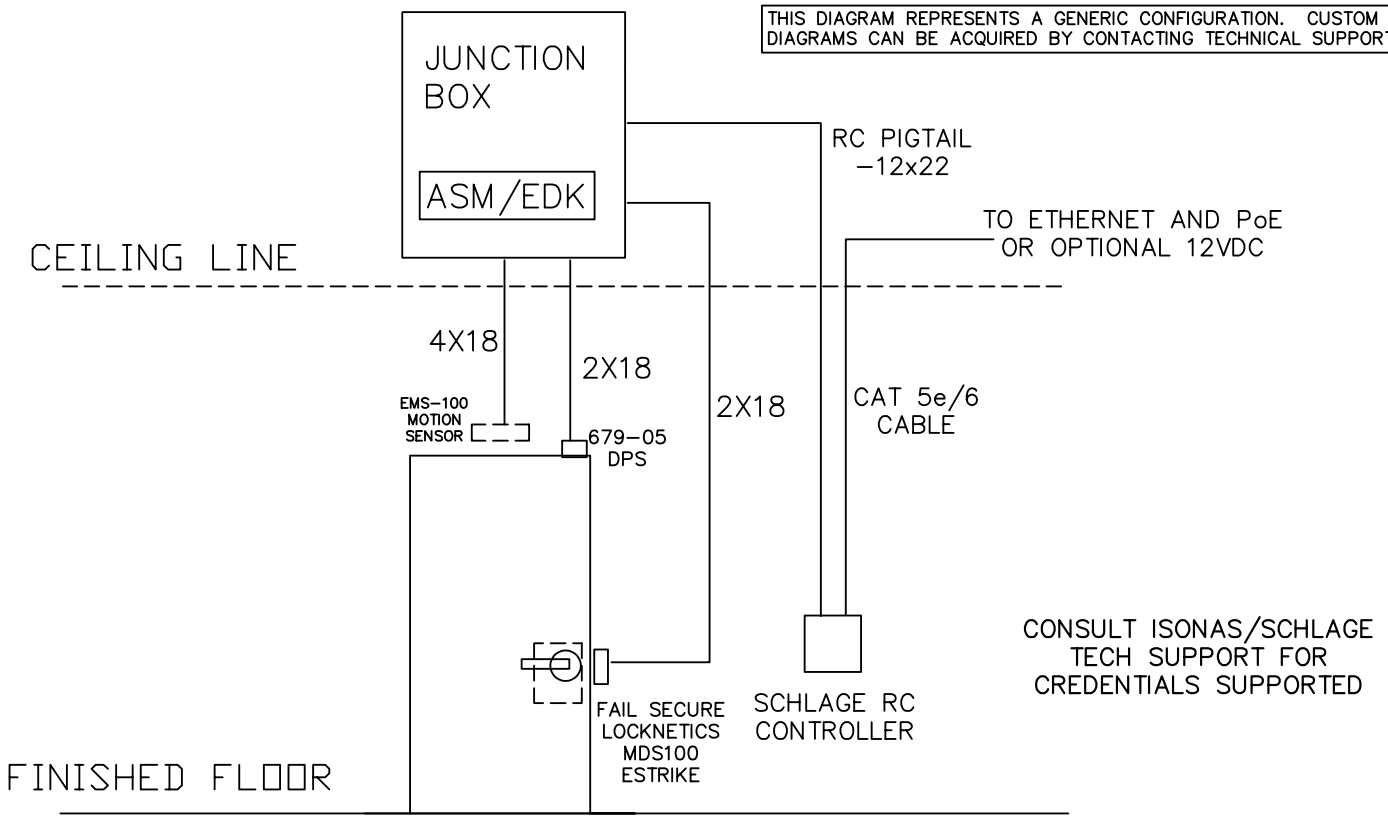

NOTES:
1) ALL LOW VOLTAGE WIRING TO BE STANDARD, MULTI-CONDUCTOR COLOR CODED WITHOUT SPLICES.

2) WIRING TO CONFORM TO APPLICABLE NATIONAL, STATE AND LOCAL ELECTRICAL CODES.

3) REFER TO SPECIFIC PRODUCT INSTALLATION INSTRUCTIONS FOR SPECIFIC WIRING REQUIREMENTS.

4) THIS DRAWING IS FOR GRAPHICAL REPRESENTATION OF PRODUCTS DETAILED IN THE HARDWARE SET ONLY.

5) * CONDUCTOR COUNT TO BE DETERMINED BY ACCESS CONTROL PANEL PROVIDER.

HARDWARE USED:
- SCHLAGE RC CONTROLLER
- SCHLAGE RC PIGTAIL
- SCHLAGE ASM/EDK MODULE
- LOCKNETICS MDS100 STRIKE
- LOCKNETICS EMS-100 MOTION SENSOR
- SCHLAGE 679-05 DPS
- JUNCTION BOX

OPERATION:
DOORS NORMALLY CLOSED AND LOCKED

ENTRY BY VALID CREDENTIAL OR KEY OVERRIDE

MOTION SENSOR TO SHUNT DOOR FORCED ALARM

FREE EGRESS AT ALL TIMES

DATE DRAWN: 10-08-20

REVISION DATE: 3-3-22

ALLEGION™

TITLE: SCHLAGE RC CONTROLLER WITH ESTRIKE-SINGLE DOOR

DRAWING TYPE: RISER DIAGRAM

DWG NO: 113750R

REV: B

DRAWN/CHECKED BY: DOVE/TAMARCHENKO

THIS DIAGRAM REPRESENTS A GENERIC CONFIGURATION. CUSTOM WIRING DIAGRAMS CAN BE ACQUIRED BY CONTACTING TECHNICAL SUPPORT.

NOTE: RC DIODE INCLUDED WITH RC CONTROLLER. PLACE CLOSE TO RELAY FOR MOST EFFECTIVENESS

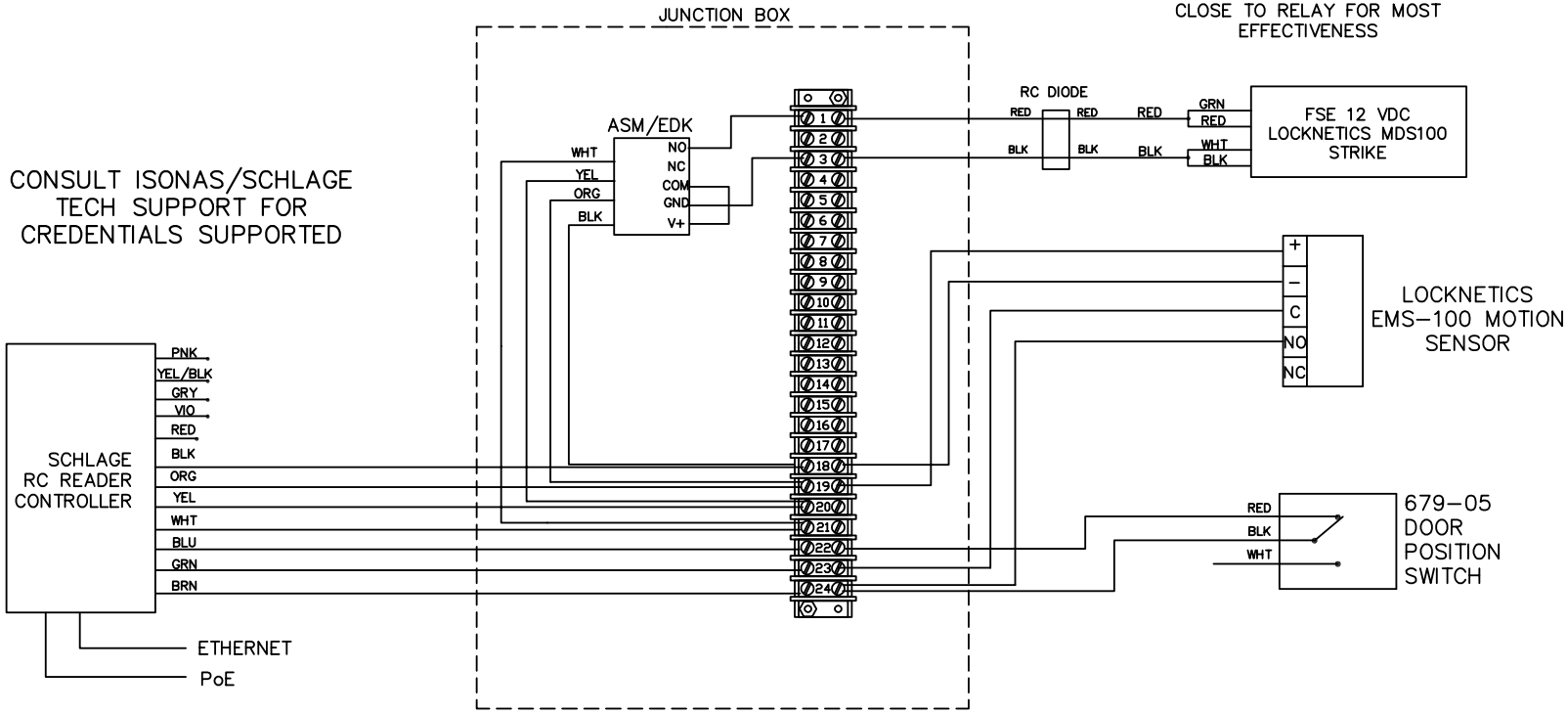

NOTES:
1) ALL LOW VOLTAGE WIRING TO BE STANDARD, MULTI-CONDUCTOR COLOR CODED WITHOUT SPLICES.

2) WIRING TO CONFORM TO APPLICABLE NATIONAL, STATE AND LOCAL ELECTRICAL CODES.

3) REFER TO SPECIFIC PRODUCT INSTALLATION INSTRUCTIONS FOR SPECIFIC WIRING REQUIREMENTS.

4) THIS DRAWING IS FOR GRAPHICAL REPRESENTATION OF PRODUCTS DETAILED IN THE HARDWARE SET ONLY.

HARDWARE USED:

SCHLAGE RC CONTROLLER
SCHLAGE RC PIGTAIL
SCHLAGE ASM/EDK MODULE
LOCKNETICS MDS100 STRIKE
LOCKNETICS EMS-100 MOTION SENSOR
SCHLAGE 679-05 DPS
JUNCTION BOX

OPERATION:
DOORS NORMALLY CLOSED AND LOCKED

ENTRY BY VALID CREDENTIAL OR KEY OVERRIDE

MOTION SENSOR TO SHUNT DOOR FORCED ALARM

FREE EGRESS AT ALL TIMES

DATE DRAWN: 10-08-20

REVISION DATE: 3-3-22

ALLEGION™

TITLE: SCHLAGE RC CONTROLLER WITH ESTRIKE-SINGLE DOOR

DRAWING TYPE: WIRING DIAGRAM

DWG NO: 113750W

DRAWN/CHECKED BY: DOVE/TAMARCHENKO

REV B

THIS DIAGRAM REPRESENTS A GENERIC CONFIGURATION. CUSTOM WIRING DIAGRAMS CAN BE ACQUIRED BY CONTACTING TECHNICAL SUPPORT.

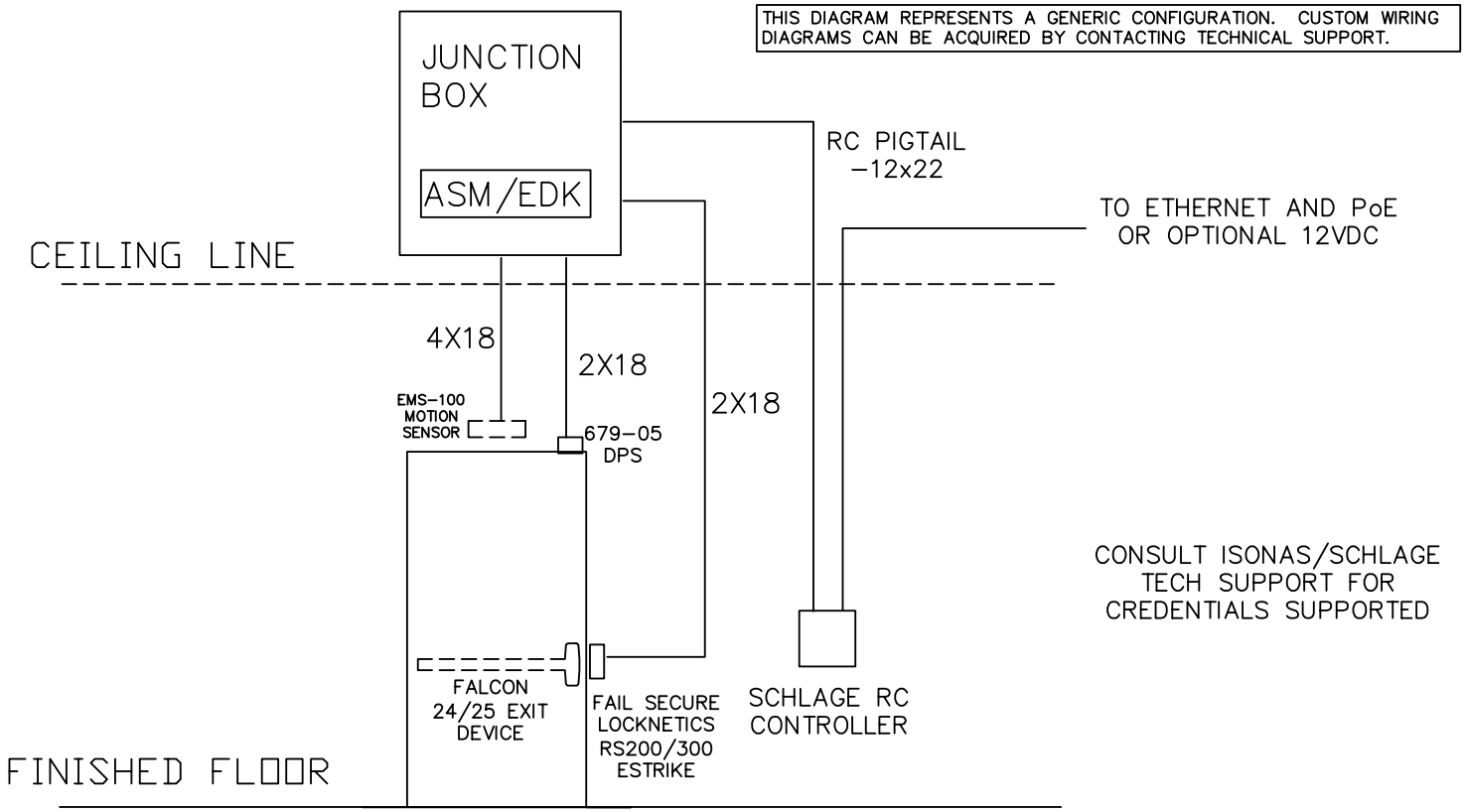

NOTES:
1) ALL LOW VOLTAGE WIRING TO BE STANDARD, MULTI-CONDUCTOR COLOR CODED WITHOUT SPLICES.

2) WIRING TO CONFORM TO APPLICABLE NATIONAL, STATE AND LOCAL ELECTRICAL CODES.

3) REFER TO SPECIFIC PRODUCT INSTALLATION INSTRUCTIONS FOR SPECIFIC WIRING REQUIREMENTS.

4) THIS DRAWING IS FOR GRAPHICAL REPRESENTATION OF PRODUCTS DETAILED IN THE HARDWARE SET ONLY.

5) * CONDUCTOR COUNT TO BE DETERMINED BY ACCESS CONTROL PANEL PROVIDER.

HARDWARE USED:
- SCHLAGE RC CONTROLLER
- SCHLAGE RC PIGTAIL
- SCHLAGE ASM/EDK MODULE
- LOCKNETICS RS200-RS300 STRIKE
- LOCKNETICS EMS-100 MOTION SENSOR
- SCHLAGE 679-05 DPS
- JUNCTION BOX

OPERATION:
DOORS NORMALLY CLOSED AND LOCKED.

ENTRY BY VALID CREDENTIAL OR KEY OVERRIDE.

MOTION SENSOR TO SHUNT DOOR FORCED ALARM.

FREE EGRESS AT ALL TIMES.

DATE DRAWN: 10-14-20

REVISION DATE: 3-3-22

ALLEGION™

TITLE: SCHLAGE RC CONTROLLER WITH ESTRIKE RIM PANIC-SINGLE DOOR

DRAWING TYPE: RISER DIAGRAM

DWG NO: 113751R

DRAWN/CHECKED BY: DOVE/TAMARCHENKO

REV B

THIS DIAGRAM REPRESENTS A GENERIC CONFIGURATION. CUSTOM WIRING DIAGRAMS CAN BE ACQUIRED BY CONTACTING TECHNICAL SUPPORT.

NOTE: RC DIODE INCLUDED WITH RC CONTROLLER. PLACE CLOSE TO RELAY FOR MOST EFFECTIVENESS

CONSULT ISONAS/SCHLAGE TECH SUPPORT FOR CREDENTIALS SUPPORTED

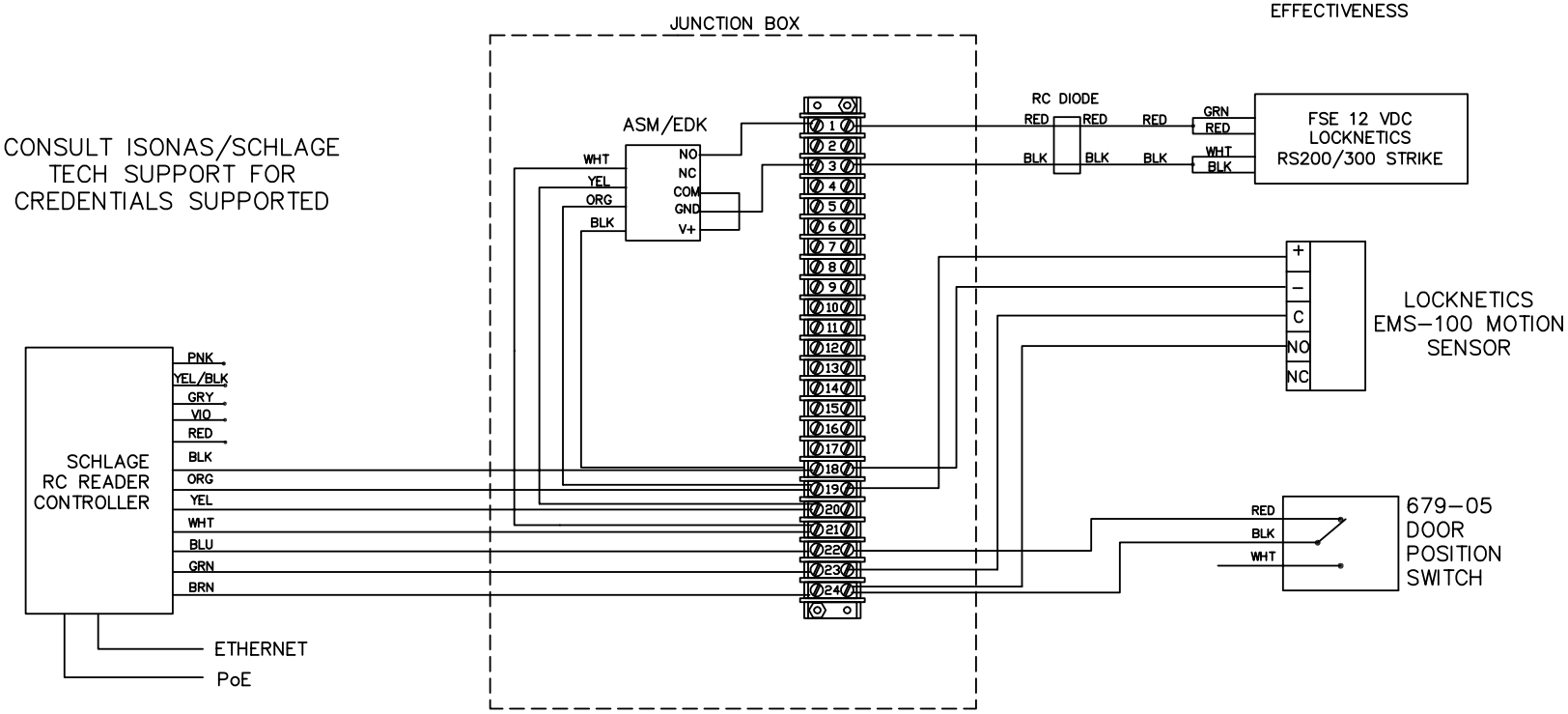

NOTES:
1) ALL LOW VOLTAGE WIRING TO BE STANDARD, MULTI-CONDUCTOR COLOR CODED WITHOUT SPLICES.

2) WIRING TO CONFORM TO APPLICABLE NATIONAL, STATE AND LOCAL ELECTRICAL CODES.

3) REFER TO SPECIFIC PRODUCT INSTALLATION INSTRUCTIONS FOR SPECIFIC WIRING REQUIREMENTS.

4) THIS DRAWING IS FOR GRAPHICAL REPRESENTATION OF PRODUCTS DETAILED IN THE HARDWARE SET ONLY.

HARDWARE USED:
- SCHLAGE RC CONTROLLER
- SCHLAGE RC PIGTAIL
- SCHLAGE ASM/EDK MODULE
- LOCKNETICS RS200-RS300 STRIKE
- LOCKNETICS EMS-100 MOTION SENSOR
- SCHLAGE 679-05 DPS
- JUNCTION BOX

OPERATION:
DOORS NORMALLY CLOSED AND LOCKED.

ENTRY BY VALID CREDENTIAL OR KEY OVERRIDE.

MOTION SENSOR TO SHUNT DOOR FORCED ALARM.

FREE EGRESS AT ALL TIMES.

DATE DRAWN: 10-14-20

REVISION DATE: 3-3-22

ALLEGION™

TITLE: SCHLAGE RC CONTROLLER WITH ESTRIKE RIM PANIC-SINGLE DOOR

DRAWING TYPE: WIRING DIAGRAM

DWG NO: 113751W

DRAWN/CHECKED BY: DOVE/TAMARCHENKO

REV B

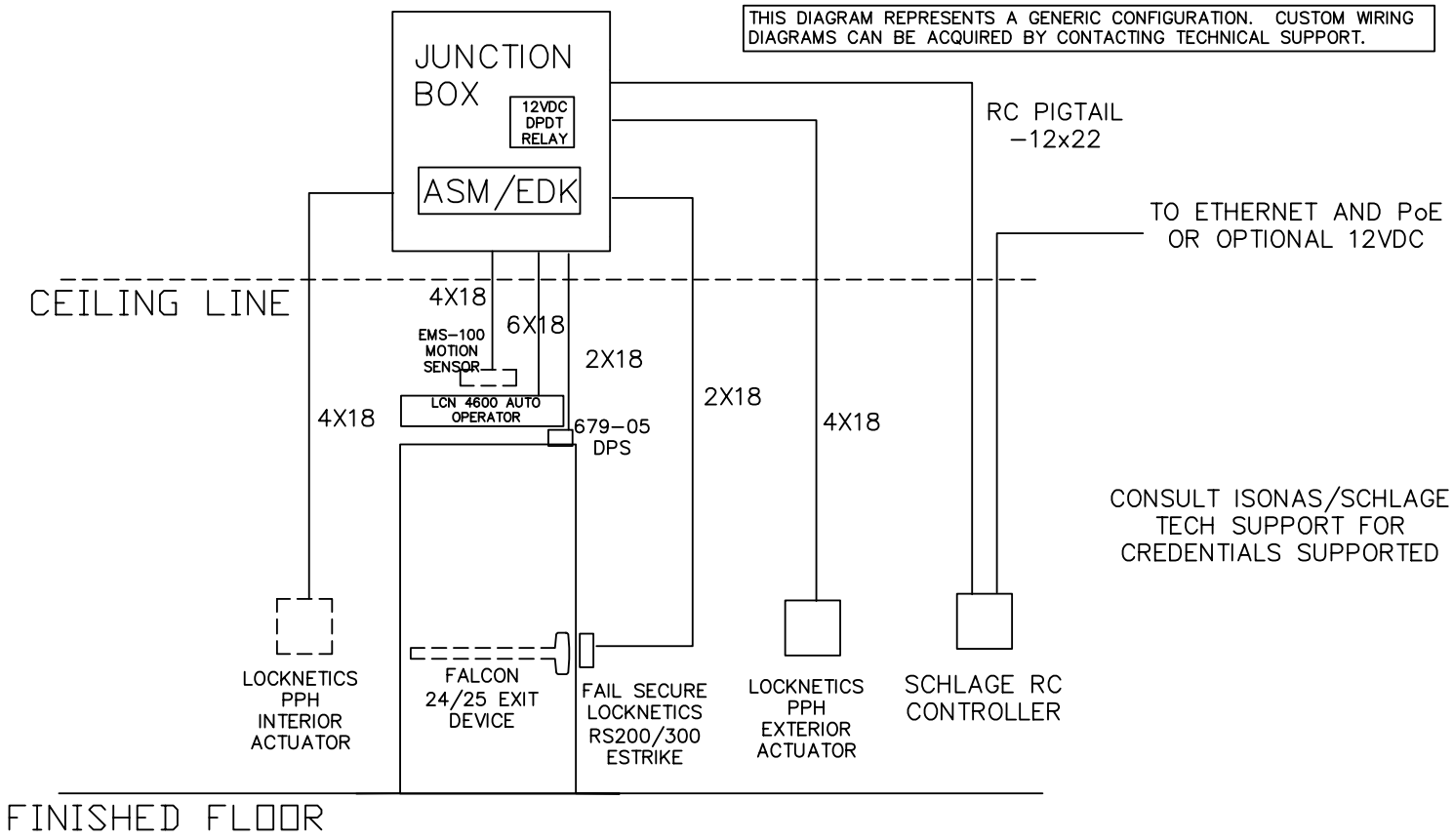

NOTES:
1) ALL LOW VOLTAGE WIRING TO BE STANDARD, MULTI-CONDUCTOR COLOR CODED WITHOUT SPLICES.

2) WIRING TO CONFORM TO APPLICABLE NATIONAL, STATE AND LOCAL ELECTRICAL CODES.

3) REFER TO SPECIFIC PRODUCT INSTALLATION INSTRUCTIONS FOR SPECIFIC WIRING REQUIREMENTS.

4) THIS DRAWING IS FOR GRAPHICAL REPRESENTATION OF PRODUCTS DETAILED IN THE HARDWARE SET ONLY.

5) * CONDUCTOR COUNT TO BE DETERMINED BY ACCESS CONTROL PANEL PROVIDER.

HARDWARE USED:
SCHLAGE RC CONTROLLER
SCHLAGE RC PIGTAIL
SCHLAGE ASM/EDK MODULE
LOCKNETICS RS200/300 ESTRIKE
LOCKNETICS EMS-100 MOTION SENSOR
SCHLAGE 679-05 DPS
12 VDC DPDT RELAY
LCN 4600 AUTO OPERATOR
2 LOCKNETICS PPH ACUTUATORS
JUNCTION BOX

OPERATION:
DOORS NORMALLY CLOSED AND LOCKED.

ENTRY BY VALID CREDENTIAL OR KEY OVERRIDE AND WILL ENABLE EXTERIOR ACTUATOR TO OPEN DOOR VIA AUTO OPERATOR.

INTERIOR ACTUATOR ALWAYS ACTIVE.

MOTION SENSOR TO SHUNT DOOR FORCED ALARM.

FREE EGRESS AT ALL TIMES.

DATE DRAWN: 10-15-20
REVISION DATE: 3-3-22

ALLEGION™

TITLE: SCHLAGE RC CONTROLLER, ESTRIKE AO, DPS, MOTION SENSOR, SINGLE DOOR

DRAWING TYPE: RISER DIAGRAM
DWG NO: 113752R
DRAWN/CHECKED BY: DOVE/TAMARCHENKO
REV B

THIS DIAGRAM REPRESENTS A GENERIC CONFIGURATION. CUSTOM WIRING DIAGRAMS CAN BE ACQUIRED BY CONTACTING TECHNICAL SUPPORT.

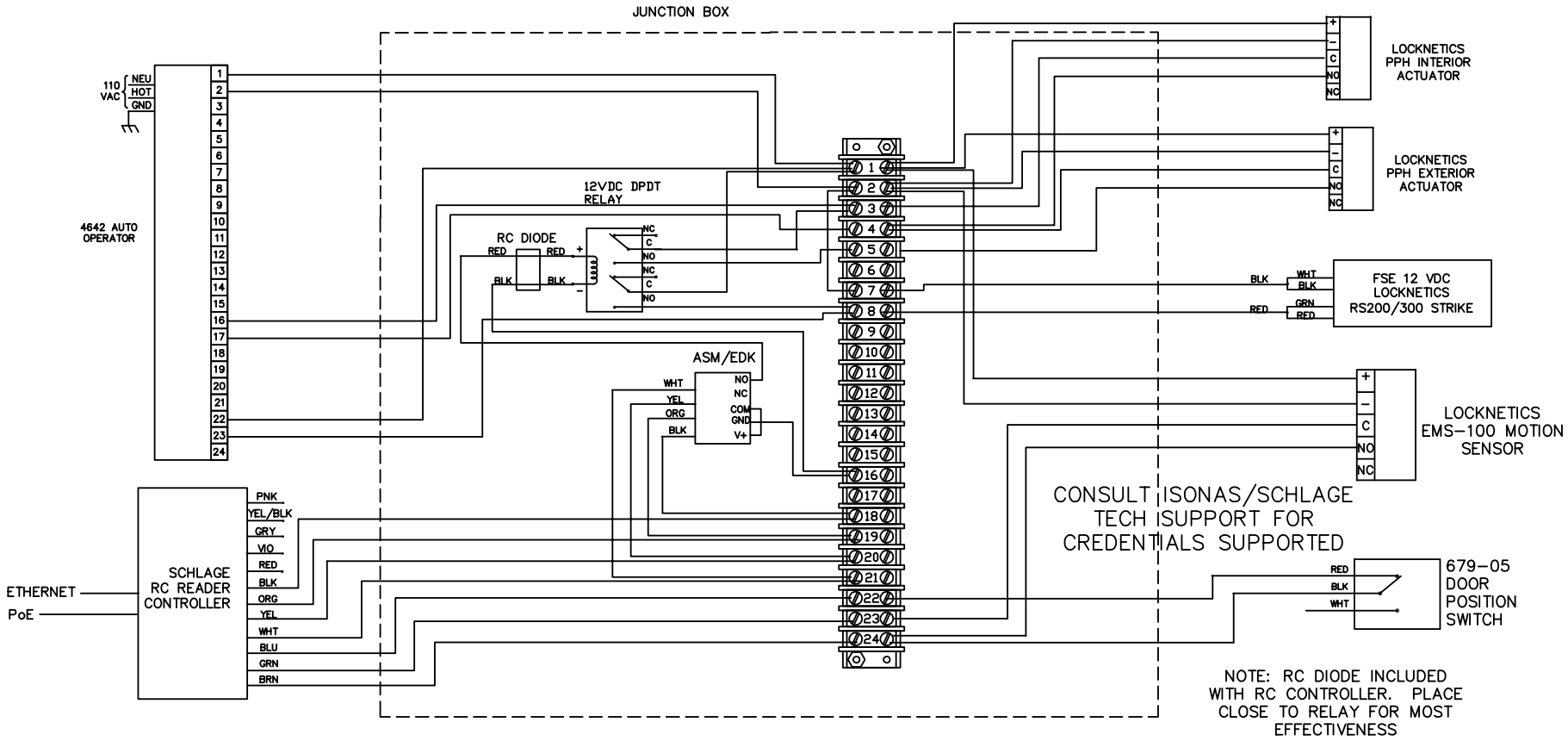

NOTES:
1) ALL LOW VOLTAGE WIRING TO BE STANDARD, MULTI-CONDUCTOR COLOR CODED WITHOUT SPLICES.

2) WIRING TO CONFORM TO APPLICABLE NATIONAL, STATE AND LOCAL ELECTRICAL CODES.

3) REFER TO SPECIFIC PRODUCT INSTALLATION INSTRUCTIONS FOR SPESCIFIC WIRING REQUIREMENTS.

4) THIS DRAWING IS FOR GRAPHICAL REPRESENTATION OF PRODUCTS DETAILED IN THE HARDWARE SET ONLY.

HARDWARE USED:

SCHLAGE RC CONTROLLER
SCHLAGE RC PIGTAIL
SCHLAGE ASM/EDK MODULE
LOCKNETICS RS200/300 ESTRIKE
LOCKNETICS EMS-100 MOTION SENSOR
SCHLAGE 679-05 DPS
12 VDC DPDT RELAY
LCN 4600 AUTO OPERATOR
2 LOCKNETICS PPH ACUTUATORS
JUNCTION BOX

OPERATION:
DOORS NORMALLY CLOSED AND LOCKED

ENTRY BY VALID CREDENTIAL OR KEY OVERRIDE AND WILL ENABLE EXTERIOR ACTUATOR TO OPEN DOOR VIA AUTO OPERATOR.

INTERIOR ACTUATOR ALWAYS ACTIVE.

MOTION SENSOR TO SHUNT DOOR FORCED ALARM

FREE EGRESS AT ALL TIMES

DATE DRAWN: 10-15-20

REVISION DATE: 3-3-22

ALLEGION™

TITLE: SCHLAGE RC CONTROLLER, ESTRIKE AO, DPS, MOTION SENSOR, SINGLE DOOR

DRAWING TYPE: WIRING DIAGRAM

DWG NO: 113752W

DRAWN/CHECKED BY: DOVE/TAMARCHENKO

REV B

THIS DIAGRAM REPRESENTS A GENERIC CONFIGURATION. CUSTOM WIRING DIAGRAMS CAN BE ACQUIRED BY CONTACTING TECHNICAL SUPPORT.

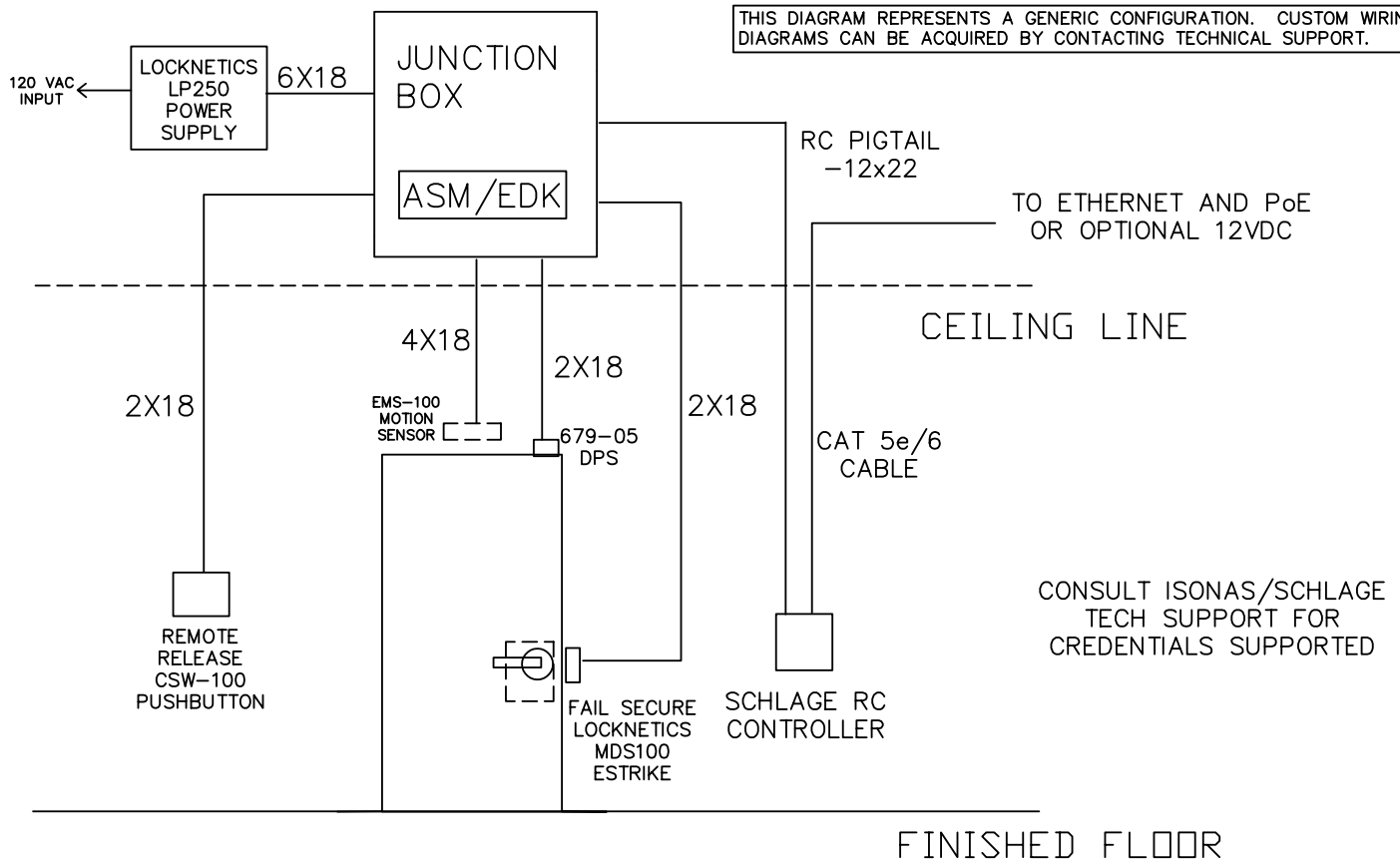

NOTES:
1) ALL LOW VOLTAGE WIRING TO BE STANDARD, MULTI-CONDUCTOR COLOR CODED WITHOUT SPLICES.

2) WIRING TO CONFORM TO APPLICABLE NATIONAL, STATE AND LOCAL ELECTRICAL CODES.

3) REFER TO SPECIFIC PRODUCT INSTALLATION INSTRUCTIONS FOR SPECIFIC WIRING REQUIREMENTS.

4) THIS DRAWING IS FOR GRAPHICAL REPRESENTATION OF PRODUCTS DETAILED IN THE HARDWARE SET ONLY.

5) * CONDUCTOR COUNT TO BE DETERMINED BY ACCESS CONTROL PANEL PROVIDER.

HARDWARE USED:
- SCHLAGE RC CONTROLLER
- SCHLAGE RC PIGTAIL
- SCHLAGE ASM/EDK MODULE
- LOCKNETICS MDS100 STRIKE
- LOCKNETICS EMS-100 MOTION SENSOR
- SCHLAGE 679-05 DPS
- LOCKNETICS CSW100 REMOTE RELEASE
- LOCKNETICS LP250 POWER SUPPLY
- JUNCTION BOX

OPERATION:
DOORS NORMALLY CLOSED AND LOCKED.

ENTRY BY VALID CREDENTIAL OR KEY OVERRIDE.

REMOTE RELEASE VIA CSW100 PUSHBUTTON.

MOTION SENSOR TO SHUNT DOOR FORCED ALARM .

FREE EGRESS AT ALL TIMES.

DATE DRAWN: 10-15-20

REVISION DATE: 3-2-22

ALLEGION™

TITLE: SCHLAGE RC CONTROLLER, ESTRIKE, REMOTE RELEASE MOTION SENSOR, DPS-SINGLE DOOR

DRAWING TYPE: RISER DIAGRAM

DWG NO: 113753R

DRAWN/CHECKED BY: DOVE/TAMARCHENKO

REV B

THIS DIAGRAM REPRESENTS A GENERIC CONFIGURATION. CUSTOM WIRING DIAGRAMS CAN BE ACQUIRED BY CONTACTING TECHNICAL SUPPORT.

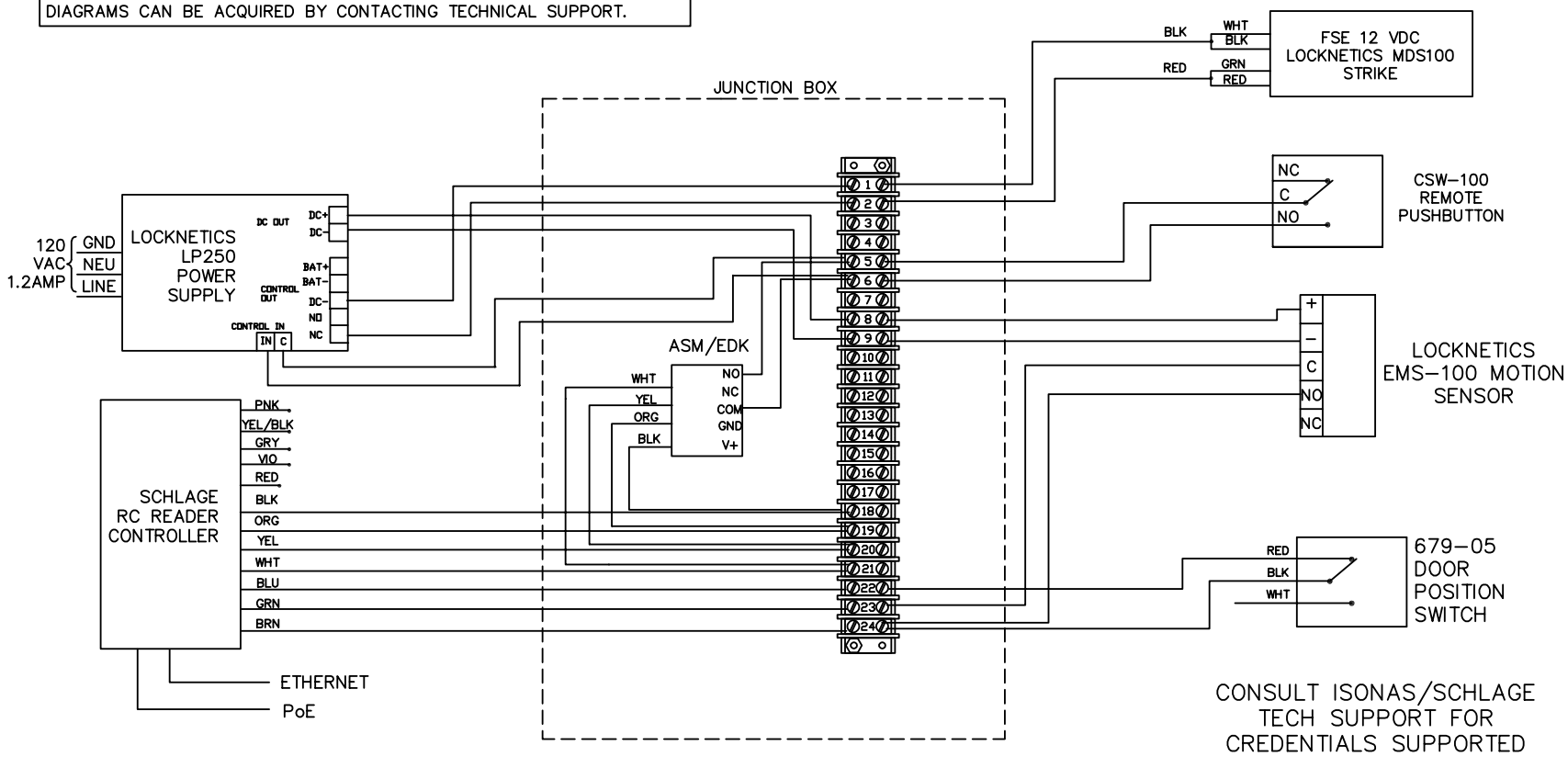

NOTES:
1) ALL LOW VOLTAGE WIRING TO BE STANDARD, MULTI-CONDUCTOR COLOR CODED WITHOUT SPLICES.

2) WIRING TO CONFORM TO APPLICABLE NATIONAL, STATE AND LOCAL ELECTRICAL CODES.

3) REFER TO SPECIFIC PRODUCT INSTALLATION INSTRUCTIONS FOR SPECIFIC WIRING REQUIREMENTS.

4) THIS DRAWING IS FOR GRAPHICAL REPRESENTATION OF PRODUCTS DETAILED IN THE HARDWARE SET ONLY.

HARDWARE USED:
- SCHLAGE RC CONTROLLER
- SCHLAGE RC PIGTAIL
- SCHLAGE ASM/EDK MODULE
- LOCKNETICS MDS100 STRIKE
- LOCKNETICS EMS-100 MOTION SENSOR
- SCHLAGE 679-05 DPS
- LOCKNETICS CSW100 REMOTE RELEASE
- LOCKNETICS LP250 POWER SUPPLY
- JUNCTION BOX

OPERATION:
DOORS NORMALLY CLOSED AND LOCKED.

ENTRY BY VALID CREDENTIAL OR KEY OVERRIDE.

REMOTE RELEASE VIA CSW100 PUSHBUTTON.

MOTION SENSOR TO SHUNT DOOR FORCED ALARM.

FREE EGRESS AT ALL TIMES.

DATE DRAWN: 10-15-20

REVISION DATE: 3-2-22

ALLEGION™

TITLE: SCHLAGE RC CONTROLLER, ESTRIKE, REMOTE RELEASE MOTION SENSOR, DPS-SINGLE DOOR

DRAWING TYPE: WIRING DIAGRAM

DWG NO: 113753W

DRAWN/CHECKED BY: DOVE/TAMARCHENKO

REV B

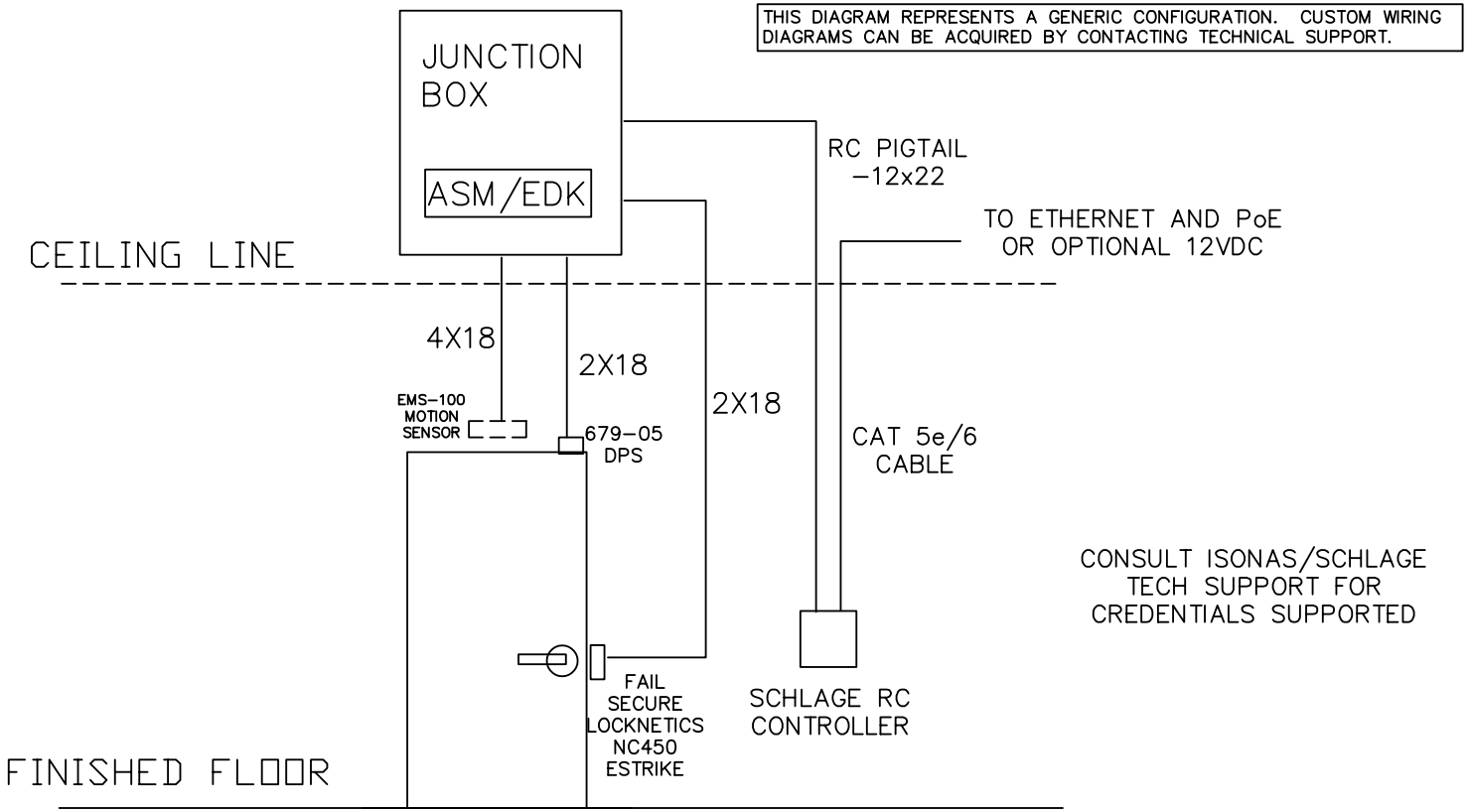

NOTES:
1) ALL LOW VOLTAGE WIRING TO BE STANDARD, MULTI-CONDUCTOR COLOR CODED WITHOUT SPLICES.

2) WIRING TO CONFORM TO APPLICABLE NATIONAL, STATE AND LOCAL ELECTRICAL CODES.

3) REFER TO SPECIFIC PRODUCT INSTALLATION INSTRUCTIONS FOR SPECIFIC WIRING REQUIREMENTS.

4) THIS DRAWING IS FOR GRAPHICAL REPRESENTATION OF PRODUCTS DETAILED IN THE HARDWARE SET ONLY.

5) * CONDUCTOR COUNT TO BE DETERMINED BY ACCESS CONTROL PANEL PROVIDER.

HARDWARE USED:
- SCHLAGE RC CONTROLLER
- SCHLAGE RC PIGTAIL
- SCHLAGE ASM/EDK MODULE
- LOCKNETICS NC450 NO CUT STRIKE
- LOCKNETICS EMS-100 MOTION SENSOR
- 679-05 DPS
- JUNCTION BOX

OPERATION:
DOORS NORMALLY CLOSED AND LOCKED

ENTRY BY VALID CREDENTIAL OR KEY OVERRIDE

MOTION SENSOR TO SHUNT DOOR FORCED ALARM

FREE EGRESS AT ALL TIMES

DATE DRAWN: 09-04-20

REVISION DATE: 3-3-22

ALLEGION™

TITLE: SCHLAGE RC CONTROLLER WITH ESTRIKE-SINGLE DOOR

DRAWING TYPE: RISER DIAGRAM

DWG NO: 113754R

DRAWN/CHECKED BY: DOVE/TAMARCHENKO

REV B

THIS DIAGRAM REPRESENTS A GENERIC CONFIGURATION. CUSTOM WIRING DIAGRAMS CAN BE ACQUIRED BY CONTACTING TECHNICAL SUPPORT.

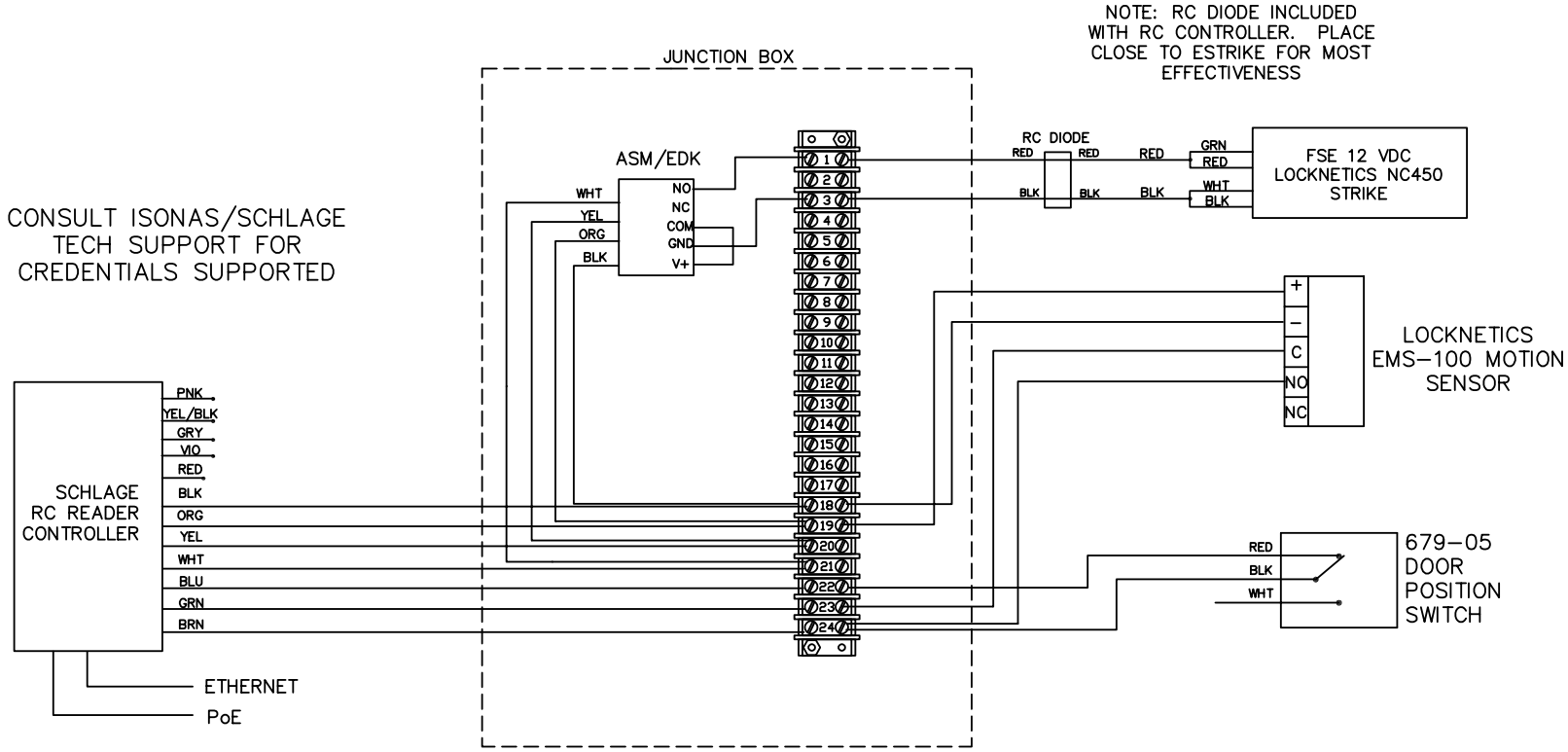

NOTES:
1) ALL LOW VOLTAGE WIRING TO BE STANDARD, MULTI-CONDUCTOR COLOR CODED WITHOUT SPLICES.

2) WIRING TO CONFORM TO APPLICABLE NATIONAL, STATE AND LOCAL ELECTRICAL CODES.

3) REFER TO SPECIFIC PRODUCT INSTALLATION INSTRUCTIONS FOR SPECIFIC WIRING REQUIREMENTS.

4) THIS DRAWING IS FOR GRAPHICAL REPRESENTATION OF PRODUCTS DETAILED IN THE HARDWARE SET ONLY.

HARDWARE USED:
- SCHLAGE RC CONTROLLER
- SCHLAGE RC PIGTAIL
- SCHLAGE ASM/EDK MODULE
- LOCKNETICS NC450 NO CUT STRIKE
- LOCKNETICS EMS-100 MOTION SENSOR
- 679-05 DPS
- JUNCTION BOX

OPERATION:
DOORS NORMALLY CLOSED AND LOCKED

ENTRY BY VALID CREDENTIAL OR KEY OVERRIDE

MOTION SENSOR TO SHUNT DOOR FORCED ALARM

FREE EGRESS AT ALL TIMES

DATE DRAWN: 09-04-20

REVISION DATE: 3-3-22

ALLEGION™

TITLE: SCHLAGE RC CONTROLLER WITH ESTRIKE-SINGLE DOOR

DRAWING TYPE: WIRING DIAGRAM

DWG NO: 113754W

DRAWN/CHECKED BY: DOVE/TAMARCHENKO

REV B

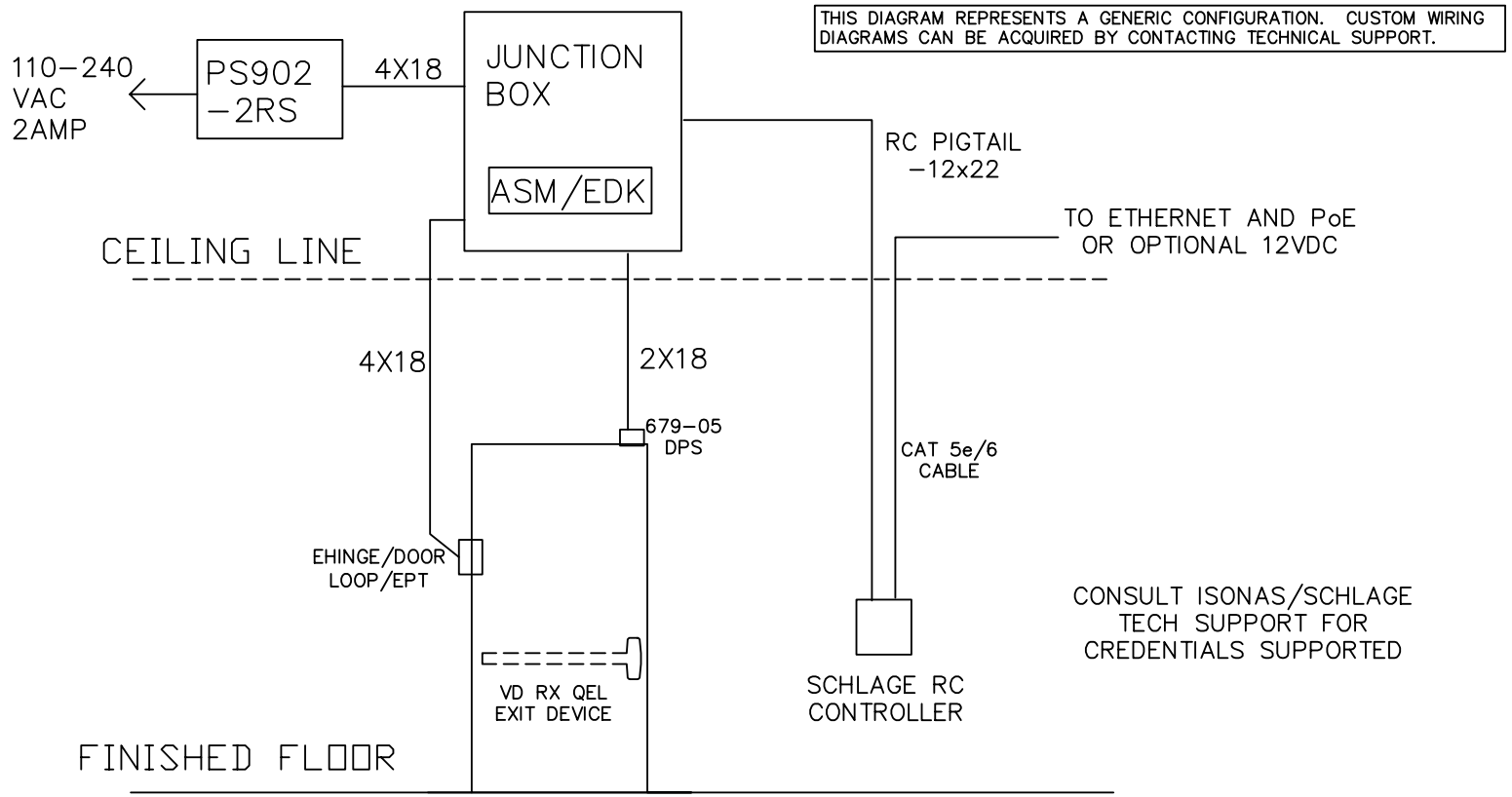

NOTES:
1) ALL LOW VOLTAGE WIRING TO BE STANDARD, MULTI-CONDUCTOR COLOR CODED WITHOUT SPLICES.

2) WIRING TO CONFORM TO APPLICABLE NATIONAL, STATE AND LOCAL ELECTRICAL CODES.

3) REFER TO SPECIFIC PRODUCT INSTALLATION INSTRUCTIONS FOR SPECIFIC WIRING REQUIREMENTS.

4) THIS DRAWING IS FOR GRAPHICAL REPRESENTATION OF PRODUCTS DETAILED IN THE HARDWARE SET ONLY.

5) * CONDUCTOR COUNT TO BE DETERMINED BY ACCESS CONTROL PANEL PROVIDER.

HARDWARE USED:
- SCHLAGE RC CONTROLLER
- SCHLAGE RC PIGTAIL
- SCHLAGE ASM/EDK MODULE
- VON DUPRIN RX QEL
- 33A/35A/98/99 RIM EXIT DEVICE
- DOOR LOOP OR EHINGE OR EPT
- VON DUPRIN PS902x900-2RS
- 679-05 DPS
- JUNCTION BOX

OPERATION:
DOORS NORMALLY CLOSED AND LOCKED.

ENTRY BY VALID CREDENTIAL OR KEY OVERRIDE. CREDENTIAL SIGNAL QEL LATCH RETRACTION ON PANIC DEVICE.

RX IN PANIC DEVICE TO SHUNT DOOR FORCED ALARM.

CONFIRM PoE SOURCE SUFFICIENT FOR LOAD.

FREE EGRESS AT ALL TIMES.

DATE DRAWN: 09-09-20 | REVISION DATE: 3-2-22

ALLEGION™

TITLE: SCHLAGE RC CONTROLLER WITH RX QEL EXIT -SINGLE DOOR

DRAWING TYPE: RISER DIAGRAM

DWG NO: 113755R

DRAWN/CHECKED BY: DOVE/TAMARCHENKO

REV B

CONSULT ISONAS/SCHLAGE
TECH SUPPORT FOR
CREDENTIALS SUPPORTED

THIS DIAGRAM REPRESENTS A GENERIC CONFIGURATION. CUSTOM WIRING DIAGRAMS CAN BE ACQUIRED BY CONTACTING TECHNICAL SUPPORT.

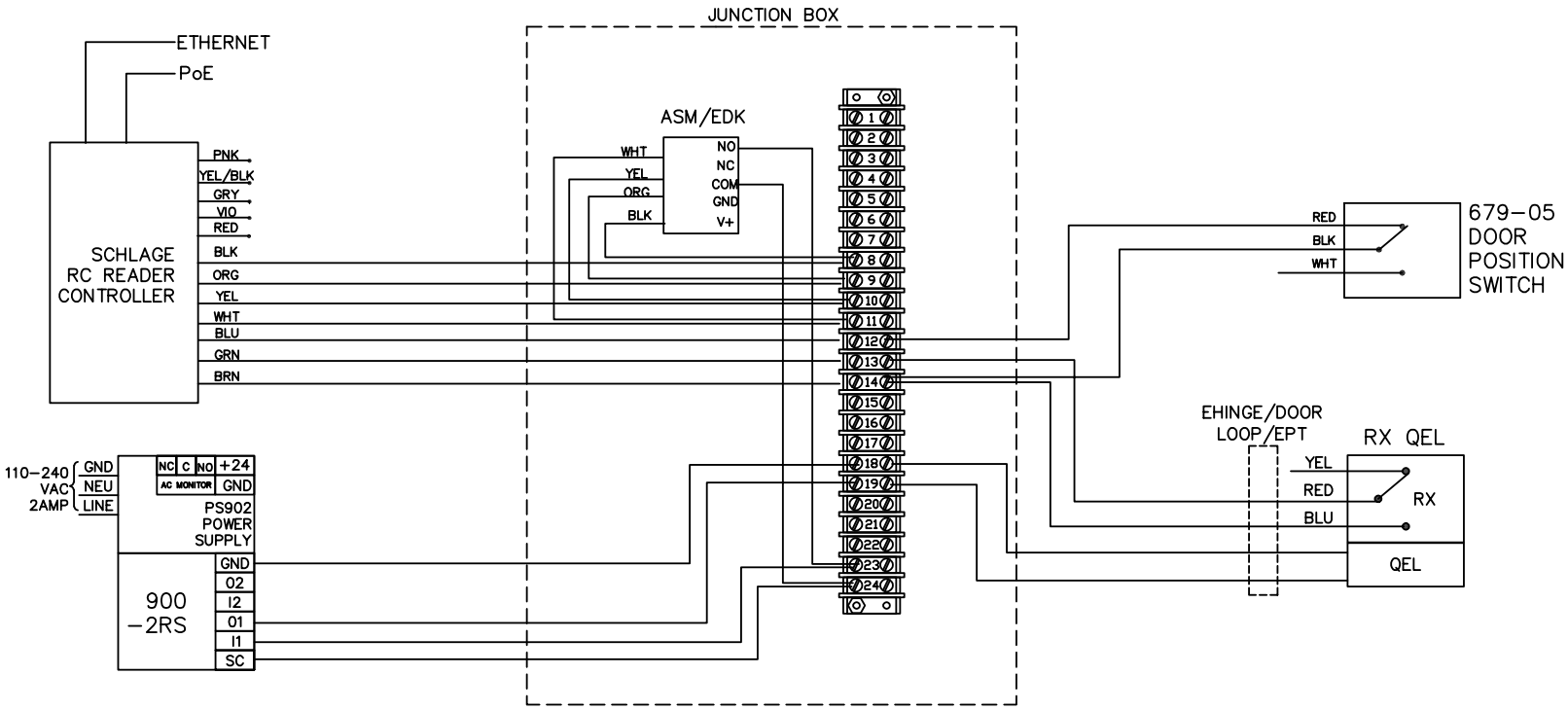

NOTES:
1) ALL LOW VOLTAGE WIRING TO BE STANDARD, MULTI-CONDUCTOR COLOR CODED WITHOUT SPLICES.

2) WIRING TO CONFORM TO APPLICABLE NATIONAL, STATE AND LOCAL ELECTRICAL CODES.

3) REFER TO SPECIFIC PRODUCT INSTALLATION INSTRUCTIONS FOR SPECIFIC WIRING REQUIREMENTS.

4) THIS DRAWING IS FOR GRAPHICAL REPRESENTATION OF PRODUCTS DETAILED IN THE HARDWARE SET ONLY.

HARDWARE USED:
- SCHLAGE RC CONTROLLER
- SCHLAGE RC PIGTAIL
- SCHLAGE ASM/EDK MODULE
- VON DUPRIN RX QEL
- 33A/35A/98/99 RIM EXIT DEVICE
- DOOR LOOP OR EHINGE OR EPT
- VON DUPRIN PS902x900-2RS
- 679-05 DPS
- JUNCTION BOX

OPERATION:
DOORS NORMALLY CLOSED AND LOCKED.

ENTRY BY VALID CREDENTIAL OR KEY OVERRIDE. CREDENTIAL SIGNAL QEL LATCH RETRACTION ON PANIC DEVICE.

RX IN PANIC DEVICE TO SHUNT DOOR FORCED ALARM.

CONFIRM PoE SOURCE SUFFICIENT FOR LOAD.

FREE EGRESS AT ALL TIMES.

DATE DRAWN: 09-09-20
REVISION DATE: 3-2-22

ALLEGION™

TITLE:
SCHLAGE RC CONTROLLER WITH RX QEL EXIT -SINGLE DOOR

DRAWING TYPE: WIRING DIAGRAM
DWG NO: 113755W
DRAWN/CHECKED BY: DOVE/TAMARCHENKO
REV B

THIS DIAGRAM REPRESENTS A GENERIC CONFIGURATION. CUSTOM WIRING DIAGRAMS CAN BE ACQUIRED BY CONTACTING TECHNICAL SUPPORT.

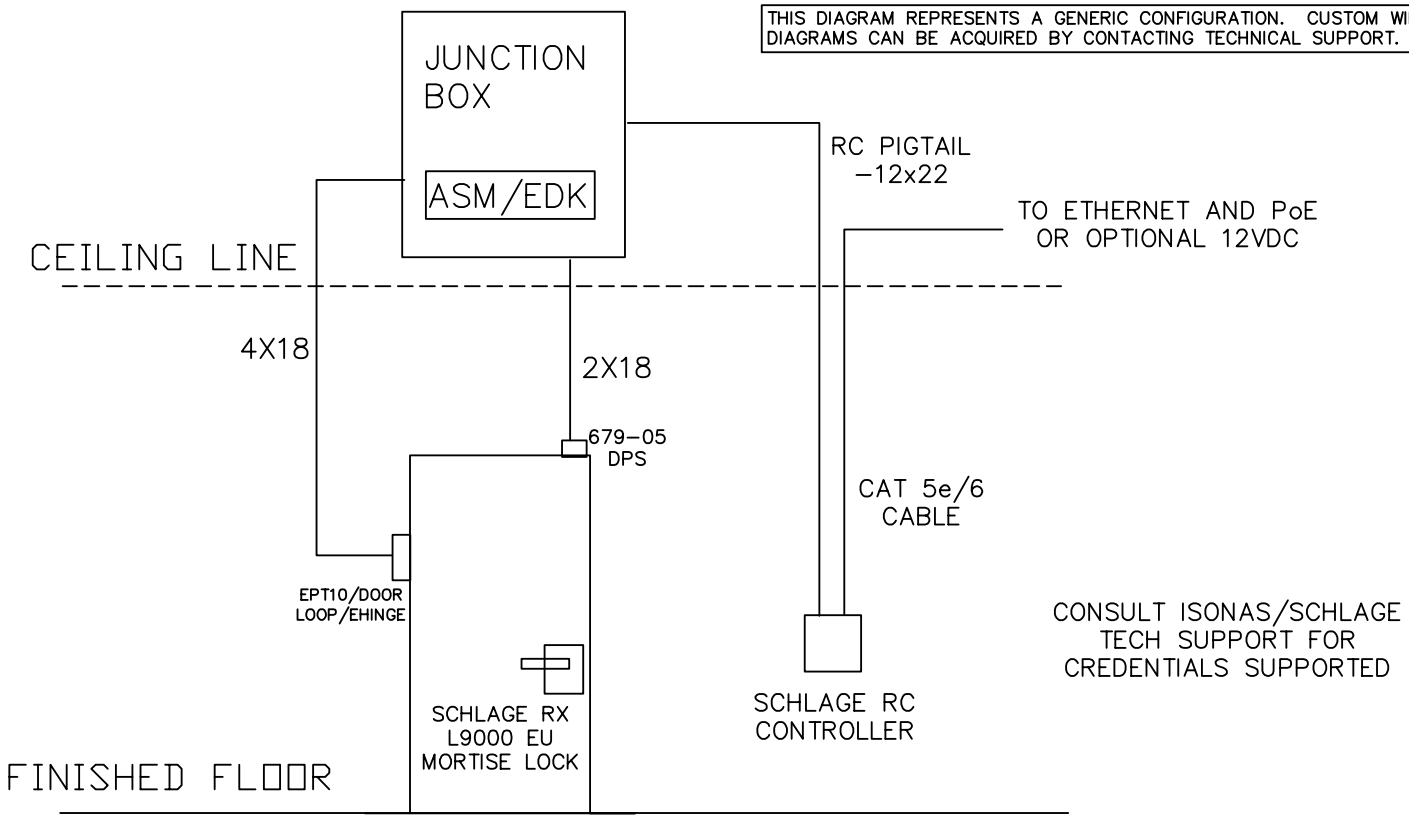

NOTES:
1) ALL LOW VOLTAGE WIRING TO BE STANDARD, MULTI-CONDUCTOR COLOR CODED WITHOUT SPLICES.

2) WIRING TO CONFORM TO APPLICABLE NATIONAL, STATE AND LOCAL ELECTRICAL CODES.

3) REFER TO SPECIFIC PRODUCT INSTALLATION INSTRUCTIONS FOR SPECIFIC WIRING REQUIREMENTS.

4) THIS DRAWING IS FOR GRAPHICAL REPRESENTATION OF PRODUCTS DETAILED IN THE HARDWARE SET ONLY.

5) * CONDUCTOR COUNT TO BE DETERMINED BY ACCESS CONTROL PANEL PROVIDER.

HARDWARE USED:
SCHLAGE RC CONTROLLER
SCHLAGE RC PIGTAIL
SCHLAGE ASM/EDK MODULE
SCHLAGE RX L9000 EU MORTISE LOCK
SCHLAGE 679-05 DPS
EPT10/DOOR LOOP/EHINGE
JUNCTION BOX

OPERATION:
DOORS NORMALLY CLOSED AND LOCKED.

ENTRY BY VALID CREDENTIAL TO UNLOCK ELOCK OR KEY OVERRIDE.

RX SWITCH IN RX L9000 EU MORTISE LOCK TO SHUNT DOOR FORCED ALARM.

FREE EGRESS AT ALL TIMES.

DATE DRAWN: 10-16-20
REVISION DATE: 3-3-22

ALLEGION™

SCHLAGE RC CONTROLLER, RX L9000 EU MORTISE LOCK, 679-05 DPS - SINGLE DOOR

DRAWING TYPE: RISER DIAGRAM
DWG NO: 113762R
REV B
DRAWN/CHECKED BY: DOVE/TAMARCHENKO

THIS DIAGRAM REPRESENTS A GENERIC CONFIGURATION. CUSTOM WIRING DIAGRAMS CAN BE ACQUIRED BY CONTACTING TECHNICAL SUPPORT.

NOTE: RC DIODE INCLUDED WITH RC CONTROLLER. PLACE CLOSE TO ELOCK FOR MOST EFFECTIVENESS

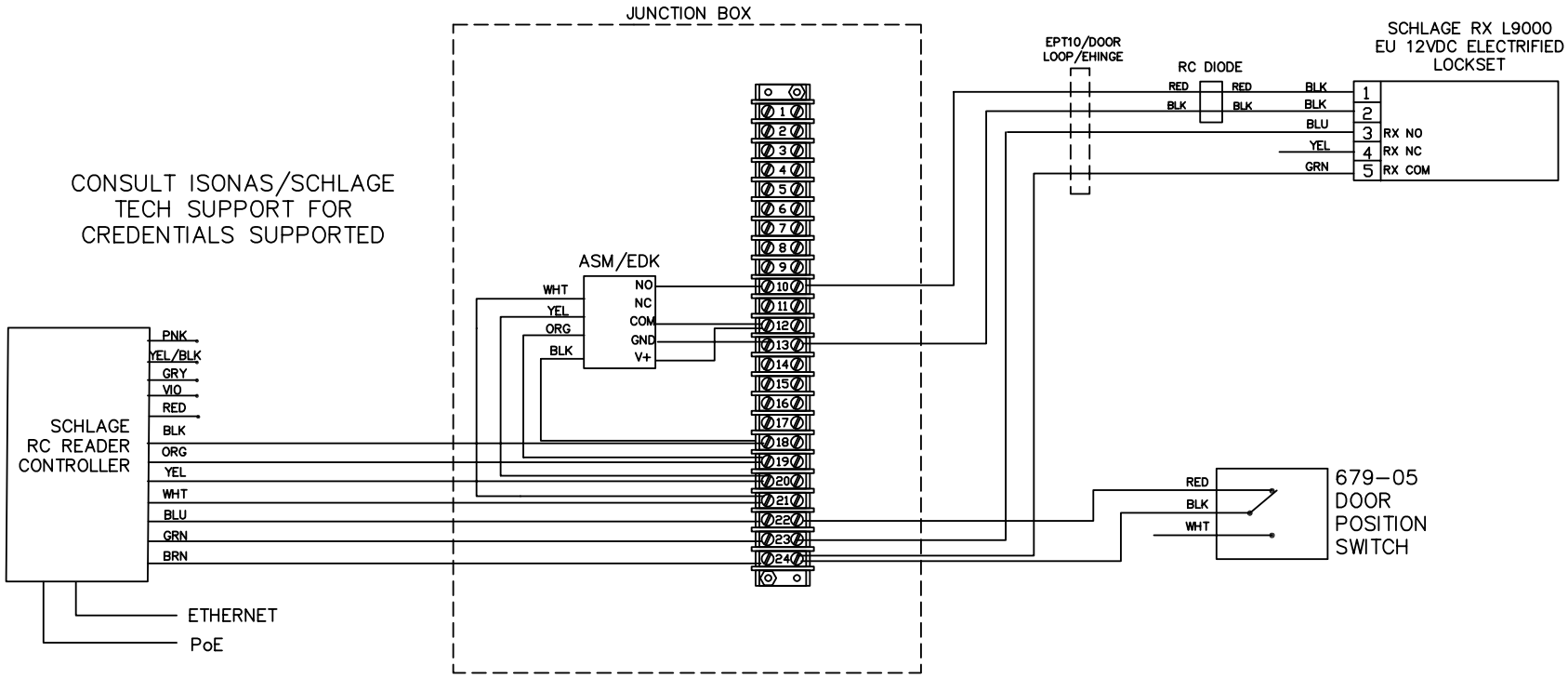

NOTES:
1) ALL LOW VOLTAGE WIRING TO BE STANDARD, MULTI-CONDUCTOR COLOR CODED WITHOUT SPLICES.

2) WIRING TO CONFORM TO APPLICABLE NATIONAL, STATE AND LOCAL ELECTRICAL CODES.

3) REFER TO SPECIFIC PRODUCT INSTALLATION INSTRUCTIONS FOR SPECIFIC WIRING REQUIREMENTS.

4) THIS DRAWING IS FOR GRAPHICAL REPRESENTATION OF PRODUCTS DETAILED IN THE HARDWARE SET ONLY.

HARDWARE USED:

SCHLAGE RC CONTROLLER
SCHLAGE RC PIGTAIL
SCHLAGE ASM/EDK MODULE
SCHLAGE RX L9000 EU MORTISE LOCK
SCHLAGE 679-05 DPS
EPT10/DOOR LOOP/EHINGE
JUNCTION BOX

OPERATION:
DOORS NORMALLY CLOSED AND LOCKED.

ENTRY BY VALID CREDENTIAL TO UNLOCK ELOCK OR KEY OVERRIDE.

RX SWITCH IN RX L9000 EU MORTISE LOCK TO SHUNT DOOR FORCED ALARM.

FREE EGRESS AT ALL TIMES.

DATE DRAWN: 10-16-20

REVISION DATE: 3-3-22

ALLEGION™

SCHLAGE RC CONTROLLER, RX L9000 EU MORTISE LOCK, 679-05 DPS - SINGLE DOOR

DRAWING TYPE: WIRING DIAGRAM

DWG NO: 113762W

REV B

DRAWN/CHECKED BY: DOVE/TAMARCHENKO

THIS DIAGRAM REPRESENTS A GENERIC CONFIGURATION. CUSTOM WIRING DIAGRAMS CAN BE ACQUIRED BY CONTACTING TECHNICAL SUPPORT.

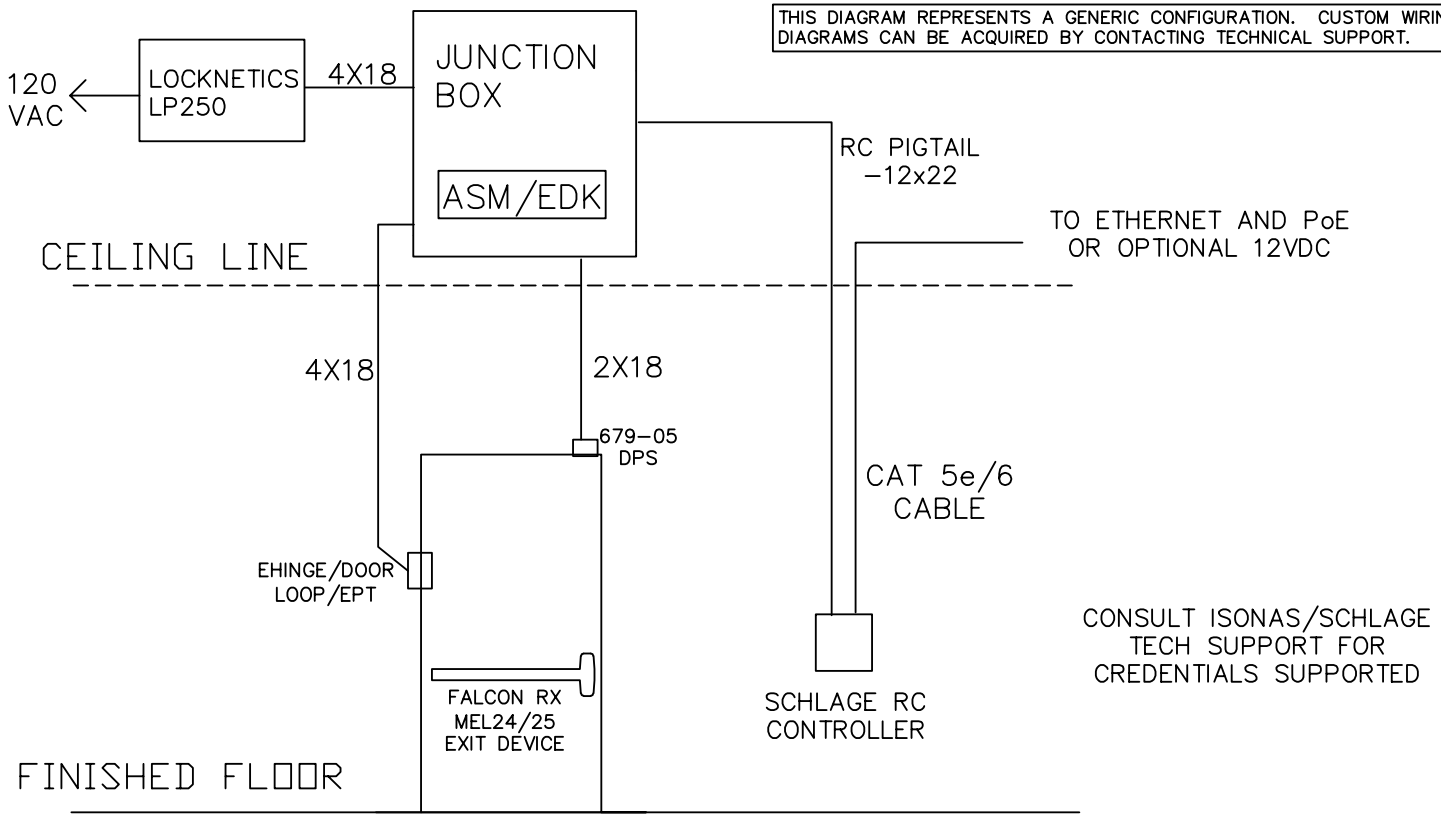

NOTES:
1) ALL LOW VOLTAGE WIRING TO BE STANDARD, MULTI-CONDUCTOR COLOR CODED WITHOUT SPLICES.

2) WIRING TO CONFORM TO APPLICABLE NATIONAL, STATE AND LOCAL ELECTRICAL CODES.

3) REFER TO SPECIFIC PRODUCT INSTALLATION INSTRUCTIONS FOR SPECIFIC WIRING REQUIREMENTS.

4) THIS DRAWING IS FOR GRAPHICAL REPRESENTATION OF PRODUCTS DETAILED IN THE HARDWARE SET ONLY.

5) * CONDUCTOR COUNT TO BE DETERMINED BY ACCESS CONTROL PANEL PROVIDER.

HARDWARE USED:
- SCHLAGE RC CONTROLLER
- SCHLAGE RC PIGTAIL
- SCHLAGE ASM/EDK MODULE
- FALCON RX MEL 24/25 EXIT DEVICE
- DOOR LOOP OR EHINGE OR EPT
- LOCKNETICS LP250 POWER SUPPLY
- SCHLAGE 679-05 DPS
- JUNCTION BOX

OPERATION:
DOORS NORMALLY CLOSED AND LOCKED.

ENTRY BY VALID CREDENTIAL OR KEY OVERRIDE. CREDENTIAL TO SIGNAL MEL LATCH RETRACTION ON PANIC DEVICE.

RX IN PANIC DEVICE TO SHUNT DOOR FORCED ALARM .

FREE EGRESS AT ALL TIMES.

DATE DRAWN: 10-16-20

REVISION DATE: 3-2-22

ALLEGION™

TITLE: SCHLAGE RC CONTROLLER WITH RX MEL EXIT, DPS, LP250 -SINGLE DOOR

DRAWING TYPE: RISER DIAGRAM

DWG NO: 113763R

DRAWN/CHECKED BY: DOVE/TAMARCHENKO

REV B

CONSULT ISONAS/SCHLAGE
TECH SUPPORT FOR
CREDENTIALS SUPPORTED

THIS DIAGRAM REPRESENTS A GENERIC CONFIGURATION. CUSTOM WIRING DIAGRAMS CAN BE ACQUIRED BY CONTACTING TECHNICAL SUPPORT.

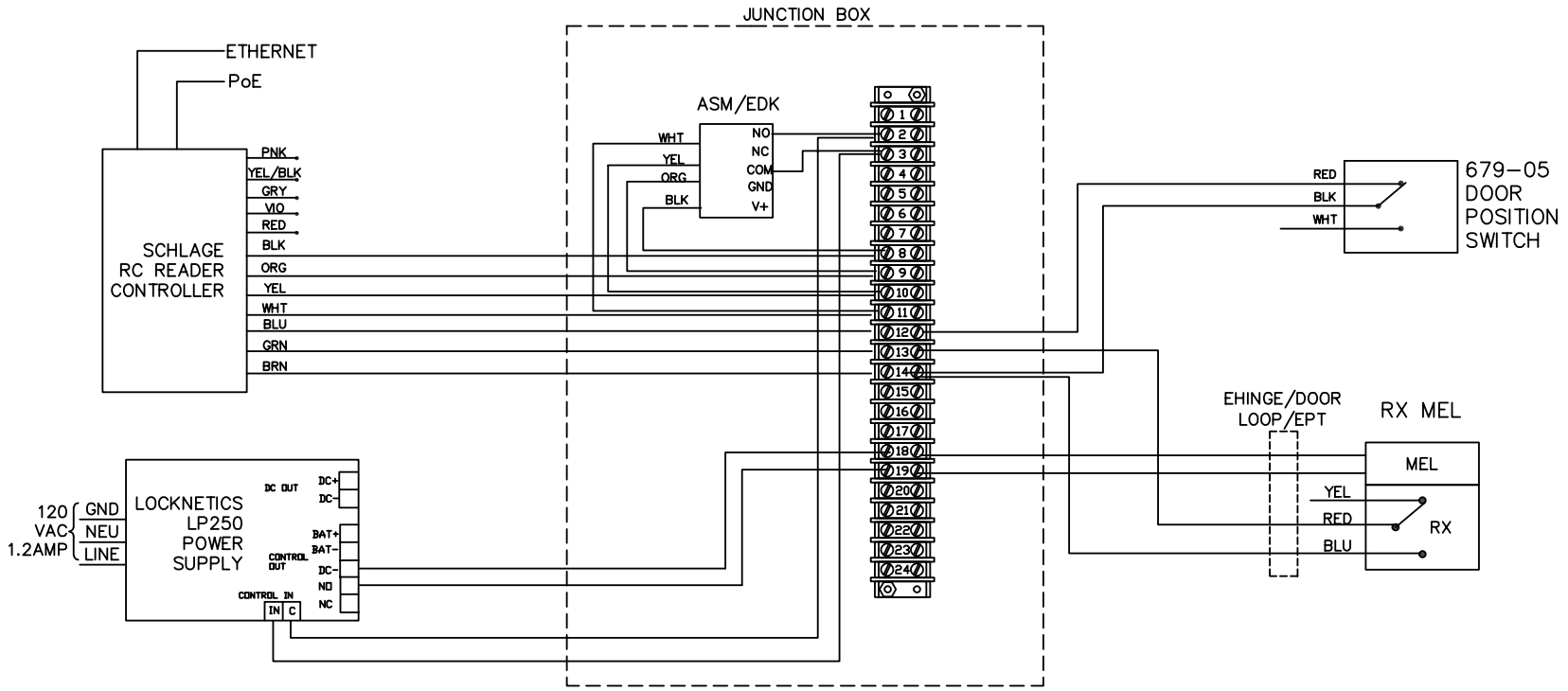

NOTES:
1) ALL LOW VOLTAGE WIRING TO BE STANDARD, MULTI-CONDUCTOR COLOR CODED WITHOUT SPLICES.

2) WIRING TO CONFORM TO APPLICABLE NATIONAL, STATE AND LOCAL ELECTRICAL CODES.

3) REFER TO SPECIFIC PRODUCT INSTALLATION INSTRUCTIONS FOR SPECIFIC WIRING REQUIREMENTS.

4) THIS DRAWING IS FOR GRAPHICAL REPRESENTATION OF PRODUCTS DETAILED IN THE HARDWARE SET ONLY.

HARDWARE USED:
- SCHLAGE RC CONTROLLER
- SCHLAGE RC PIGTAIL
- SCHLAGE ASM/EDK MODULE
- FALCON RX MEL 24/25 EXIT DEVICE
- DOOR LOOP OR EHINGE OR EPT
- LOCKNETICS LP250 POWER SUPPLY
- SCHLAGE 679-05 DPS
- JUNCTION BOX

OPERATION:
DOORS NORMALLY CLOSED AND LOCKED.

ENTRY BY VALID CREDENTIAL OR KEY OVERRIDE. CREDENTIAL TO SIGNAL MEL LATCH RETRACTION ON PANIC DEVICE.

RX IN PANIC DEVICE TO SHUNT DOOR FORCED ALARM.

FREE EGRESS AT ALL TIMES.

DATE DRAWN: 10-16-20

REVISION DATE: 3-2-22

ALLEGION™

TITLE:
SCHLAGE RC CONTROLLER WITH RX MEL EXIT, DPS, LP250 -SINGLE DOOR

DRAWING TYPE: WIRING DIAGRAM

DWG NO: 113763W

DRAWN/CHECKED BY: DOVE/TAMARCHENKO

REV B

THIS DIAGRAM REPRESENTS A GENERIC CONFIGURATION. CUSTOM WIRING DIAGRAMS CAN BE ACQUIRED BY CONTACTING TECHNICAL SUPPORT.

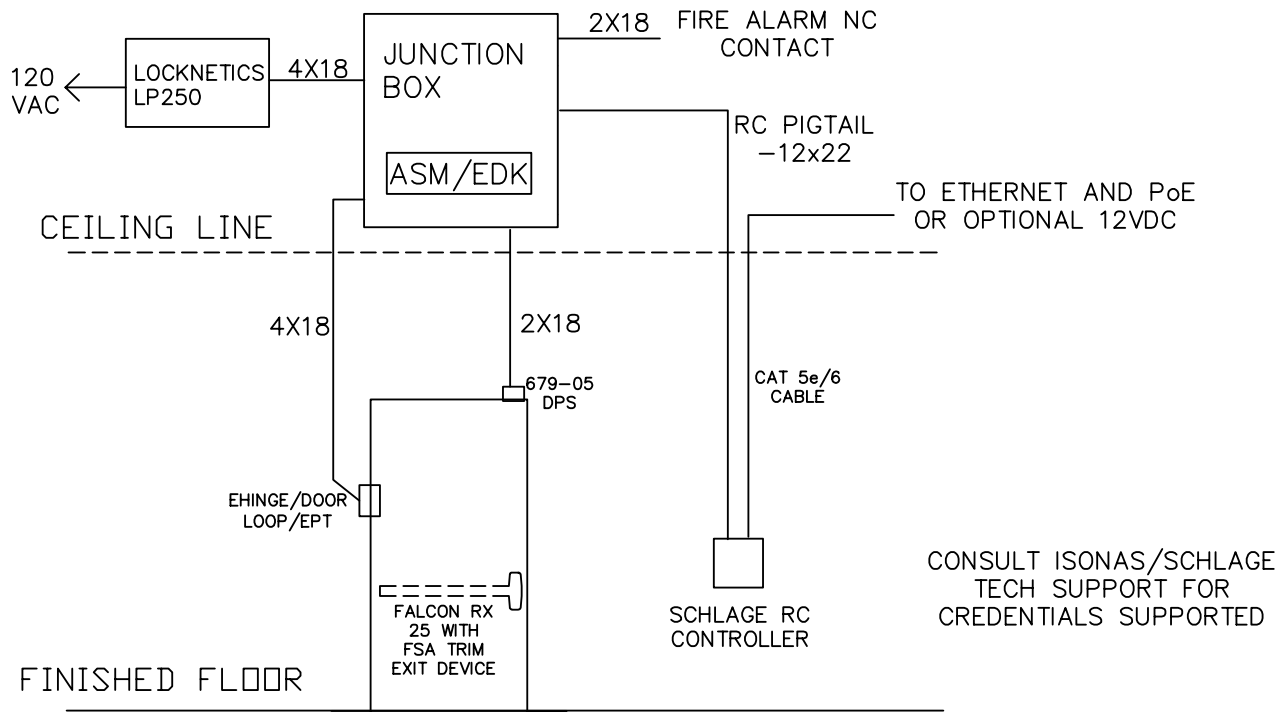

NOTES:
1) ALL LOW VOLTAGE WIRING TO BE STANDARD, MULTI-CONDUCTOR COLOR CODED WITHOUT SPLICES.

2) WIRING TO CONFORM TO APPLICABLE NATIONAL, STATE AND LOCAL ELECTRICAL CODES.

3) REFER TO SPECIFIC PRODUCT INSTALLATION INSTRUCTIONS FOR SPECIFIC WIRING REQUIREMENTS.

4) THIS DRAWING IS FOR GRAPHICAL REPRESENTATION OF PRODUCTS DETAILED IN THE HARDWARE SET ONLY.

5) * CONDUCTOR COUNT TO BE DETERMINED BY ACCESS CONTROL PANEL PROVIDER.

HARDWARE USED:
- SCHLAGE RC CONTROLLER
- SCHLAGE RC PIGTAIL
- SCHLAGE ASM/EDK MODULE
- FALCON RX E 25 EXIT DEVICE WITH FSA TRIM
- DOOR LOOP OR EHINGE OR EPT
- LOCKNETICS LP250 POWER SUPPLY
- SCHLAGE 679-05 DPS
- JUNCTION BOX

OPERATION:
DOORS NORMALLY CLOSED AND LOCKED.

ENTRY BY VALID CREDENTIAL OR KEY OVERRIDE. CREDENTIAL TO SIGNAL UNLOCKING OF OUTSIDE TRIM ON PANIC DEVICE.

RX IN PANIC DEVICE TO SHUNT DOOR FORCED ALARM.

FSA TRIM ON PANIC IS FAIL SAFE AND WILL UNLOCK ON FIRE ALARM.

FREE EGRESS AT ALL TIMES.

DATE DRAWN: 10-19-20

REVISION DATE: 3-2-22

ALLEGION™

TITLE: SCHLAGE RC CONTROLLER WITH RX 25 WITH FSA TRIM, DPS, LP250 -SINGLE DOOR FIRE RATED

DRAWING TYPE: RISER DIAGRAM

DWG NO: 113764R

DRAWN/CHECKED BY: DOVE/TAMARCHENKO

REV B

THIS DIAGRAM REPRESENTS A GENERIC CONFIGURATION. CUSTOM WIRING DIAGRAMS CAN BE ACQUIRED BY CONTACTING TECHNICAL SUPPORT.

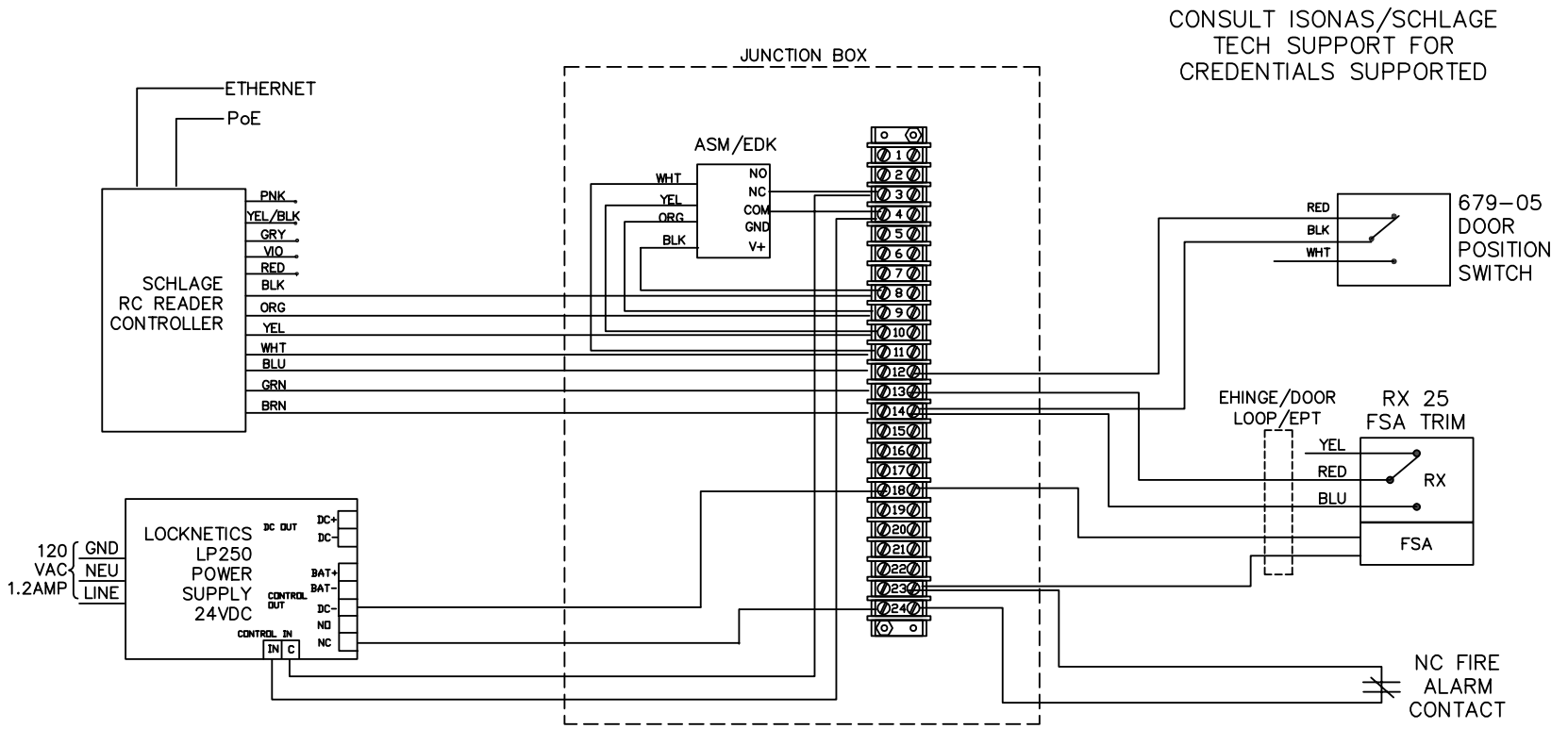

NOTES:
1) ALL LOW VOLTAGE WIRING TO BE STANDARD, MULTI-CONDUCTOR COLOR CODED WITHOUT SPLICES.

2) WIRING TO CONFORM TO APPLICABLE NATIONAL, STATE AND LOCAL ELECTRICAL CODES.

3) REFER TO SPECIFIC PRODUCT INSTALLATION INSTRUCTIONS FOR SPECIFIC WIRING REQUIREMENTS.

4) THIS DRAWING IS FOR GRAPHICAL REPRESENTATION OF PRODUCTS DETAILED IN THE HARDWARE SET ONLY.

HARDWARE USED:
SCHLAGE RC CONTROLLER
SCHLAGE RC PIGTAIL
SCHLAGE ASM/EDK MODULE
FALCON RX E 25 EXIT DEVICE WITH FSA TRIM
DOOR LOOP OR EHINGE OR EPT
LOCKNETICS LP250 POWER SUPPLY
SCHLAGE 679-05 DPS
JUNCTION BOX

OPERATION:
DOORS NORMALLY CLOSED AND LOCKED.

ENTRY BY VALID CREDENTIAL OR KEY OVERRIDE. CREDENTIAL TO SIGNAL UNLOCKING OF OUTSIDE TRIM ON PANIC DEVICE.

RX IN PANIC DEVICE TO SHUNT DOOR FORCED ALARM.

FSA TRIM ON PANIC IS FAIL SAFE AND WILL UNLOCK ON FIRE ALARM.

FREE EGRESS AT ALL TIMES.

DATE DRAWN: 10-19-20

REVISION DATE: 3-2-22

ALLEGION™

TITLE: SCHLAGE RC CONTROLLER WITH RX 25 WITH FSA TRIM, DPS, LP250 -SINGLE DOOR FIRE RATED

DRAWING TYPE: WIRING DIAGRAM

DWG NO: 113764W

REV: B

DRAWN/CHECKED BY: DOVE/TAMARCHENKO

THIS DIAGRAM REPRESENTS A GENERIC CONFIGURATION. CUSTOM WIRING DIAGRAMS CAN BE ACQUIRED BY CONTACTING TECHNICAL SUPPORT.

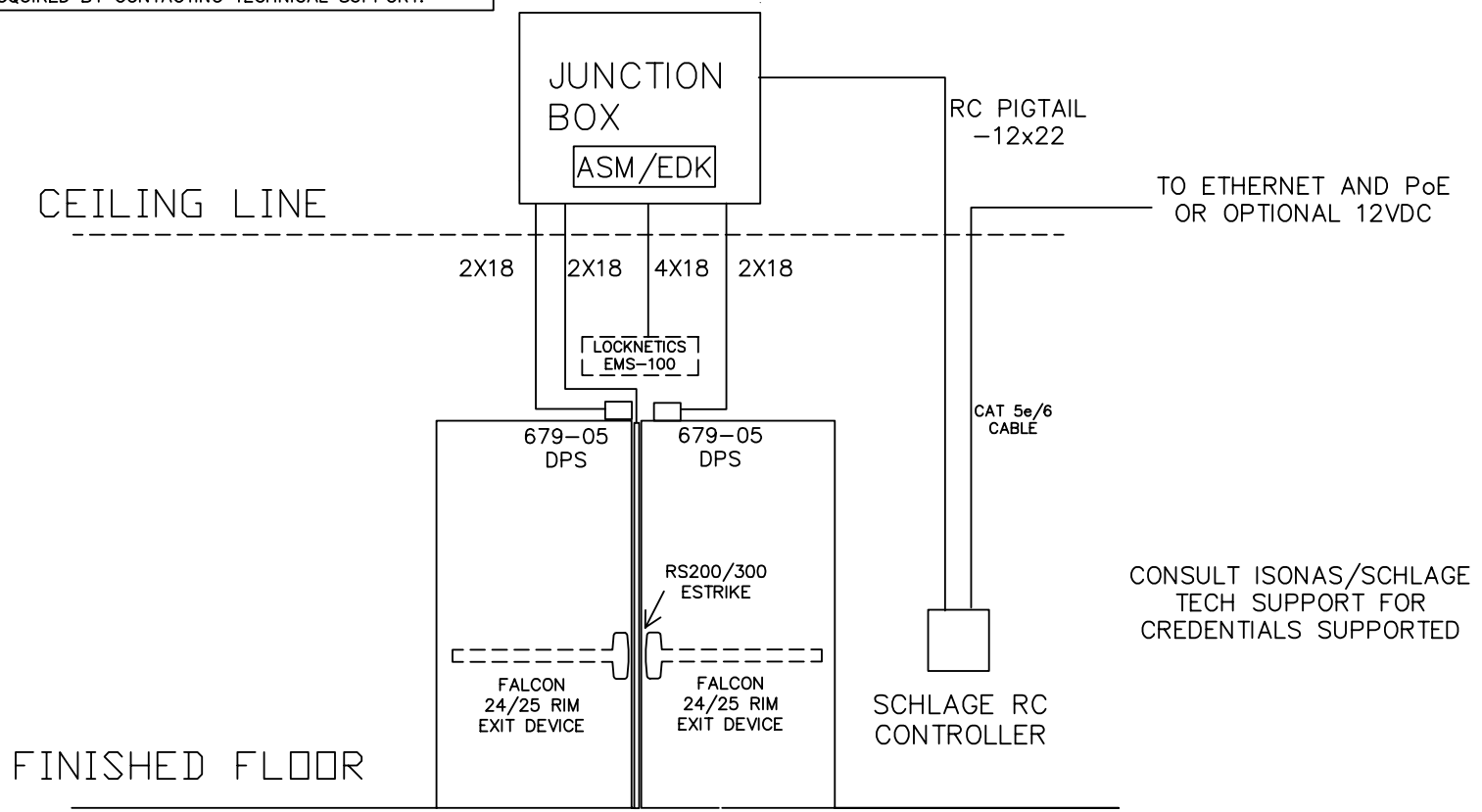

NOTES:
1) ALL LOW VOLTAGE WIRING TO BE STANDARD, MULTI-CONDUCTOR COLOR CODED WITHOUT SPLICES.

2) WIRING TO CONFORM TO APPLICABLE NATIONAL, STATE AND LOCAL ELECTRICAL CODES.

3) REFER TO SPECIFIC PRODUCT INSTALLATION INSTRUCTIONS FOR SPECIFIC WIRING REQUIREMENTS.

4) THIS DRAWING IS FOR GRAPHICAL REPRESENTATION OF PRODUCTS DETAILED IN THE HARDWARE SET ONLY.

5) * CONDUCTOR COUNT TO BE DETERMINED BY ACCESS CONTROL PANEL PROVIDER.

HARDWARE USED:
- SCHLAGE RC CONTROLLER
- SCHLAGE RC PIGTAIL
- SCHLAGE ASM/EDK MODULE
- 1 RS 200/300 FSE RIM ESTRIKE
- 2 FALCON 24 25 RIM PANICS
- 1 MULLION
- LOCKNETICS EMS-100 MOTION SENSOR
- 2 SCHLAGE 679-05 DPS
- JUNCTION BOX

OPERATION:
DOORS NORMALLY CLOSED AND LOCKED.

ENTRY BY VALID CREDENTIAL OR KEY OVERRIDE. PROPER CREDENTIAL RELEASES FSE RS200 300 ESTRIKE.

EMS-100 MOTION SENSOR TO SHUNT DOOR FORCED ALARM.

CONFIRM PoE SOURCE SUFFICIENT FOR LOAD.

FREE EGRESS AT ALL TIMES.

DATE DRAWN: 10-19-20

REVISION DATE: 3-3-22

ALLEGION™

TITLE: SCHLAGE RC CONTROLLER WITH 24/25 RIM WITH MULLION, RS200/300, MOTION SENSOR, DPS PAIR OF DOORS

DRAWING TYPE: RISER DIAGRAM

DWG NO: 113765R

DRAWN/CHECKED BY: DOVE/TAMARCHENKO

REV B

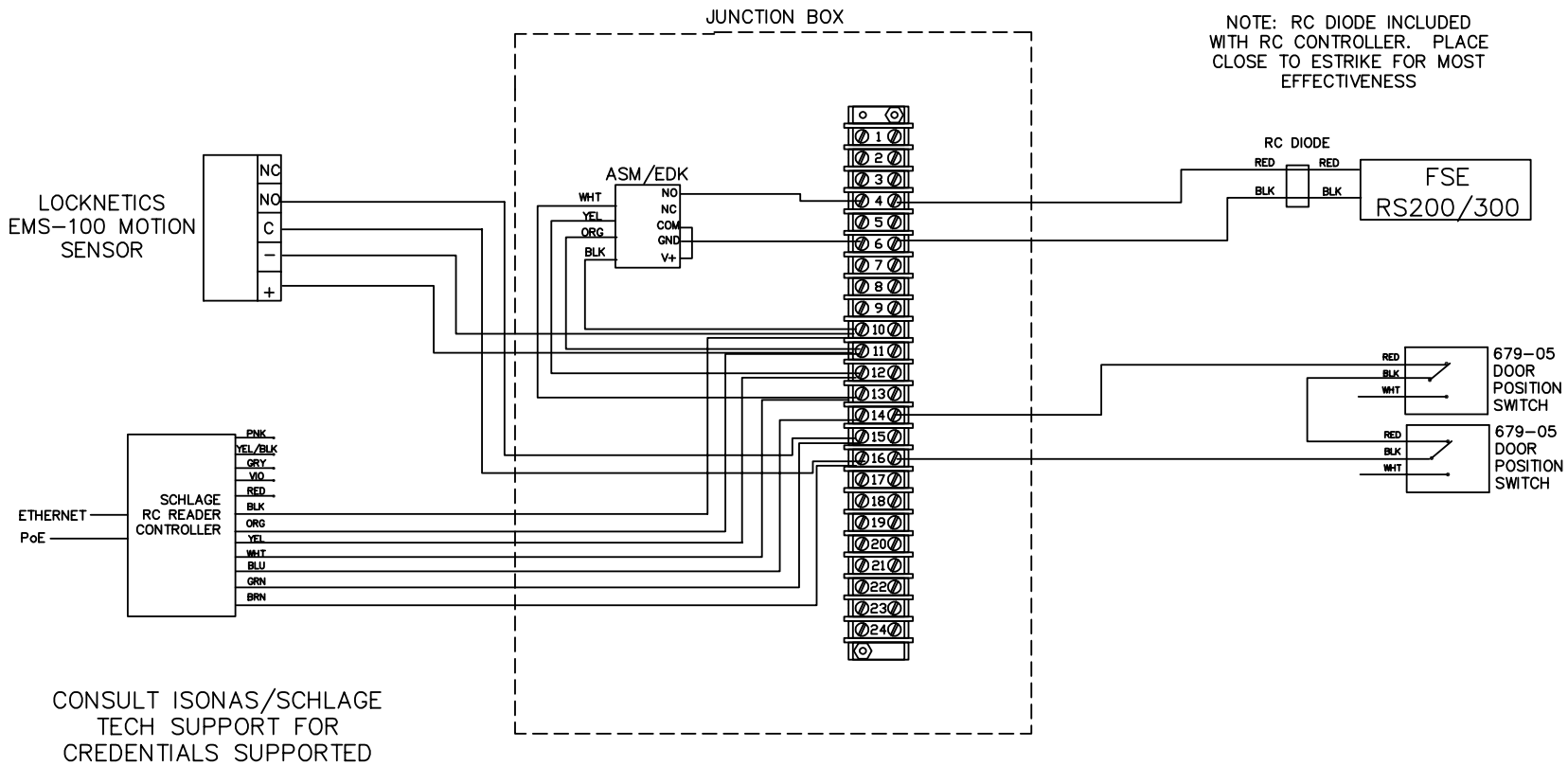

CONSULT ISONAS/SCHLAGE TECH SUPPORT FOR CREDENTIALS SUPPORTED

THIS DIAGRAM REPRESENTS A GENERIC CONFIGURATION. CUSTOM WIRING DIAGRAMS CAN BE ACQUIRED BY CONTACTING TECHNICAL SUPPORT.

NOTES:
1) ALL LOW VOLTAGE WIRING TO BE STANDARD, MULTI-CONDUCTOR COLOR CODED WITHOUT SPLICES.

2) WIRING TO CONFORM TO APPLICABLE NATIONAL, STATE AND LOCAL ELECTRICAL CODES.

3) REFER TO SPECIFIC PRODUCT INSTALLATION INSTRUCTIONS FOR SPECIFIC WIRING REQUIREMENTS.

4) THIS DRAWING IS FOR GRAPHICAL REPRESENTATION OF PRODUCTS DETAILED IN THE HARDWARE SET ONLY.

5) * CONDUCTOR COUNT TO BE DETERMINED BY ACCESS CONTROL PANEL PROVIDER.

HARDWARE USED:
- SCHLAGE RC CONTROLLER
- SCHLAGE RC PIGTAIL
- SCHLAGE ASM/EDK MODULE
- 1 RS 200/300 FSE RIM ESTRIKE
- 2 FALCON 24 25 RIM PANICS
- 1 MULLION
- LOCKNETICS EMS-100 MOTION SENSOR
- 2 SCHLAGE 679-05 DPS
- JUNCTION BOX

OPERATION:
DOORS NORMALLY CLOSED AND LOCKED.

ENTRY BY VALID CREDENTIAL OR KEY OVERRIDE. PROPER CREDENTIAL RELEASES FSE RS200 300 ESTRIKE.

EMS-100 MOTION SENSOR TO SHUNT DOOR FORCED ALARM.

CONFIRM PoE SOURCE SUFFICIENT FOR LOAD.

FREE EGRESS AT ALL TIMES.

DATE DRAWN: 10-19-20

REVISION DATE: 3-3-22

ALLEGION™

TITLE: SCHLAGE RC CONTROLLER WITH 24/25 RIM WITH MULLION, RS200/300, MOTION SENSOR, DPS PAIR OF DOORS

DRAWING TYPE: WIRING DIAGRAM

DWG NO: 113765W

DRAWN/CHECKED BY: DOVE/TAMARCHENKO

REV B

THIS DIAGRAM REPRESENTS A GENERIC CONFIGURATION. CUSTOM WIRING DIAGRAMS CAN BE ACQUIRED BY CONTACTING TECHNICAL SUPPORT.

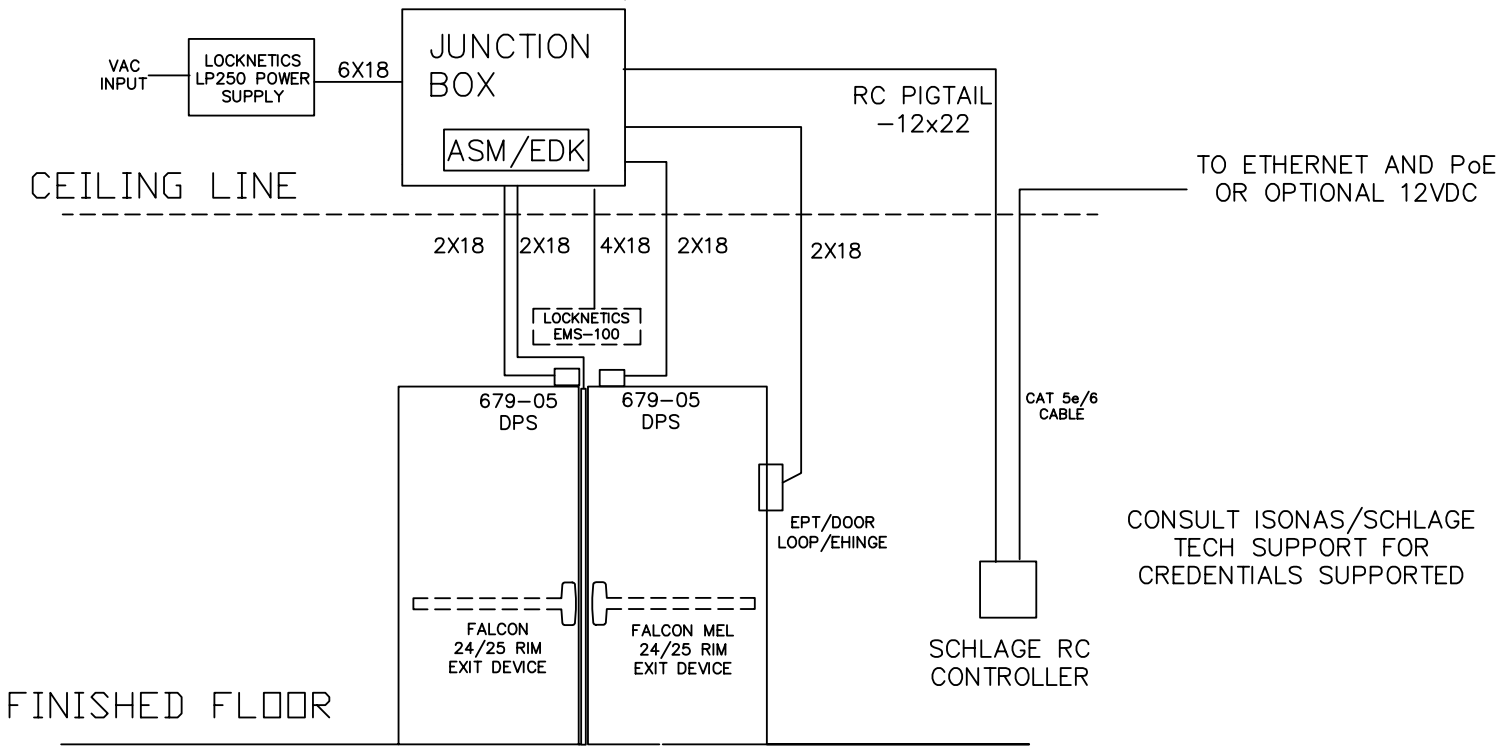

NOTES:
1) ALL LOW VOLTAGE WIRING TO BE STANDARD, MULTI-CONDUCTOR COLOR CODED WITHOUT SPLICES.

2) WIRING TO CONFORM TO APPLICABLE NATIONAL, STATE AND LOCAL ELECTRICAL CODES.

3) REFER TO SPECIFIC PRODUCT INSTALLATION INSTRUCTIONS FOR SPECIFIC WIRING REQUIREMENTS.

4) THIS DRAWING IS FOR GRAPHICAL REPRESENTATION OF PRODUCTS DETAILED IN THE HARDWARE SET ONLY.

5) * CONDUCTOR COUNT TO BE DETERMINED BY ACCESS CONTROL PANEL PROVIDER.

HARDWARE USED:
- SCHLAGE RC CONTROLLER
- SCHLAGE RC PIGTAIL
- SCHLAGE ASM/EDK MODULE
- 1 FALCON MEL 24 25 RIM PANICS
- 1 EPT/DOOR LOOP/EHINGE
- 1 FALCON 24 25 RIM PANIC
- 1 MULLION
- LOCKNETICS EMS-100 MOTION SENSOR
- 1 LOCKNETICS LP250
- 2 SCHLAGE 679-05 DPS
- JUNCTION BOX

OPERATION:
DOORS NORMALLY CLOSED AND LOCKED.

ENTRY BY VALID CREDENTIAL OR KEY OVERRIDE. PROPER CREDENTIAL TO SIGNAL MEL LATCH RETRACTION ON RHR LEAF.

EMS-100 MOTION SENSOR TO SHUNT DOOR FORCED ALARM.

CONFIRM PoE SOURCE SUFFICIENT FOR LOAD.

FREE EGRESS AT ALL TIMES.

DATE DRAWN: 10-19-20

REVISION DATE: 3-2-22

ALLEGION™

TITLE:
SCHLAGE RC CONTROLLER WITH MEL 24/25, MOTION SENSOR, DPS, LP250 PAIR OF DOORS

DRAWING TYPE: RISER DIAGRAM

DWG NO: 113766R

DRAWN/CHECKED BY: DOVE/TAMARCHENKO

REV B

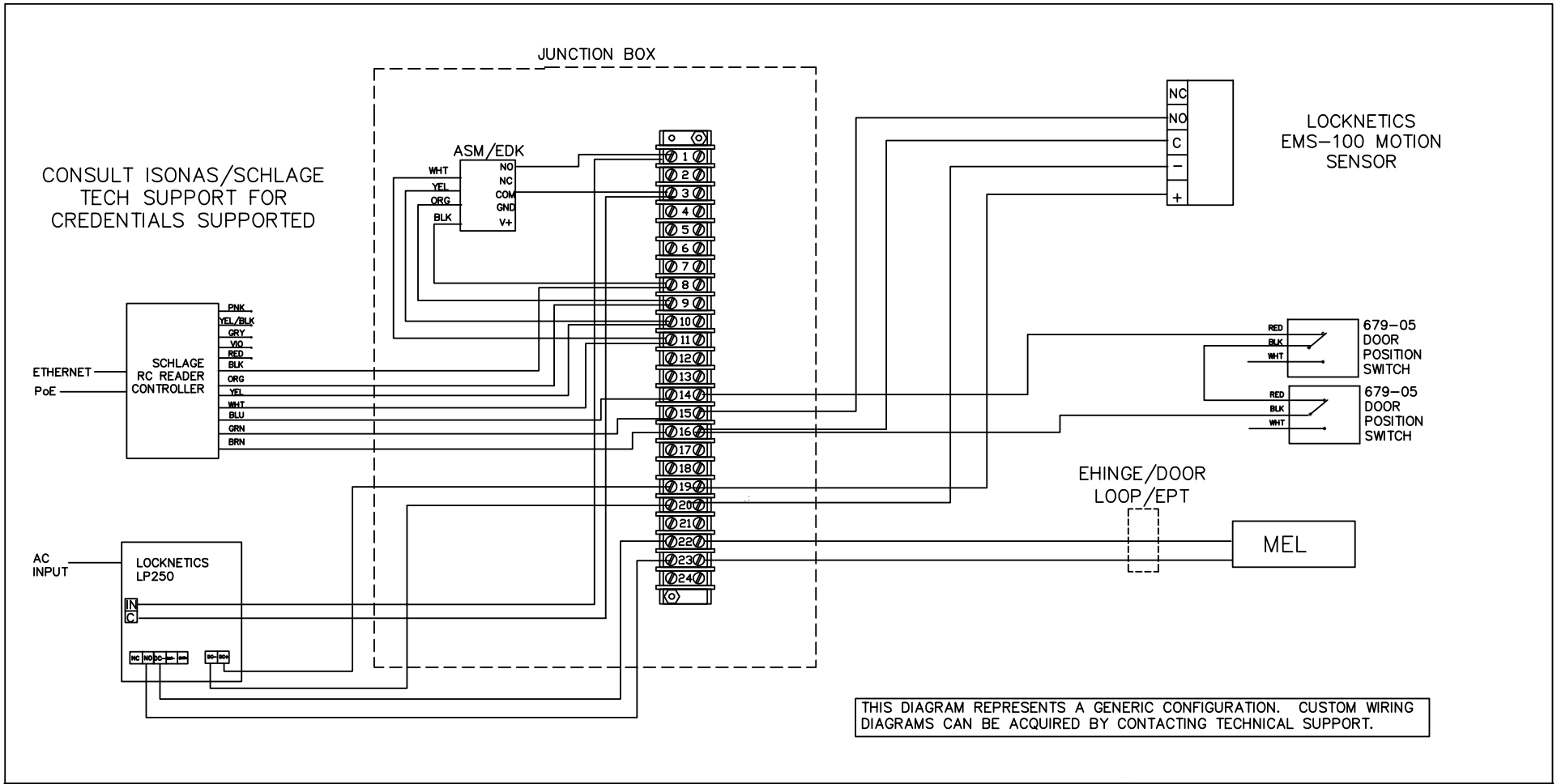

THIS DIAGRAM REPRESENTS A GENERIC CONFIGURATION. CUSTOM WIRING DIAGRAMS CAN BE ACQUIRED BY CONTACTING TECHNICAL SUPPORT.

NOTES:
1) ALL LOW VOLTAGE WIRING TO BE STANDARD, MULTI-CONDUCTOR COLOR CODED WITHOUT SPLICES.

2) WIRING TO CONFORM TO APPLICABLE NATIONAL, STATE AND LOCAL ELECTRICAL CODES.

3) REFER TO SPECIFIC PRODUCT INSTALLATION INSTRUCTIONS FOR SPECIFIC WIRING REQUIREMENTS.

4) THIS DRAWING IS FOR GRAPHICAL REPRESENTATION OF PRODUCTS DETAILED IN THE HARDWARE SET ONLY.

5) * CONDUCTOR COUNT TO BE DETERMINED BY ACCESS CONTROL PANEL PROVIDER.

HARDWARE USED:
- SCHLAGE RC CONTROLLER
- SCHLAGE RC PIGTAIL
- SCHLAGE ASM/EDK MODULE
- 1 FALCON MEL 24 25 RIM PANICS
- 1 EPT/DOOR LOOP/EHINGE
- 1 FALCON 24 25 RIM PANIC
- 1 MULLION
- LOCKNETICS EMS-100 MOTION SENSOR
- 1 LOCKNETICS LP250
- 2 SCHLAGE 679-05 DPS
- JUNCTION BOX

OPERATION:
DOORS NORMALLY CLOSED AND LOCKED.

ENTRY BY VALID CREDENTIAL OR KEY OVERRIDE. PROPER CREDENTIAL TO SIGNAL MEL LATCH RETRACTION ON RHR LEAF.

EMS-100 MOTION SENSOR TO SHUNT DOOR FORCED ALARM.

CONFIRM PoE SOURCE SUFFICIENT FOR LOAD.

FREE EGRESS AT ALL TIMES.

DATE DRAWN: 10-19-20

REVISION DATE: 3-2-22

ALLEGION™

TITLE:
SCHLAGE RC CONTROLLER WITH MEL 24/25, MOTION SENSOR, DPS, LP250 PAIR OF DOORS

DRAWING TYPE: WIRING DIAGRAM

DWG NO: 113766W

DRAWN/CHECKED BY: DOVE/TAMARCHENKO

REV B

THIS DIAGRAM REPRESENTS A GENERIC CONFIGURATION. CUSTOM WIRING DIAGRAMS CAN BE ACQUIRED BY CONTACTING TECHNICAL SUPPORT.

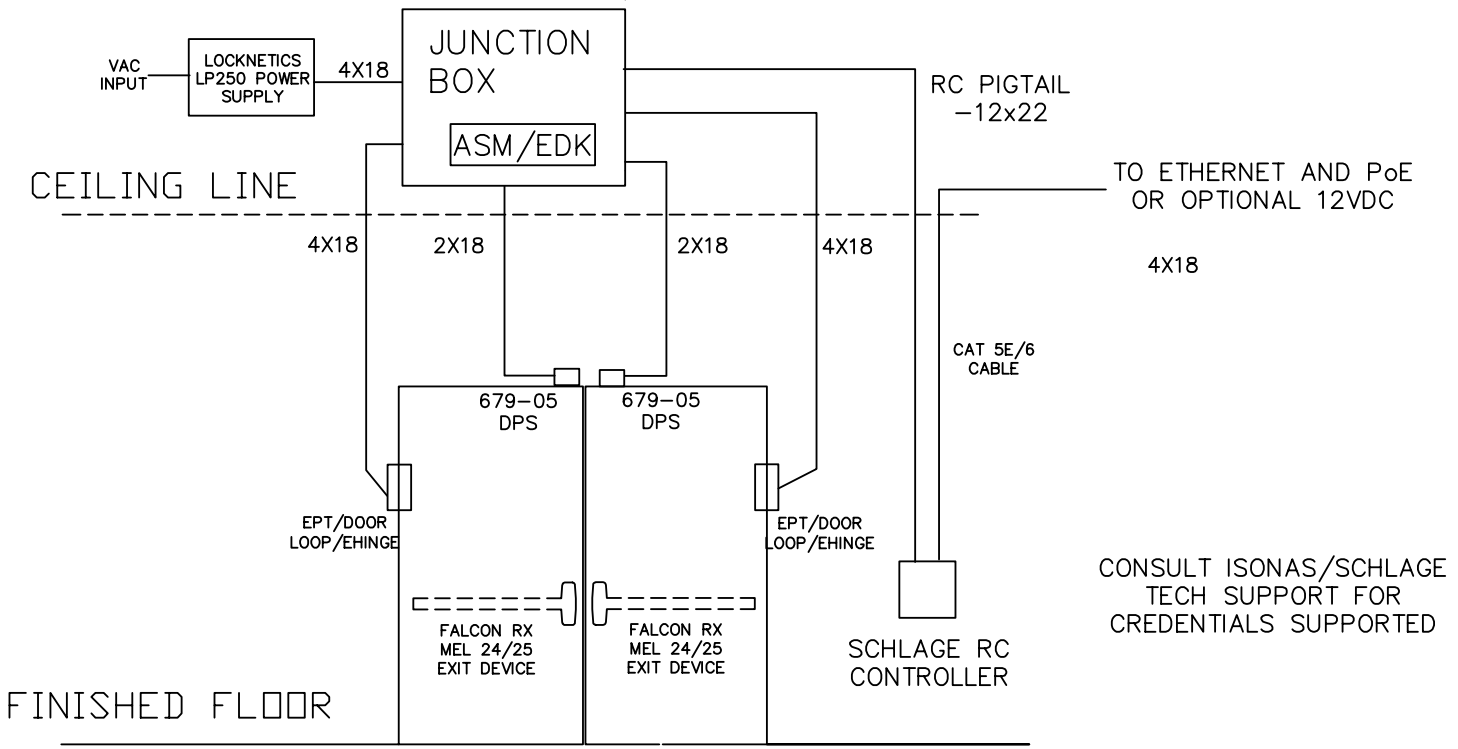

NOTES:
1) ALL LOW VOLTAGE WIRING TO BE STANDARD, MULTI-CONDUCTOR COLOR CODED WITHOUT SPLICES.

2) WIRING TO CONFORM TO APPLICABLE NATIONAL, STATE AND LOCAL ELECTRICAL CODES.

3) REFER TO SPECIFIC PRODUCT INSTALLATION INSTRUCTIONS FOR SPECIFIC WIRING REQUIREMENTS.

4) THIS DRAWING IS FOR GRAPHICAL REPRESENTATION OF PRODUCTS DETAILED IN THE HARDWARE SET ONLY.

5) * CONDUCTOR COUNT TO BE DETERMINED BY ACCESS CONTROL PANEL PROVIDER.

HARDWARE USED:
- SCHLAGE RC CONTROLLER
- SCHLAGE RC PIGTAIL
- SCHLAGE ASM/EDK MODULE
- 2 FALCON RX MEL 24 25 PANICS
- 2 EPT/DOOR LOOP/EHINGE
- 1 LOCKNETICS LP250
- 2 SCHLAGE 679-05 DPS
- JUNCTION BOX

OPERATION:
DOORS NORMALLY CLOSED AND LOCKED.

ENTRY BY VALID CREDENTIAL OR KEY OVERRIDE. PROPER CREDENTIAL SIGNALS MEL LATCHES TO RETRACT ON BOTH PANICS.

RX SWITCH IN EACH PANIC TO SHUNT DOOR FORCED ALARM.

CONFIRM PoE SOURCE SUFFICIENT FOR LOAD.

FREE EGRESS AT ALL TIMES.

DATE DRAWN: 10-19-20

REVISION DATE: 3-3-22

ALLEGION™

TITLE:
SCHLAGE RC CONTROLLER WITH PAIR RX MEL 24/25, DPS, LP250 PAIR OF DOORS

DRAWING TYPE: RISER DIAGRAM

DWG NO: 113767R

DRAWN/CHECKED BY: DOVE/TAMARCHENKO

REV B

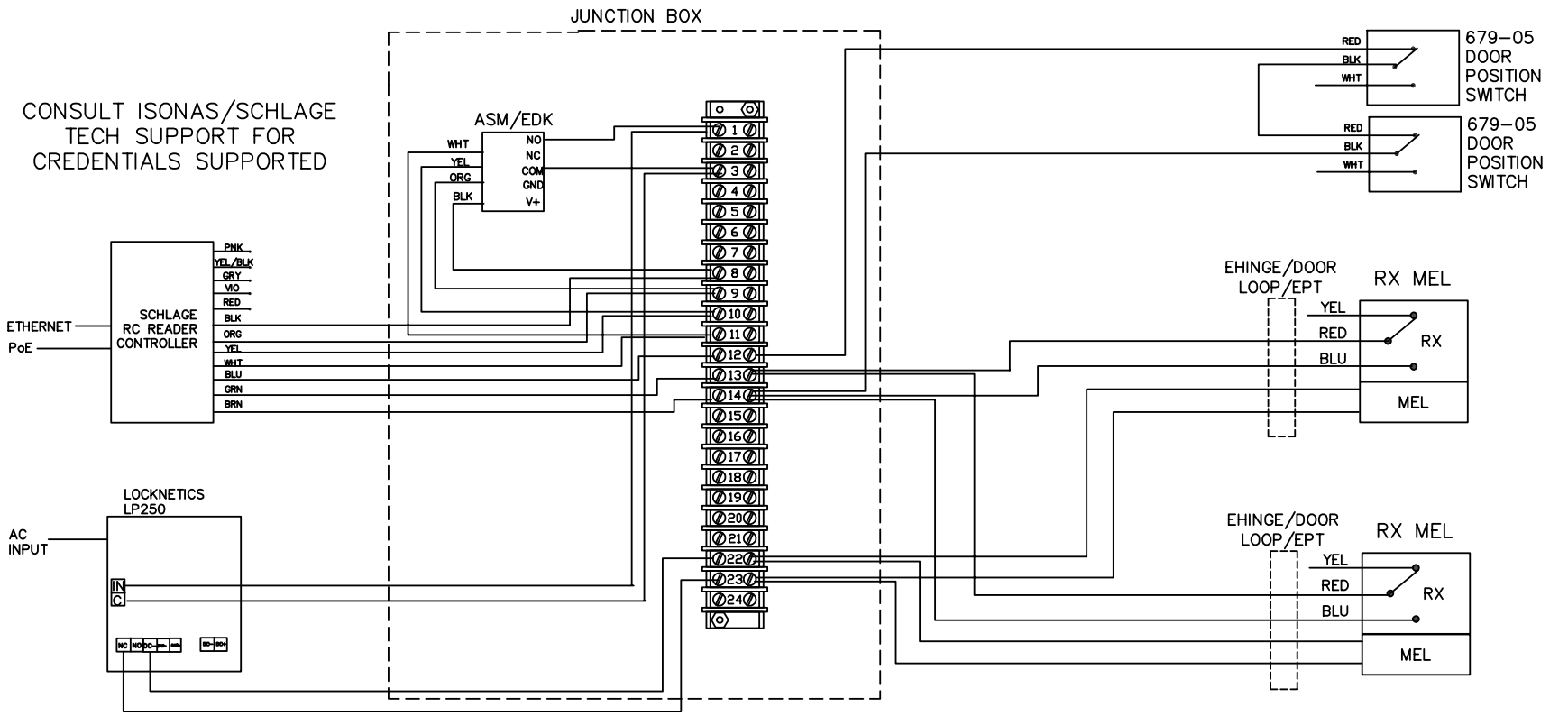

THIS DIAGRAM REPRESENTS A GENERIC CONFIGURATION. CUSTOM WIRING DIAGRAMS CAN BE ACQUIRED BY CONTACTING TECHNICAL SUPPORT.

NOTES:
1) ALL LOW VOLTAGE WIRING TO BE STANDARD, MULTI-CONDUCTOR COLOR CODED WITHOUT SPLICES.

2) WIRING TO CONFORM TO APPLICABLE NATIONAL, STATE AND LOCAL ELECTRICAL CODES.

3) REFER TO SPECIFIC PRODUCT INSTALLATION INSTRUCTIONS FOR SPECIFIC WIRING REQUIREMENTS.

4) THIS DRAWING IS FOR GRAPHICAL REPRESENTATION OF PRODUCTS DETAILED IN THE HARDWARE SET ONLY.

5) * CONDUCTOR COUNT TO BE DETERMINED BY ACCESS CONTROL PANEL PROVIDER.

HARDWARE USED:
- SCHLAGE RC CONTROLLER
- SCHLAGE RC PIGTAIL
- SCHLAGE ASM/EDK MODULE
- 2 FALCON RX MEL 24 25 PANICS
- 2 EPT/DOOR LOOP/EHINGE
- 1 LOCKNETICS LP250
- 2 SCHLAGE 679-05 DPS
- JUNCTION BOX

OPERATION:
DOORS NORMALLY CLOSED AND LOCKED.

ENTRY BY VALID CREDENTIAL OR KEY OVERRIDE. PROPER CREDENTIAL SIGNALS MEL LATCHES TO RETRACT ON BOTH PANICS.

RX SWITCH IN EACH PANIC TO SHUNT DOOR FORCED ALARM.

CONFIRM PoE SOURCE SUFFICIENT FOR LOAD.

FREE EGRESS AT ALL TIMES.

DATE DRAWN: 10-19-20

REVISION DATE: 3-3-22

ALLEGION™

TITLE:
SCHLAGE RC CONTROLLER WITH PAIR RX MEL 24/25, DPS, LP250 PAIR OF DOORS

DRAWING TYPE: WIRING DIAGRAM

DWG NO: 113767W

DRAWN/CHECKED BY: DOVE/TAMARCHENKO

REV B

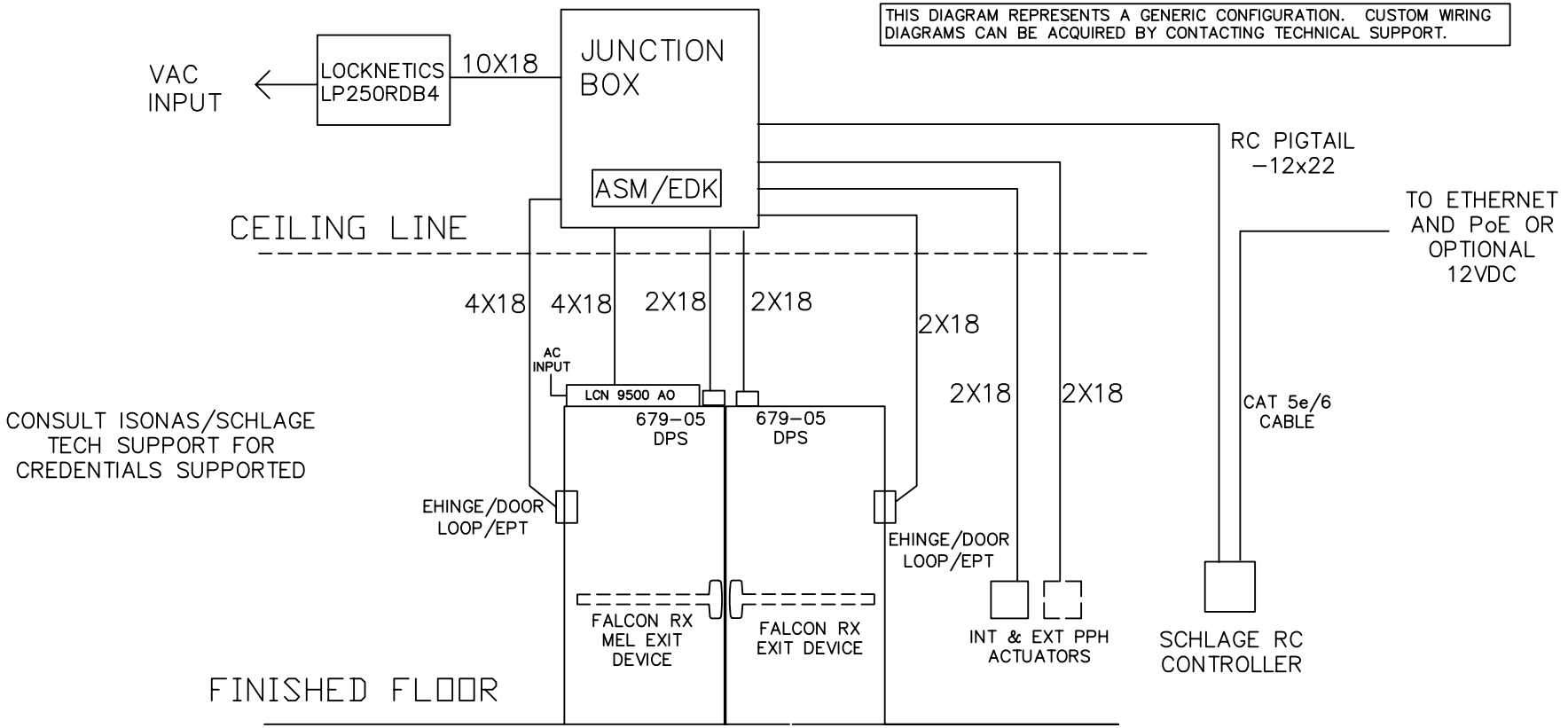

NOTES:
1) ALL LOW VOLTAGE WIRING TO BE STANDARD, MULTI-CONDUCTOR COLOR CODED WITHOUT SPLICES.

2) WIRING TO CONFORM TO APPLICABLE NATIONAL, STATE AND LOCAL ELECTRICAL CODES.

3) REFER TO SPECIFIC PRODUCT INSTALLATION INSTRUCTIONS FOR SPECIFIC WIRING REQUIREMENTS.

4) THIS DRAWING IS FOR GRAPHICAL REPRESENTATION OF PRODUCTS DETAILED IN THE HARDWARE SET ONLY.

5) * CONDUCTOR COUNT TO BE DETERMINED BY ACCESS CONTROL PANEL PROVIDER.

HARDWARE USED:
SCHLAGE RC CONTROLLER
SCHLAGE RC PIGTAIL
SCHLAGE ASM/EDK MODULE
1 FALCON RX MEL 24/25 EXIT DEVICE
1 FALCON RX 24/25 EXIT DEVICE
2 DOOR LOOP OR EHINGE OR EPT
LCN 9500 AO
2 LOCKNETICS PPH ACTUATORS
LOCKNETICS LP250RDB4
2 SCHLAGE 679-05 DPS
1 12 VDC DPDT RELAY
JUNCTION BOX

OPERATION:
DOORS NORMALLY CLOSED AND LOCKED.

ENTRY BY VALID CREDENTIAL OR KEY OVERRIDE. CREDENTIAL SIGNALS MEL LATCH RETRACTION, LHR LEAF, AND ENABLES EXTERIOR ACTUATOR. INTERIOR ACTUATOR ALWAYS ACTIVE.

RX SWITCHES IN EXIT DEVICES TO SHUNT DOOR FORCED ALARM.

CONFIRM PoE SOURCE SUFFICIENT FOR LOAD.

FREE EGRESS AT ALL TIMES.

DATE DRAWN: 10-20-20 REVISION DATE: 3-3-22

ALLEGION™

TITLE:
SCHLAGE RC CONTROLLER WITH RX MEL, RX, 9500 AO, DPS, LP250 PAIR OF DOORS

DRAWING TYPE: RISER DIAGRAM

DWG NO: 113768R

DRAWN/CHECKED BY: DOVE/TAMARCHENKO

REV B

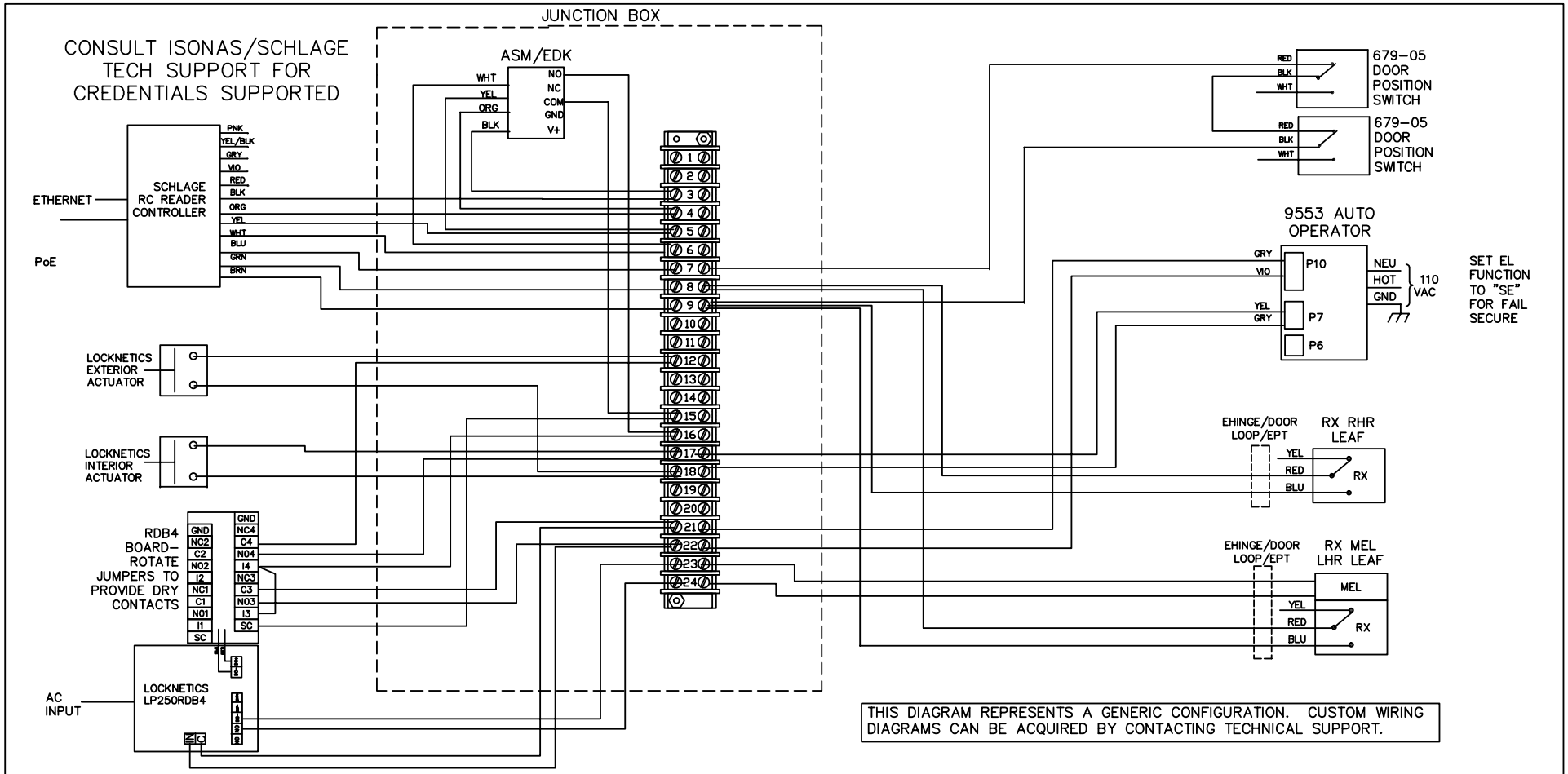

NOTES:
1) ALL LOW VOLTAGE WIRING TO BE STANDARD, MULTI-CONDUCTOR COLOR CODED WITHOUT SPLICES.

2) WIRING TO CONFORM TO APPLICABLE NATIONAL, STATE AND LOCAL ELECTRICAL CODES.

3) REFER TO SPECIFIC PRODUCT INSTALLATION INSTRUCTIONS FOR SPECIFIC WIRING REQUIREMENTS.

4) THIS DRAWING IS FOR GRAPHICAL REPRESENTATION OF PRODUCTS DETAILED IN THE HARDWARE SET ONLY.

5) * CONDUCTOR COUNT TO BE DETERMINED BY ACCESS CONTROL PANEL PROVIDER.

HARDWARE USED:
SCHLAGE RC CONTROLLER
SCHLAGE RC PIGTAIL
SCHLAGE ASM/EDK MODULE
1 FALCON RX MEL 24/25 EXIT DEVICE
1 FALCON RX 24/25 EXIT DEVICE
2 DOOR LOOP OR EHINGE OR EPT
LCN 9500 AO
2 LOCKNETICS PPH ACTUATORS
LOCKNETICS LP250RDB4
2 SCHLAGE 679-05 DPS
1 12 VDC DPDT RELAY
JUNCTION BOX

OPERATION:
DOORS NORMALLY CLOSED AND LOCKED.

ENTRY BY VALID CREDENTIAL OR KEY OVERRIDE. CREDENTIAL SIGNALS MEL LATCH RETRACTION, LHR LEAF, AND ENABLES EXTERIOR ACTUATOR. INTERIOR ACTUATOR ALWAYS ACTIVE.

RX SWITCHES IN EXIT DEVICES TO SHUNT DOOR FORCED ALARM.

CONFIRM PoE SOURCE SUFFICIENT FOR LOAD.

FREE EGRESS AT ALL TIMES.

DATE DRAWN: 10-20-20 | REVISION DATE: 3-3-22

ALLEGION™

TITLE:
SCHLAGE RC CONTROLLER WITH RX MEL, RX, 9500 AO, DPS, LP250 PAIR OF DOORS

DRAWING TYPE:	DWG NO:	REV
WIRING DIAGRAM	113768W	B
	DRAWN/CHECKED BY: DOVE/TAMARCHENKO	

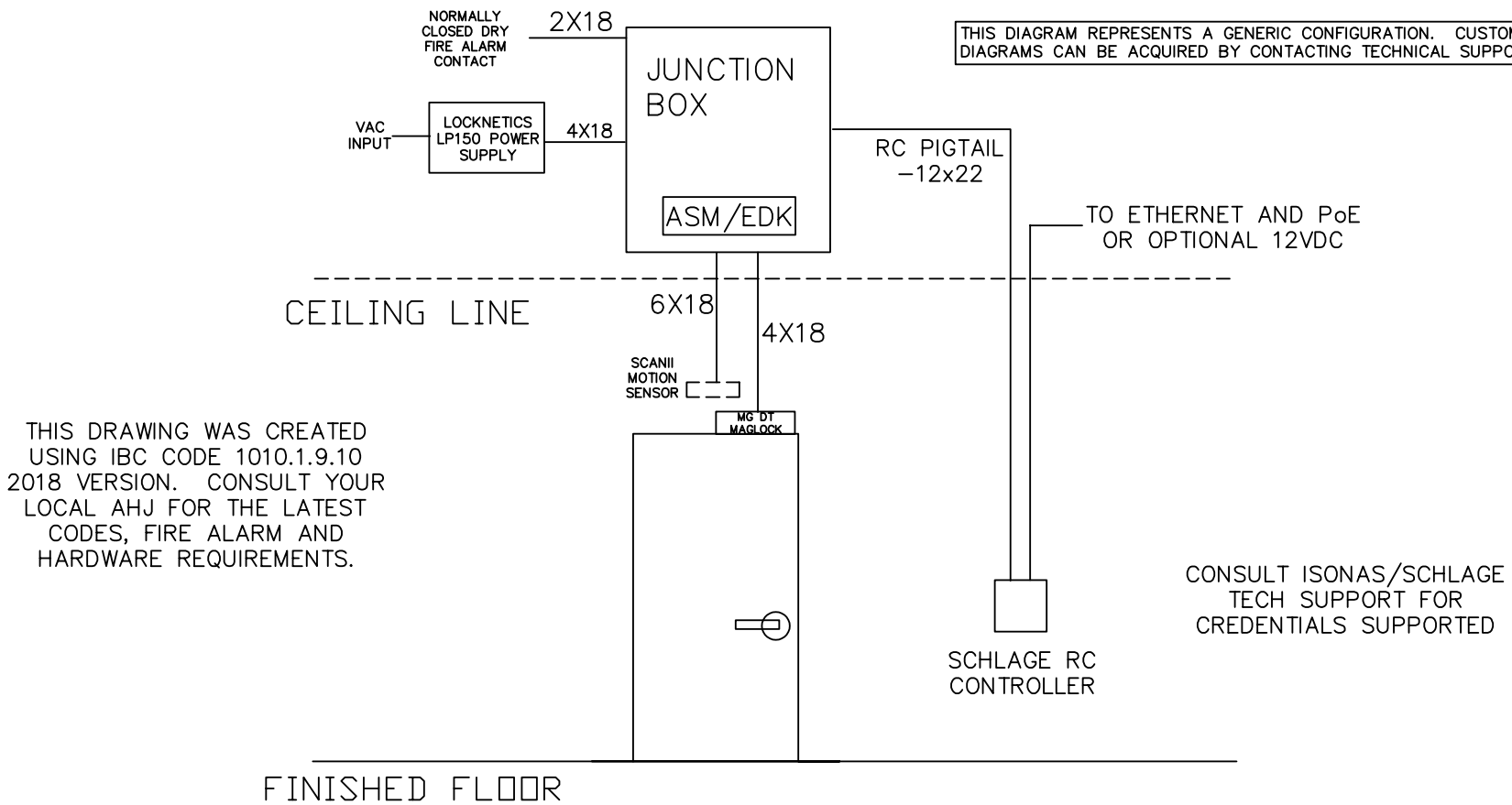

THIS DIAGRAM REPRESENTS A GENERIC CONFIGURATION. CUSTOM WIRING DIAGRAMS CAN BE ACQUIRED BY CONTACTING TECHNICAL SUPPORT.

THIS DRAWING WAS CREATED USING IBC CODE 1010.1.9.10 2018 VERSION. CONSULT YOUR LOCAL AHJ FOR THE LATEST CODES, FIRE ALARM AND HARDWARE REQUIREMENTS.

CONSULT ISONAS/SCHLAGE TECH SUPPORT FOR CREDENTIALS SUPPORTED

NOTES:
1) ALL LOW VOLTAGE WIRING TO BE STANDARD, MULTI-CONDUCTOR COLOR CODED WITHOUT SPLICES.

2) WIRING TO CONFORM TO APPLICABLE NATIONAL, STATE AND LOCAL ELECTRICAL CODES.

3) REFER TO SPECIFIC PRODUCT INSTALLATION INSTRUCTIONS FOR SPECIFIC WIRING REQUIREMENTS.

4) THIS DRAWING IS FOR GRAPHICAL REPRESENTATION OF PRODUCTS DETAILED IN THE HARDWARE SET ONLY.

5) * CONDUCTOR COUNT TO BE DETERMINED BY ACCESS CONTROL PANEL PROVIDER.

HARDWARE USED:
- SCHLAGE RC CONTROLLER
- SCHLAGE RC PIGTAIL
- SCHLAGE ASM/EDK MODULE
- SCHLAGE MAGLOCK IN-RUSH SUPPRESSOR
- LOCKNETICS MG DT MAGLOCK WITH INTEGRATED DPS
- LOCKNETICS LP150 POWER SUPPLY
- SCHLAGE SCANII MOTION SENSOR
- JUNCTION BOX

OPERATION:
DOORS NORMALLY CLOSED AND LOCKED.

ENTRY BY VALID CREDENTIAL TO RELEASE MG MAGLOCK.

MOTION SENSOR TO SHUNT DOOR FORCED ALARM AND RELEASE MG MAGLOCK.

FIRE ALARM TO RELEASE MG MAGLOCK.

INSURE PoE+ POWER SOURCE APPROPRIATE FOR LOAD.

FREE EGRESS AT ALL TIMES.

DATE DRAWN: 10-20-20

REVISION DATE: 3-3-22

ALLEGION™

TITLE: SCHLAGE RC CONTROLLER WITH MAGLOCK-SINGLE DOOR

DRAWING TYPE: RISER DIAGRAM

DWG NO: 113769R

DRAWN/CHECKED BY: DOVE/TAMARCHENKO

REV B

CONSULT ISONAS/SCHLAGE
TECH SUPPORT FOR
CREDENTIALS SUPPORTED

THIS DIAGRAM REPRESENTS A GENERIC CONFIGURATION. CUSTOM WIRING DIAGRAMS CAN BE ACQUIRED BY CONTACTING TECHNICAL SUPPORT.

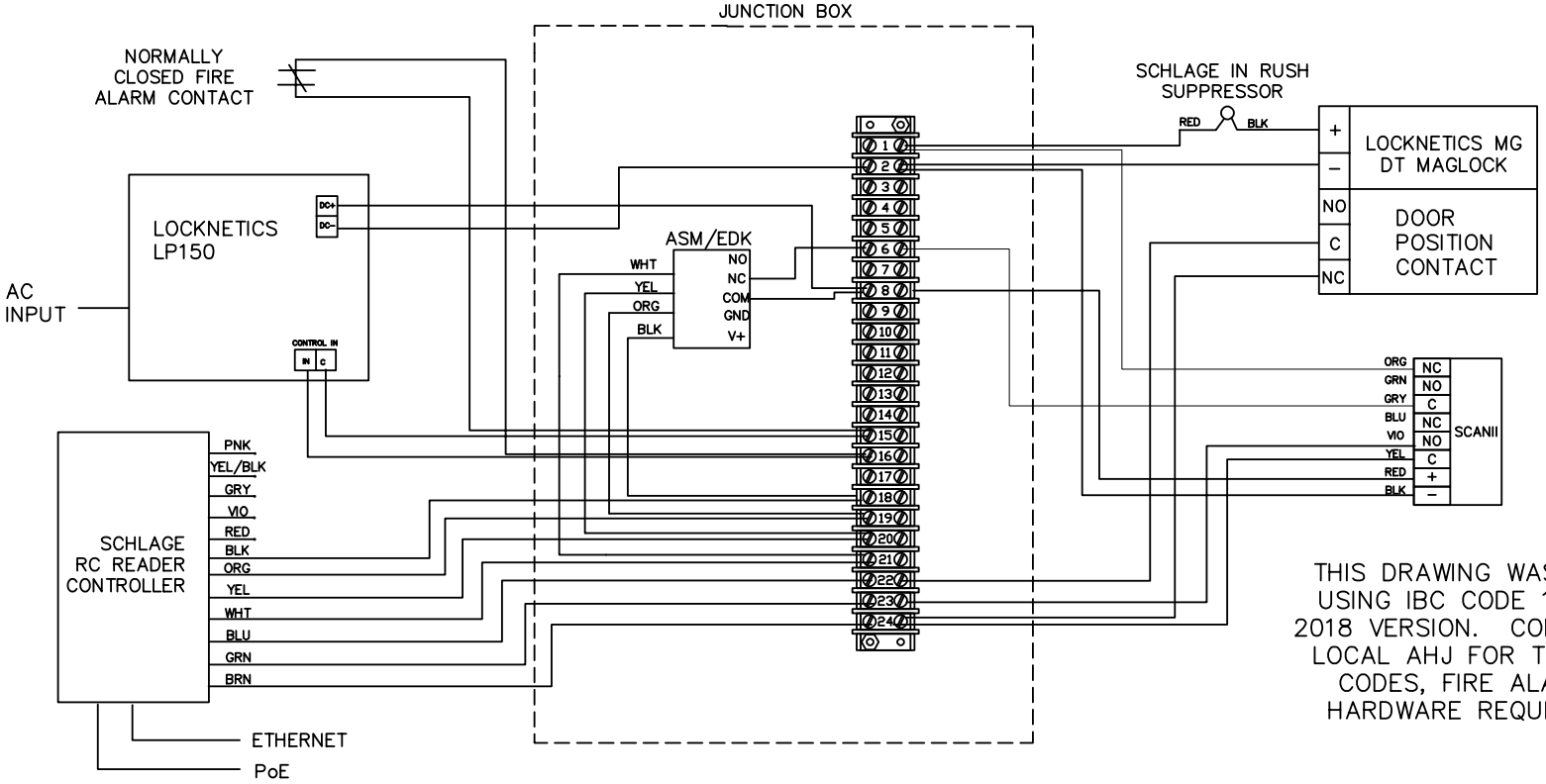

THIS DRAWING WAS CREATED USING IBC CODE 1010.1.9.10 2018 VERSION. CONSULT YOUR LOCAL AHJ FOR THE LATEST CODES, FIRE ALARM AND HARDWARE REQUIREMENTS.

NOTES:
1) ALL LOW VOLTAGE WIRING TO BE STANDARD, MULTI-CONDUCTOR COLOR CODED WITHOUT SPLICES.

2) WIRING TO CONFORM TO APPLICABLE NATIONAL, STATE AND LOCAL ELECTRICAL CODES.

3) REFER TO SPECIFIC PRODUCT INSTALLATION INSTRUCTIONS FOR SPECIFIC WIRING REQUIREMENTS.

4) THIS DRAWING IS FOR GRAPHICAL REPRESENTATION OF PRODUCTS DETAILED IN THE HARDWARE SET ONLY.

HARDWARE USED:

SCHLAGE RC CONTROLLER
SCHLAGE RC PIGTAIL
SCHLAGE ASM/EDK MODULE
SCHLAGE MAGLOCK IN-RUSH SUPPRESSOR
LOCKNETICS MG DT MAGLOCK WITH INTEGRATED DPS
LOCKNETICS LP150 POWER SUPPLY
SCHLAGE SCANII MOTION SENSOR
JUNCTION BOX

OPERATION:
DOORS NORMALLY CLOSED AND LOCKED.

ENTRY BY VALID CREDENTIAL TO RELEASE MG MAGLOCK.

MOTION SENSOR TO SHUNT DOOR FORCED ALARM AND RELEASE MG MAGLOCK.

FIRE ALARM TO RELEASE MG MAGLOCK.

INSURE PoE+ POWER SOURCE APPROPRIATE FOR LOAD.

FREE EGRESS AT ALL TIMES.

DATE DRAWN: 10-20-20

REVISION DATE: 3-3-22

ALLEGION™

TITLE: SCHLAGE RC CONTROLLER WITH MAGLOCK-SINGLE DOOR

DRAWING TYPE: WIRING DIAGRAM

DWG NO: 113769R

DRAWN/CHECKED BY: DOVE/TAMARCHENKO

REV B

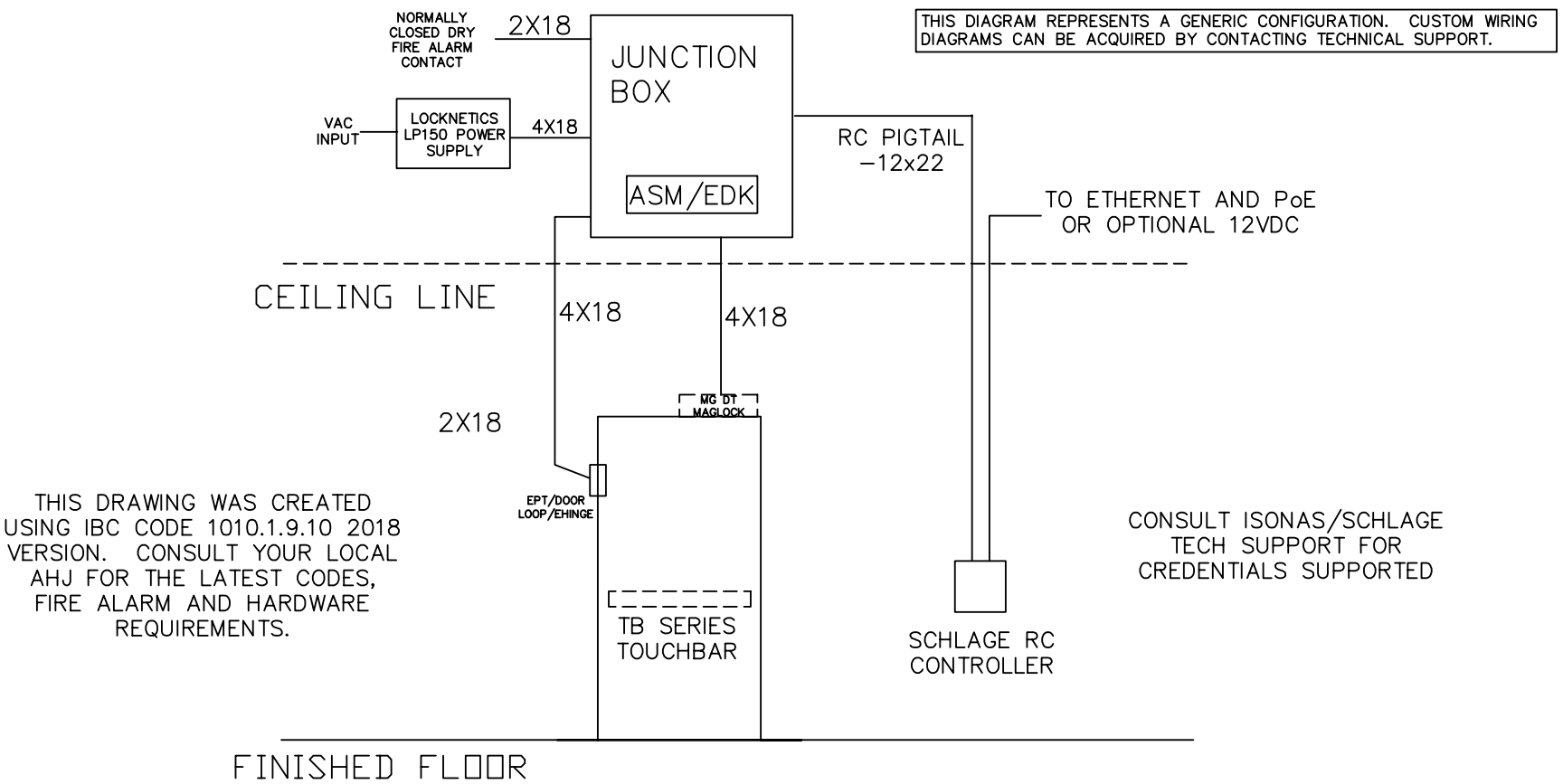

THIS DIAGRAM REPRESENTS A GENERIC CONFIGURATION. CUSTOM WIRING DIAGRAMS CAN BE ACQUIRED BY CONTACTING TECHNICAL SUPPORT.

THIS DRAWING WAS CREATED USING IBC CODE 1010.1.9.10 2018 VERSION. CONSULT YOUR LOCAL AHJ FOR THE LATEST CODES, FIRE ALARM AND HARDWARE REQUIREMENTS.

CONSULT ISONAS/SCHLAGE TECH SUPPORT FOR CREDENTIALS SUPPORTED

NOTES:
1) ALL LOW VOLTAGE WIRING TO BE STANDARD, MULTI-CONDUCTOR COLOR CODED WITHOUT SPLICES.

2) WIRING TO CONFORM TO APPLICABLE NATIONAL, STATE AND LOCAL ELECTRICAL CODES.

3) REFER TO SPECIFIC PRODUCT INSTALLATION INSTRUCTIONS FOR SPECIFIC WIRING REQUIREMENTS.

4) THIS DRAWING IS FOR GRAPHICAL REPRESENTATION OF PRODUCTS DETAILED IN THE HARDWARE SET ONLY.

5) * CONDUCTOR COUNT TO BE DETERMINED BY ACCESS CONTROL PANEL PROVIDER.

HARDWARE USED:
SCHLAGE RC CONTROLLER
SCHLAGE RC PIGTAIL
SCHLAGE ASM/EDK MODULE
SCHLAGE RC DIODE
LOCKNETICS MG DT MAGLOCK WITH INTEGRATED DPS
LOCKNETICS LP150 POWER SUPPLY
LOCKNETICS TB TOUCH BAR
EPT/DOOR LOOP/EHINGE
JUNCTION BOX

OPERATION:
DOORS NORMALLY CLOSED AND LOCKED.

ENTRY BY VALID CREDENTIAL TO RELEASE MG MAGLOCK OR EXIT BY PRESSING TB TOUCHBAR. TOUCHBAR TO ALSO NOTIFY ACCESS CONTROL SYSTEM OF AUTHORIZED ACCESS.

INSURE PoE+ POWER SOURCE APPROPRIATE FOR LOAD.

FREE EGRESS AT ALL TIMES.

DATE DRAWN: 10-20-20
REVISION DATE: 2-25-22

ALLEGION™

TITLE:
SCHLAGE RC CONTROLLER WITH MAGLOCK, TOUCH BAR -SINGLE DOOR

DRAWING TYPE: RISER DIAGRAM
DWG NO: 113770R
DRAWN/CHECKED BY: DOVE/TAMARCHENKO
REV B

THIS DIAGRAM REPRESENTS A GENERIC CONFIGURATION. CUSTOM WIRING DIAGRAMS CAN BE ACQUIRED BY CONTACTING TECHNICAL SUPPORT.

THIS DRAWING WAS CREATED USING IBC CODE 1010.1.9.10 2018 VERSION. CONSULT YOUR LOCAL AHJ FOR THE LATEST CODES, FIRE ALARM AND HARDWARE REQUIREMENTS.

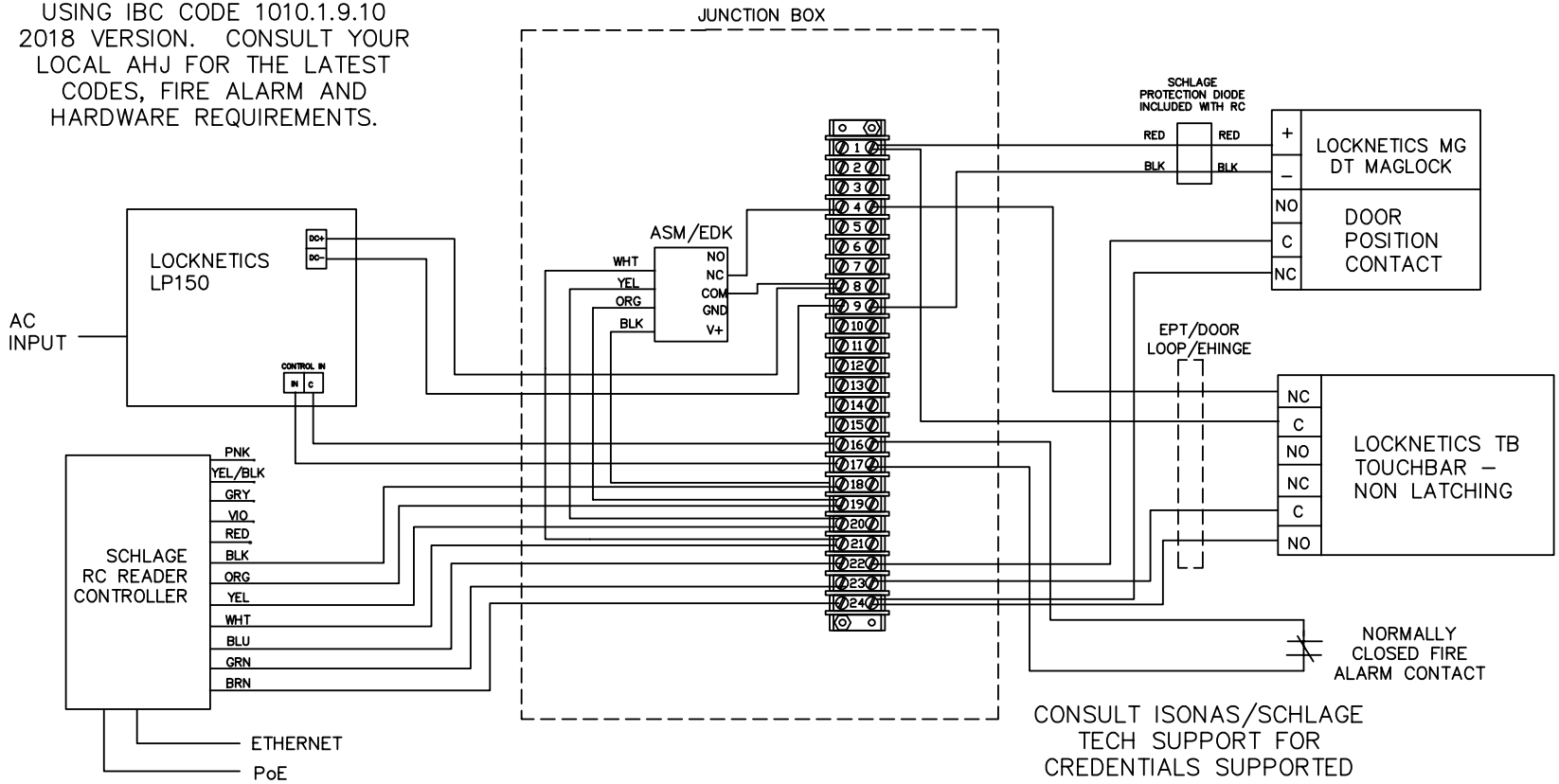

CONSULT ISONAS/SCHLAGE TECH SUPPORT FOR CREDENTIALS SUPPORTED

NOTES:
1) ALL LOW VOLTAGE WIRING TO BE STANDARD, MULTI-CONDUCTOR COLOR CODED WITHOUT SPLICES.

2) WIRING TO CONFORM TO APPLICABLE NATIONAL, STATE AND LOCAL ELECTRICAL CODES.

3) REFER TO SPECIFIC PRODUCT INSTALLATION INSTRUCTIONS FOR SPECIFIC WIRING REQUIREMENTS.

4) THIS DRAWING IS FOR GRAPHICAL REPRESENTATION OF PRODUCTS DETAILED IN THE HARDWARE SET ONLY.

HARDWARE USED:
SCHLAGE RC CONTROLLER
SCHLAGE RC PIGTAIL
SCHLAGE ASM/EDK MODULE
SCHLAGE RC DIODE
LOCKNETICS MG DT MAGLOCK WITH INTEGRATED DPS
LOCKNETICS LP150 POWER SUPPLY
LOCKNETICS TB TOUCH BAR
EPT/DOOR LOOP/EHINGE
JUNCTION BOX

OPERATION:
DOORS NORMALLY CLOSED AND LOCKED.

ENTRY BY VALID CREDENTIAL TO RELEASE MG MAGLOCK OR EXIT BY PRESSING TB TOUCHBAR. TOUCHBAR TO ALSO NOTIFY ACCESS CONTROL SYSTEM OF AUTHORIZED ACCESS.

FIRE ALARM TO RELEASE MG MAGLOCK.

INSURE PoE+ POWER SOURCE APPROPRIATE FOR LOAD.

FREE EGRESS AT ALL TIMES.

DATE DRAWN: 10-20-20

REVISION DATE: 2-25-22

ALLEGION™

TITLE:
SCHLAGE RC CONTROLLER WITH MAGLOCK, TOUCH BAR -SINGLE DOOR

DRAWING TYPE: WIRING DIAGRAM

DWG NO: 113770W

DRAWN/CHECKED BY: DOVE/TAMARCHENKO

REV B

THIS DIAGRAM REPRESENTS A GENERIC CONFIGURATION. CUSTOM WIRING DIAGRAMS CAN BE ACQUIRED BY CONTACTING TECHNICAL SUPPORT.

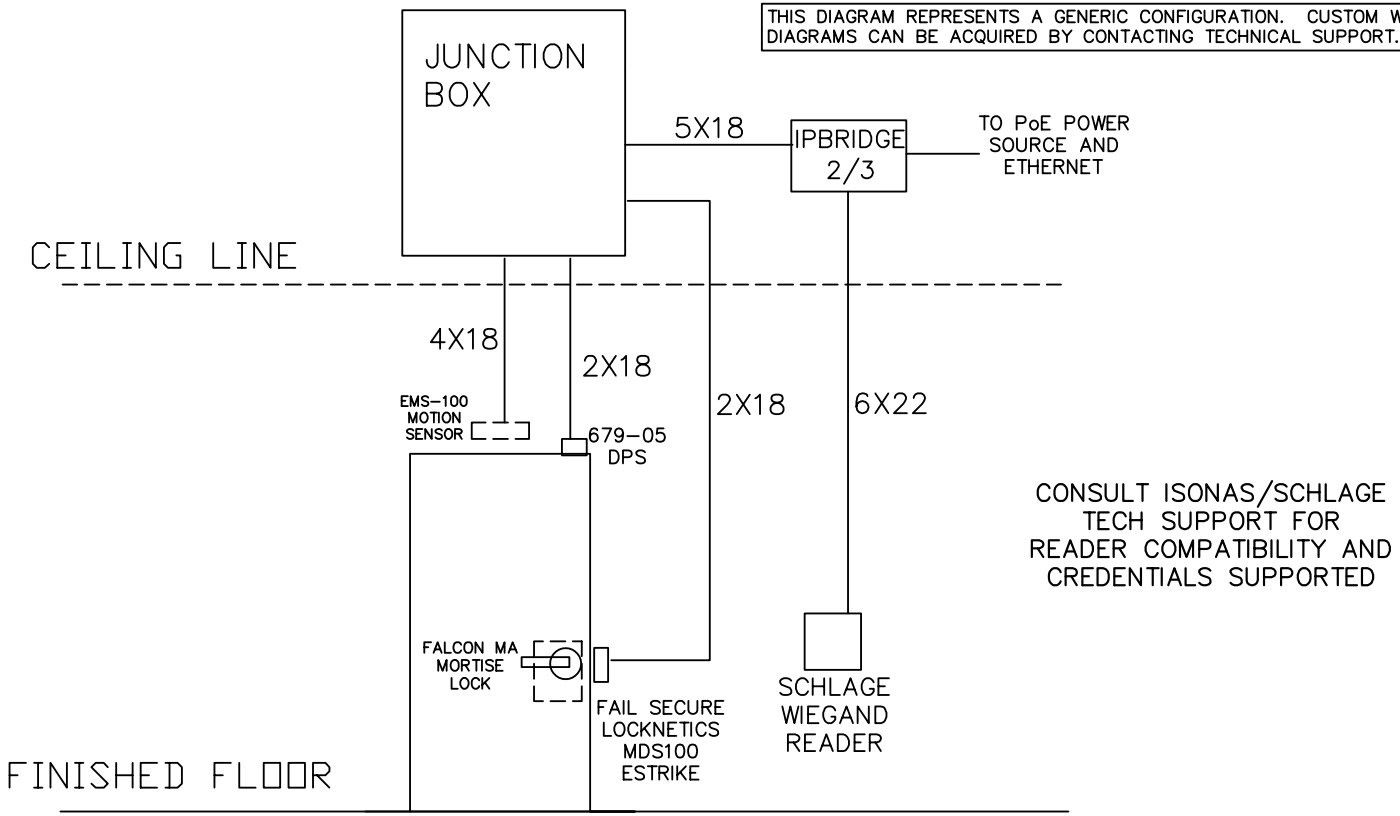

NOTES:
1) ALL LOW VOLTAGE WIRING TO BE STANDARD, MULTI-CONDUCTOR COLOR CODED WITHOUT SPLICES.

2) WIRING TO CONFORM TO APPLICABLE NATIONAL, STATE AND LOCAL ELECTRICAL CODES.

3) REFER TO SPECIFIC PRODUCT INSTALLATION INSTRUCTIONS FOR SPECIFIC WIRING REQUIREMENTS.

4) THIS DRAWING IS FOR GRAPHICAL REPRESENTATION OF PRODUCTS DETAILED IN THE HARDWARE SET ONLY.

5) * CONDUCTOR COUNT TO BE DETERMINED BY ACCESS CONTROL PANEL PROVIDER.

HARDWARE USED:
SCHLAGE IPBRIDGE
SCHLAGE WIEGAND READER
LOCKNETICS MDS100 STRIKE
LOCKNETICS EMS-100 MOTION SENSOR
SCHLAGE 679-05 DPS
JUNCTION BOX

OPERATION:
DOORS NORMALLY CLOSED AND LOCKED.

ENTRY BY VALID CREDENTIAL OR KEY OVERRIDE.

MOTION SENSOR TO SHUNT DOOR FORCED ALARM.

FREE EGRESS AT ALL TIMES.

VERIFY PoE+ POWER SOURCE ADEQUATE FOR LOAD.

DATE DRAWN: 10-21-20
REVISION DATE: 3-7-22

ALLEGION™

TITLE: ISONAS IP BRIDGE WITH ESTRIKE-SINGLE DOOR

DRAWING TYPE: RISER DIAGRAM
DWG NO: 113771R
REV B
DRAWN/CHECKED BY: DOVE/TAMARCHENKO

THIS DIAGRAM REPRESENTS A GENERIC CONFIGURATION. CUSTOM WIRING DIAGRAMS CAN BE ACQUIRED BY CONTACTING TECHNICAL SUPPORT.

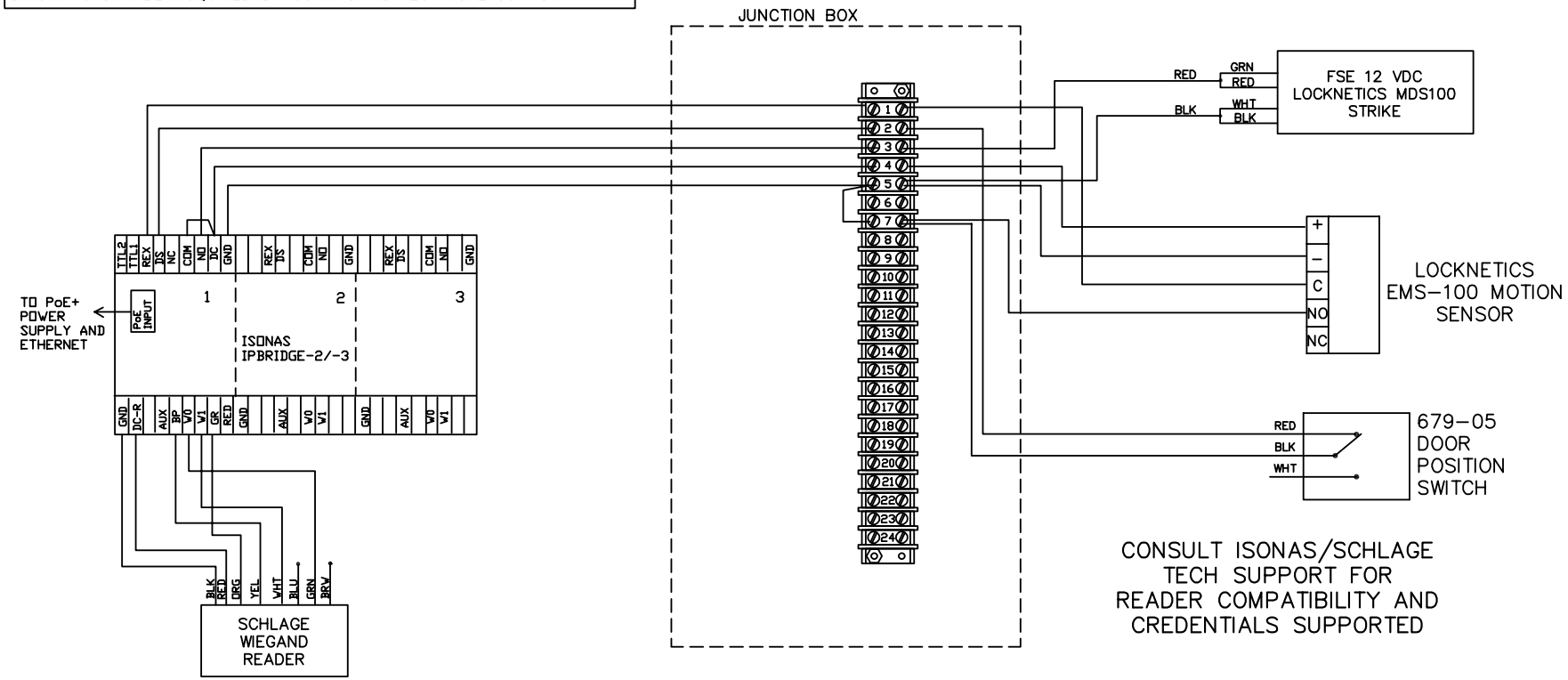

NOTES:
1) ALL LOW VOLTAGE WIRING TO BE STANDARD, MULTI-CONDUCTOR COLOR CODED WITHOUT SPLICES.

2) WIRING TO CONFORM TO APPLICABLE NATIONAL, STATE AND LOCAL ELECTRICAL CODES.

3) REFER TO SPECIFIC PRODUCT INSTALLATION INSTRUCTIONS FOR SPECIFIC WIRING REQUIREMENTS.

4) THIS DRAWING IS FOR GRAPHICAL REPRESENTATION OF PRODUCTS DETAILED IN THE HARDWARE SET ONLY.

HARDWARE USED:
SCHLAGE IPBRIDGE
SCHLAGE WIEGAND READER
LOCKNETICS MDS100 STRIKE
LOCKNETICS EMS-100 MOTION SENSOR
SCHLAGE 679-05 DPS
JUNCTION BOX

OPERATION:
DOORS NORMALLY CLOSED AND LOCKED.

ENTRY BY VALID CREDENTIAL OR KEY OVERRIDE.

MOTION SENSOR TO SHUNT DOOR FORCED ALARM.

FREE EGRESS AT ALL TIMES.

VERIFY PoE+ POWER SOURCE ADEQUATE FOR LOAD.

DATE DRAWN: 10-21-20 | REVISION DATE: 3-7-22

ALLEGION™

TITLE: ISONAS IP BRIDGE WITH ESTRIKE-SINGLE DOOR

DRAWING TYPE: WIRING DIAGRAM

DWG NO: 113771W

DRAWN/CHECKED BY: DOVE/TAMARCHENKO

REV B

THIS DIAGRAM REPRESENTS A GENERIC CONFIGURATION. CUSTOM WIRING DIAGRAMS CAN BE ACQUIRED BY CONTACTING TECHNICAL SUPPORT.

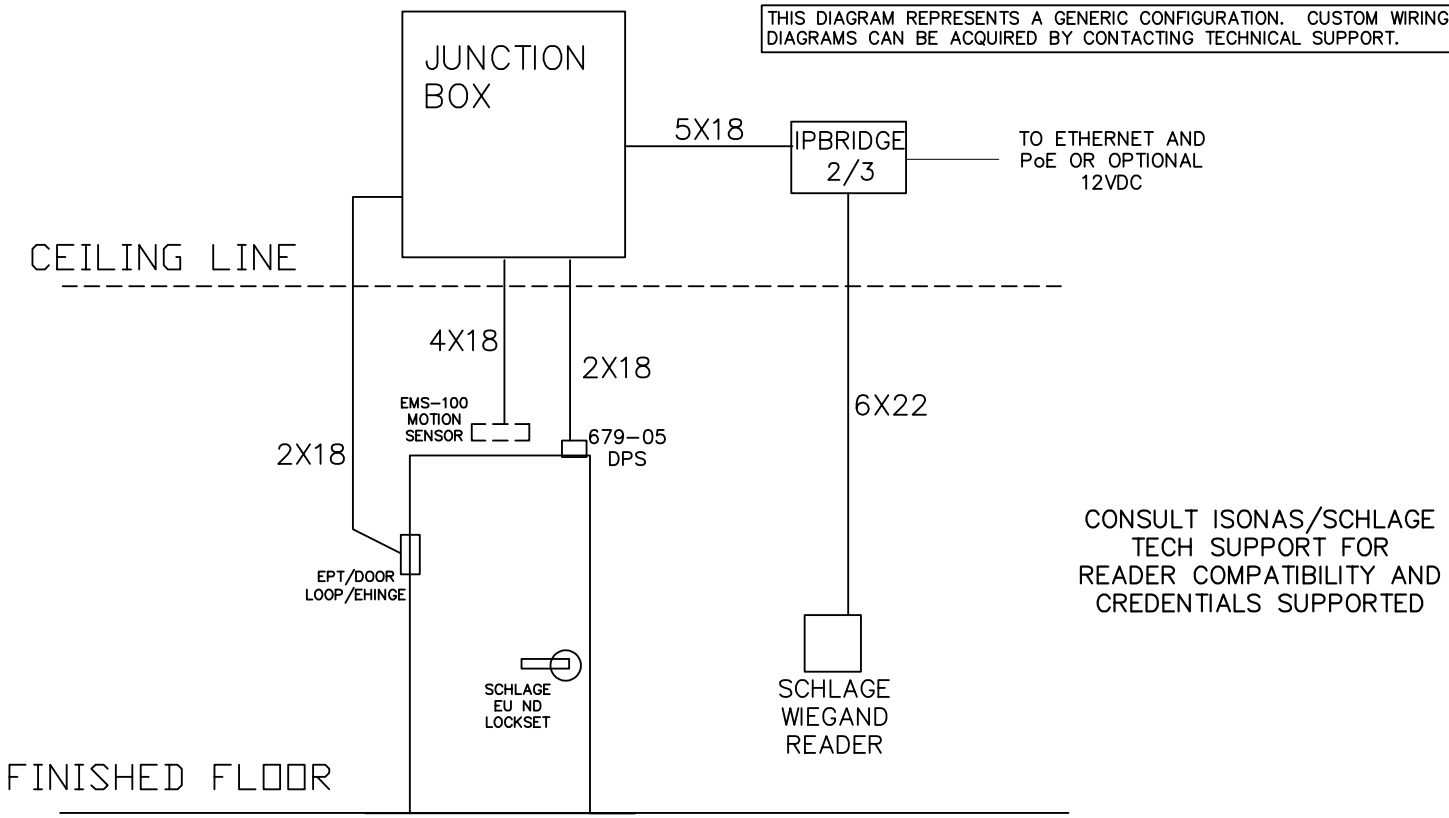

CONSULT ISONAS/SCHLAGE TECH SUPPORT FOR READER COMPATIBILITY AND CREDENTIALS SUPPORTED

NOTES:
1) ALL LOW VOLTAGE WIRING TO BE STANDARD, MULTI-CONDUCTOR COLOR CODED WITHOUT SPLICES.

2) WIRING TO CONFORM TO APPLICABLE NATIONAL, STATE AND LOCAL ELECTRICAL CODES.

3) REFER TO SPECIFIC PRODUCT INSTALLATION INSTRUCTIONS FOR SPECIFIC WIRING REQUIREMENTS.

4) THIS DRAWING IS FOR GRAPHICAL REPRESENTATION OF PRODUCTS DETAILED IN THE HARDWARE SET ONLY.

5) * CONDUCTOR COUNT TO BE DETERMINED BY ACCESS CONTROL PANEL PROVIDER.

HARDWARE USED:
ISONAS IPBRIDGE
SCHLAGE WIEGAND READER
SCHLAGE EU ND LOCKSET
LOCKNETICS EMS-100 MOTION SENSOR
EPT/DOOR LOOP/EHINGE
SCHLAGE 679-05 DPS
JUNCTION BOX

OPERATION:
DOORS NORMALLY CLOSED AND LOCKED.

ENTRY BY VALID CREDENTIAL OR KEY OVERRIDE. VALID CREDENTIAL WILL UNLOCK EU ND LOCKSET.

MOTION SENSOR TO SHUNT DOOR FORCED ALARM.

FREE EGRESS AT ALL TIMES.

VERIFY PoE+ POWER SOURCE ADEQUATE FOR LOAD.

DATE DRAWN: 10-21-20
REVISION DATE: 3-7-22

ALLEGION™

TITLE: ISONAS IP BRIDGE WITH ELOCK-SINGLE DOOR

DRAWING TYPE: RISER DIAGRAM
DWG NO: 113772R
REV B
DRAWN/CHECKED BY: DOVE/TAMARCHENKO

THIS DIAGRAM REPRESENTS A GENERIC CONFIGURATION. CUSTOM WIRING DIAGRAMS CAN BE ACQUIRED BY CONTACTING TECHNICAL SUPPORT.

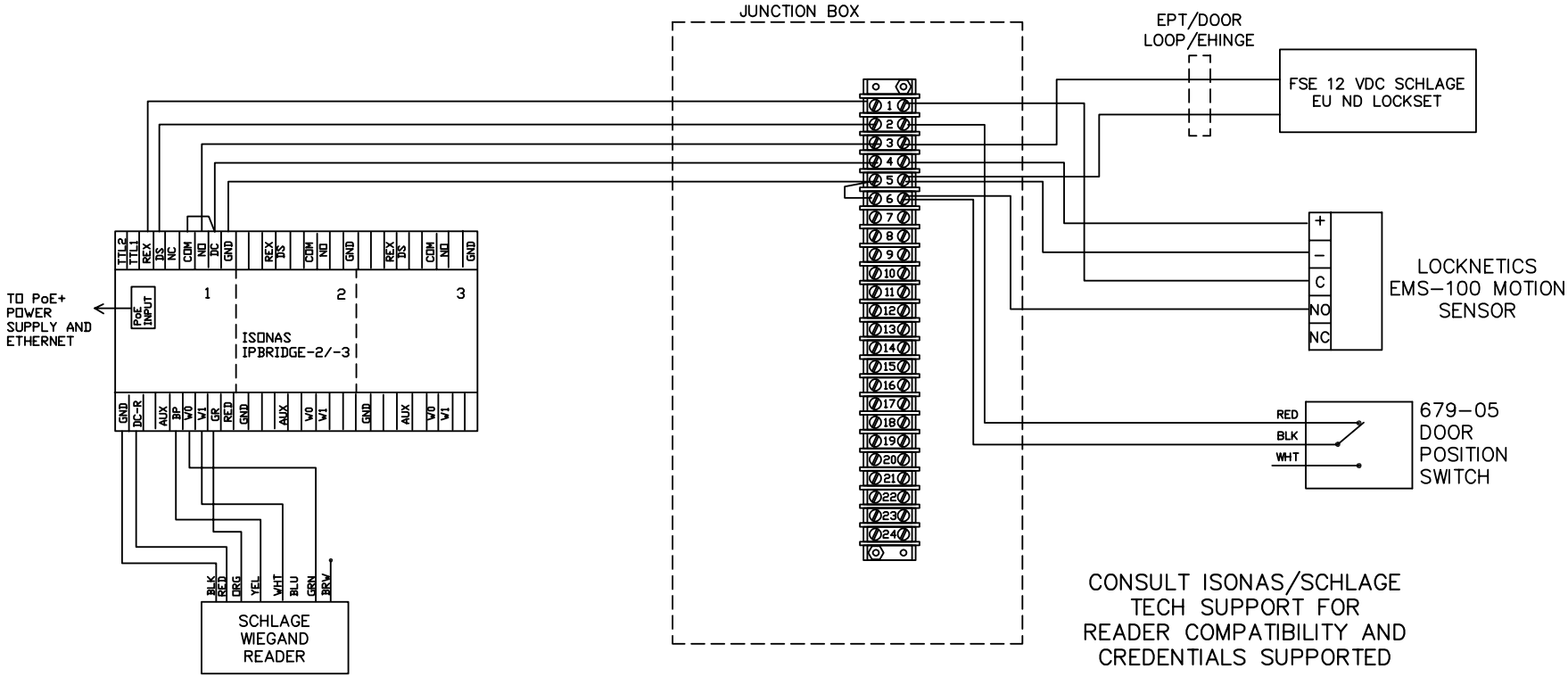

CONSULT ISONAS/SCHLAGE TECH SUPPORT FOR READER COMPATIBILITY AND CREDENTIALS SUPPORTED

NOTES:
1) ALL LOW VOLTAGE WIRING TO BE STANDARD, MULTI-CONDUCTOR COLOR CODED WITHOUT SPLICES.

2) WIRING TO CONFORM TO APPLICABLE NATIONAL, STATE AND LOCAL ELECTRICAL CODES.

3) REFER TO SPECIFIC PRODUCT INSTALLATION INSTRUCTIONS FOR SPECIFIC WIRING REQUIREMENTS.

4) THIS DRAWING IS FOR GRAPHICAL REPRESENTATION OF PRODUCTS DETAILED IN THE HARDWARE SET ONLY.

HARDWARE USED:

ISONAS IPBRIDGE
SCHLAGE WIEGAND READER
SCHLAGE EU ND LOCKSET
LOCKNETICS EMS-100 MOTION SENSOR
SCHLAGE 679-05 DPS
EPT/DOOR LOOP/EHINGE
JUNCTION BOX

OPERATION:
DOORS NORMALLY CLOSED AND LOCKED.

ENTRY BY VALID CREDENTIAL OR KEY OVERRIDE. VALID CREDENTIAL WILL UNLOCK EU ND LOCKSET.

MOTION SENSOR TO SHUNT DOOR FORCED ALARM.

FREE EGRESS AT ALL TIMES.

VERIFY PoE+ POWER SOURCE ADEQUATE FOR LOAD.

DATE DRAWN: 10-21-20
REVISION DATE: 3-7-22

ALLEGION™

TITLE: ISONAS IP BRIDGE WITH ELOCK-SINGLE DOOR

DRAWING TYPE: WIRING DIAGRAM
DWG NO: 113772W
REV: B
DRAWN/CHECKED BY: DOVE/TAMARCHENKO

THIS DIAGRAM REPRESENTS A GENERIC CONFIGURATION. CUSTOM WIRING DIAGRAMS CAN BE ACQUIRED BY CONTACTING TECHNICAL SUPPORT.

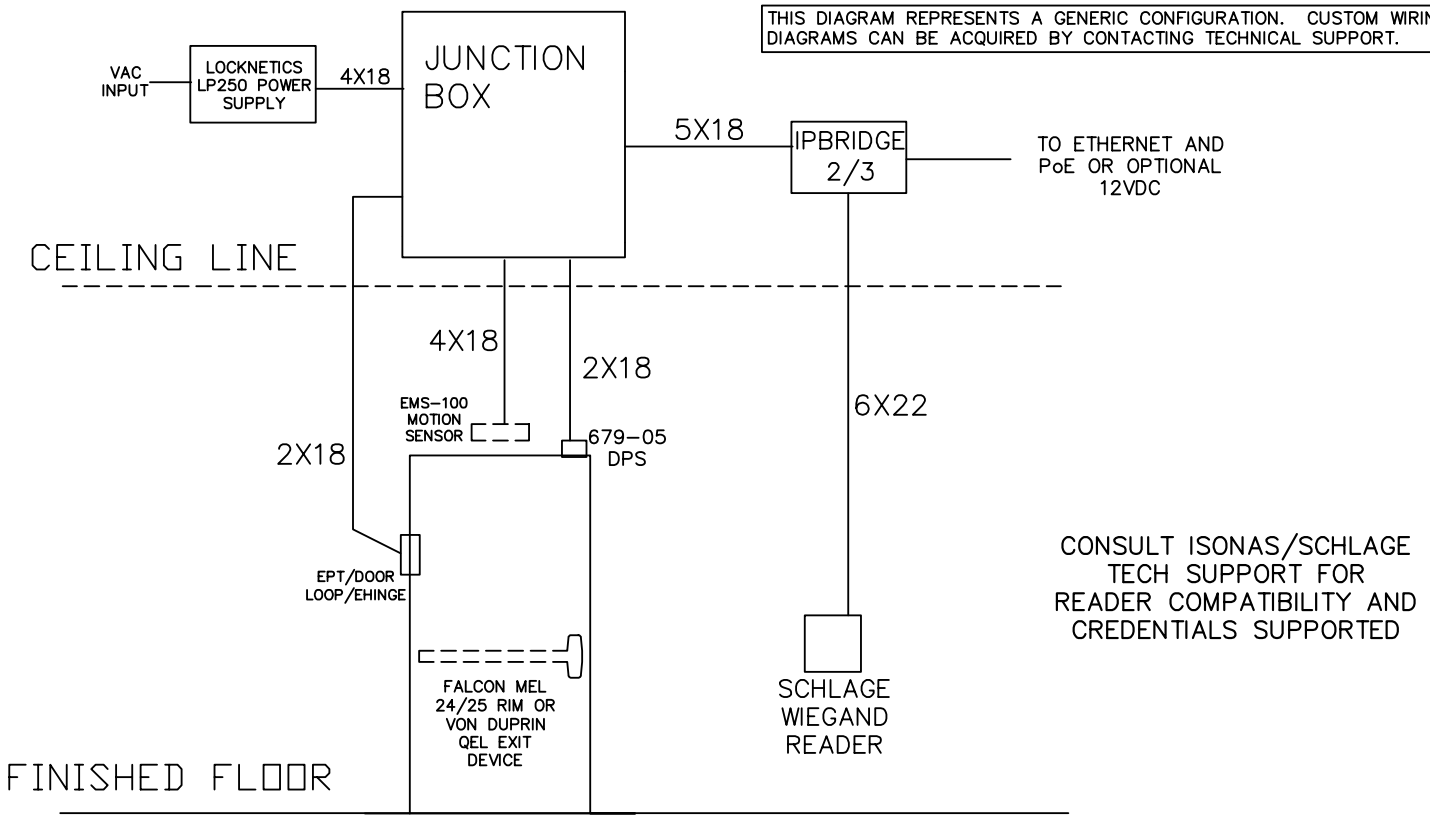

CONSULT ISONAS/SCHLAGE TECH SUPPORT FOR READER COMPATIBILITY AND CREDENTIALS SUPPORTED

NOTES:
1) ALL LOW VOLTAGE WIRING TO BE STANDARD, MULTI-CONDUCTOR COLOR CODED WITHOUT SPLICES.

2) WIRING TO CONFORM TO APPLICABLE NATIONAL, STATE AND LOCAL ELECTRICAL CODES.

3) REFER TO SPECIFIC PRODUCT INSTALLATION INSTRUCTIONS FOR SPECIFIC WIRING REQUIREMENTS.

4) THIS DRAWING IS FOR GRAPHICAL REPRESENTATION OF PRODUCTS DETAILED IN THE HARDWARE SET ONLY.

5) * CONDUCTOR COUNT TO BE DETERMINED BY ACCESS CONTROL PANEL PROVIDER.

HARDWARE USED:
ISONAS IPBRIDGE
SCHLAGE WIEGAND READER
FALCON MEL24/25 OR VON DUPRIN QEL PANIC
LOCKNETICS LP250
LOCKNETICS EMS-100 MOTION SENSOR
SCHLAGE 679-05 DPS
EPT/DOOR LOOP/EHINGE
JUNCTION BOX

OPERATION:
DOORS NORMALLY CLOSED AND LOCKED.

ENTRY BY VALID CREDENTIAL OR KEY OVERRIDE. VALID CREDENTIAL WILL CAUSE MEL OR QEL TO RETRACT.

MOTION SENSOR TO SHUNT DOOR FORCED ALARM.

FREE EGRESS AT ALL TIMES.

VERIFY PoE+ POWER SOURCE ADEQUATE FOR LOAD.

DATE DRAWN: 10-21-20
REVISION DATE: 3-7-22

ALLEGION™

TITLE: ISONAS IP BRIDGE WITH QEL/MEL -SINGLE DOOR

DRAWING TYPE: RISER DIAGRAM
DWG NO: 113773R
REV B
DRAWN/CHECKED BY: DOVE/TAMARCHENKO

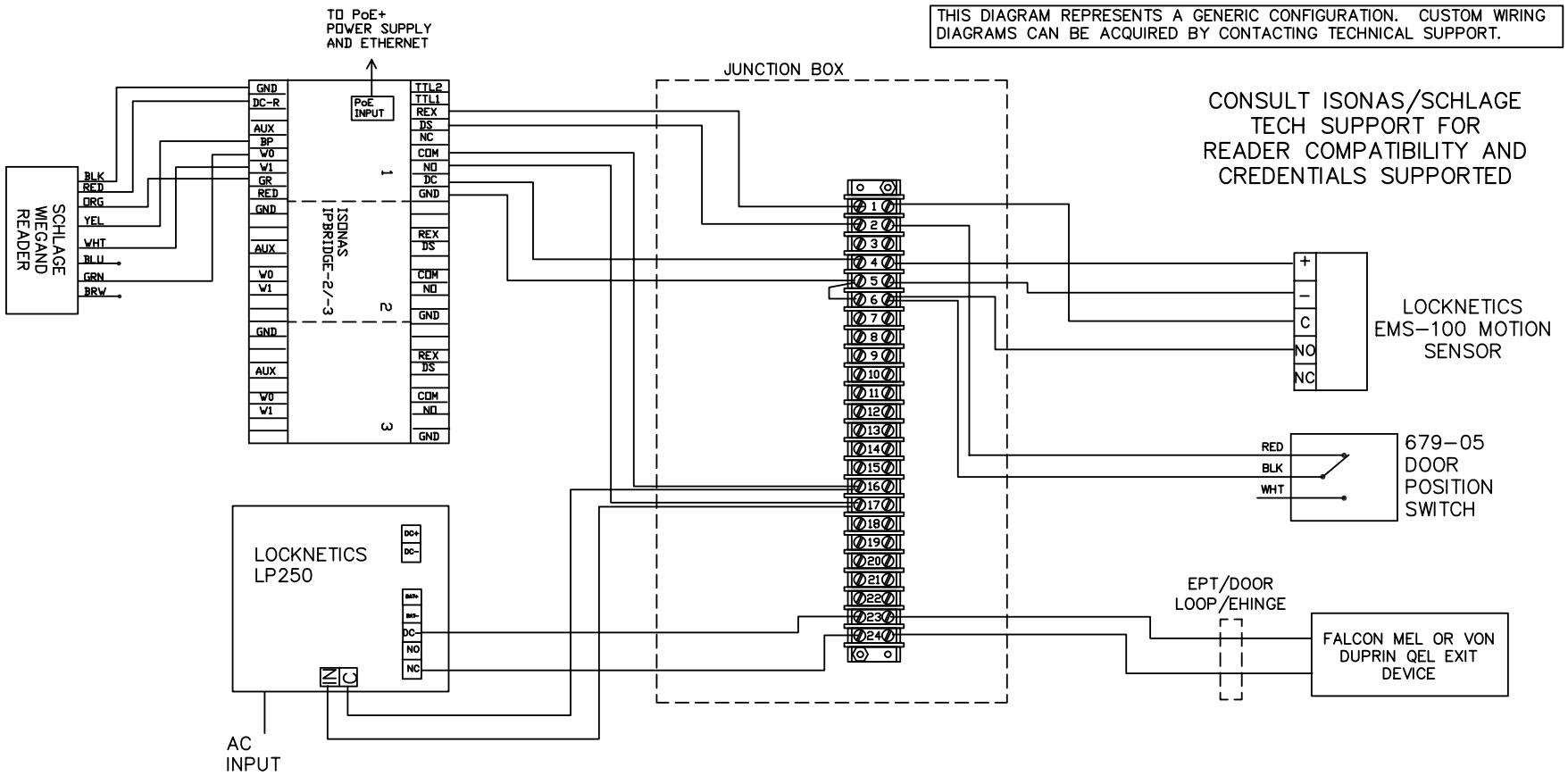

NOTES:
1) ALL LOW VOLTAGE WIRING TO BE STANDARD, MULTI-CONDUCTOR COLOR CODED WITHOUT SPLICES.

2) WIRING TO CONFORM TO APPLICABLE NATIONAL, STATE AND LOCAL ELECTRICAL CODES.

3) REFER TO SPECIFIC PRODUCT INSTALLATION INSTRUCTIONS FOR SPECIFIC WIRING REQUIREMENTS.

4) THIS DRAWING IS FOR GRAPHICAL REPRESENTATION OF PRODUCTS DETAILED IN THE HARDWARE SET ONLY.

HARDWARE USED:

ISONAS IPBRIDGE
SCHLAGE WIEGAND READER
FALCON MEL24/25 OR VON DUPRIN QEL PANIC
LOCKNETICS LP250
LOCKNETICS EMS-100 MOTION SENSOR
SCHLAGE 679-05 DPS
EPT/DOOR LOOP/EHINGE
JUNCTION BOX

OPERATION:
DOORS NORMALLY CLOSED AND LOCKED.

ENTRY BY VALID CREDENTIAL OR KEY OVERRIDE. VALID CREDENTIAL WILL CAUSE MEL OR QEL TO RETRACT.

MOTION SENSOR TO SHUNT DOOR FORCED ALARM.

FREE EGRESS AT ALL TIMES.

VERIFY PoE+ POWER SOURCE ADEQUATE FOR LOAD.

DATE DRAWN: 10-21-20
REVISION DATE: 3-7-22

ALLEGION™

TITLE: ISONAS IP BRIDGE WITH QEL/MEL -SINGLE DOOR

DRAWING TYPE: WIRING DIAGRAM
DWG NO: 113773W
DRAWN/CHECKED BY: DOVE/TAMARCHENKO
REV B

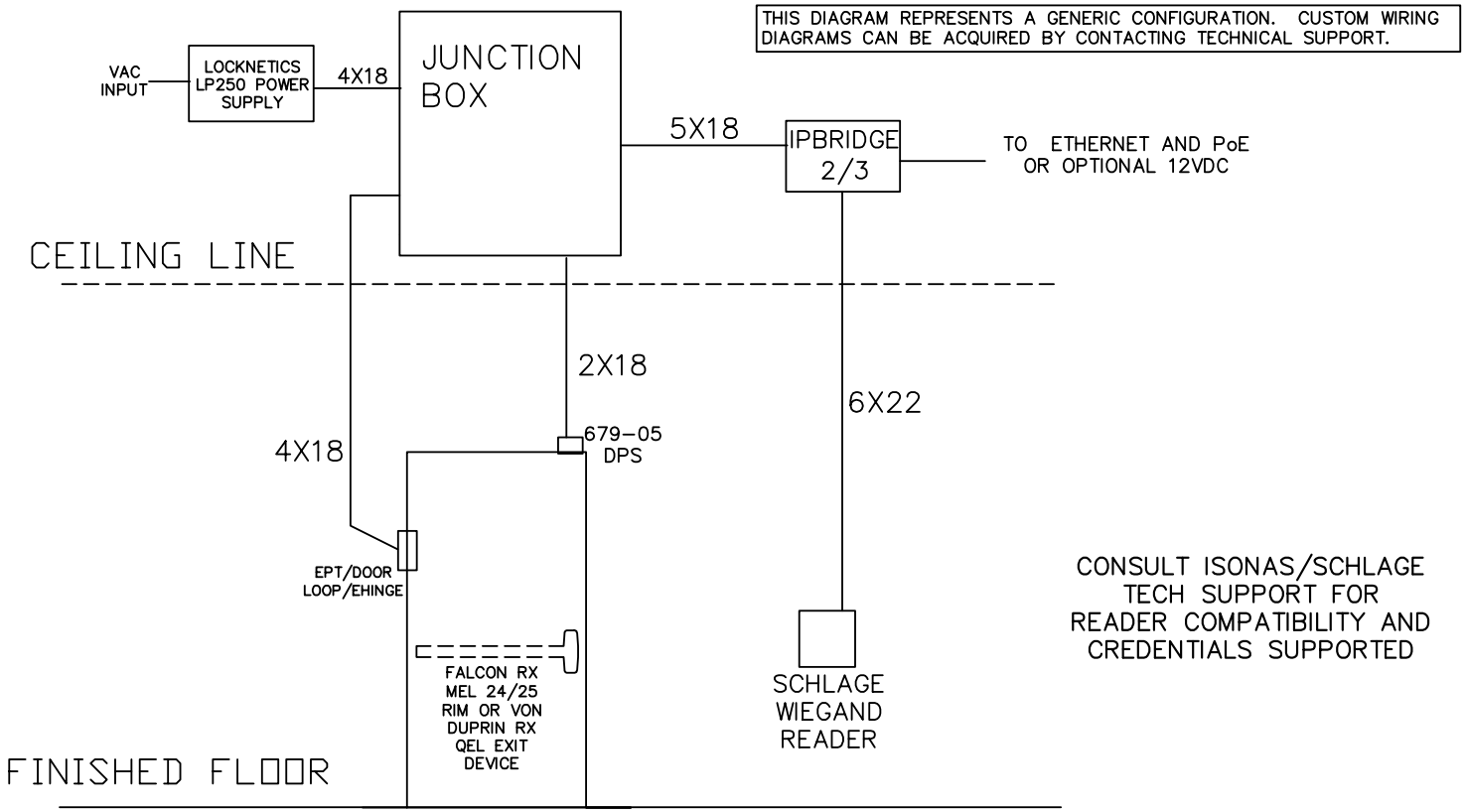

NOTES:
1) ALL LOW VOLTAGE WIRING TO BE STANDARD, MULTI-CONDUCTOR COLOR CODED WITHOUT SPLICES.

2) WIRING TO CONFORM TO APPLICABLE NATIONAL, STATE AND LOCAL ELECTRICAL CODES.

3) REFER TO SPECIFIC PRODUCT INSTALLATION INSTRUCTIONS FOR SPECIFIC WIRING REQUIREMENTS.

4) THIS DRAWING IS FOR GRAPHICAL REPRESENTATION OF PRODUCTS DETAILED IN THE HARDWARE SET ONLY.

5) * CONDUCTOR COUNT TO BE DETERMINED BY ACCESS CONTROL PANEL PROVIDER.

HARDWARE USED:
ISONAS IPBRIDGE
SCHLAGE WIEGAND READER
FALCON RX MEL 24/25 OR VON
DUPRIN RX QEL PANIC
LOCKNETICS LP250
EPT/DOOR LOOP/EHINGE
SCHLAGE 679-05 DPS
JUNCTION BOX

OPERATION:
DOORS NORMALLY CLOSED AND LOCKED.

ENTRY BY VALID CREDENTIAL OR KEY OVERRIDE. VALID CREDENTIAL WILL CAUSE MEL OR QEL TO RETRACT.

RX IN PANIC TO SHUNT DOOR FORCED ALARM.

FREE EGRESS AT ALL TIMES.
VERIFY PoE+ POWER SOURCE ADEQUATE FOR LOAD.

DATE DRAWN: 10-21-20
REVISION DATE: 3-7-22

ALLEGION™

TITLE: ISONAS IP BRIDGE WITH RX QEL/RX MEL -SINGLE DOOR

DRAWING TYPE: RISER DIAGRAM
DWG NO: 113774R
DRAWN/CHECKED BY: DOVE/TAMARCHENKO
REV B

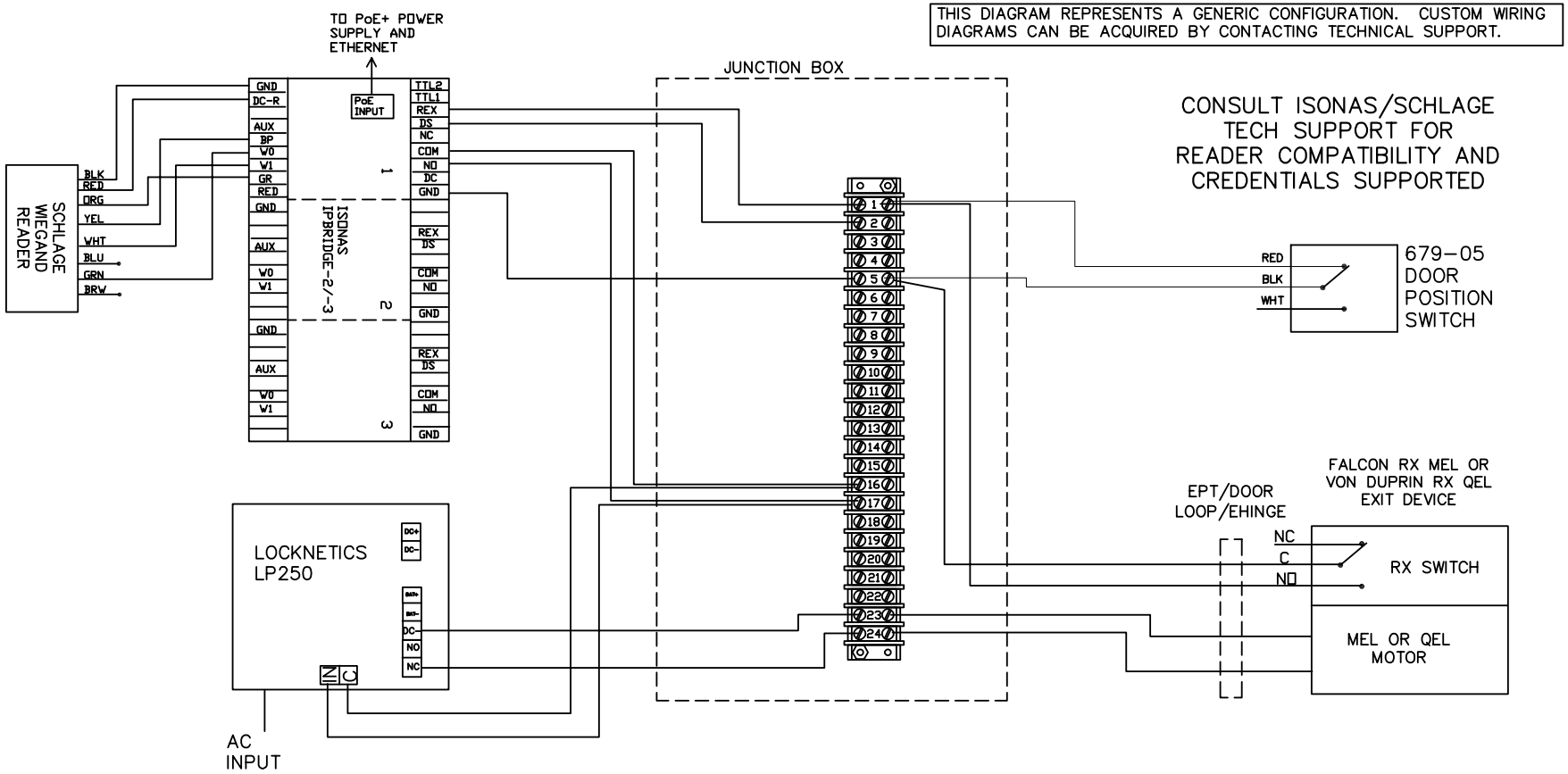

NOTES:
1) ALL LOW VOLTAGE WIRING TO BE STANDARD, MULTI-CONDUCTOR COLOR CODED WITHOUT SPLICES.

2) WIRING TO CONFORM TO APPLICABLE NATIONAL, STATE AND LOCAL ELECTRICAL CODES.

3) REFER TO SPECIFIC PRODUCT INSTALLATION INSTRUCTIONS FOR SPECIFIC WIRING REQUIREMENTS.

4) THIS DRAWING IS FOR GRAPHICAL REPRESENTATION OF PRODUCTS DETAILED IN THE HARDWARE SET ONLY.

HARDWARE USED:

ISONAS IPBRIDGE
SCHLAGE WIEGAND READER
FALCON RX MEL 24/25 OR VON DUPRIN RX QEL PANIC
LOCKNETICS LP250
EPT/DOOR LOOP/EHINGE
SCHLAGE 679-05 DPS
JUNCTION BOX

OPERATION:
DOORS NORMALLY CLOSED AND LOCKED.

ENTRY BY VALID CREDENTIAL OR KEY OVERRIDE. VALID CREDENTIAL WILL CAUSE MEL OR QEL TO RETRACT.

RX IN PANIC TO SHUNT DOOR FORCED ALARM.

FREE EGRESS AT ALL TIMES.

VERIFY PoE+ POWER SOURCE ADEQUATE FOR LOAD.

DATE DRAWN: 10-21-20 | REVISION DATE: 3-7-22

ALLEGION™

TITLE: ISONAS IP BRIDGE WITH RX QEL/RX MEL -SINGLE DOOR

DRAWING TYPE: WIRING DIAGRAM

DWG NO: 113774W

DRAWN/CHECKED BY: DOVE/TAMARCHENKO

REV B

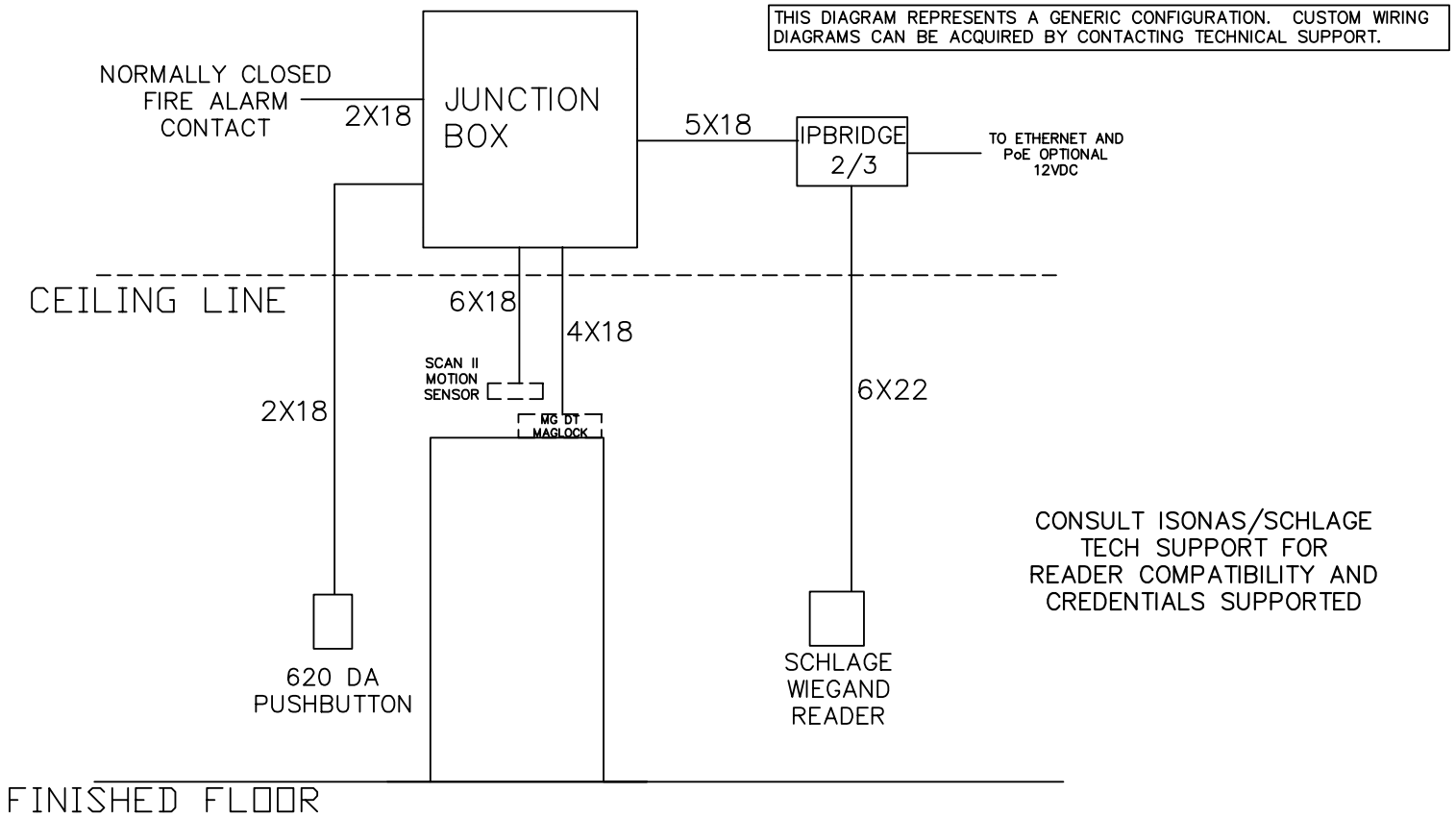

NOTES:
1) ALL LOW VOLTAGE WIRING TO BE STANDARD, MULTI-CONDUCTOR COLOR CODED WITHOUT SPLICES.

2) WIRING TO CONFORM TO APPLICABLE NATIONAL, STATE AND LOCAL ELECTRICAL CODES.

3) REFER TO SPECIFIC PRODUCT INSTALLATION INSTRUCTIONS FOR SPECIFIC WIRING REQUIREMENTS.

4) THIS DRAWING IS FOR GRAPHICAL REPRESENTATION OF PRODUCTS DETAILED IN THE HARDWARE SET ONLY.

5) * CONDUCTOR COUNT TO BE DETERMINED BY ACCESS CONTROL PANEL PROVIDER.

HARDWARE USED:
ISONAS IPBRIDGE
SCHLAGE WIEGAND READER
MAGLOCK IN RUSH SUPPRESSOR
LOCKNETICS MG DT MAG LOCK WITH INTEGRATED DPS
SCHLAGE SCANII MOTION SENSOR
LOCKNETICS 620DA PUSHBUTTON JUNCTION BOX

OPERATION:
DOORS NORMALLY CLOSED AND LOCKED.

ENTRY BY VALID CREDENTIAL OR KEY OVERRIDE. VALID CREDENTIAL WILL CAUSE MG MAGLOCK TO RELEASE.

SCAN II MOTION SENSOR OR 620DA OR TO SHUNT DOOR FORCED ALARM AND RELEASE DOOR FOR FREE EGRESS.

FIRE ALARM TO RELEASE MG MAGLOCK FOR FREE ACCESS FROM EITHER SIDE.

FREE EGRESS AT ALL TIMES.

VERIFY PoE+ POWER SOURCE ADEQUATE FOR LOAD.

DATE DRAWN: 10-21-20 | REVISION DATE: 3-7-22

ALLEGION™

TITLE: ISONAS IP BRIDGE WITH MG MAGLOCK -SINGLE DOOR

DRAWING TYPE: RISER DIAGRAM

DWG NO: 113775R

DRAWN/CHECKED BY: DOVE/TAMARCHENKO

REV B

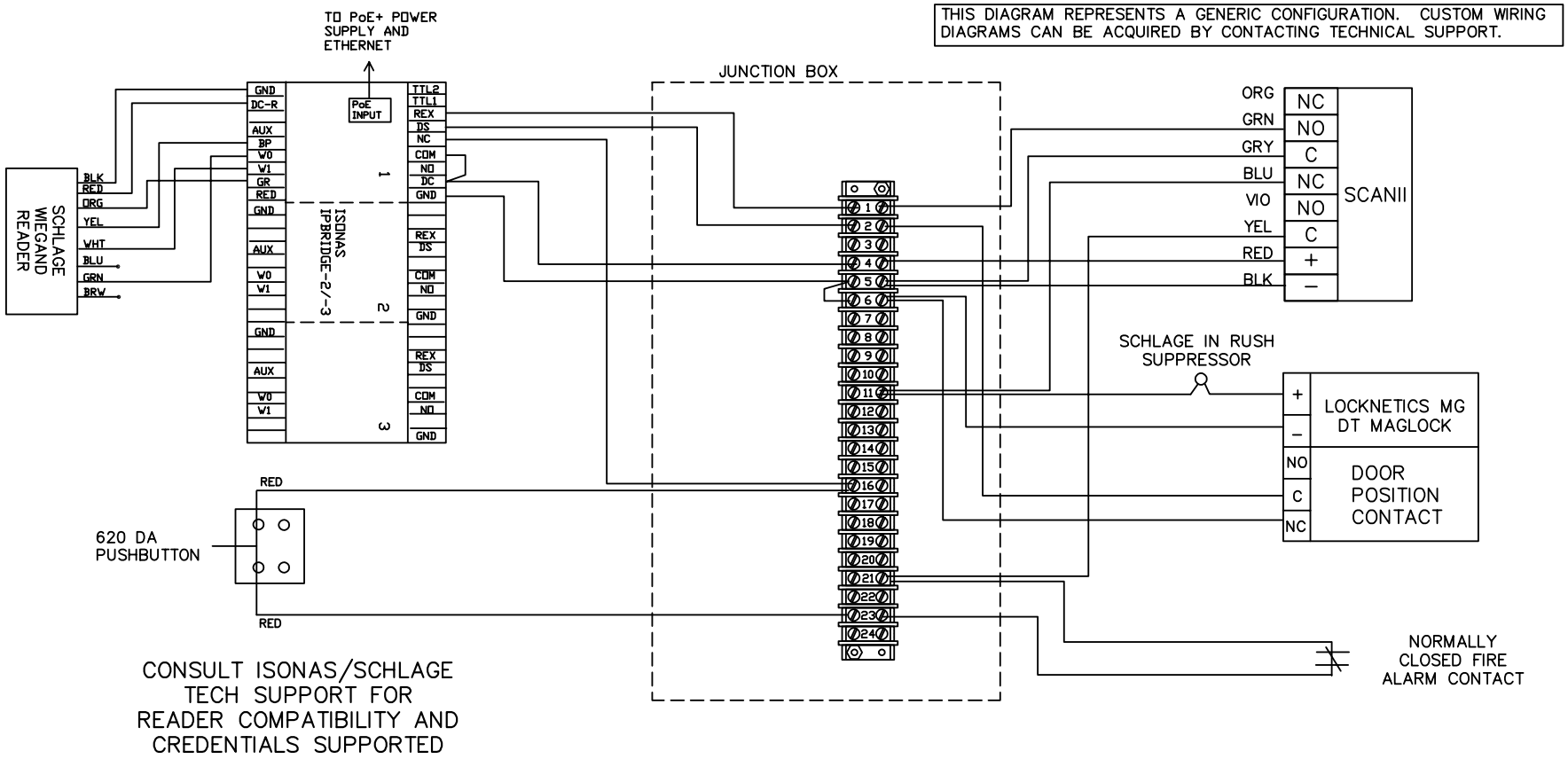

NOTES:
1) ALL LOW VOLTAGE WIRING TO BE STANDARD, MULTI-CONDUCTOR COLOR CODED WITHOUT SPLICES.

2) WIRING TO CONFORM TO APPLICABLE NATIONAL, STATE AND LOCAL ELECTRICAL CODES.

3) REFER TO SPECIFIC PRODUCT INSTALLATION INSTRUCTIONS FOR SPECIFIC WIRING REQUIREMENTS.

4) THIS DRAWING IS FOR GRAPHICAL REPRESENTATION OF PRODUCTS DETAILED IN THE HARDWARE SET ONLY.

HARDWARE USED:

ISONAS IPBRIDGE
SCHLAGE WIEGAND READER
MAGLOCK IN RUSH SUPPRESSOR
LOCKNETICS MG DT MAG LOCK WITH INTEGRATED DPS
SCHLAGE SCANII MOTION SENSOR
LOCKNETICS 620DA PUSHBUTTON
JUNCTION BOX

OPERATION:
DOORS NORMALLY CLOSED AND LOCKED.

ENTRY BY VALID CREDENTIAL OR KEY OVERRIDE. VALID CREDENTIAL WILL CAUSE MG MAGLOCK TO RELEASE.

SCAN II MOTION SENSOR OR 620DA OR TO SHUNT DOOR FORCED ALARM AND RELEASE DOOR FOR FREE EGRESS.

FIRE ALARM TO RELEASE MG MAGLOCK FOR FREE ACCESS FROM EITHER SIDE.

FREE EGRESS AT ALL TIMES.

VERIFY PoE+ POWER SOURCE ADEQUATE FOR LOAD.

DATE DRAWN: 10-21-20 | REVISION DATE: 3-7-22

ALLEGION™

TITLE: ISONAS IP BRIDGE WITH MG MAGLOCK -SINGLE DOOR

DRAWING TYPE: WIRING DIAGRAM

DWG NO: 113775W

DRAWN/CHECKED BY: DOVE/TAMARCHENKO

REV B

THIS DIAGRAM REPRESENTS A GENERIC CONFIGURATION. CUSTOM WIRING DIAGRAMS CAN BE ACQUIRED BY CONTACTING TECHNICAL SUPPORT.

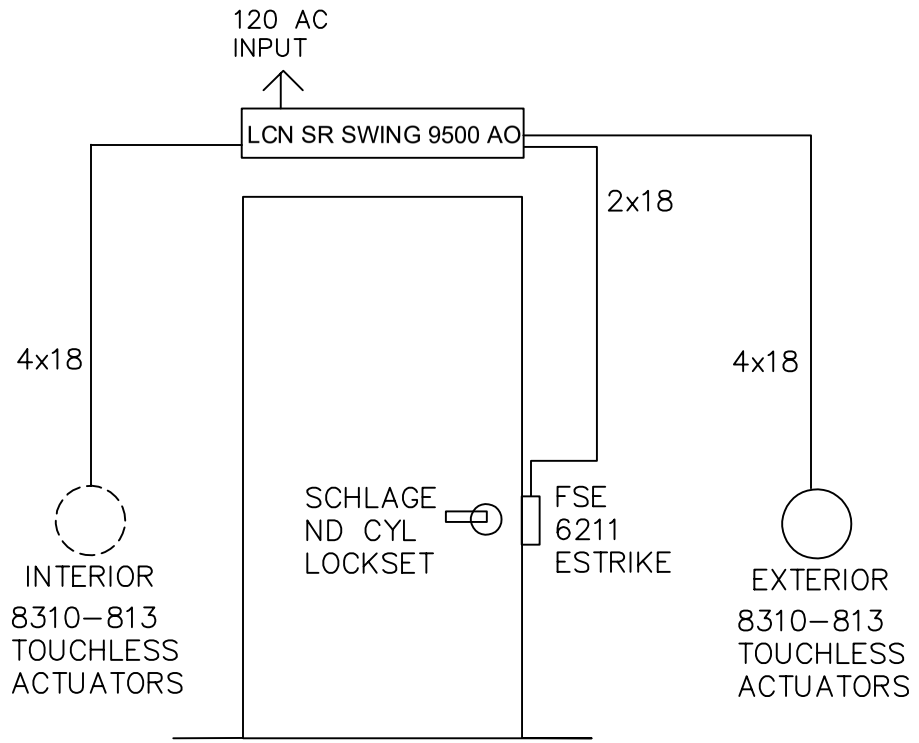

NOTES:
1) ALL LOW VOLTAGE WIRING TO BE STANDARD, MULTI-CONDUCTOR COLOR CODED WITHOUT SPLICES.

2) WIRING TO CONFORM TO APPLICABLE NATIONAL, STATE AND LOCAL ELECTRICAL CODES.

3) REFER TO SPECIFIC PRODUCT INSTALLATION INSTRUCTIONS FOR SPECIFIC WIRING REQUIREMENTS.

4) THIS DRAWING IS FOR GRAPHICAL REPRESENTATION OF PRODUCTS DETAILED IN THE HARDWARE SET ONLY.

5) * CONDUCTOR COUNT TO BE DETERMINED BY ACCESS CONTROL PANEL PROVIDER.

HARDWARE USED:
1 LCN 9500 SR SWING AO
2 LCN 8310-813 TOUCHLESS ACTUATOR
1 VD FSE 6211 ESTRIKE

TYPE
INTERIOR DOOR WITH VD ESTRIKE, LCN SR SWING AO AND TOUCHLESS ACTUATORS INTERIOR AND EXTERIOR

OPERATION:

EXTERIOR WAVING HAND IN FRONT OF 8310–813 TOUCHLESS ACTUATOR TO SIGNAL LCN SR SWING AO TO OPEN DOOR AND RELEASE 6211 ESTRIKE. MAY BE OPENED MANUALLY VIA ND CYL LOCK

INTERIOR WAVING HAND IN FRONT OF 8310–813 TOUCHLESS ACTUATOR TO SIGNAL LCN SR SWING AO TO RELEASE 6211 ESTRIKE AND OPEN DOOR. MAY BE OPENED VIA ND CYL LOCK.

IN THIS EXAMPLE ALL WIRING CONNECTIONS ARE MADE IN THE LCN SR SWING ENCLOSURE

DATE DRAWN: 04-03-20
REVISION DATE: 04-03-20

ALLEGION™

TITLE: INTERIOR DOOR WITH VD ESTRIKE, LCN SR SWING AO AND TOUCHLESS ACTUATORS INTERIOR AND EXTERIOR

DRAWING TYPE: RISER DIAGRAM

DWG NO: 113517 R

DRAWN/CHECKED BY: B DOVE/J WEISS

REV A

THIS DIAGRAM REPRESENTS A GENERIC CONFIGURATION. CUSTOM WIRING DIAGRAMS CAN BE ACQUIRED BY CONTACTING TECHNICAL SUPPORT.

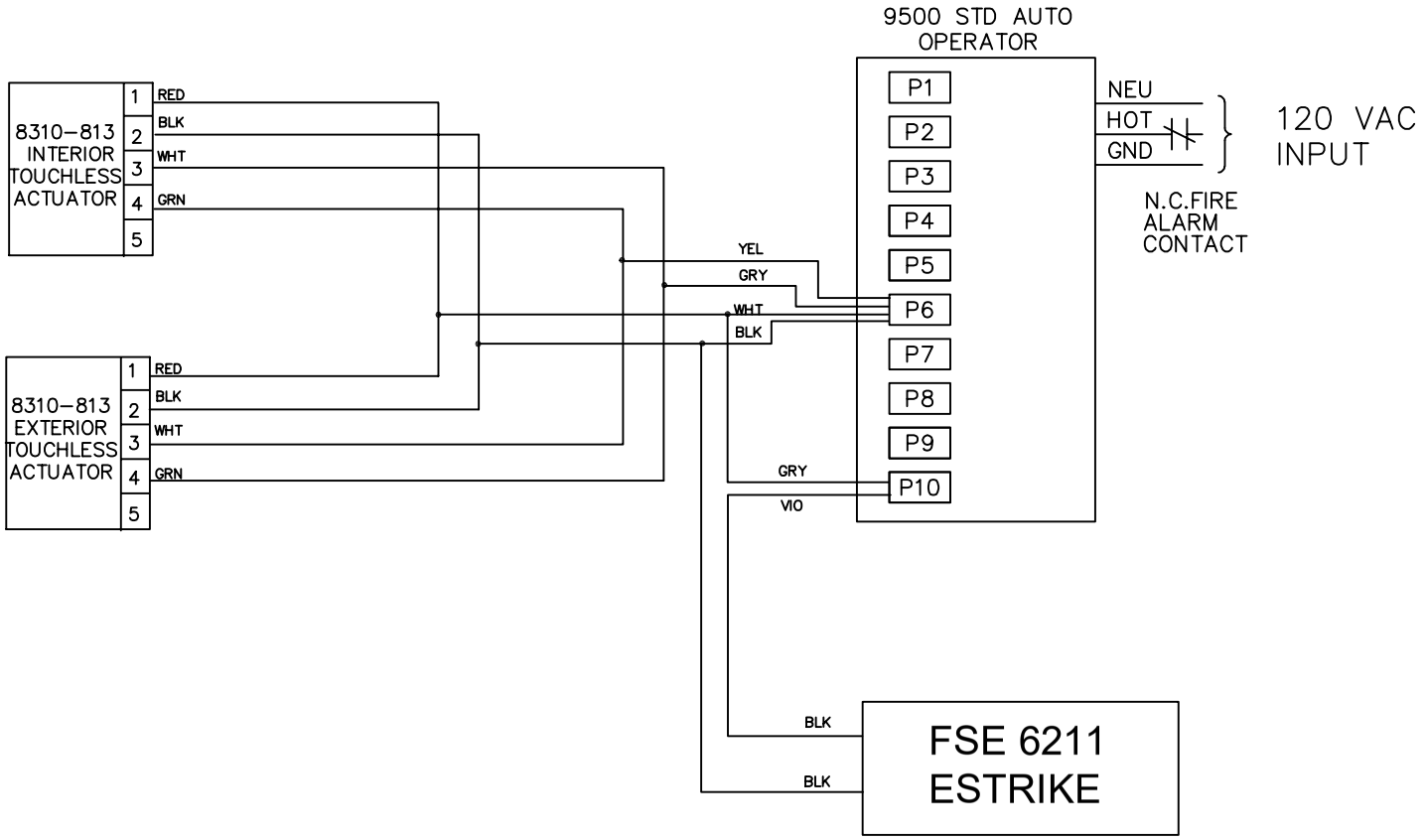

NOTES:
1) ALL LOW VOLTAGE WIRING TO BE STANDARD, MULTI-CONDUCTOR COLOR CODED WITHOUT SPLICES.

2) WIRING TO CONFORM TO APPLICABLE NATIONAL, STATE AND LOCAL ELECTRICAL CODES.

3) REFER TO SPECIFIC PRODUCT INSTALLATION INSTRUCTIONS FOR SPECIFIC WIRING REQUIREMENTS.

4) THIS DRAWING IS FOR GRAPHICAL REPRESENTATION OF PRODUCTS DETAILED IN THE HARDWARE SET ONLY.

5) ADDITIONAL WIRING WILL BE REQUIRED FROM ACP THAT IS NOT SHOWN HERE. CONSULT PROVIDER FOR DETAILS.

HARDWARE USED:
1 LCN 9500 SR SWING AO
2 LCN 8310-813 TOUCHLESS ACTUATOR
1 VD FSE 6211 ESTRIKE

TYPE
INTERIOR DOOR WITH VD ESTRIKE, LCN SR SWING AO AND TOUCHLESS ACTUATORS INTERIOR AND EXTERIOR

OPERATION:

EXTERIOR WAVING HAND IN FRONT OF 8310–813 TOUCHLESS ACTUATOR TO SIGNAL LCN SR SWING AO TO OPEN DOOR AND RELEASE 6211 ESTRIKE. MAY BE OPENED MANUALLY VIA ND CYL LOCK

INTERIOR WAVING HAND IN FRONT OF 8310–813 TOUCHLESS ACTUATOR TO SIGNAL LCN SR SWING AO TO RELEASE 6211 ESTRIKE AND OPEN DOOR. MAY BE OPENED VIA ND CYL LOCK.

IN THIS EXAMPLE ALL WIRING CONNECTIONS ARE IN THE LCN SR SWING ENCLOSURE

DATE DRAWN: 04-03-20
REVISION DATE: 04-03-20

ALLEGION™

TITLE: INTERIOR DOOR WITH VD ESTRIKE, LCN SR SWING AO AND TOUCHLESS ACTUATORS INTERIOR AND EXTERIOR

DRAWING TYPE: WIRING DIAGRAM
DWG NO: 113517 W
DRAWN BY: B DOVE/J WEISS
REV A

THIS DIAGRAM REPRESENTS A GENERIC CONFIGURATION. CUSTOM WIRING DIAGRAMS CAN BE ACQUIRED BY CONTACTING TECHNICAL SUPPORT.

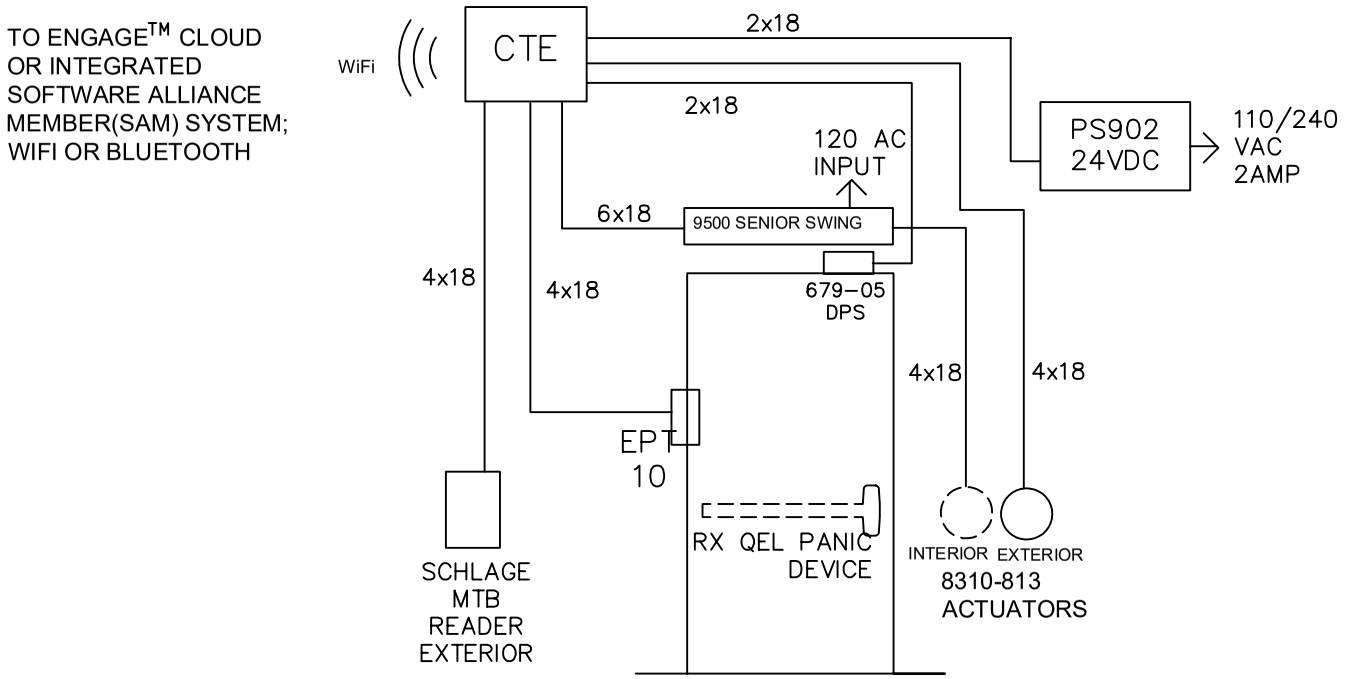

NOTES:
1) ALL LOW VOLTAGE WIRING TO BE STANDARD, MULTI-CONDUCTOR COLOR CODED WITHOUT SPLICES.

2) WIRING TO CONFORM TO APPLICABLE NATIONAL, STATE AND LOCAL ELECTRICAL CODES.

3) REFER TO SPECIFIC PRODUCT INSTALLATION INSTRUCTIONS FOR SPECIFIC WIRING REQUIREMENTS.

4) THIS DRAWING IS FOR GRAPHICAL REPRESENTATION OF PRODUCTS DETAILED IN THE HARDWARE SET ONLY.

5) * CONDUCTOR COUNT TO BE DETERMINED BY ACCESS CONTROL PANEL PROVIDER.

HARDWARE USED:
- 1 CTE x MTB SCHLAGE READER
- 1 VD QEL PANIC
- 1 EPT 10
- 1 PS902
- 1 679-05 DPS
- 1 LCN 9500 SENIOR SWING - SINGLE DOOR
- 2 8310-813 TOUCHLESS ACTUATORS

TYPE
CTE WITH QEL AND PS902 WITH 9500 SENIOR SWING AO, 8310-813 TOUCHLESS ACTUATORS

OPERATION:
SCHLAGE MTB READER TO SIGNAL EL TO RETRACT THE ELECTRIC LATCH ON VON DUPRIN RX QEL PANIC BAR AND ENABLE EXTERIOR ACTUATOR TO ALLOW ENTRY. FREE EGRESS ALWAYS PERMITTED. INTERIOR ACTUATOR ALWAYS ACTIVE.

ADDITIONAL WIRING WILL BE REQUIRED THAT IS NOT SHOWN HERE.

CTE TO COMMUNICATE TO ENGAGE™ CLOUD OR SOFTWARE ALLIANCE MEMBER(SAM)SYSTEM

THIS IS NOT A FIRE RATED APPLICATION

DATE DRAWN: 03-27-20
REVISION DATE: 04-03-20

ALLEGION™

TITLE: CTE WITH QEL AND PS902 WITH 9500 SENIOR SWING AO, 8310-813 TOUCHLESS ACTUATORS

DRAWING TYPE: RISER DIAGRAM

DWG NO: 113518 R

DRAWN BY/CHECKED BY: B DOVE/J WEISS

REV A

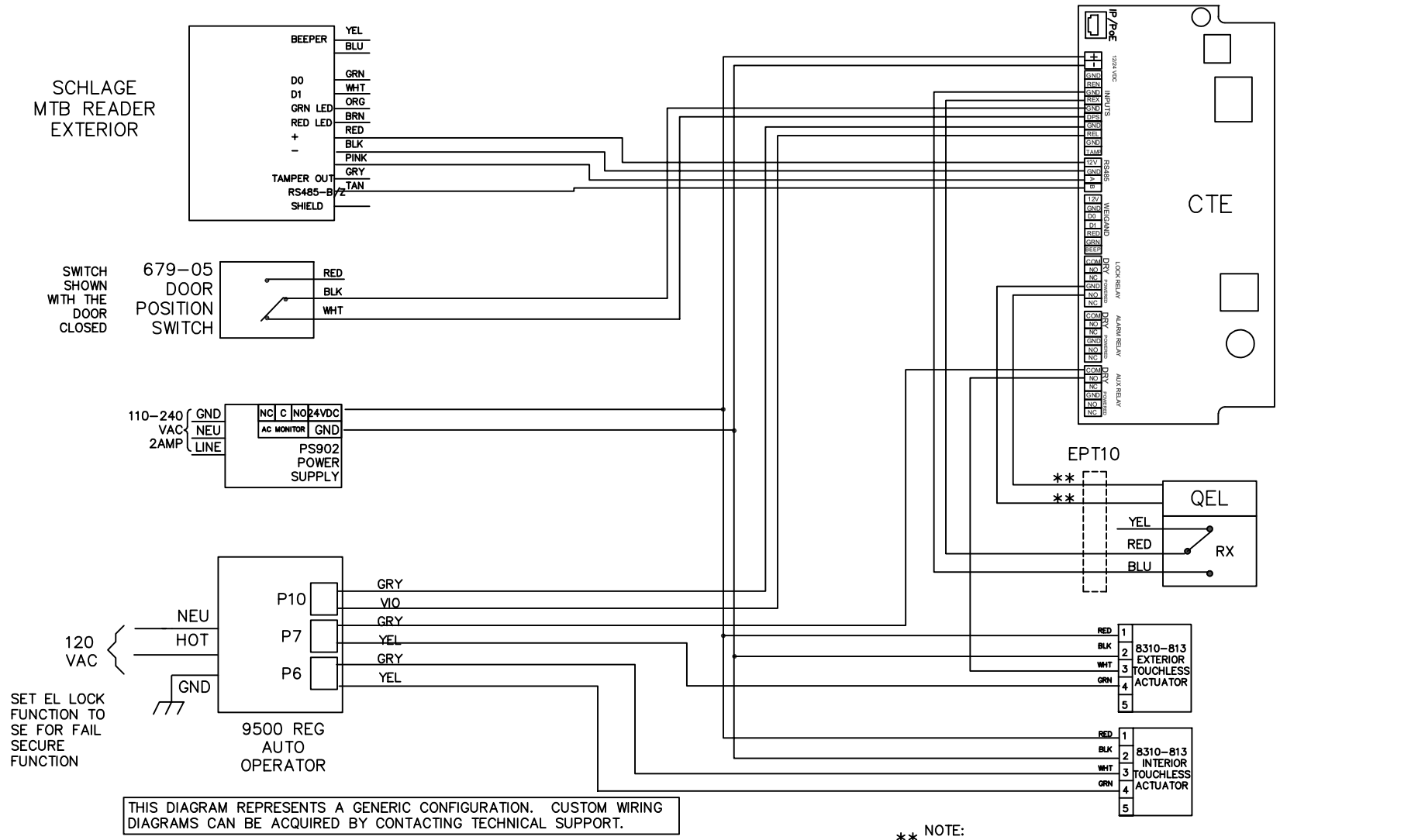

THIS DIAGRAM REPRESENTS A GENERIC CONFIGURATION. CUSTOM WIRING DIAGRAMS CAN BE ACQUIRED BY CONTACTING TECHNICAL SUPPORT.

** NOTE:
USE #18 GAUGE WIRE FOR DISTANCES UP TO 200' FROM EPT TO PS902

NOTES:
1) ALL LOW VOLTAGE WIRING TO BE STANDARD, MULTI-CONDUCTOR COLOR CODED WITHOUT SPLICES.

2) WIRING TO CONFORM TO APPLICABLE NATIONAL, STATE AND LOCAL ELECTRICAL CODES.

3) REFER TO SPECIFIC PRODUCT INSTALLATION INSTRUCTIONS FOR SPECIFIC WIRING REQUIREMENTS.

4) THIS DRAWING IS FOR GRAPHICAL REPRESENTATION OF PRODUCTS DETAILED IN THE HARDWARE SET ONLY.

5) ADDITIONAL WIRING WILL BE REQUIRED FROM ACP THAT IS NOT SHOWN HERE. CONSULT PROVIDER FOR DETAILS.

HARDWARE USED:
- 1 CTE x MTB SCHLAGE READER
- 1 VD QEL PANIC
- 1 EPT 10
- 1 PS902
- 1 679-05 DPS
- 1 LCN 9500 SENIOR SWING - SINGLE DOOR
- 2 8310-813 TOUCHLESS ACTUATORS

TYPE
CTE WITH QEL AND PS902 WITH 9500 SENIOR SWING AO, 8310-813 TOUCHLESS ACTUATORS

OPERATION:
SCHLAGE MTB READER TO SIGNAL EL TO RETRACT THE ELECTRIC LATCH ON VON DUPRIN RX QEL PANIC BAR AND ENABLE EXTERIOR ACTUATOR TO ALLOW ENTRY. FREE EGRESS ALWAYS PERMITTED. INTERIOR ACTUATOR ALWAYS ACTIVE.

ADDITIONAL WIRING WILL BE REQUIRED THAT IS NOT SHOWN HERE.

CTE TO COMMUNICATE TO ENGAGE™ CLOUD OR SOFTWARE ALLIANCE MEMBER(SAM)SYSTEM

THIS IS NOT A FIRE RATED APPLICATION

DATE DRAWN: 03-27-20
REVISION DATE: 04-03-20

ALLEGION™

TITLE: CTE WITH QEL AND PS902 WITH 9500 SENIOR SWING AO, 8310-813 TOUCHLESS ACTUATORS

DRAWING TYPE: WIRING DIAGRAM

DWG NO: 113518W

DRAWN/CHECKED BY: B DOVE /J WEISS

REV A

THIS DIAGRAM REPRESENTS A GENERIC CONFIGURATION. CUSTOM WIRING DIAGRAMS CAN BE ACQUIRED BY CONTACTING TECHNICAL SUPPORT.

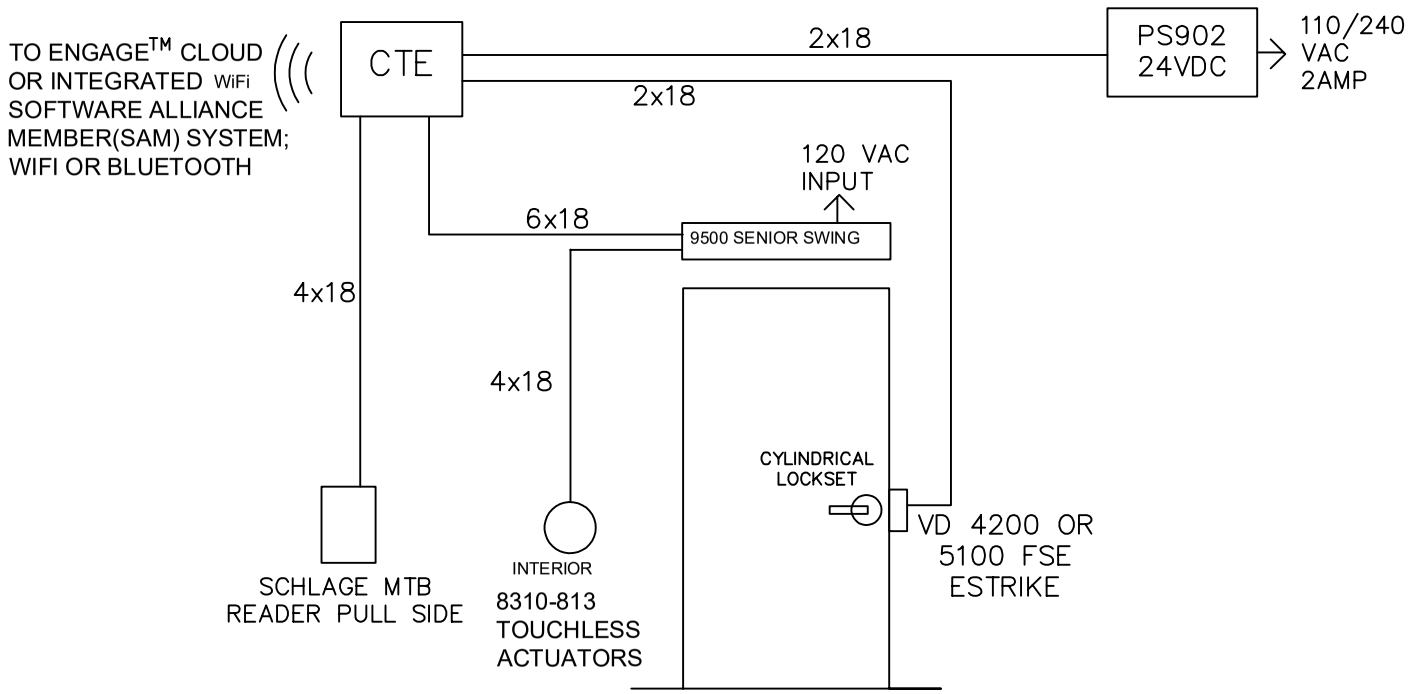

NOTES:
1) ALL LOW VOLTAGE WIRING TO BE STANDARD, MULTI-CONDUCTOR COLOR CODED WITHOUT SPLICES.

2) WIRING TO CONFORM TO APPLICABLE NATIONAL, STATE AND LOCAL ELECTRICAL CODES.

3) REFER TO SPECIFIC PRODUCT INSTALLATION INSTRUCTIONS FOR SPECIFIC WIRING REQUIREMENTS.

4) THIS DRAWING IS FOR GRAPHICAL REPRESENTATION OF PRODUCTS DETAILED IN THE HARDWARE SET ONLY.

5) * CONDUCTOR COUNT TO BE DETERMINED BY ACCESS CONTROL PANEL PROVIDER.

HARDWARE USED:
- 1 CTE
- 1 MTB SCHLAGE READER
- 1 VD 5100 OR 4200 FSE ESTRIKE
- 1 PS902
- 1 9500 SENIOR SWING - SINGLE DOOR
- 1 8310-813 TOUCHLESS ACTUATOR

TYPE
CTE ACCESS CONTROL WITH ESTRIKE WITH SENIOR SWING AO AND INTERIOR TOUCHLESS ACTUATOR

OPERATION:
SCHLAGE MTB READER TO SIGNAL ESTRIKE TO RELEASE AND SWING DOOR OPEN VIA 9500 AO. FREE EGRESS ALWAYS PERMITTED. INTERIOR ACTUATOR ALWAYS ACTIVE.

ADDITIONAL WIRING WILL BE REQUIRED THAT IS NOT SHOWN HERE.

CTE TO COMMUNICATE TO ENGAGE™ CLOUD OR SOFTWARE ALLIANCE MEMBER(SAM)SYSTEM

THIS IS NOT A FIRE RATED APPLICATION

DATE DRAWN: 03-26-20

REVISION DATE: 04-03-20

ALLEGION™

TITLE: CTE WITH ESTRIKE AND PS902 WITH 9500 SENIOR SWING AO AND INTERIOR TOUCHLESS ACTUATOR

DRAWING TYPE: RISER DIAGRAM

DWG NO: 113520R

DRAWN/CHECKED BY: B DOVE/J WEISS

REV A

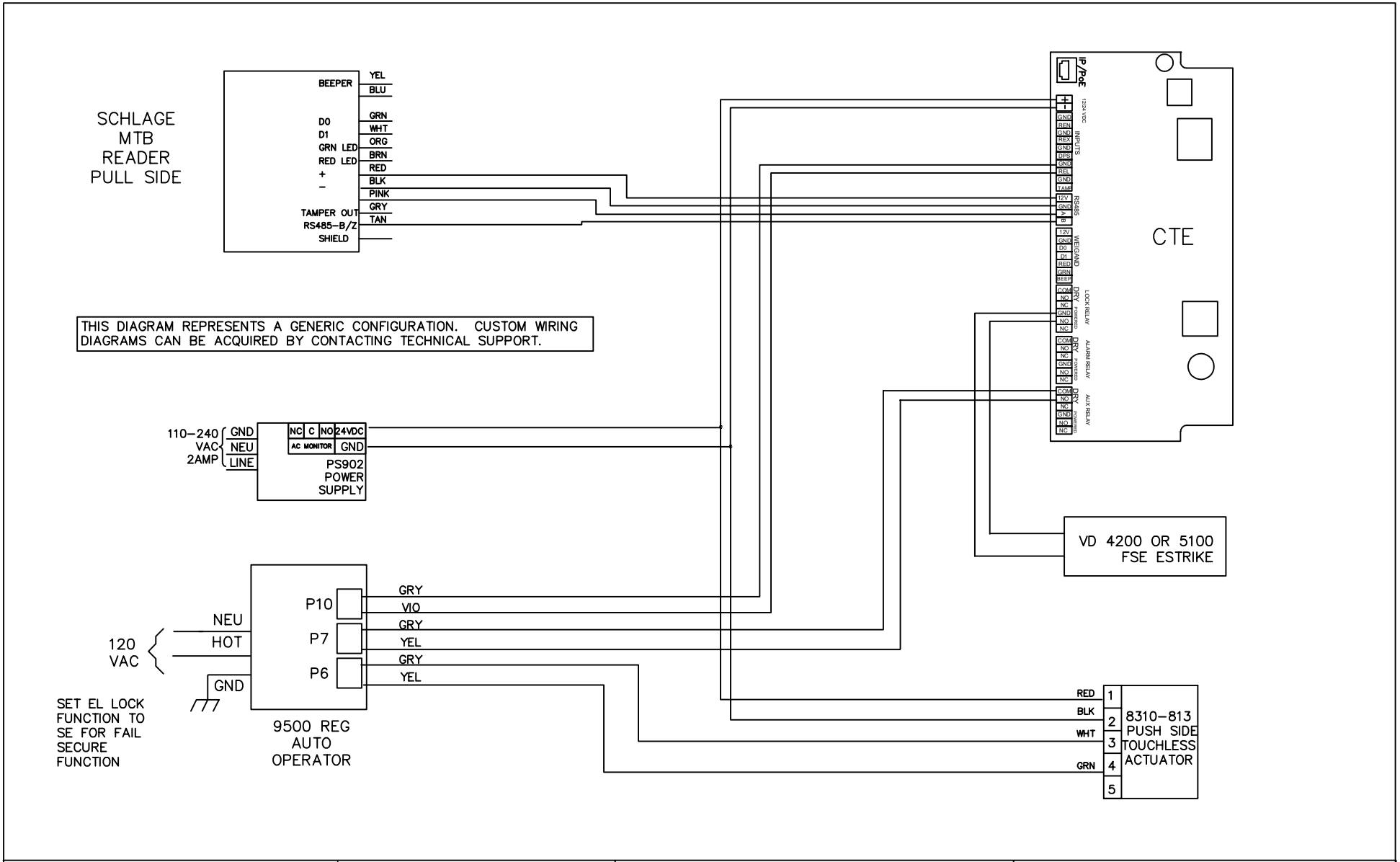

NOTES:
1) ALL LOW VOLTAGE WIRING TO BE STANDARD, MULTI-CONDUCTOR COLOR CODED WITHOUT SPLICES.

2) WIRING TO CONFORM TO APPLICABLE NATIONAL, STATE AND LOCAL ELECTRICAL CODES.

3) REFER TO SPECIFIC PRODUCT INSTALLATION INSTRUCTIONS FOR SPECIFIC WIRING REQUIREMENTS.

4) THIS DRAWING IS FOR GRAPHICAL REPRESENTATION OF PRODUCTS DETAILED IN THE HARDWARE SET ONLY.

5) ADDITIONAL WIRING WILL BE REQUIRED FROM ACP THAT IS NOT SHOWN HERE. CONSULT PROVIDER FOR DETAILS.

HARDWARE USED:
- 1 CTE
- 1 MTB SCHLAGE READER
- 1 VD 4200 OR 5100 FSE ESTRIKE
- 1 PS902
- 1 LCN 9500 SENIOR SWING - SINGLE DOOR
- 1 LCN 8310-813 TOUCHLESS ACTUATOR

TYPE
CTE ACCESS CONTROL WITH ESTRIKE WITH SENIOR SWING AO AND INTERIOR TOUCHLESS ACTUATOR

OPERATION:
SCHLAGE MTB READER TO SIGNAL ESTRIKE TO RELEASE AND SWING DOOR OPEN VIA 9500 AO. FREE EGRESS ALWAYS PERMITTED. INTERIOR ACTUATOR ALWAYS ACTIVE.

ADDITIONAL WIRING WILL BE REQUIRED THAT IS NOT SHOWN HERE.

CTE TO COMMUNICATE TO ENGAGE™ CLOUD OR SOFTWARE ALLIANCE MEMBER(SAM)SYSTEM

THIS IS NOT A FIRE RATED APPLICATION

DATE DRAWN: 03-26-20

REVISION DATE: 04-03-20

ALLEGION™

TITLE: CTE WITH ESTRIKE AND PS902 WITH 9500 SENIOR SWING AO AND INTERIOR TOUCHLESS ACTUATOR

DRAWING TYPE: WIRING DIAGRAM

DWG NO: 113520W

DRAWN/CHECKED BY: B DOVE /J WEISS

REV A

THIS DIAGRAM REPRESENTS A GENERIC CONFIGURATION. CUSTOM WIRING DIAGRAMS CAN BE ACQUIRED BY CONTACTING TECHNICAL SUPPORT.

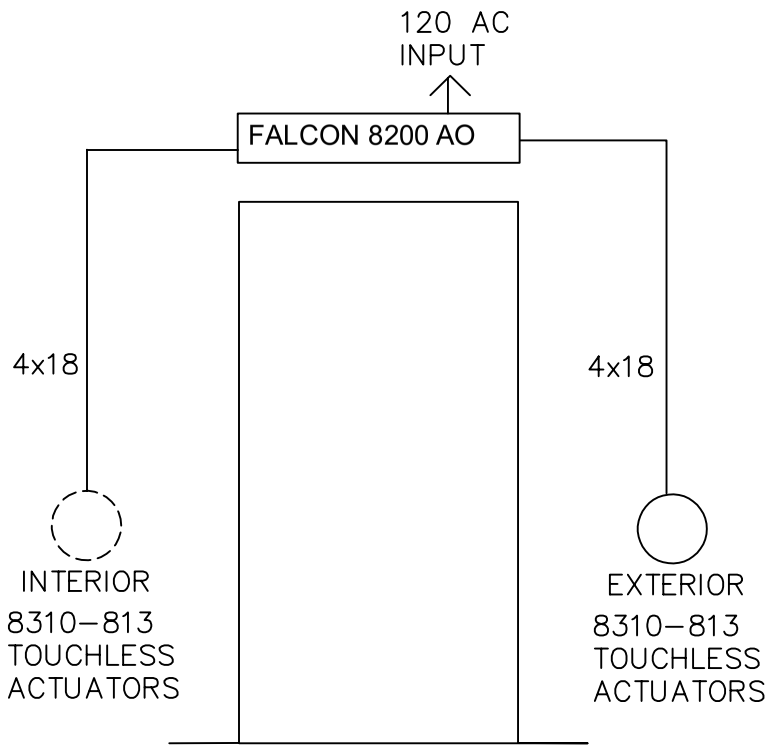

NOTES:
1) ALL LOW VOLTAGE WIRING TO BE STANDARD, MULTI-CONDUCTOR COLOR CODED WITHOUT SPLICES.

2) WIRING TO CONFORM TO APPLICABLE NATIONAL, STATE AND LOCAL ELECTRICAL CODES.

3) REFER TO SPECIFIC PRODUCT INSTALLATION INSTRUCTIONS FOR SPECIFIC WIRING REQUIREMENTS.

4) THIS DRAWING IS FOR GRAPHICAL REPRESENTATION OF PRODUCTS DETAILED IN THE HARDWARE SET ONLY.

5) * CONDUCTOR COUNT TO BE DETERMINED BY ACCESS CONTROL PANEL PROVIDER.

HARDWARE USED:

1 FALCON 8200 AO
2 8310-813 TOUCHLESS ACTUATOR

TYPE
NON LATCHING BATHROOM DOOR WITH TOUCHLESS ACTUATORS INTERIOR AND EXTERIOR

OPERATION:
SINGLE BATHROOM DOOR ENTRANCE, NON FIRE RATED, NO POSITIVE LATCHING.

EXTERIOR WAVING HAND IN FRONT OF 8310–813 TOUCHLESS ACTUATOR TO SIGNAL FALCON 8200 AO TO OPEN OR DOOR MAY BE PULLED OPEN MANUALLY VIA PULL ON DOOR

INTERIOR WAVING HAND IN FRONT OF 8310–813 TOUCHLESS ACTUATOR TO SIGNAL FALCON 8200 AO TO OPEN OR DOOR MAY BE PUSHED OPEN FROM INSIDE.

DATE DRAWN: 03-27-20
REVISION DATE: 04-03-20

ALLEGION™

TITLE: NON LATCHING BATHROOM DOOR WITH TOUCHLESS ACTUATORS INTERIOR AND EXTERIOR

DRAWING TYPE: RISER DIAGRAM

DWG NO: 113521R

DRAWN/CHECKED BY: B DOVE/J WEISS

REV A

THIS DIAGRAM REPRESENTS A GENERIC CONFIGURATION. CUSTOM WIRING DIAGRAMS CAN BE ACQUIRED BY CONTACTING TECHNICAL SUPPORT.

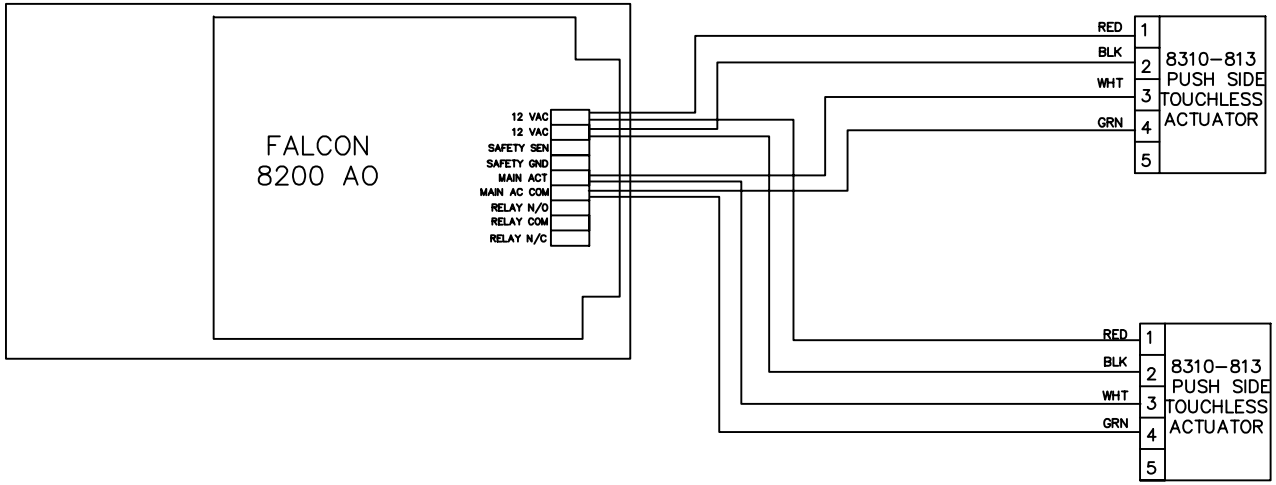

NOTES:
1) ALL LOW VOLTAGE WIRING TO BE STANDARD, MULTI-CONDUCTOR COLOR CODED WITHOUT SPLICES.

2) WIRING TO CONFORM TO APPLICABLE NATIONAL, STATE AND LOCAL ELECTRICAL CODES.

3) REFER TO SPECIFIC PRODUCT INSTALLATION INSTRUCTIONS FOR SPECIFIC WIRING REQUIREMENTS.

4) THIS DRAWING IS FOR GRAPHICAL REPRESENTATION OF PRODUCTS DETAILED IN THE HARDWARE SET ONLY.

5) ADDITIONAL WIRING WILL BE REQUIRED FROM ACP THAT IS NOT SHOWN HERE. CONSULT PROVIDER FOR DETAILS.

HARDWARE USED:

1 FALCON 8200 AO
2 8310-813 TOUCHLESS ACTUATOR

TYPE
NON LATCHING BATHROOM DOOR WITH TOUCHLESS ACTUATORS INTERIOR AND EXTERIOR

OPERATION:
SINGLE BATHROOM DOOR ENTRANCE, NON FIRE RATED, NO POSITIVE LATCHING.

EXTERIOR WAVING HAND IN FRONT OF 8310-813 TOUCHLESS ACTUATOR TO SIGNAL FALCON 8200 AO TO OPEN OR DOOR MAY BE PULLED OPEN MANUALLY VIA PULL ON DOOR

INTERIOR WAVING HAND IN FRONT OF 8310-813 TOUCHLESS ACTUATOR TO SIGNAL FALCON 8200 AO TO OPEN OR DOOR MAY BE PUSHED OPEN FROM INSIDE.

DATE DRAWN: 03-27-20

REVISION DATE: 04-03-20

ALLEGION™

TITLE: NON LATCHING BATHROOM DOOR WITH TOUCHLESS ACTUATORS INTERIOR AND EXTERIOR

DRAWING TYPE: WIRING DIAGRAM

DWG NO: 113521W

DRAWN/CHECKED BY: B DOVE/J WEISS

REV A

THIS DIAGRAM REPRESENTS A GENERIC CONFIGURATION. CUSTOM WIRING DIAGRAMS CAN BE ACQUIRED BY CONTACTING TECHNICAL SUPPORT.

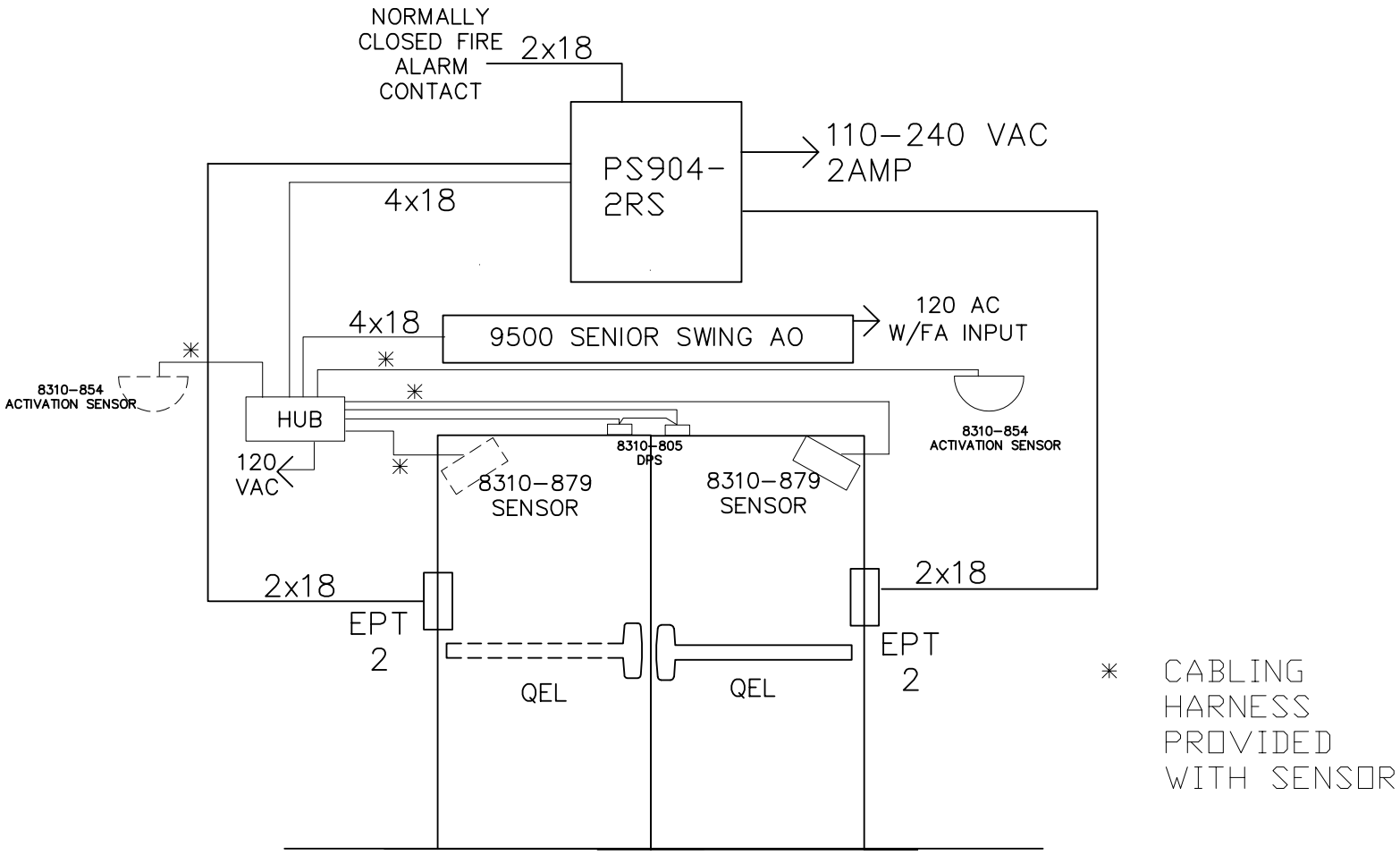

NOTES:
1) ALL LOW VOLTAGE WIRING TO BE STANDARD, MULTI-CONDUCTOR COLOR CODED WITHOUT SPLICES.

2) WIRING TO CONFORM TO APPLICABLE NATIONAL, STATE AND LOCAL ELECTRICAL CODES.

3) REFER TO SPECIFIC PRODUCT INSTALLATION INSTRUCTIONS FOR SPECIFIC WIRING REQUIREMENTS.

4) THIS DRAWING IS FOR GRAPHICAL REPRESENTATION OF PRODUCTS DETAILED IN THE HARDWARE SET ONLY.

5) ADDITIONAL WIRING WILL BE REQUIRED FROM ACP THAT IS NOT SHOWN HERE. CONSULT PROVIDER FOR DETAILS.

HARDWARE USED:
2 VD QEL PANIC DEVICE
1 PS904-2RS POWER SUPPLY
2 EPT POWER TRANSFER
1 9500 SENIOR SWING AUTO OPERATOR PAIR
2 PAIR 8310-879 SAFETY SENSORS WITH 1 CONTROLLER
2 8310-805 DPS
2 8310-854 ACTIVATION SENSORS

TYPE
PAIR QEL PANICS WITH AO AND SENSORS

OPERATION:
FIRE ALARM TO HOLD QEL LATCHES RETRACTED.

8310-854 ACTIVATION SENSORS TO SWING DOORS OPEN.

8310-879 SAFETY SENSORS TO KEEP DOORS FROM SWINGING INTO ONCOMING TRAFFIC

THIS CONFIGURATION REPRESENTS A FIRE RATED OPENING.

IN THIS EXAMPLE ALL WIRING CONNECTIONS ARE MADE IN THE PS9104 ENCLOSURE OR AT HUB.

DATE DRAWN: 03-31-20
REVISION DATE: 03-31-20

ALLEGION™

TITLE: DOUBLE EGRESS FIRE RATED PAIR, QEL, 9500 AO WITH SENSORS

DRAWING TYPE: RISER DIAGRAM

DWG NO: 113522

DRAWN BY: B DOVE/J WEISS

REV A

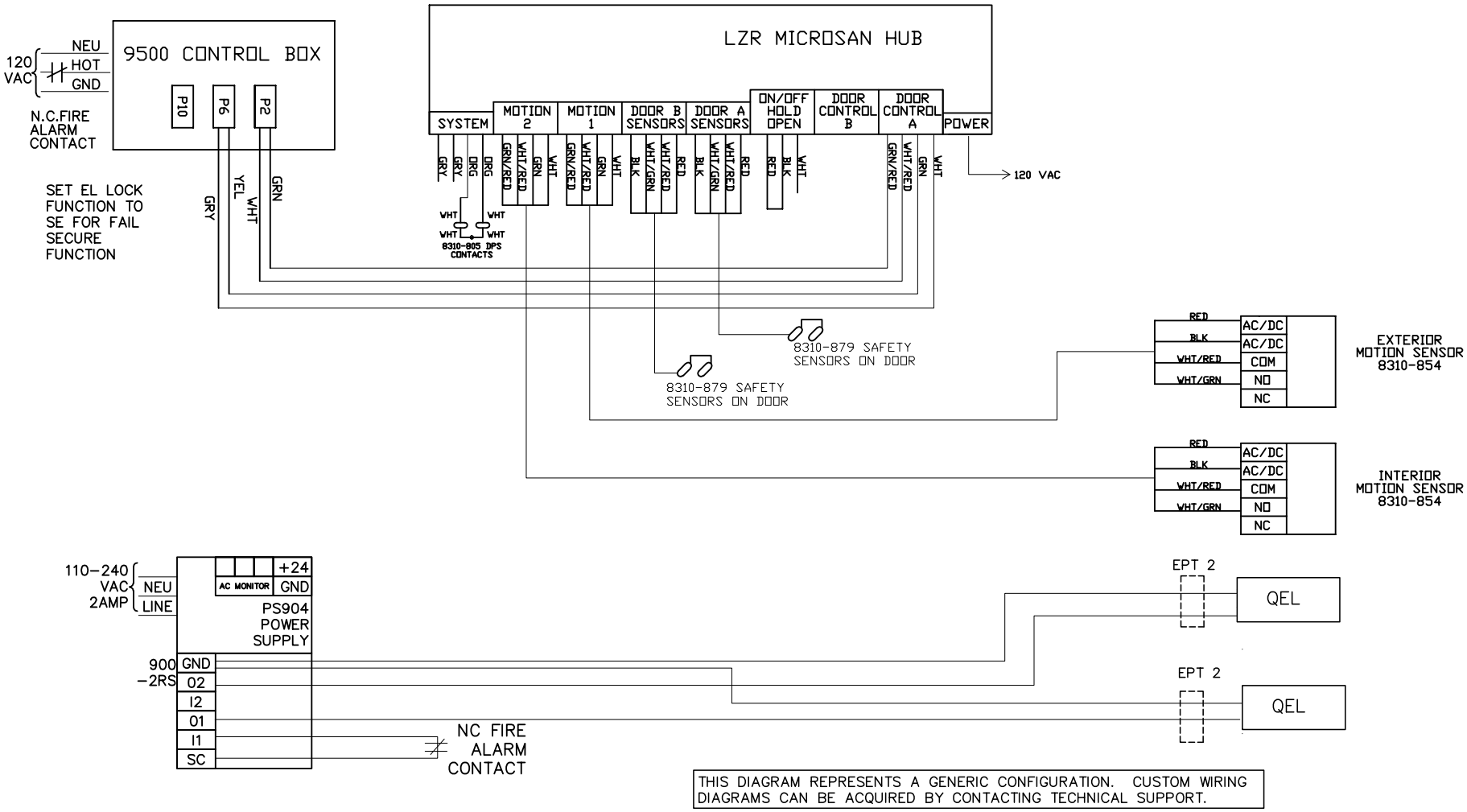

THIS DIAGRAM REPRESENTS A GENERIC CONFIGURATION. CUSTOM WIRING DIAGRAMS CAN BE ACQUIRED BY CONTACTING TECHNICAL SUPPORT.

NOTES:
1) ALL LOW VOLTAGE WIRING TO BE STANDARD, MULTI-CONDUCTOR COLOR CODED WITHOUT SPLICES.

2) WIRING TO CONFORM TO APPLICABLE NATIONAL, STATE AND LOCAL ELECTRICAL CODES.

3) REFER TO SPECIFIC PRODUCT INSTALLATION INSTRUCTIONS FOR SPECIFIC WIRING REQUIREMENTS.

4) THIS DRAWING IS FOR GRAPHICAL REPRESENTATION OF PRODUCTS DETAILED IN THE HARDWARE SET ONLY.

5) ADDITIONAL WIRING WILL BE REQUIRED FROM ACP THAT IS NOT SHOWN HERE. CONSULT PROVIDER FOR DETAILS.

HARDWARE USED:
2 VD QEL PANIC DEVICE

1 PS904-2RS POWER SUPPLY

2 EPT POWER TRANSFER

1 9500 SENIOR SWING AUTO OPERATOR PAIR

2 PAIR 8310-879 SAFETY SENSORS WITH 1 CONTROLLER

2 8310-805 DPS

2 8310-854 ACTIVATION SENSORS

TYPE
PAIR QEL PANICS WITH AO AND SENSORS

OPERATION:
FIRE ALARM TO HOLD QEL LATCHES RETRACTED.

8310-854 ACTIVATION SENSORS TO SWING DOORS OPEN.

8310-879 SAFETY SENSORS TO KEEP DOORS FROM SWINGING INTO ONCOMING TRAFFIC

THIS CONFIGURATION REPRESENTS A FIRE RATED OPENING.

IN THIS EXAMPLE ALL WIRING CONNECTIONS ARE MADE IN THE PS9104 ENCLOSURE OR AT HUB.

DATE DRAWN: 03-31-20
REVISION DATE: 03-31-20

ALLEGION™

TITLE:
DOUBLE EGRESS FIRE RATED PAIR, QEL, 9500 AO WITH SENSORS

DRAWING TYPE:
WIRING DIAGRAM

DWG NO: 113522W

DRAWN/CHECKED BY:
B DOVE/J WEISS

REV
A

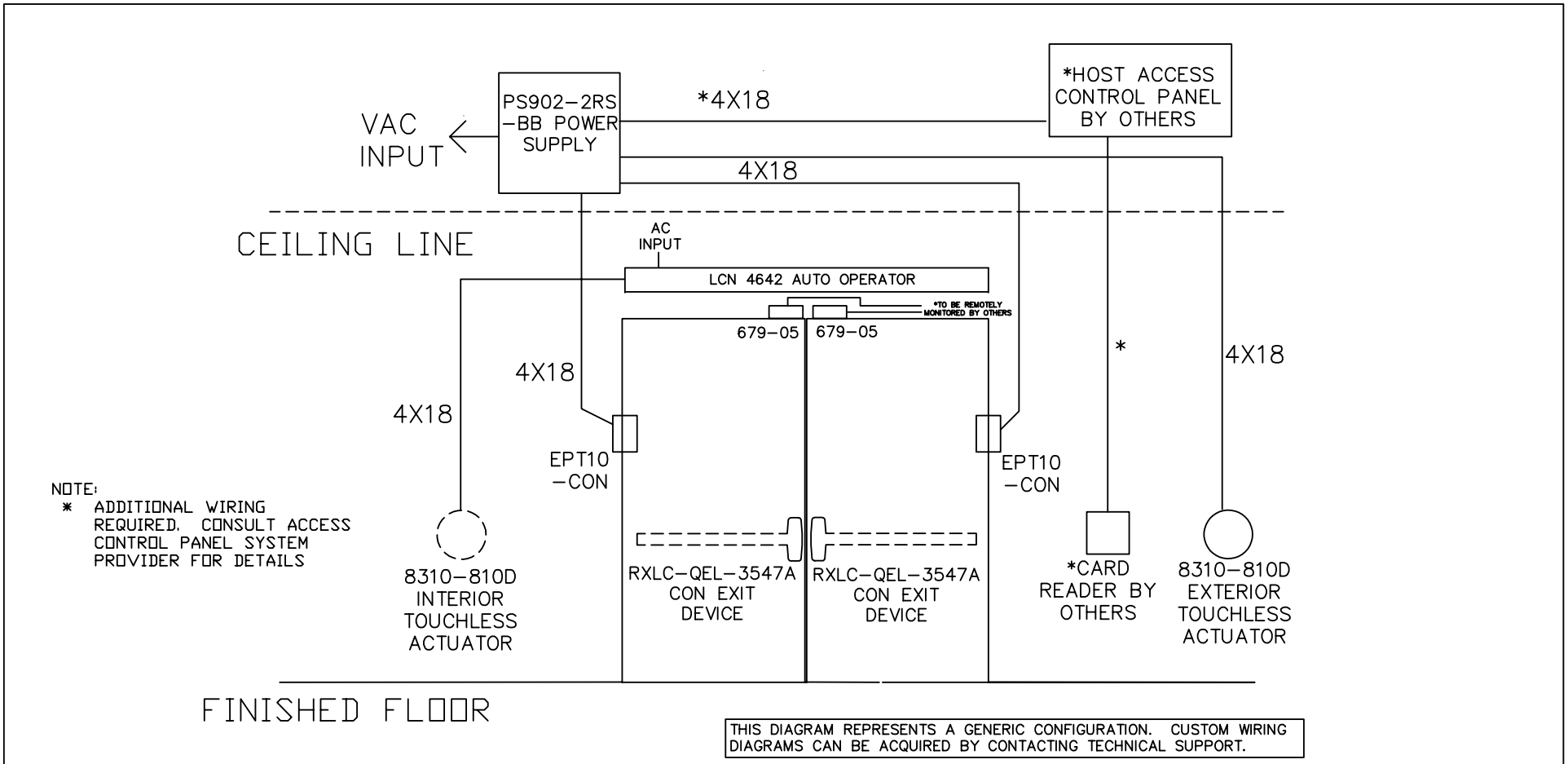

THIS DIAGRAM REPRESENTS A GENERIC CONFIGURATION. CUSTOM WIRING DIAGRAMS CAN BE ACQUIRED BY CONTACTING TECHNICAL SUPPORT.

NOTES:
1) ALL LOW VOLTAGE WIRING TO BE STANDARD, MULTI-CONDUCTOR COLOR CODED WITHOUT SPLICES.

2) WIRING TO CONFORM TO APPLICABLE NATIONAL, STATE AND LOCAL ELECTRICAL CODES.

3) REFER TO SPECIFIC PRODUCT INSTALLATION INSTRUCTIONS FOR SPECIFIC WIRING REQUIREMENTS.

4) THIS DRAWING IS FOR GRAPHICAL REPRESENTATION OF PRODUCTS DETAILED IN THE HARDWARE SET ONLY.

5) * CONDUCTOR COUNT TO BE DETERMINED BY ACCESS CONTROL PANEL PROVIDER.

HARDWARE USED:

2 RXLC QEL 3547A CON EXIT DEVICES

2 EPT10 CON

1 LCN 4642 AUTO OPERATOR

2 LCN 8310-810D TOUCHLESS ACTUATORS

1 SCHLAGE PS902-2RS-BB POWER SUPPLY

2 679-05 DOOR POSITION SWITCHES

1 CARD READER BY OTHERS TO ACCESS CONTROL SYSTEM BY OTHERS

OPERATION:
DOORS NORMALLY CLOSED AND LOCKED

ENTRY BY VALID CREDENTIAL OR KEY OVERRIDE. CREDENTIAL SIGNALS QEL LATCH RETRACTION ON BOTH EXIT DEVICES AND ENABLES EXTERIOR ACTUATOR. INTERIOR ACTUATOR ALWAYS ACTIVE TO RETRACT LATCHES AND OPEN DOOR.

RXLC AND 679 DPS SWITCHES TO BE REMOTELY MONITORED BY ACCESS CONTROL SYSTEM BY OTHERS.

THERE IS ADDITIONAL WIRING FOR THE ACCESS CONTROL SYSTEM, 679-05 DPS AND RX-LC SWITCHES THAT IS NOT SHOWN HERE.

FREE EGRESS AT ALL TIMES

DATE DRAWN: 10-13-20

REVISION DATE: 10-13-20

ALLEGION™

TITLE:
EXTERIOR SECURED PAIR OF DOORS WITH AUTO OPERATOR

DRAWING TYPE: RISER DIAGRAM

DWG NO: 113714

DRAWN/CHECKED BY: B DOVE

REV A

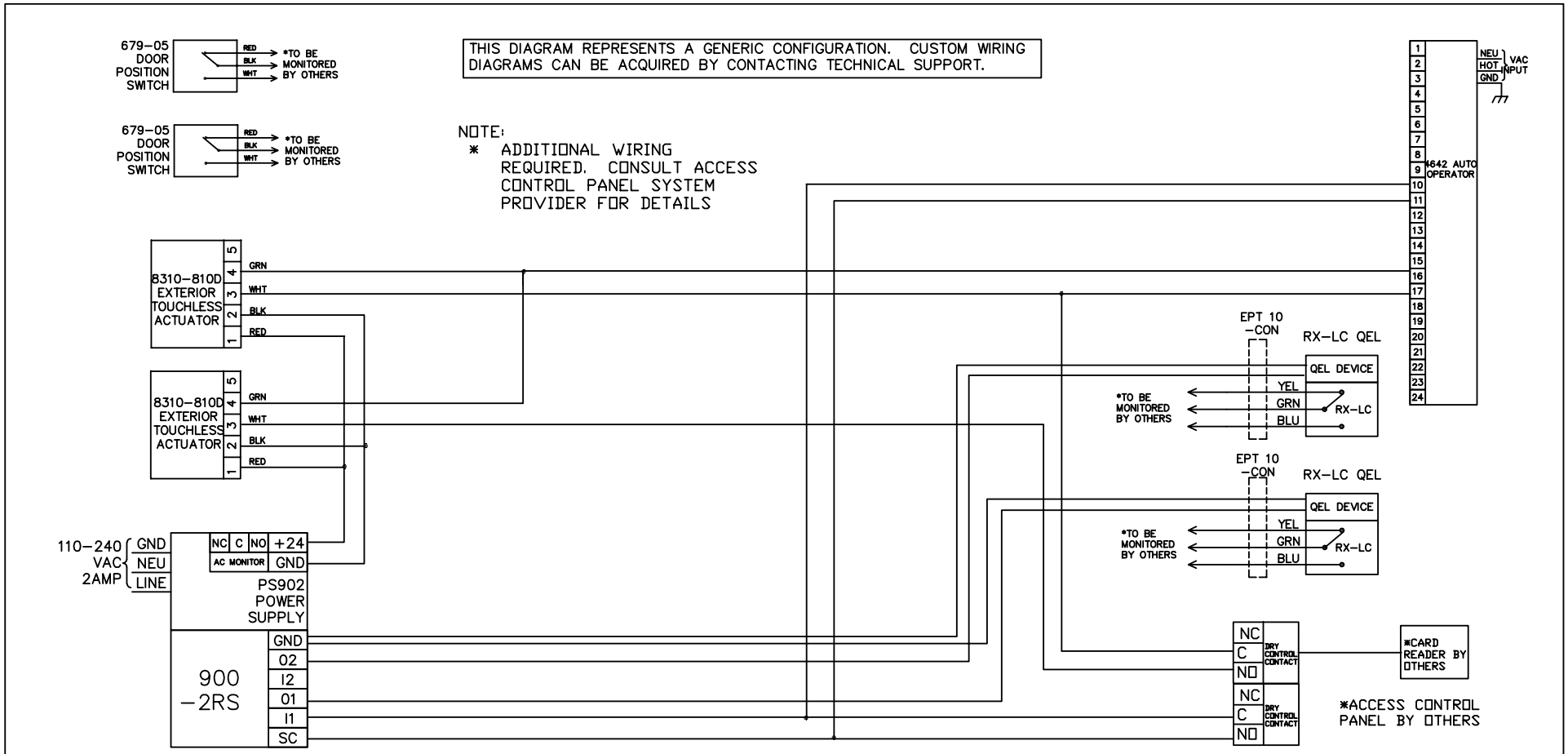

NOTES:
1) ALL LOW VOLTAGE WIRING TO BE STANDARD, MULTI-CONDUCTOR COLOR CODED WITHOUT SPLICES.

2) WIRING TO CONFORM TO APPLICABLE NATIONAL, STATE AND LOCAL ELECTRICAL CODES.

3) REFER TO SPECIFIC PRODUCT INSTALLATION INSTRUCTIONS FOR SPECIFIC WIRING REQUIREMENTS.

4) THIS DRAWING IS FOR GRAPHICAL REPRESENTATION OF PRODUCTS DETAILED IN THE HARDWARE SET ONLY.

5) * CONDUCTOR COUNT TO BE DETERMINED BY ACCESS CONTROL PANEL PROVIDER.

HARDWARE USED:

2 RXLC QEL 3547A CON EXIT DEVICES

2 EPT10 CON

1 LCN 4642 AUTO OPERATOR

2 LCN 8310-810D TOUCHLESS ACTUATORS

1 SCHLAGE PS902-2RS-BB POWER SUPPLY

2 679-05 DOOR POSITION SWITCHES

1 CARD READER BY OTHERS TO ACCESS CONTROL SYSTEM BY OTHERS

OPERATION:
DOORS NORMALLY CLOSED AND LOCKED

ENTRY BY VALID CREDENTIAL OR KEY OVERRIDE. CREDENTIAL SIGNALS QEL LATCH RETRACTION ON BOTH EXIT DEVICES AND ENABLES EXTERIOR ACTUATOR. INTERIOR ACTUATOR ALWAYS ACTIVE TO RETRACT LATCHES AND OPEN DOOR.

RXLC AND 679 DPS SWITCHES TO BE REMOTELY MONITORED BY ACCESS CONTROL SYSTEM BY OTHERS.

THERE IS ADDITIONAL WIRING FOR THE ACCESS CONTROL SYSTEM, 679-05 DPS AND RX-LC SWITCHES THAT IS NOT SHOWN HERE.

FREE EGRESS AT ALL TIMES

DATE DRAWN: 10-13-20

REVISION DATE: 10-13-20

ALLEGION™

TITLE:
EXTERIOR SECURED PAIR OF DOORS WITH AUTO OPERATOR

DRAWING TYPE: WIRING DIAGRAM

DWG NO: 113714W

DRAWN/CHECKED BY: B DOVE

REV A

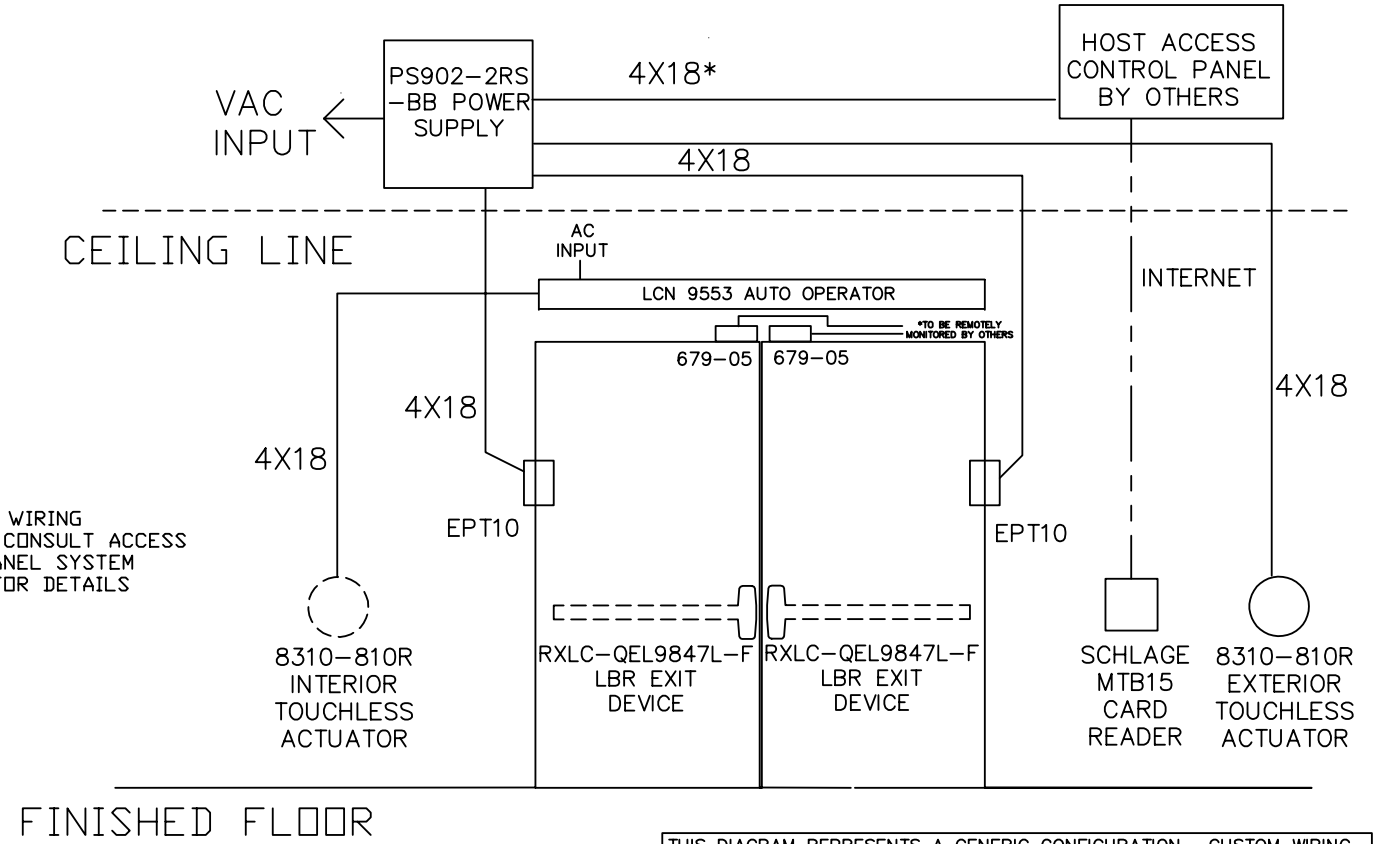

NOTE:
* ADDITIONAL WIRING REQUIRED. CONSULT ACCESS CONTROL PANEL SYSTEM PROVIDER FOR DETAILS

THIS DIAGRAM REPRESENTS A GENERIC CONFIGURATION. CUSTOM WIRING DIAGRAMS CAN BE ACQUIRED BY CONTACTING TECHNICAL SUPPORT.

NOTES:
1) ALL LOW VOLTAGE WIRING TO BE STANDARD, MULTI-CONDUCTOR COLOR CODED WITHOUT SPLICES.

2) WIRING TO CONFORM TO APPLICABLE NATIONAL, STATE AND LOCAL ELECTRICAL CODES.

3) REFER TO SPECIFIC PRODUCT INSTALLATION INSTRUCTIONS FOR SPECIFIC WIRING REQUIREMENTS.

4) THIS DRAWING IS FOR GRAPHICAL REPRESENTATION OF PRODUCTS DETAILED IN THE HARDWARE SET ONLY.

5) * CONDUCTOR COUNT TO BE DETERMINED BY ACCESS CONTROL PANEL PROVIDER.

HARDWARE USED:

2 RXLC QEL 9847L-F LBR FIRE RATED EXIT DEVICES

2 EPT10

1 LCN 9553 AUTO OPERATOR

2 LCN 8310-810R TOUCHLESS ACTUATORS

1 SCHLAGE PS902-2RS-BB POWER SUPPLY

2 679-05 DOOR POSITION SWITCHES

1 MTB15 READER TO ACCESS CONTROL SYSTEM BY OTHERS

OPERATION:
DOORS NORMALLY CLOSED AND LOCKED

ENTRY BY VALID CREDENTIAL OR KEY OVERRIDE. CREDENTIAL SIGNALS QEL LATCH RETRACTION ON BOTH FIRE RATED EXIT DEVICE AND ENABLES EXTERIOR ACTUATOR. INTERIOR ACTUATOR ALWAYS ACTIVE TO RETRACT LATCHES AND OPEN DOOR.

RXLC AND 679 DPS SWITCHES TO BE REMOTELY MONITORED BY ACCESS CONTROL SYSTEM BY OTHERS, CONNECTIONS AND WIRING NOT SHOWN HERE.

CONFIRM PoE SOURCE SUFFICIENT FOR LOAD

FREE EGRESS AT ALL TIMES

DATE DRAWN: 10-13-20

REVISION DATE: 10-13-20

ALLEGION™

TITLE:
INTERIOR CROSS-CORRIDOR, LATCHING, FIRE RATED PAIR OF DOORS WITH AUTO OPERATOR

DRAWING TYPE: RISER DIAGRAM

DWG NO: 113715R

DRAWN/CHECKED BY: B DOVE

REV A

THIS DIAGRAM REPRESENTS A GENERIC CONFIGURATION. CUSTOM WIRING DIAGRAMS CAN BE ACQUIRED BY CONTACTING TECHNICAL SUPPORT.

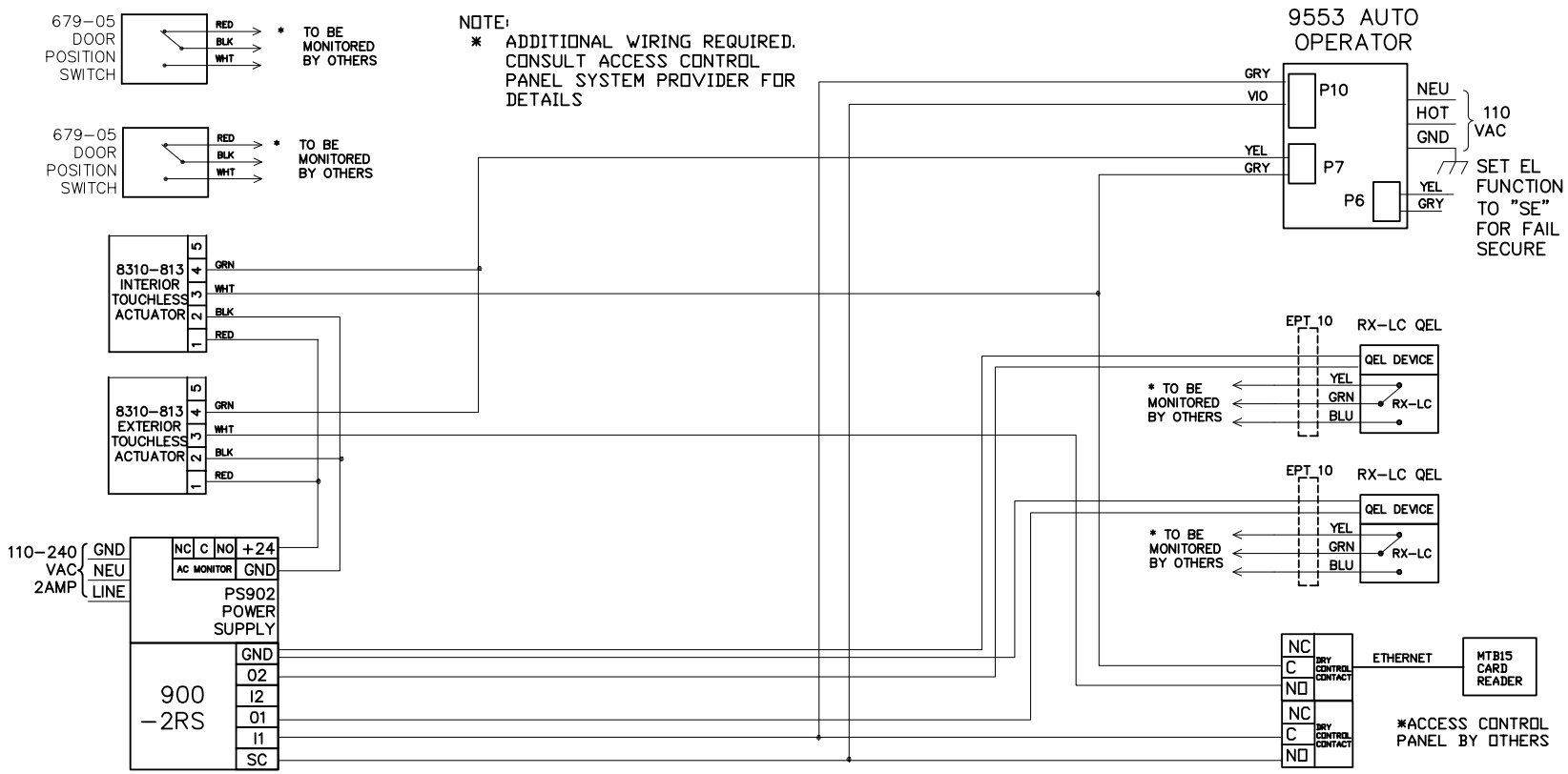

NOTES:
1) ALL LOW VOLTAGE WIRING TO BE STANDARD, MULTI-CONDUCTOR COLOR CODED WITHOUT SPLICES.

2) WIRING TO CONFORM TO APPLICABLE NATIONAL, STATE AND LOCAL ELECTRICAL CODES.

3) REFER TO SPECIFIC PRODUCT INSTALLATION INSTRUCTIONS FOR SPECIFIC WIRING REQUIREMENTS.

4) THIS DRAWING IS FOR GRAPHICAL REPRESENTATION OF PRODUCTS DETAILED IN THE HARDWARE SET ONLY.

5) * CONDUCTOR COUNT TO BE DETERMINED BY ACCESS CONTROL PANEL PROVIDER.

HARDWARE USED:

2 RXLC QEL 9847L-F LBR FIRE RATED EXIT DEVICES

2 EPT10

1 LCN 9553 AUTO OPERATOR

2 LCN 8310-810R TOUCHLESS ACTUATORS

1 SCHLAGE PS902-2RS-BB POWER SUPPLY

2 679-05 DOOR POSITION SWITCHES

1 MTB15 READER TO ACCESS CONTROL SYSTEM BY OTHERS

OPERATION:
DOORS NORMALLY CLOSED AND LOCKED

ENTRY BY VALID CREDENTIAL OR KEY OVERRIDE. CREDENTIAL SIGNALS QEL LATCH RETRACTION ON BOTH FIRE RATED EXIT DEVICE AND ENABLES EXTERIOR ACTUATOR. INTERIOR ACTUATOR ALWAYS ACTIVE TO RETRACT LATCHES AND OPEN DOOR.

RXLC AND 679 DPS SWITCHES TO BE REMOTELY MONITORED BY ACCESS CONTROL SYSTEM BY OTHERS, CONNECTIONS AND WIRING NOT SHOWN HERE.

CONFIRM PoE SOURCE SUFFICIENT FOR LOAD

FREE EGRESS AT ALL TIMES

DATE DRAWN: 10-13-20

REVISION DATE: 10-13-20

ALLEGION™

TITLE:
INTERIOR CROSS-CORRIDOR, LATCHING, FIRE RATED PAIR OF DOORS WITH AUTO OPERATOR

DRAWING TYPE: WIRING DIAGRAM

DWG NO: 113715W

DRAWN/CHECKED BY: B DOVE

REV A

THIS DIAGRAM REPRESENTS A GENERIC CONFIGURATION. CUSTOM WIRING DIAGRAMS CAN BE ACQUIRED BY CONTACTING TECHNICAL SUPPORT.

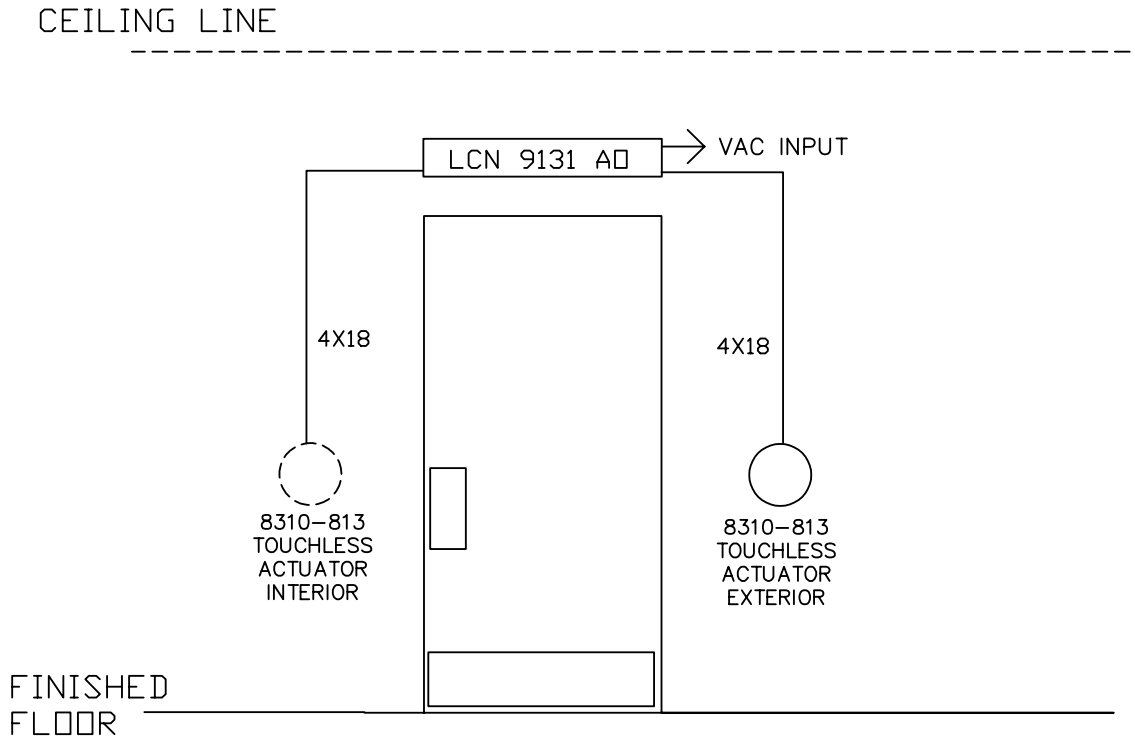

NOTES:
1) ALL LOW VOLTAGE WIRING TO BE STANDARD, MULTI-CONDUCTOR COLOR CODED WITHOUT SPLICES.

2) WIRING TO CONFORM TO APPLICABLE NATIONAL, STATE AND LOCAL ELECTRICAL CODES.

3) REFER TO SPECIFIC PRODUCT INSTALLATION INSTRUCTIONS FOR SPESCIFIC WIRING REQUIREMENTS.

4) THIS DRAWING IS FOR GRAPHICAL REPRESENTATION OF PRODUCTS DETAILED IN THE HARDWARE SET ONLY.

5) * CONDUCTOR COUNT TO BE DETERMINED BY ACCESS CONTROL PANEL PROVIDER.

HARDWARE USED:
1 LCN 9131 AUTO OPERATOR

2 LCN 8310-813 TOUCHLESS ACTUATORS

OPERATION:

NON-LATCHING, NON RATED RESTROOM DOOR

PRESSING EITHER INTERIOR OR EXTERIOR ACTUATOR TO CAUSE DOOR TO OPEN VIA LCN 9131 AUTO OPERATOR.

DATE DRAWN: 10-13-20

REVISION DATE: 10-13-20

ALLEGION™

TITLE: RESTROOM, NON-LATCHING WITH AUTO OPERATOR

DRAWING TYPE: RISER DIAGRAM

DWG NO: 113716R

DRAWN/CHECKED BY: B DOVE

REV A

THIS DIAGRAM REPRESENTS A GENERIC CONFIGURATION. CUSTOM WIRING DIAGRAMS CAN BE ACQUIRED BY CONTACTING TECHNICAL SUPPORT.

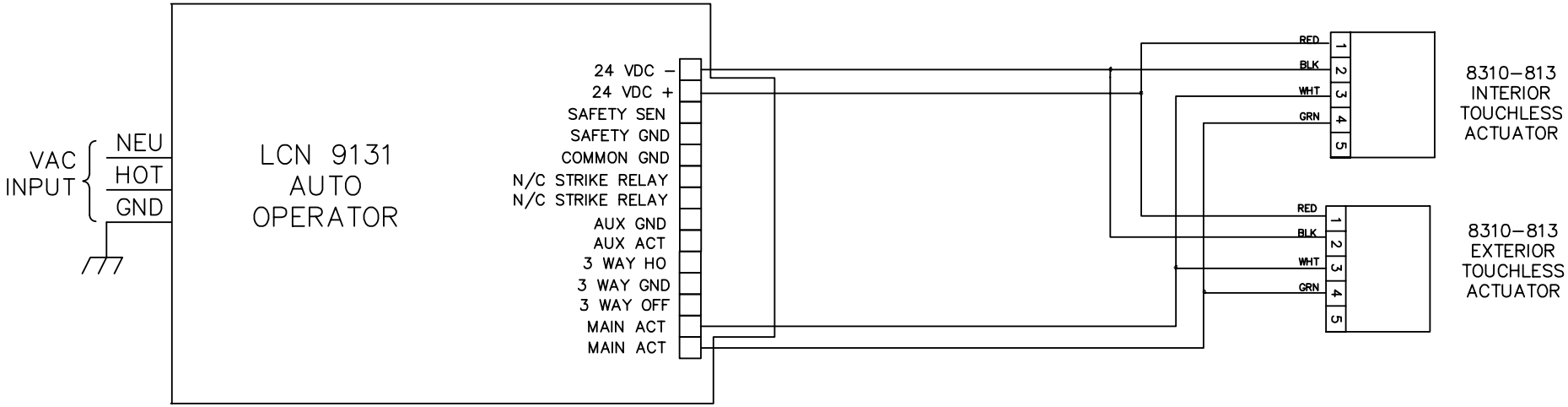

NOTES:
1) ALL LOW VOLTAGE WIRING TO BE STANDARD, MULTI-CONDUCTOR COLOR CODED WITHOUT SPLICES.

2) WIRING TO CONFORM TO APPLICABLE NATIONAL, STATE AND LOCAL ELECTRICAL CODES.

3) REFER TO SPECIFIC PRODUCT INSTALLATION INSTRUCTIONS FOR SPESCIFIC WIRING REQUIREMENTS.

4) THIS DRAWING IS FOR GRAPHICAL REPRESENTATION OF PRODUCTS DETAILED IN THE HARDWARE SET ONLY.

5) * CONDUCTOR COUNT TO BE DETERMINED BY ACCESS CONTROL PANEL PROVIDER.

HARDWARE USED:

1 LCN 9131 AUTO OPERATOR

2 LCN 8310-813 TOUCHLESS ACTUATORS

OPERATION:

NON-LATCHING, NON RATED RESTROOM DOOR

PRESSING EITHER INTERIOR OR EXTERIOR ACTUATOR TO CAUSE DOOR TO OPEN VIA LCN 9131 AUTO OPERATOR.

DATE DRAWN: 10-13-20

REVISION DATE: 10-13-20

ALLEGION™

TITLE: RESTROOM, NON-LATCHING WITH AUTO OPERATOR

DRAWING TYPE: WIRING DIAGRAM

DWG NO: 113716W

DRAWN/CHECKED BY: B DOVE

A

THIS DIAGRAM REPRESENTS A GENERIC CONFIGURATION. CUSTOM WIRING DIAGRAMS CAN BE ACQUIRED BY CONTACTING TECHNICAL SUPPORT.

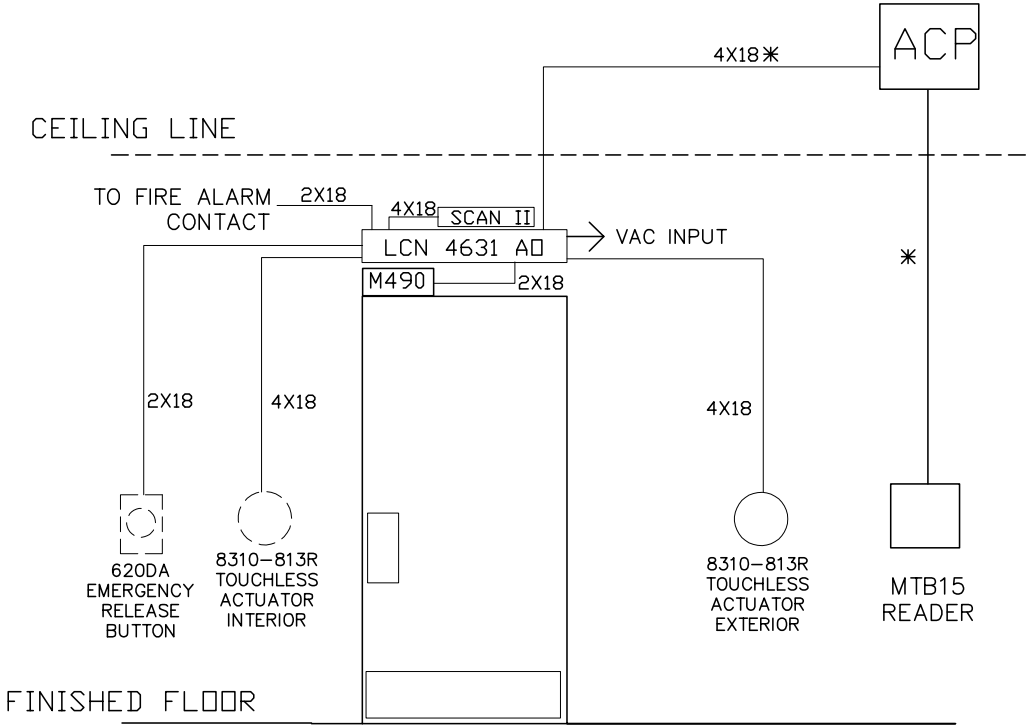

NOTE:
✳ADDITIONAL WIRING IS REQUIRED FOR ACCESS CONTROL SYSTEM BY OTHERS. SEE MANUFACTURER INSTALLATION INSTRUCTION

IN THIS EXAMPLE ALL WIRING CONNECTIONS EXCEPT MTB15 READER ARE MADE AT THE LCN 4630 AUTO OPERATOR

NOTES:
1) ALL LOW VOLTAGE WIRING TO BE STANDARD, MULTI-CONDUCTOR COLOR CODED WITHOUT SPLICES.

2) WIRING TO CONFORM TO APPLICABLE NATIONAL, STATE AND LOCAL ELECTRICAL CODES.

3) REFER TO SPECIFIC PRODUCT INSTALLATION INSTRUCTIONS FOR SPESCIFIC WIRING REQUIREMENTS.

4) THIS DRAWING IS FOR GRAPHICAL REPRESENTATION OF PRODUCTS DETAILED IN THE HARDWARE SET ONLY.

5) ✳ CONDUCTOR COUNT TO BE DETERMINED BY ACCESS CONTROL PANEL PROVIDER.

HARDWARE USED:
1 LCN 4631 AUTO OPERATOR

2 LCN 8310-813R TOUCHLESS ACTUATORS

1 M490 MAG LOCK

1 SCAN II MOTION SENSOR

1 620DA PUSHBUTTON - FOR EMERGENCY RELEASE OF MAG LOCK

1 SCHLAGE MTB15 CARD READER BY OTHERS WITH ACP

FIRE ALARM CONTACT BY OTHERS

OPERATION:
M490 MAG LOCK TO SECURE NON-LATCHING DOOR.

PRESENTING CREDENTIAL TO MTB15 READER TO CAUSE ACCESS CONTROLL SYSTEM BY OTHERS TO RELEASE MAGLOCK AND ENABLE EXTERIOR ACTUATOR.

SCANII MOTION SENSOR OR 620DA PUSH BUTTON TO RELEASE M490 MAG LOCK FOR FREE EGRESS.

INTERIOR ACTUATOR ALWAYS ACTIVE TO RELEASE M490 MAGLOCK AND OPEN DOOR.

FIRE ALARM TO RELEASE DOORS IMMEDIATELY.

DATE DRAWN: 10-12-20

REVISION DATE: 10-12-20

ALLEGION™

TITLE: COMMON AREA SINGLE DOOR – NON LATCHING WITH MAGLOCK

DRAWING TYPE: RISER DIAGRAM

DWG NO: 113717R

DRAWN/CHECKED BY: B DOVE

REV A

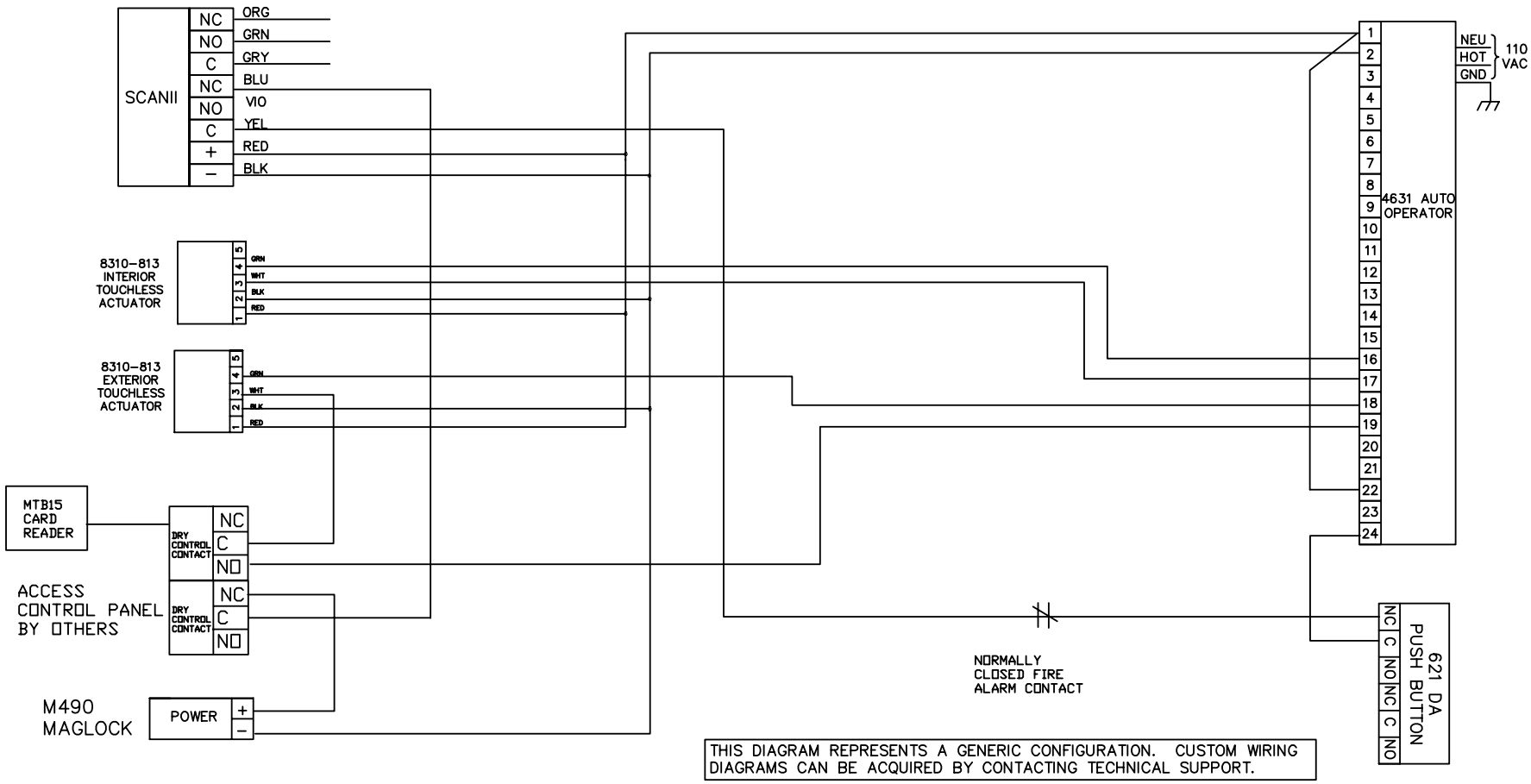

NOTES:
1) ALL LOW VOLTAGE WIRING TO BE STANDARD, MULTI-CONDUCTOR COLOR CODED WITHOUT SPLICES.

2) WIRING TO CONFORM TO APPLICABLE NATIONAL, STATE AND LOCAL ELECTRICAL CODES.

3) REFER TO SPECIFIC PRODUCT INSTALLATION INSTRUCTIONS FOR SPESCIFIC WIRING REQUIREMENTS.

4) THIS DRAWING IS FOR GRAPHICAL REPRESENTATION OF PRODUCTS DETAILED IN THE HARDWARE SET ONLY.

5) * CONDUCTOR COUNT TO BE DETERMINED BY ACCESS CONTROL PANEL PROVIDER.

HARDWARE USED:
1 LCN 4631 AUTO OPERATOR

2 LCN 8310-813R TOUCHLESS ACTUATORS

1 M490 MAG LOCK

1 SCAN II MOTION SENSOR

1 620DA PUSHBUTTON - FOR EMERGENCY RELEASE OF MAG LOCK

1 SCHLAGE MTB15 CARD READER BY OTHERS WITH ACP

FIRE ALARM CONTACT BY OTHERS

OPERATION:
M490 MAG LOCK TO SECURE NON-LATCHING DOOR.

PRESENTING CREDENTIAL TO MTB15 READER TO CAUSE ACCESS CONTROLL SYSTEM BY OTHERS TO RELEASE MAGLOCK AND ENABLE EXTERIOR ACTUATOR.

SCANII MOTION SENSOR OR 620DA PUSH BUTTON TO RELEASE M490 MAG LOCK FOR FREE EGRESS.

INTERIOR ACTUATOR ALWAYS ACTIVE TO RELEASE M490 MAGLOCK AND OPEN DOOR.

FIRE ALARM TO RELEASE DOORS IMMEDIATELY.

DATE DRAWN: 10-12-20

REVISION DATE: 10-12-20

ALLEGION™

TITLE: COMMON AREA SINGLE DOOR – NON LATCHING WITH MAGLOCK

DRAWING TYPE: WIRING DIAGRAM

DWG NO: 113717W

DRAWN/CHECKED BY: B DOVE

A

THIS DIAGRAM REPRESENTS A GENERIC CONFIGURATION. CUSTOM WIRING DIAGRAMS CAN BE ACQUIRED BY CONTACTING TECHNICAL SUPPORT.

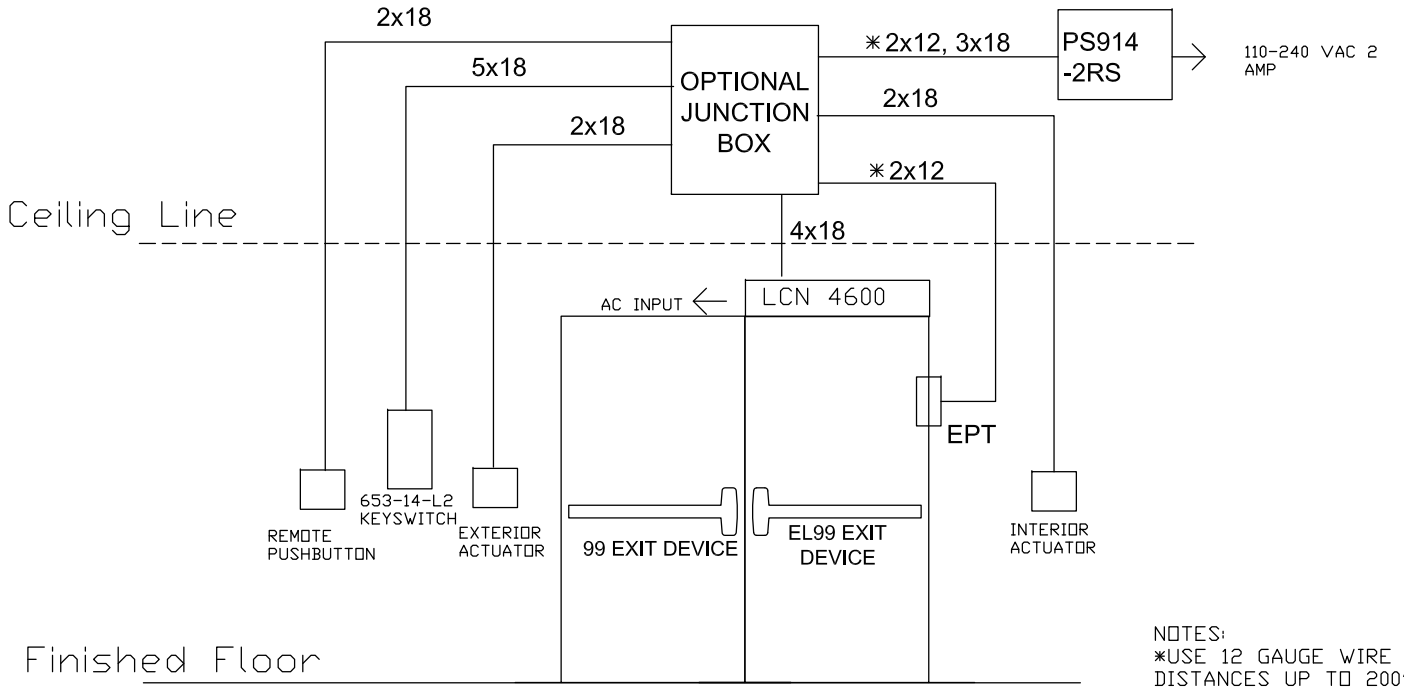

NOTES:
*USE 12 GAUGE WIRE FOR DISTANCES UP TO 200' FROM EPT TO PS914
*USE 14 GAUGE WIRE FOR DISTANCES UP TO 100' FROM EPT TO PS914

NOTES:
1) ALL LOW VOLTAGE WIRING TO BE STANDARD, MULTI-CONDUCTOR COLOR CODED WITHOUT SPLICES.

2) WIRING TO CONFORM TO APPLICABLE NATIONAL, STATE AND LOCAL ELECTRICAL CODES.

3) REFER TO SPECIFIC PRODUCT INSTALLATION INSTRUCTIONS FOR SPECIFIC WIRING REQUIREMENTS.

4) THIS DRAWING IS FOR GRAPHICAL REPRESENTATION OF PRODUCTS DETAILED IN THE HARDWARE SET ONLY.

5) ADDITIONAL WIRING WILL BE REQUIRED FROM ACP THAT IS NOT SHOWN HERE. CONSULT PROVIDER FOR DETAILS.

HARDWARE USED:
1 - PS914-2RS
1 - 653-14-L2 KEYSWITCH
1 - LCN 4600 AUTO OPERATOR
2 - ACTUATORS
1 - PUSHBUTTON
1 - EL PANIC DEVICE
1 - EPT
1 - OPTIONAL JUNCTION BOX

TYPE
DOUBLE DOORS

OPERATION:
DOOR NORMALLY CLOSED & LOCKED.

KEYSWITCH RETRACTS LATCH & ENABLES EXTERIOR ACTUATOR.

INTERIOR & REMOTE PUSHBUTTONS ARE ALWAYS ACTIVE TO RETRACT THE ELECTRIC LATCH & SWING THE DOOR.

FREE EGRESS AT ALL TIMES.

DATE DRAWN: 03-26-13
REVISION DATE: 04-15-14
DRAWN BY: B DOVE
APPROVED BY: MH

ALLEGION™

TITLE: PS914-2RS EL 4640 2XPB 653-14-L2 X REMOTE PB

DRAWING TYPE: RISER
DWG NO: 104970
DRAWN/CHECKED BY: B DOVE
REV D

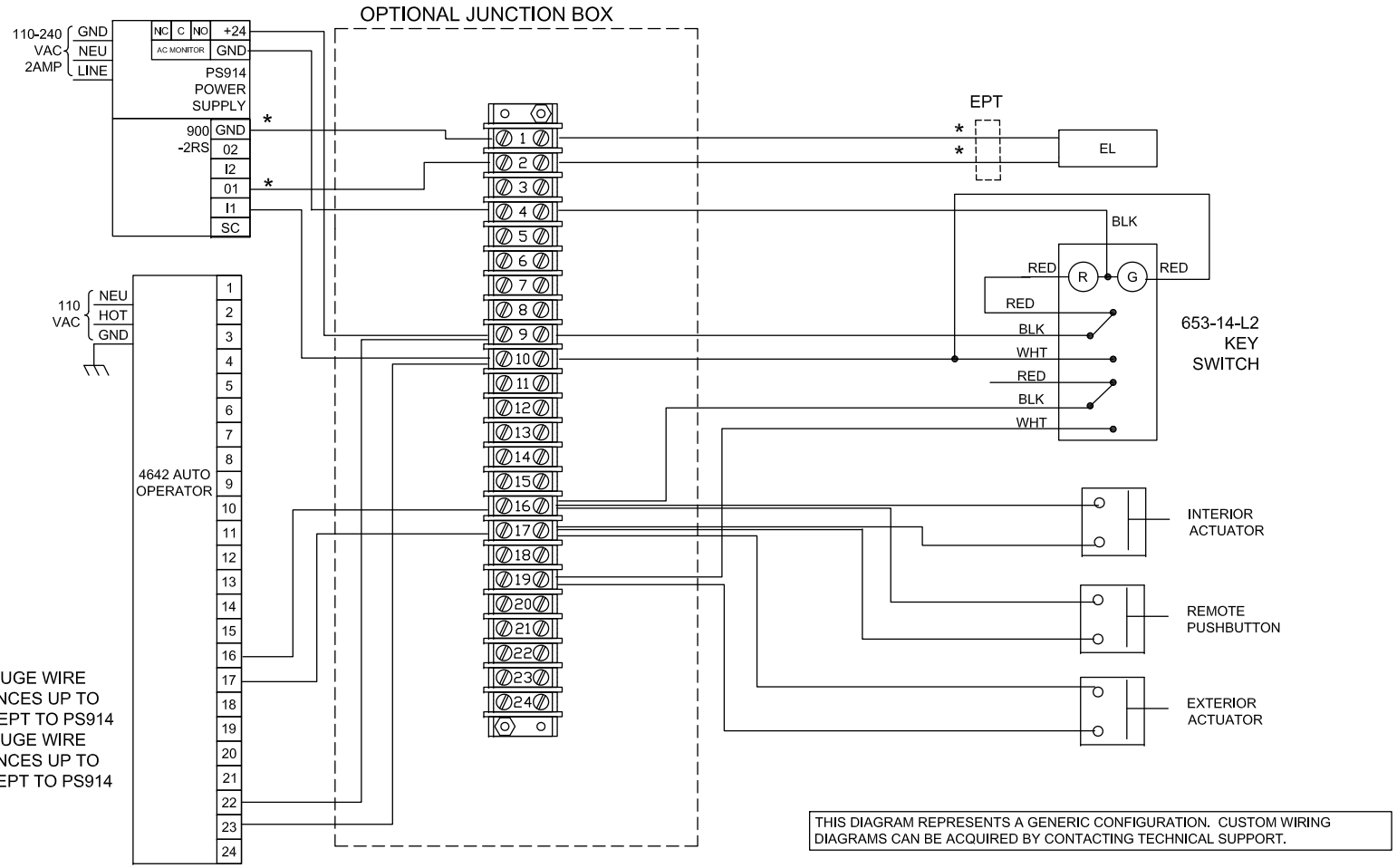

NOTES:
*USE 12 GAUGE WIRE FOR DISTANCES UP TO 200' FROM EPT TO PS914
*USE 14 GAUGE WIRE FOR DISTANCES UP TO 100' FROM EPT TO PS914

THIS DIAGRAM REPRESENTS A GENERIC CONFIGURATION. CUSTOM WIRING DIAGRAMS CAN BE ACQUIRED BY CONTACTING TECHNICAL SUPPORT.

NOTES:
1) ALL LOW VOLTAGE WIRING TO BE STANDARD, MULTI-CONDUCTOR COLOR CODED WITHOUT SPLICES.

2) WIRING TO CONFORM TO APPLICABLE NATIONAL, STATE AND LOCAL ELECTRICAL CODES.

3) REFER TO SPECIFIC PRODUCT INSTALLATION INSTRUCTIONS FOR SPECIFIC WIRING REQUIREMENTS.

4) THIS DRAWING IS FOR GRAPHICAL REPRESENTATION OF PRODUCTS DETAILED IN THE HARDWARE SET ONLY.

5) ADDITIONAL WIRING WILL BE REQUIRED FROM ACP THAT IS NOT SHOWN HERE. CONSULT PROVIDER FOR DETAILS.

HARDWARE USED:
- 1 - PS914-2RS
- 1 - 653-14-L2 KEYSWITCH
- 1 - LCN 4600 AUTO OPERATOR
- 2 - ACTUATORS
- 1 - PUSHBUTTON
- 1 - EL PANIC DEVICE
- 1 - EPT
- 1 - OPTIONAL JUNCTION BOX

TYPE: DOUBLE DOORS

OPERATION:
DOOR NORMALLY CLOSED & LOCKED.

KEYSWITCH RETRACTS LATCH & ENABLES EXTERIOR ACTUATOR.

INTERIOR & REMOTE PUSHBUTTONS ARE ALWAYS ACTIVE TO RETRACT THE ELECTRIC LATCH & SWING THE DOOR.

FREE EGRESS AT ALL TIMES.

DATE DRAWN: 03-26-13	REVISION DATE: 04-15-14
DRAWN BY: B DOVE	APPROVED BY: MH

ALLEGION™

TITLE: PS914-2RS EL 4640 2XPB 653-14-L2 X REMOTE PB

DRAWING TYPE: WIRING	DWG NO: 104970	REV D
	DRAWN/CHECKED BY: B DOVE	

THIS DIAGRAM REPRESENTS A GENERIC CONFIGURATION. CUSTOM WIRING DIAGRAMS CAN BE ACQUIRED BY CONTACTING TECHNICAL SUPPORT.

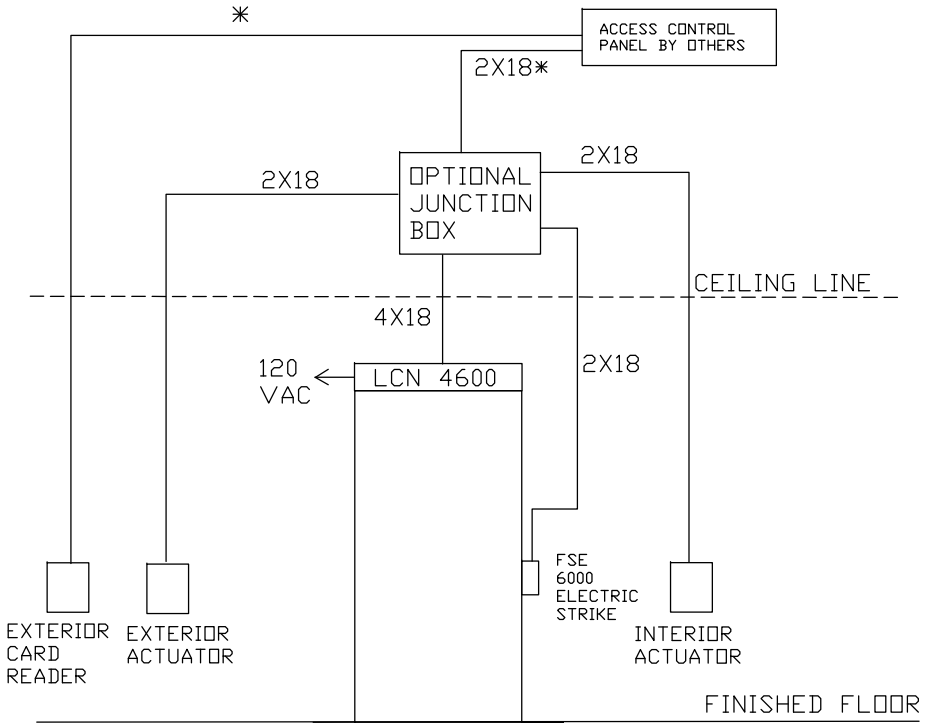

NOTES:
* CONSULT ACCESS CONTROL PANEL AND CARD READER PROVIDER TO DETERMINE CONDUCTOR COUNT AND WIRE SIZE.

NOTES:
1) ALL LOW VOLTAGE WIRING TO BE STANDARD, MULTI-CONDUCTOR COLOR CODED WITHOUT SPLICES.

2) WIRING TO CONFORM TO APPLICABLE NATIONAL, STATE AND LOCAL ELECTRICAL CODES.

3) REFER TO SPECIFIC PRODUCT INSTALLATION INSTRUCTIONS FOR SPECIFIC WIRING REQUIREMENTS.

4) THIS DRAWING IS FOR GRAPHICAL REPRESENTATION OF PRODUCTS DETAILED IN THE HARDWARE SET ONLY.

5) ADDITIONAL WIRING WILL BE REQUIRED FROM ACP THAT IS NOT SHOWN HERE. CONSULT PROVIDER FOR DETAILS.

HARDWARE USED:
1 LCN 4600 AUTO OPERATOR
2 ACTUATORS
1 EXTERIOR CARD READER/ACP BY OTHERS
1 VD FSE 6000 ELECTRIC STRIKE
1 OPTIONAL JUNCTION BOX

TYPE
SINGLE DOOR

OPERATION:
DOOR NORMALLY CLOSED & LOCKED.
VALID ACCESS CONTROL READ ENABLES EXTERIOR ACTUATOR.
PRESSING EITHER ACTUATOR UNLOCKS ELECTRIC STRIKE AND OPENS DOOR.
FREE EGRESS AT ALL TIMES.

DATE DRAWN: 03-27-13
REVISION DATE: 04-16-14
DRAWN BY: B DOVE
APPROVED BY: MH

ALLEGION™

TITLE: SINGLE LCN 4600 AO 6000 FSE ELECTRIC STRIKE X 2 ACTUATORS X CARD READER/ACP

DRAWING TYPE: RISER
DWG NO: 104972
DRAWN/CHECKED BY: B DOVE
REV D

THIS DIAGRAM REPRESENTS A GENERIC CONFIGURATION. CUSTOM WIRING DIAGRAMS CAN BE ACQUIRED BY CONTACTING TECHNICAL SUPPORT.

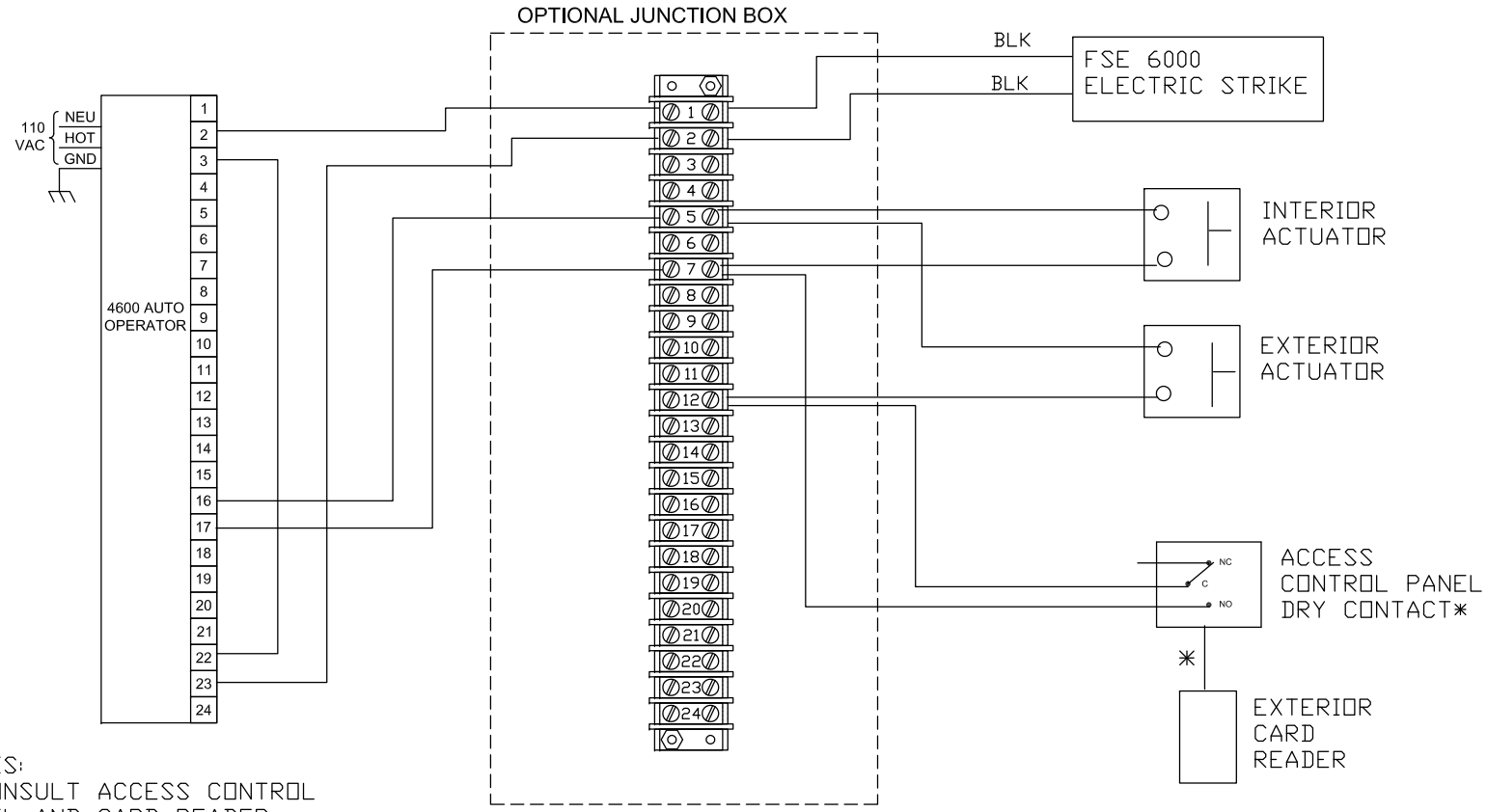

NOTES:
* CONSULT ACCESS CONTROL PANEL AND CARD READER PROVIDER TO DETERMINE CONDUCTOR COUNT AND WIRE SIZE.

NOTES:
1) ALL LOW VOLTAGE WIRING TO BE STANDARD, MULTI-CONDUCTOR COLOR CODED WITHOUT SPLICES.

2) WIRING TO CONFORM TO APPLICABLE NATIONAL, STATE AND LOCAL ELECTRICAL CODES.

3) REFER TO SPECIFIC PRODUCT INSTALLATION INSTRUCTIONS FOR SPECIFIC WIRING REQUIREMENTS.

4) THIS DRAWING IS FOR GRAPHICAL REPRESENTATION OF PRODUCTS DETAILED IN THE HARDWARE SET ONLY.

5) ADDITIONAL WIRING WILL BE REQUIRED FROM ACP THAT IS NOT SHOWN HERE. CONSULT PROVIDER FOR DETAILS.

HARDWARE USED:
1 LCN 4600 AUTO OPERATOR
2 ACTUATORS
1 EXTERIOR CARD READER/ACP BY OTHERS
1 VD FSE 6000 ELECTRIC STRIKE
1 OPTIONAL JUNCTION BOX

TYPE
SINGLE DOOR

OPERATION:
DOOR NORMALLY CLOSED & LOCKED.
VALID ACCESS CONTROL READ ENABLES EXTERIOR ACTUATOR.
PRESSING EITHER ACTUATOR UNLOCKS ELECTRIC STRIKE AND OPENS DOOR.
FREE EGRESS AT ALL TIMES.

DATE DRAWN: 03-27-13
REVISION DATE: 04-16-14
DRAWN BY: B DOVE
APPROVED BY: MH

ALLEGION™

TITLE: SINGLE LCN 4600 AO 6000 FSE ELECTRIC STRIKE X 2 ACTUATORS X CARD READER/ACP

DRAWING TYPE: WIRING
DWG NO: 104972
DRAWN/CHECKED BY: B DOVE
REV D

THIS DIAGRAM REPRESENTS A GENERIC CONFIGURATION. CUSTOM WIRING DIAGRAMS CAN BE ACQUIRED BY CONTACTING TECHNICAL SUPPORT.

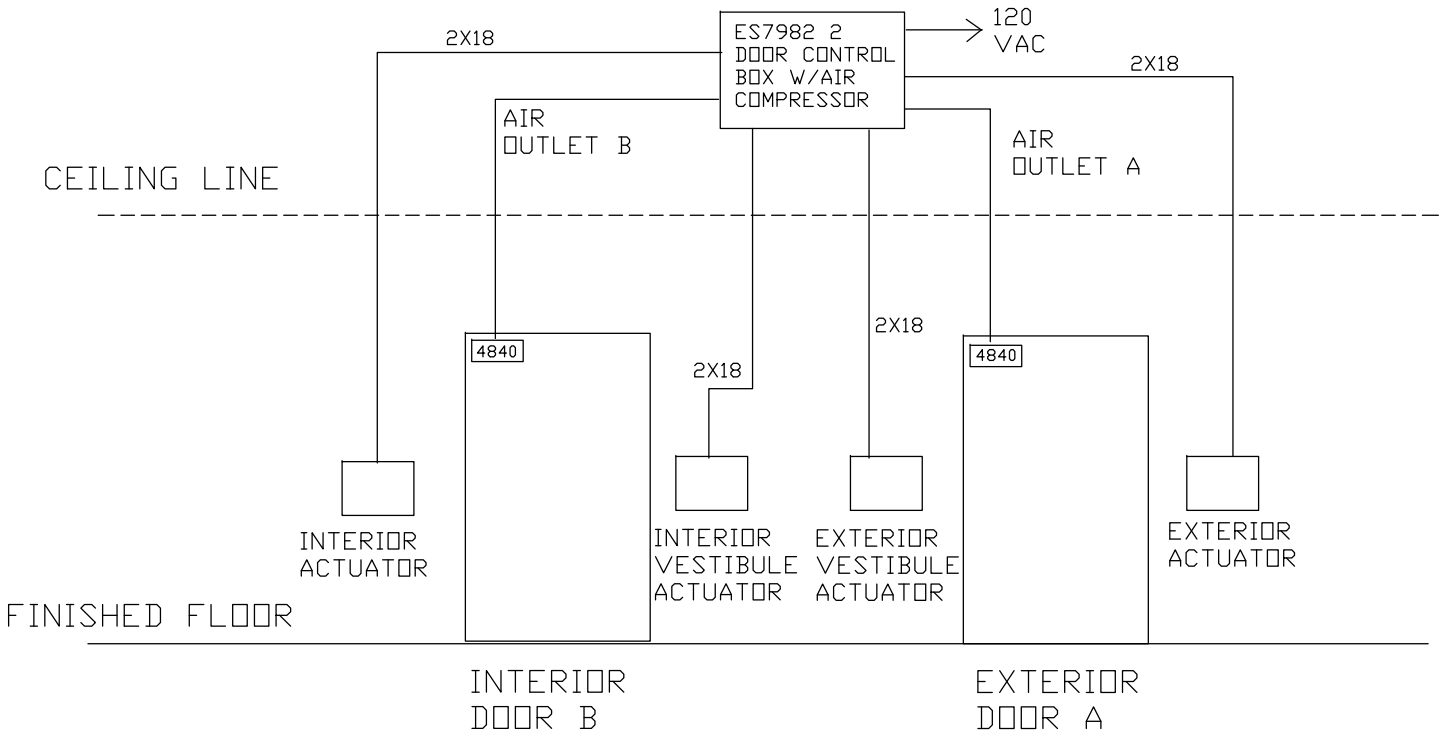

NOTES:
1) ALL LOW VOLTAGE WIRING TO BE STANDARD, MULTI-CONDUCTOR COLOR CODED WITHOUT SPLICES.

2) WIRING TO CONFORM TO APPLICABLE NATIONAL, STATE AND LOCAL ELECTRICAL CODES.

3) REFER TO SPECIFIC PRODUCT INSTALLATION INSTRUCTIONS FOR SPECIFIC WIRING REQUIREMENTS.

4) THIS DRAWING IS FOR GRAPHICAL REPRESENTATION OF PRODUCTS DETAILED IN THE HARDWARE SET ONLY.

5) ADDITIONAL WIRING WILL BE REQUIRED FROM ACP THAT IS NOT SHOWN HERE. CONSULT PROVIDER FOR DETAILS.

HARDWARE USED:
1 - ES7982 CONTROL BOX
4 - 4840 ACTUATORS
2 4840 AUTO OPERATORS

TYPE: 2 SINGLE DOORS

OPERATION:
DOORS NORMALLY CLOSED.
PUSHING INTERIOR VESTIBULE ACTUATOR OPENS INTERIOR DOOR.
PUSHING EXTERIOR VESTIBULE ACTUATOR OPENS EXTERIOR DOOR.
PUSHING INTERIOR ACTUATOR OPENS INTERIOR DOOR & THEN EXTERIOR DOOR IN SEQUENCE.
PUSHING EXTERIOR ACTUATOR OPENS EXTERIOR DOOR & THEN FREE EGRESS AT ALL TIMES.

DATE DRAWN: 03-26-13
REVISION DATE: 04-16-14
DRAWN BY: B DOVE
APPROVED BY: MH

ALLEGION™

TITLE: 2 SINGLE DOORS ES7982 X 2 4840 ACTUATORS

DRAWING TYPE: RISER
DWG NO: 104968
DRAWN/CHECKED BY: B DOVE
REV: D

THIS DIAGRAM REPRESENTS A GENERIC CONFIGURATION. CUSTOM WIRING DIAGRAMS CAN BE ACQUIRED BY CONTACTING TECHNICAL SUPPORT.

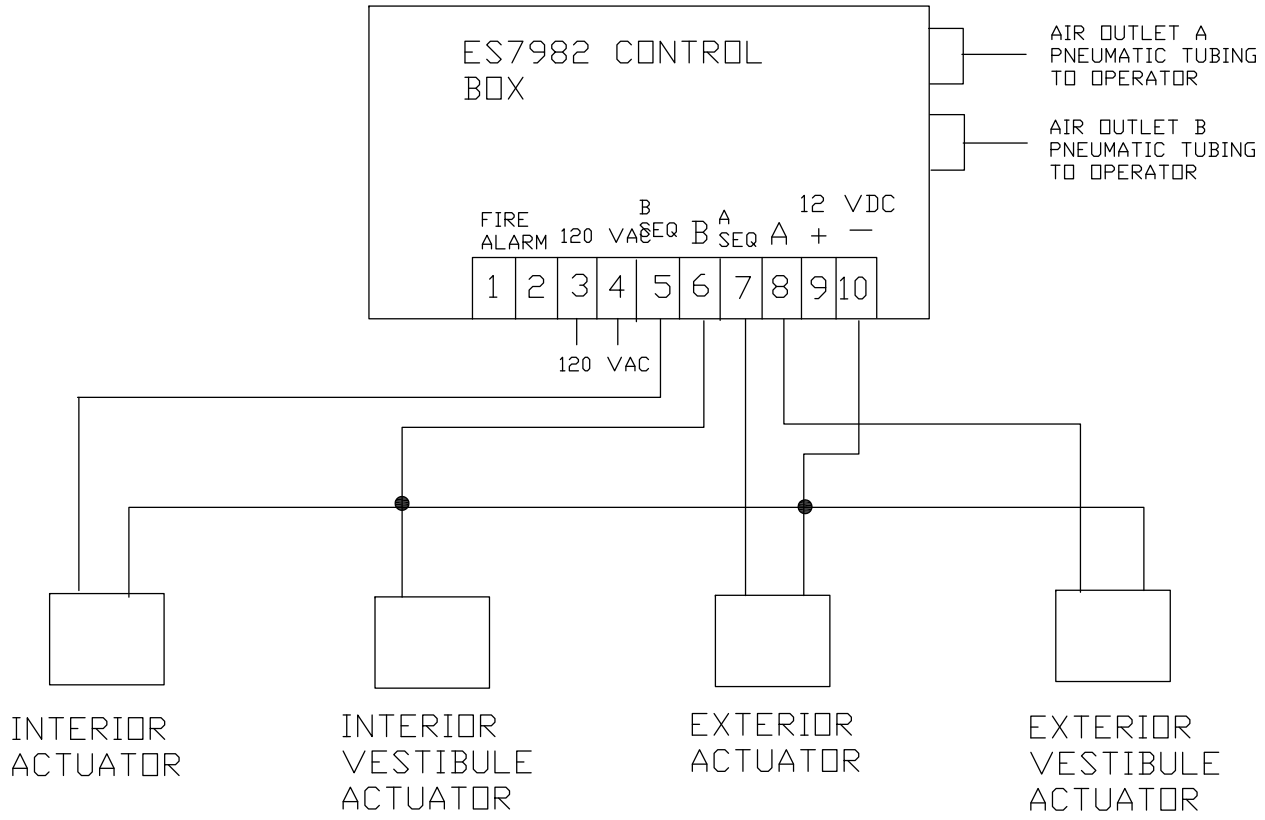

NOTES:
1) ALL LOW VOLTAGE WIRING TO BE STANDARD, MULTI-CONDUCTOR COLOR CODED WITHOUT SPLICES.

2) WIRING TO CONFORM TO APPLICABLE NATIONAL, STATE AND LOCAL ELECTRICAL CODES.

3) REFER TO SPECIFIC PRODUCT INSTALLATION INSTRUCTIONS FOR SPECIFIC WIRING REQUIREMENTS.

4) THIS DRAWING IS FOR GRAPHICAL REPRESENTATION OF PRODUCTS DETAILED IN THE HARDWARE SET ONLY.

5) ADDITIONAL WIRING WILL BE REQUIRED FROM ACP THAT IS NOT SHOWN HERE. CONSULT PROVIDER FOR DETAILS.

HARDWARE USED:
1 - ES7982 CONTROL BOX
4 - 4840 ACTUATORS
2 4840 AUTO OPERATORS

TYPE: 2 SINGLE DOORS

OPERATION:
DOORS NORMALLY CLOSED.
PUSHING INTERIOR VESTIBULE ACTUATOR OPENS INTERIOR DOOR.
PUSHING EXTERIOR VESTIBULE ACTUATOR OPENS EXTERIOR DOOR.
PUSHING INTERIOR ACTUATOR OPENS INTERIOR DOOR & THEN EXTERIOR DOOR IN SEQUENCE.
PUSHING EXTERIOR ACTUATOR OPENS EXTERIOR DOOR & THEN FREE EGRESS AT ALL TIMES.

DATE DRAWN: 03-26-13
REVISION DATE: 04-16-14
DRAWN BY: B DOVE
APPROVED BY: MH

ALLEGION™

TITLE: 2 SINGLE DOORS ES7982 X 2 4840 ACTUATORS

DRAWING TYPE: WIRING
DWG NO: 104968
DRAWN/CHECKED BY: B DOVE
REV: D

THIS DIAGRAM REPRESENTS A GENERIC CONFIGURATION. CUSTOM WIRING DIAGRAMS CAN BE ACQUIRED BY CONTACTING TECHNICAL SUPPORT.

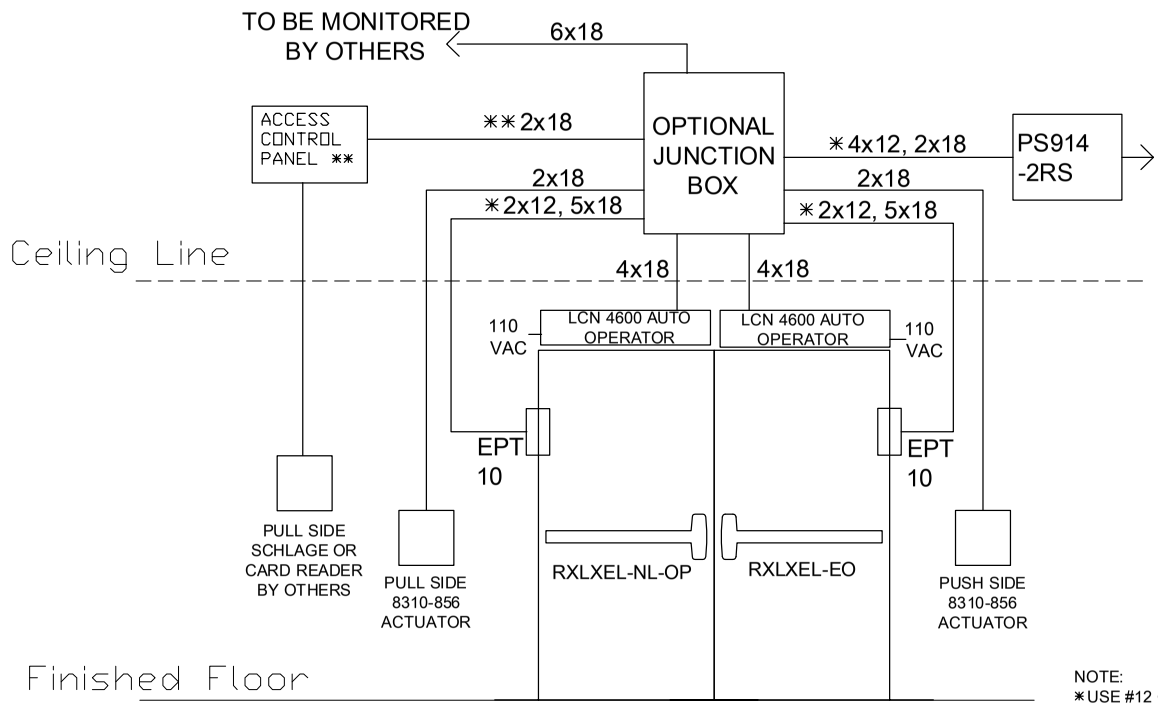

NOTE:
*USE #12 GAUGE WIRE FOR DISTANCES UP TO 200' FROM EPT TO PS914
*USE #14 GAUGE WIRE FOR DISTANCES UP TO 100' FROM EPT TO PS914
**ADDITIONAL WIRING IS REQUIRED. SEE MANUFACTURER INSTALLATION INSTRUCTION

OPTIONAL JUNCTION BOX IS AVAILABLE FROM VON DUPRIN AS A JB7

NOTES:
1) ALL LOW VOLTAGE WIRING TO BE STANDARD, MULTI-CONDUCTOR COLOR CODED WITHOUT SPLICES.

2) WIRING TO CONFORM TO APPLICABLE NATIONAL, STATE AND LOCAL ELECTRICAL CODES.

3) REFER TO SPECIFIC PRODUCT INSTALLATION INSTRUCTIONS FOR SPECIFIC WIRING REQUIREMENTS.

4) THIS DRAWING IS FOR GRAPHICAL REPRESENTATION OF PRODUCTS DETAILED IN THE HARDWARE SET ONLY.

5) ** CONDUCTOR COUNT TO BE DETERMINED BY ACCESS CONTROL PANEL PROVIDER.

HARDWARE USED:
1 RXLXEL EO PANIC
1 RXLXEL-NL-OP PANIC
2 EPT 10
2 8310-856 LCN ACTUATORS
2 4600 AUTO OPERATOR
1 SCHLAGE OR CARD READER BO WITH ACP BO

TYPE

OPERATION:
PUSH SIDE 8310-856 ACTUATOR TO RETRACT THE ELECTRIC PANIC BARS AND OPEN THE LCN 4600 AUTO OPERATORS.
SCHLAGE OR CARD READER BY OTHERS TO SIGNAL EL LATCH RETRACTION AND ENABLE EXTERIOR 8310-856 ACTUATOR

PULL SIDE 8310-856 ACTUATOR TO RETRACT THE ELECTRIC PANIC BARS WHEN ENABLED BY CARD READER AND ACCESS CONTROL PANEL

REQUEST EXIT SWITCH RX TO BE MONITORED BY OTHERS.

DATE DRAWN: 3-26-13
REVISION DATE: 07-03-17

ALLEGION™

TITLE: RXLXEL PAIR WITH LCN 4600 AO AND PS914-2RS

DRAWING TYPE: RISER DIAGRAM

DWG NO: 109463

DRAWN/CHECKED BY: B DOVE/D BOLLENGIER

REV C

THIS DIAGRAM REPRESENTS A GENERIC CONFIGURATION. CUSTOM WIRING DIAGRAMS CAN BE ACQUIRED BY CONTACTING TECHNICAL SUPPORT.

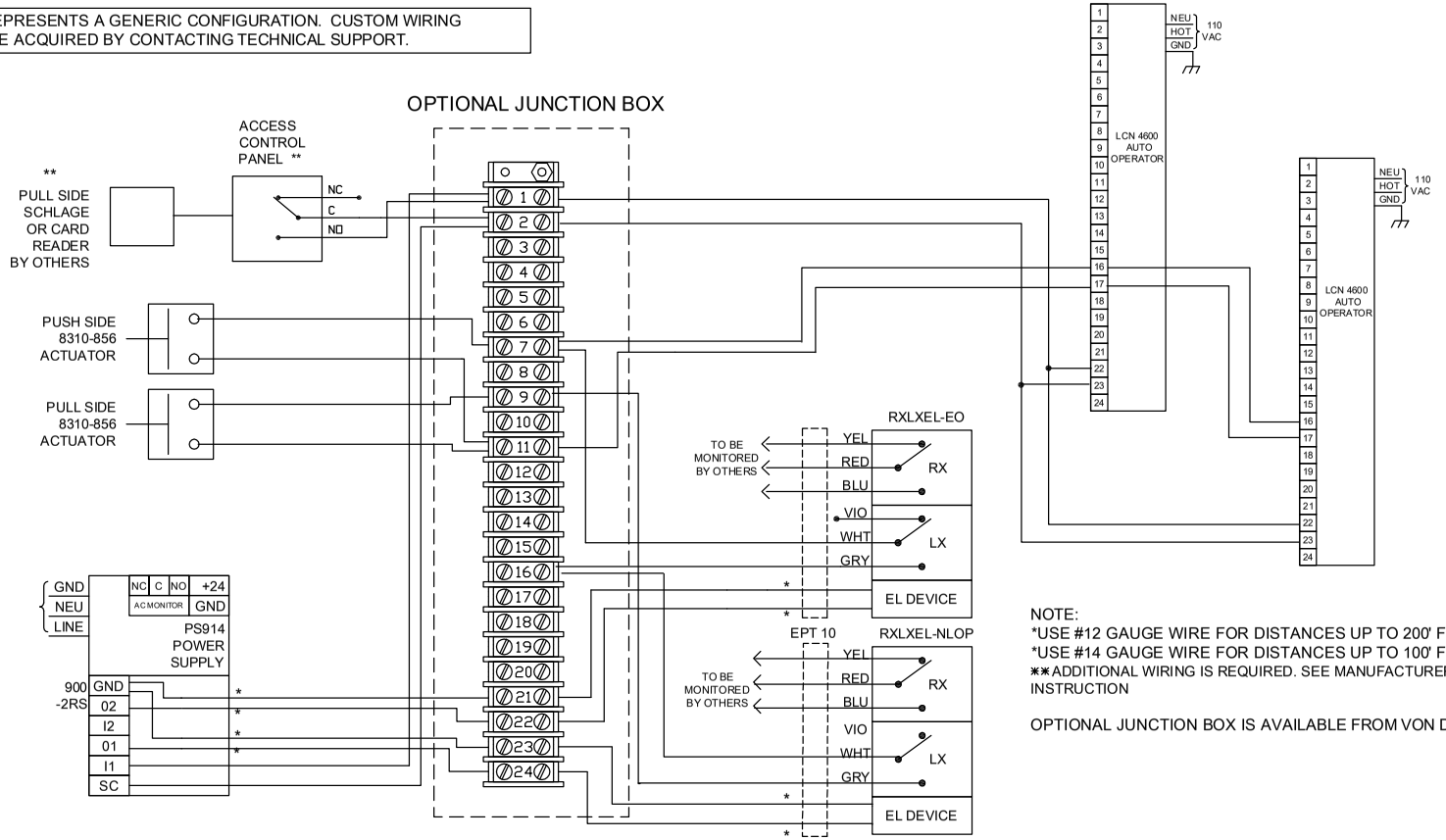

NOTE:
*USE #12 GAUGE WIRE FOR DISTANCES UP TO 200' FROM EPT TO PS914
*USE #14 GAUGE WIRE FOR DISTANCES UP TO 100' FROM EPT TO PS914
**ADDITIONAL WIRING IS REQUIRED. SEE MANUFACTURER INSTALLATION INSTRUCTION

OPTIONAL JUNCTION BOX IS AVAILABLE FROM VON DUPRIN AS A JB7

NOTES:
1) ALL LOW VOLTAGE WIRING TO BE STANDARD, MULTI-CONDUCTOR COLOR CODED WITHOUT SPLICES.

2) WIRING TO CONFORM TO APPLICABLE NATIONAL, STATE AND LOCAL ELECTRICAL CODES.

3) REFER TO SPECIFIC PRODUCT INSTALLATION INSTRUCTIONS FOR SPECIFIC WIRING REQUIREMENTS.

4) THIS DRAWING IS FOR GRAPHICAL REPRESENTATION OF PRODUCTS DETAILED IN THE HARDWARE SET ONLY.

5) ** CONDUCTOR COUNT TO BE DETERMINED BY ACCESS CONTROL PANEL PROVIDER.

HARDWARE USED:
1 RXLXEL EO PANIC
1 RXLXEL-NL-OP PANIC
2 EPT 10
2 8310-856 LCN ACTUATORS
2 4600 AUTO OPERATOR
1 SCHLAGE OR CARD READER BO WITH ACP BO

TYPE

OPERATION:
PUSH SIDE 8310-856 ACTUATOR TO RETRACT THE ELECTRIC PANIC BARS AND OPEN THE LCN 4600 AUTO OPERATOR.

SCHLAGE OR CARD READER BY OTHERS TO SIGNAL EL LATCH RETRACTION AND ENABLE EXTERIOR 8310-856 ACTUATOR

PULL SIDE 8310-856 ACTUATOR TO RETRACT THE ELECTRIC PANIC BARS WHEN ENABLED BY CARD READER AND ACCESS CONTROL PANEL

REQUEST EXIT SWITCH RX TO BE MONITORED BY OTHERS.

DATE DRAWN: 3-26-13
REVISION DATE: 07-03-17

ALLEGION™

TITLE: RXEL PAIR WITH LCN 4600 AO AND PS914-2RS

DRAWING TYPE: WIRING DIAGRAM
DWG NO: 109463
DRAWN/CHECKED BY: B DOVE/D BOLLENGIER
REV C

THIS DIAGRAM REPRESENTS A GENERIC CONFIGURATION. CUSTOM WIRING DIAGRAMS CAN BE ACQUIRED BY CONTACTING TECHNICAL SUPPORT.

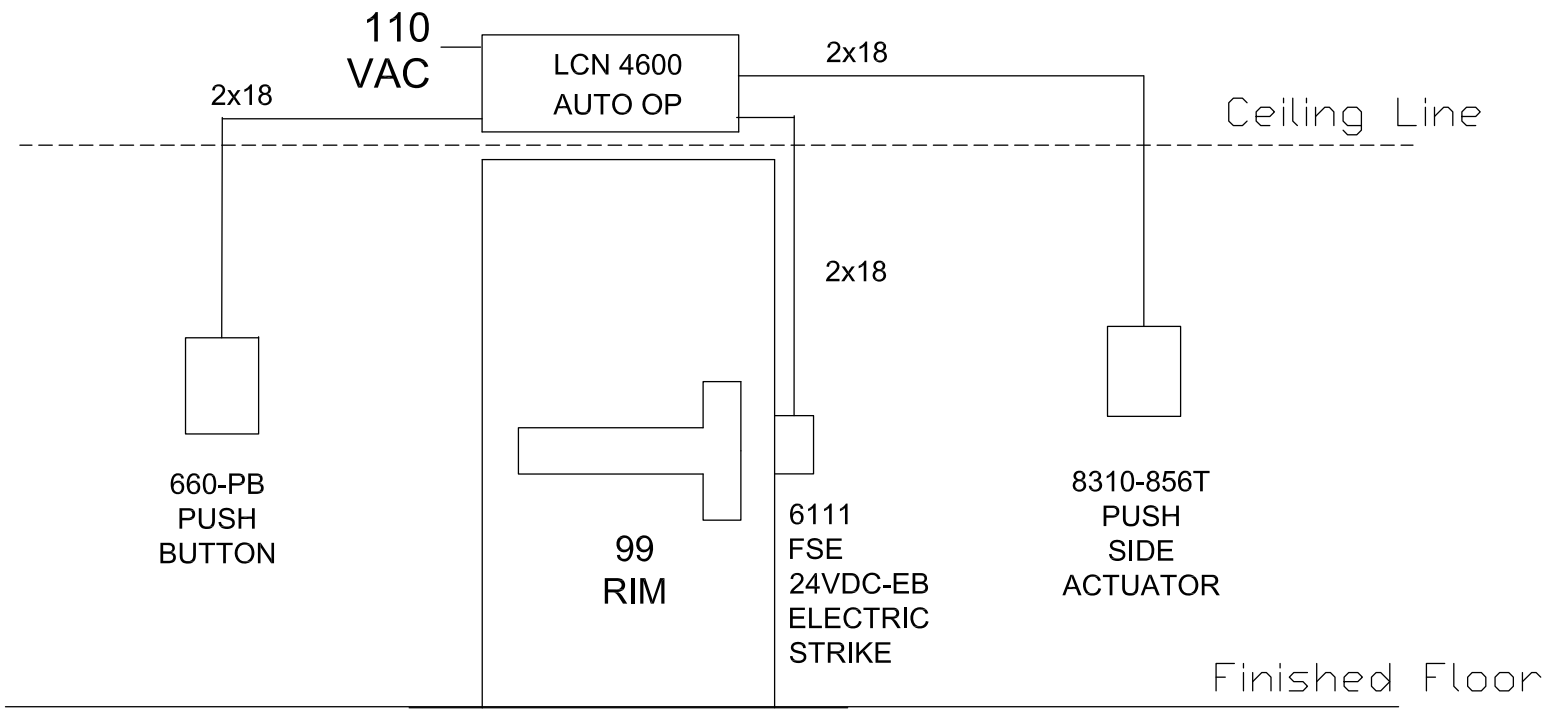

NOTES:
1) ALL LOW VOLTAGE WIRING TO BE STANDARD, MULTI-CONDUCTOR COLOR CODED WITHOUT SPLICES.

2) WIRING TO CONFORM TO APPLICABLE NATIONAL, STATE AND LOCAL ELECTRICAL CODES.

3) REFER TO SPECIFIC PRODUCT INSTALLATION INSTRUCTIONS FOR SPESCIFIC WIRING REQUIREMENTS.

4) THIS DRAWING IS FOR GRAPHICAL REPRESENTATION OF PRODUCTS DETAILED IN THE HARDWARE SET ONLY.

5) ADDITIONAL WIRING WILL BE REQUIRED FROM ACP THAT IS NOT SHOWN HERE. CONSULT PROVIDER FOR DETAILS.

HARDWARE USED:
1 4600 LCN AUTO OPERATOR
1 99 EXIT DEVICE
1 6111 FSE X EB ESTRIKE
1 660PB BUTTON
1 8310-856T ACTUATOR

TYPE
AUTO OPERATOR AND ACTUATORS

OPERATION:
8310-856 ACTUATOR FROM PUSH SIDE TO UNLOCK THE ELECTRIC STRIKE AND OPEN THE DOOR.

660PB REMOTE PUSH BUTTON TO UNLOCK THE 6111 FSE ELECTRIC STRIKE AND OPEN THE DOOR.

DATE DRAWN: 3-27-13
REVISION DATE: 3-27-13

copyright 2013

ALLEGION™

TITLE: LCN 4600 WITH 8310-856 ACT AND 660PB

DRAWING TYPE: RISER DIAGRAM

DWG NO: 109464

DRAWN/CHECKED BY: B DOVE/D BOLLENGIER

REV A

THIS DIAGRAM REPRESENTS A GENERIC CONFIGURATION. CUSTOM WIRING DIAGRAMS CAN BE ACQUIRED BY CONTACTING TECHNICAL SUPPORT.

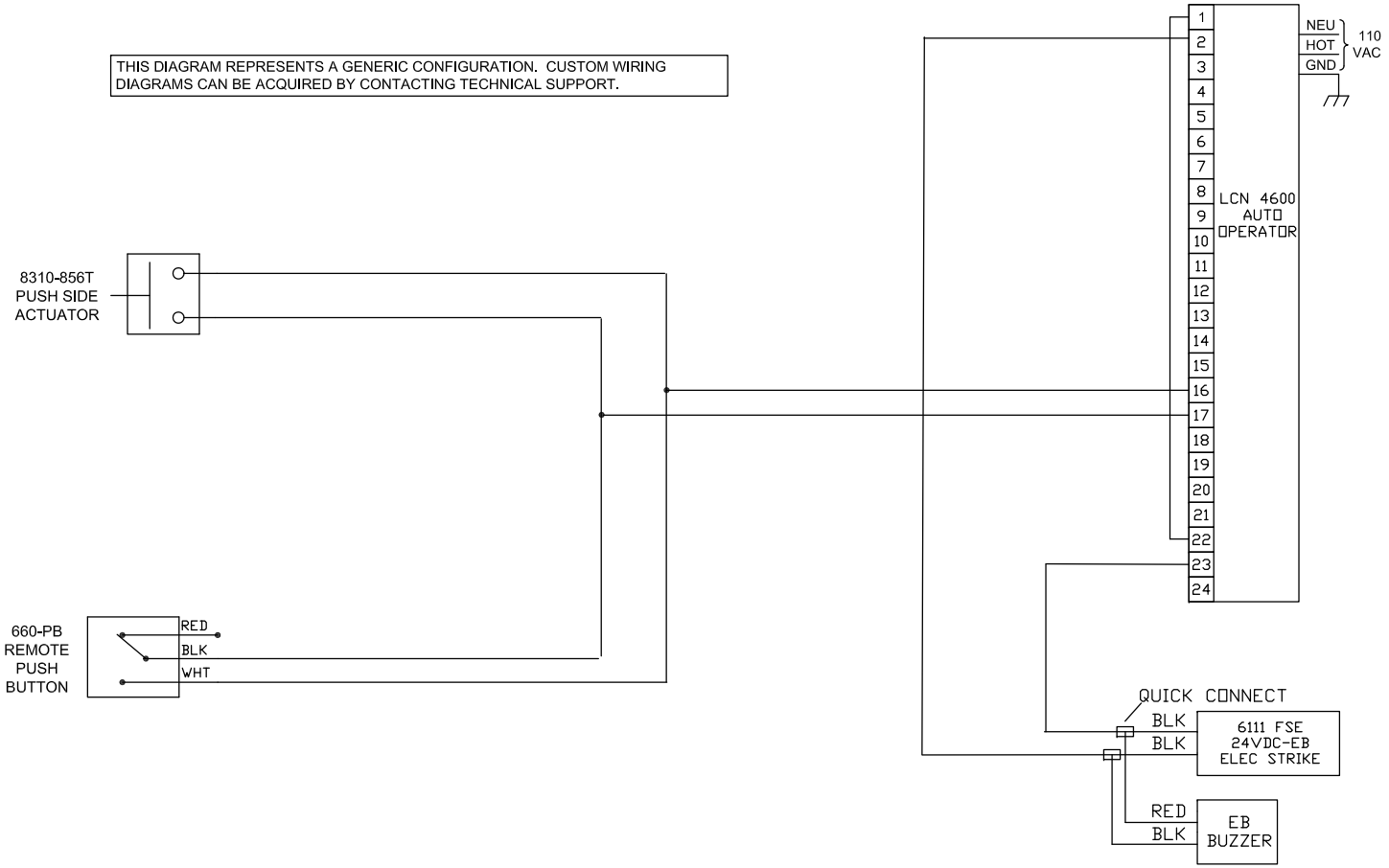

NOTES:
1) ALL LOW VOLTAGE WIRING TO BE STANDARD, MULTI-CONDUCTOR COLOR CODED WITHOUT SPLICES.

2) WIRING TO CONFORM TO APPLICABLE NATIONAL, STATE AND LOCAL ELECTRICAL CODES.

3) REFER TO SPECIFIC PRODUCT INSTALLATION INSTRUCTIONS FOR SPESCIFIC WIRING REQUIREMENTS.

4) THIS DRAWING IS FOR GRAPHICAL REPRESENTATION OF PRODUCTS DETAILED IN THE HARDWARE SET ONLY.

5) ADDITIONAL WIRING WILL BE REQUIRED FROM ACP THAT IS NOT SHOWN HERE. CONSULT PROVIDER FOR DETAILS.

HARDWARE USED:
1 4600 LCN AUTO OPERATOR
1 99 EXIT DEVICE
1 6111 FSE X EB ESTRIKE
1 660PB BUTTON
1 8310-856T ACTUATOR

TYPE
AUTO OPERATOR AND ACTUATORS

OPERATION:
8310-856 ACTUATOR FROM PUSH SIDE TO UNLOCK THE ELECTRIC STRIKE AND OPEN THE DOOR.

660PB REMOTE PUSH BUTTON TO UNLOCK THE 6111 FSE ELECTRIC STRIKE AND OPEN THE DOOR.

DATE DRAWN: 3-27-13
REVISION DATE: 3-27-13

copyright 2013

ALLEGION™

TITLE: LCN 4600 WITH 8310-856 ACT AND 660PB

DRAWING TYPE: WIRING DIAGRAM

DWG NO: 109464

DRAWN/CHECKED BY: B DOVE/ D BOLLENGIER

REV A

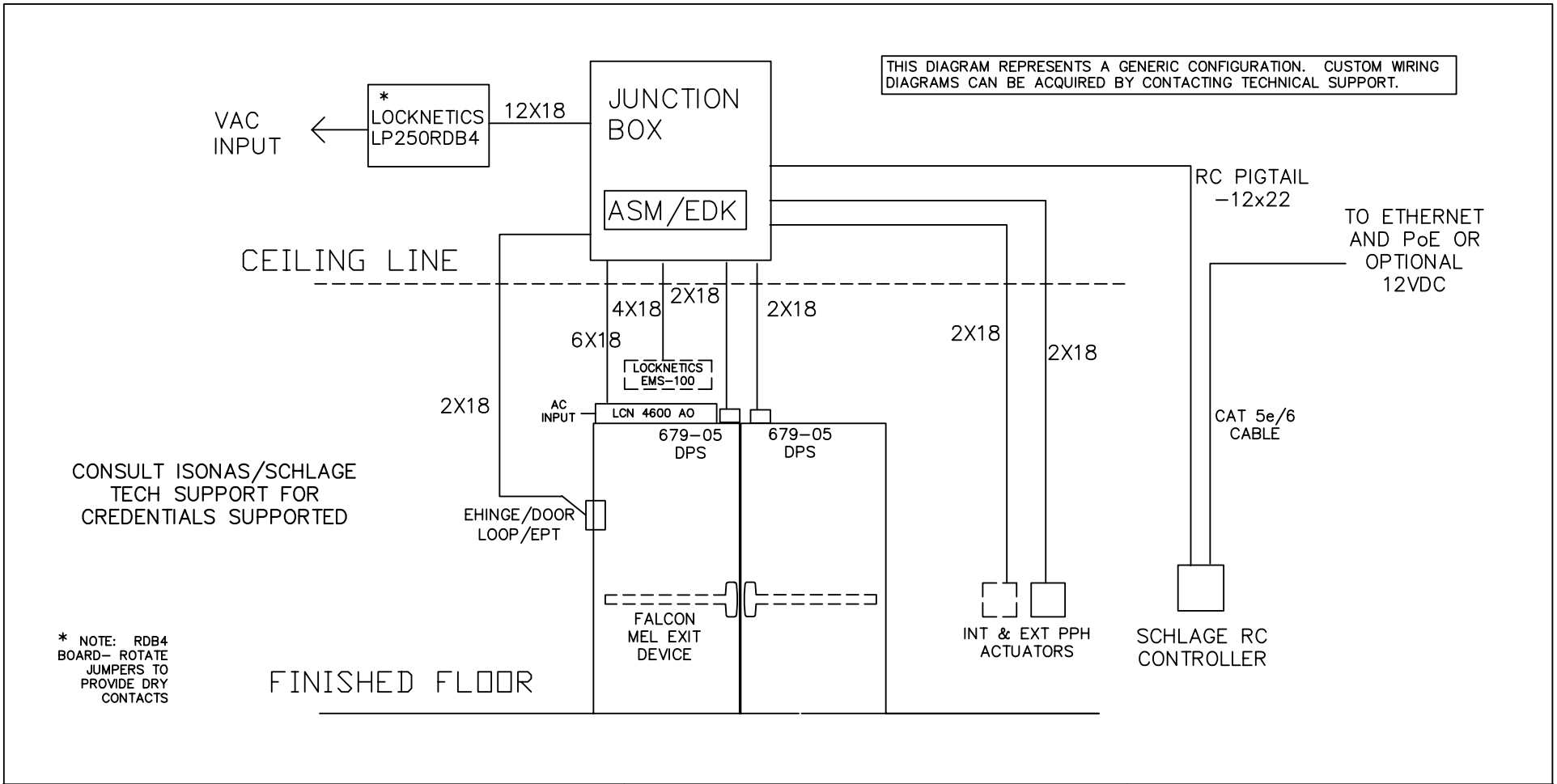

NOTES:
1) ALL LOW VOLTAGE WIRING TO BE STANDARD, MULTI-CONDUCTOR COLOR CODED WITHOUT SPLICES.

2) WIRING TO CONFORM TO APPLICABLE NATIONAL, STATE AND LOCAL ELECTRICAL CODES.

3) REFER TO SPECIFIC PRODUCT INSTALLATION INSTRUCTIONS FOR SPECIFIC WIRING REQUIREMENTS.

4) THIS DRAWING IS FOR GRAPHICAL REPRESENTATION OF PRODUCTS DETAILED IN THE HARDWARE SET ONLY.

5) * CONDUCTOR COUNT TO BE DETERMINED BY ACCESS CONTROL PANEL PROVIDER.

HARDWARE USED:
- SCHLAGE RC CONTROLLER
- SCHLAGE RC PIGTAIL
- SCHLAGE ASM/EDK MODULE
- LOCKNETICS EMS-100 MOTION SENSOR
- 1 FALCON MEL 24/25 EXIT DEVICES
- 2 DOOR LOOP OR EHINGE OR EPT
- LCN 4600 AO
- 2 LOCKNETICS PPH ACTUATORS
- LOCKNETICS LP250RDB4
- 2 679-05 DPS
- 1 12VDC DPDT RELAY
- JUNCTION BOX

OPERATION:
DOORS NORMALLY CLOSED AND LOCKED.

ENTRY BY VALID CREDENTIAL OR KEY OVERRIDE. CREDENTIAL SIGNALS MEL LATCH RETRACTION ON RHR LEAF PANIC DEVICE AND ENABLES EXTERIOR ACTUATOR. INTERIOR ACTUATOR ALWAYS ACTIVE.

EMS-100 MOTION SENSOR TO SHUNT DOOR FORCED ALARM.

CONFIRM PoE SOURCE SUFFICIENT FOR LOAD.

FREE EGRESS AT ALL TIMES.

DATE DRAWN: 09-09-20 | REVISION DATE: 3-2-22

ALLEGION™

TITLE: SCHLAGE RC CONTROLLER WITH MEL, AO, MOTION SENSOR, DPS PAIR OF DOORS

DRAWING TYPE: RISER DIAGRAM

DWG NO: 113740R

DRAWN/CHECKED BY: DOVE/TAMARCHENKO

REV B

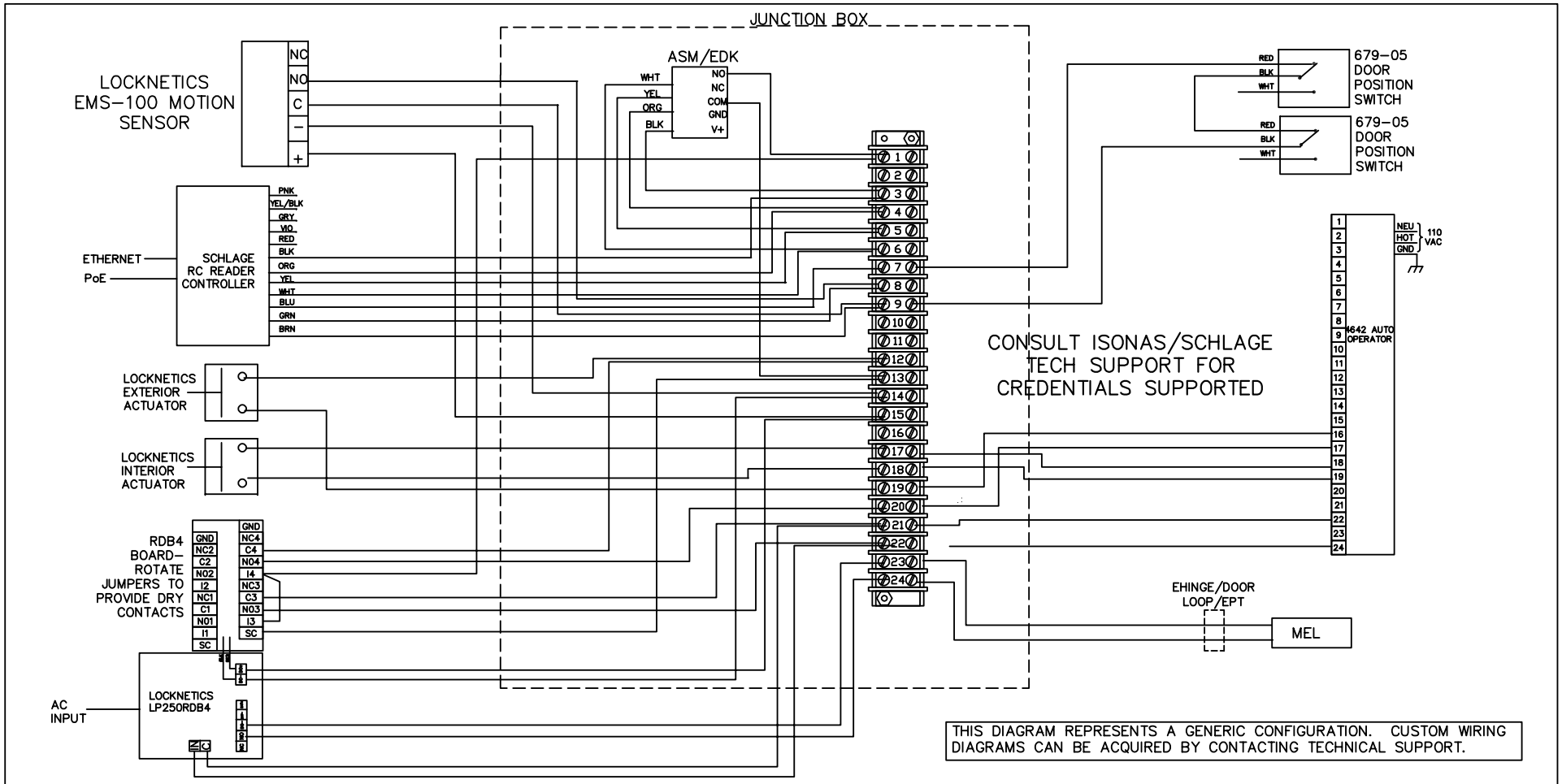

NOTES:
1) ALL LOW VOLTAGE WIRING TO BE STANDARD, MULTI-CONDUCTOR COLOR CODED WITHOUT SPLICES.

2) WIRING TO CONFORM TO APPLICABLE NATIONAL, STATE AND LOCAL ELECTRICAL CODES.

3) REFER TO SPECIFIC PRODUCT INSTALLATION INSTRUCTIONS FOR SPECIFIC WIRING REQUIREMENTS.

4) THIS DRAWING IS FOR GRAPHICAL REPRESENTATION OF PRODUCTS DETAILED IN THE HARDWARE SET ONLY.

5) * CONDUCTOR COUNT TO BE DETERMINED BY ACCESS CONTROL PANEL PROVIDER.

HARDWARE USED:
- SCHLAGE RC CONTROLLER
- SCHLAGE RC PIGTAIL
- SCHLAGE ASM/EDK MODULE
- LOCKNETICS EMS-100 MOTION SENSOR
- 1 FALCON MEL 24/25 EXIT DEVICES
- 2 DOOR LOOP OR EHINGE OR EPT
- LCN 4600 AO
- 2 LOCKNETICS PPH ACTUATORS
- LOCKNETICS LP250RDB4
- 2 679-05 DPS
- 1 12VDC DPDT RELAY
- JUNCTION BOX

OPERATION:
DOORS NORMALLY CLOSED AND LOCKED.

ENTRY BY VALID CREDENTIAL OR KEY OVERRIDE. CREDENTIAL SIGNALS MEL LATCH RETRACTION ON RHR LEAF PANIC DEVICE AND ENABLES EXTERIOR ACTUATOR. INTERIOR ACTUATOR ALWAYS ACTIVE.

EMS-100 MOTION SENSOR TO SHUNT DOOR FORCED ALARM.

CONFIRM PoE SOURCE SUFFICIENT FOR LOAD.

FREE EGRESS AT ALL TIMES.

DATE DRAWN: 09-09-20

REVISION DATE: 3-2-22

ALLEGION™

TITLE:
SCHLAGE RC CONTROLLER WITH MEL, AO, MOTION SENSOR, DPS PAIR OF DOORS

DRAWING TYPE: WIRING DIAGRAM

DWG NO: 113740W

DRAWN/CHECKED BY: DOVE/TAMARCHENKO

REV B

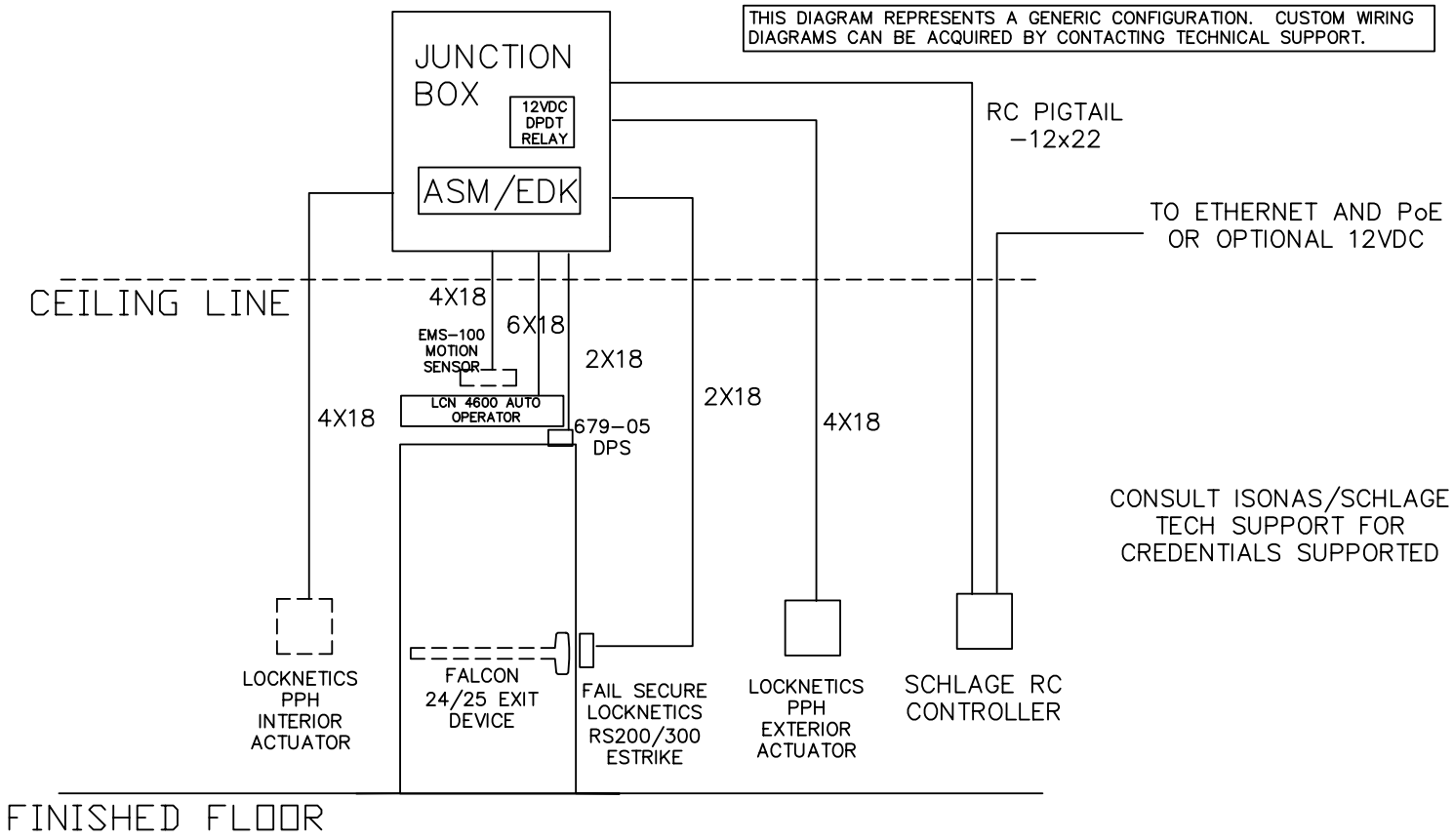

NOTES:
1) ALL LOW VOLTAGE WIRING TO BE STANDARD, MULTI-CONDUCTOR COLOR CODED WITHOUT SPLICES.

2) WIRING TO CONFORM TO APPLICABLE NATIONAL, STATE AND LOCAL ELECTRICAL CODES.

3) REFER TO SPECIFIC PRODUCT INSTALLATION INSTRUCTIONS FOR SPECIFIC WIRING REQUIREMENTS.

4) THIS DRAWING IS FOR GRAPHICAL REPRESENTATION OF PRODUCTS DETAILED IN THE HARDWARE SET ONLY.

5) * CONDUCTOR COUNT TO BE DETERMINED BY ACCESS CONTROL PANEL PROVIDER.

HARDWARE USED:
SCHLAGE RC CONTROLLER
SCHLAGE RC PIGTAIL
SCHLAGE ASM/EDK MODULE
LOCKNETICS RS200/300 ESTRIKE
LOCKNETICS EMS-100 MOTION SENSOR
SCHLAGE 679-05 DPS
12 VDC DPDT RELAY
LCN 4600 AUTO OPERATOR
2 LOCKNETICS PPH ACUTUATORS
JUNCTION BOX

OPERATION:
DOORS NORMALLY CLOSED AND LOCKED.

ENTRY BY VALID CREDENTIAL OR KEY OVERRIDE AND WILL ENABLE EXTERIOR ACTUATOR TO OPEN DOOR VIA AUTO OPERATOR.

INTERIOR ACTUATOR ALWAYS ACTIVE.

MOTION SENSOR TO SHUNT DOOR FORCED ALARM.

FREE EGRESS AT ALL TIMES.

DATE DRAWN: 10-15-20
REVISION DATE: 3-3-22

ALLEGION™

TITLE: SCHLAGE RC CONTROLLER, ESTRIKE AO, DPS, MOTION SENSOR, SINGLE DOOR

DRAWING TYPE: RISER DIAGRAM
DWG NO: 113752R
DRAWN/CHECKED BY: DOVE/TAMARCHENKO
REV B

THIS DIAGRAM REPRESENTS A GENERIC CONFIGURATION. CUSTOM WIRING DIAGRAMS CAN BE ACQUIRED BY CONTACTING TECHNICAL SUPPORT.

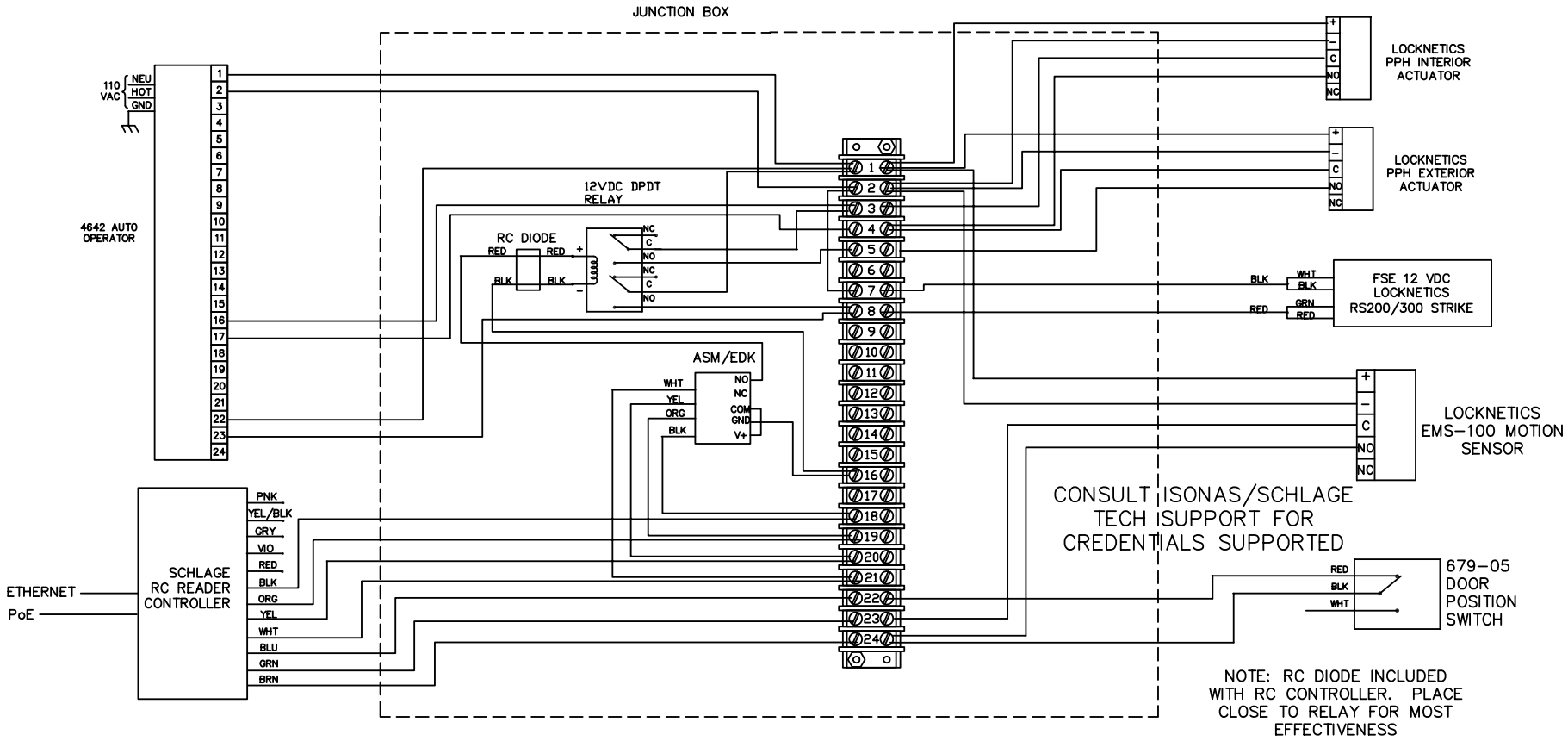

NOTES:
1) ALL LOW VOLTAGE WIRING TO BE STANDARD, MULTI-CONDUCTOR COLOR CODED WITHOUT SPLICES.

2) WIRING TO CONFORM TO APPLICABLE NATIONAL, STATE AND LOCAL ELECTRICAL CODES.

3) REFER TO SPECIFIC PRODUCT INSTALLATION INSTRUCTIONS FOR SPESCIFIC WIRING REQUIREMENTS.

4) THIS DRAWING IS FOR GRAPHICAL REPRESENTATION OF PRODUCTS DETAILED IN THE HARDWARE SET ONLY.

HARDWARE USED:

SCHLAGE RC CONTROLLER
SCHLAGE RC PIGTAIL
SCHLAGE ASM/EDK MODULE
LOCKNETICS RS200/300 ESTRIKE
LOCKNETICS EMS-100 MOTION SENSOR
SCHLAGE 679-05 DPS
12 VDC DPDT RELAY
LCN 4600 AUTO OPERATOR
2 LOCKNETICS PPH ACUTUATORS
JUNCTION BOX

OPERATION:
DOORS NORMALLY CLOSED AND LOCKED

ENTRY BY VALID CREDENTIAL OR KEY OVERRIDE AND WILL ENABLE EXTERIOR ACTUATOR TO OPEN DOOR VIA AUTO OPERATOR.

INTERIOR ACTUATOR ALWAYS ACTIVE.

MOTION SENSOR TO SHUNT DOOR FORCED ALARM

FREE EGRESS AT ALL TIMES

DATE DRAWN: 10-15-20

REVISION DATE: 3-3-22

ALLEGION™

TITLE: SCHLAGE RC CONTROLLER, ESTRIKE AO, DPS, MOTION SENSOR, SINGLE DOOR

DRAWING TYPE: WIRING DIAGRAM

DWG NO: 113752W

DRAWN/CHECKED BY: DOVE/TAMARCHENKO

REV B

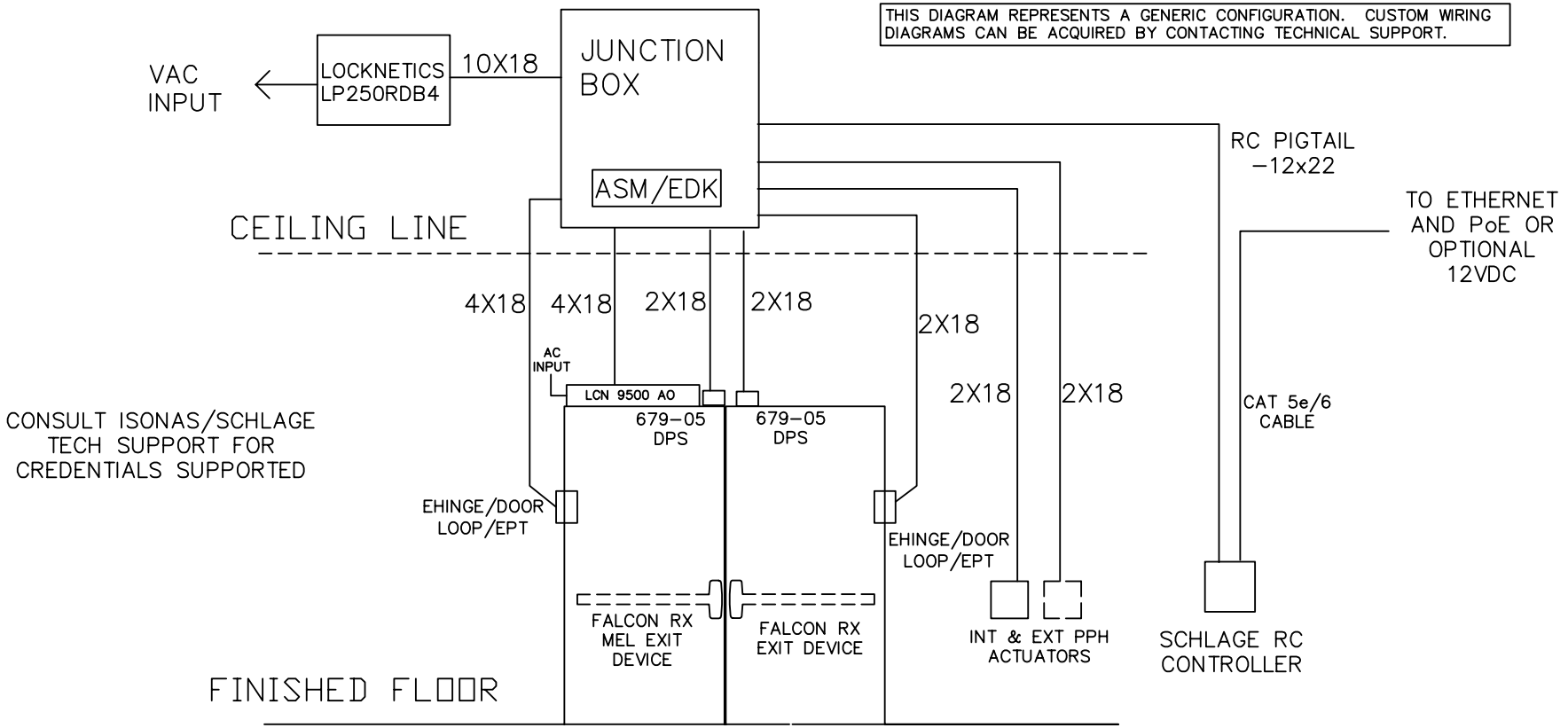

NOTES:
1) ALL LOW VOLTAGE WIRING TO BE STANDARD, MULTI-CONDUCTOR COLOR CODED WITHOUT SPLICES.

2) WIRING TO CONFORM TO APPLICABLE NATIONAL, STATE AND LOCAL ELECTRICAL CODES.

3) REFER TO SPECIFIC PRODUCT INSTALLATION INSTRUCTIONS FOR SPECIFIC WIRING REQUIREMENTS.

4) THIS DRAWING IS FOR GRAPHICAL REPRESENTATION OF PRODUCTS DETAILED IN THE HARDWARE SET ONLY.

5) * CONDUCTOR COUNT TO BE DETERMINED BY ACCESS CONTROL PANEL PROVIDER.

HARDWARE USED:
SCHLAGE RC CONTROLLER
SCHLAGE RC PIGTAIL
SCHLAGE ASM/EDK MODULE
1 FALCON RX MEL 24/25 EXIT DEVICE
1 FALCON RX 24/25 EXIT DEVICE
2 DOOR LOOP OR EHINGE OR EPT
LCN 9500 AO
2 LOCKNETICS PPH ACTUATORS
LOCKNETICS LP250RDB4
2 SCHLAGE 679-05 DPS
1 12 VDC DPDT RELAY
JUNCTION BOX

OPERATION:
DOORS NORMALLY CLOSED AND LOCKED.

ENTRY BY VALID CREDENTIAL OR KEY OVERRIDE. CREDENTIAL SIGNALS MEL LATCH RETRACTION, LHR LEAF, AND ENABLES EXTERIOR ACTUATOR. INTERIOR ACTUATOR ALWAYS ACTIVE.

RX SWITCHES IN EXIT DEVICES TO SHUNT DOOR FORCED ALARM.

CONFIRM PoE SOURCE SUFFICIENT FOR LOAD.

FREE EGRESS AT ALL TIMES.

DATE DRAWN: 10-20-20 REVISION DATE: 3-3-22

ALLEGION™

TITLE:
SCHLAGE RC CONTROLLER WITH RX MEL, RX, 9500 AO, DPS, LP250 PAIR OF DOORS

DRAWING TYPE: RISER DIAGRAM

DWG NO: 113768R

DRAWN/CHECKED BY: DOVE/TAMARCHENKO

REV B

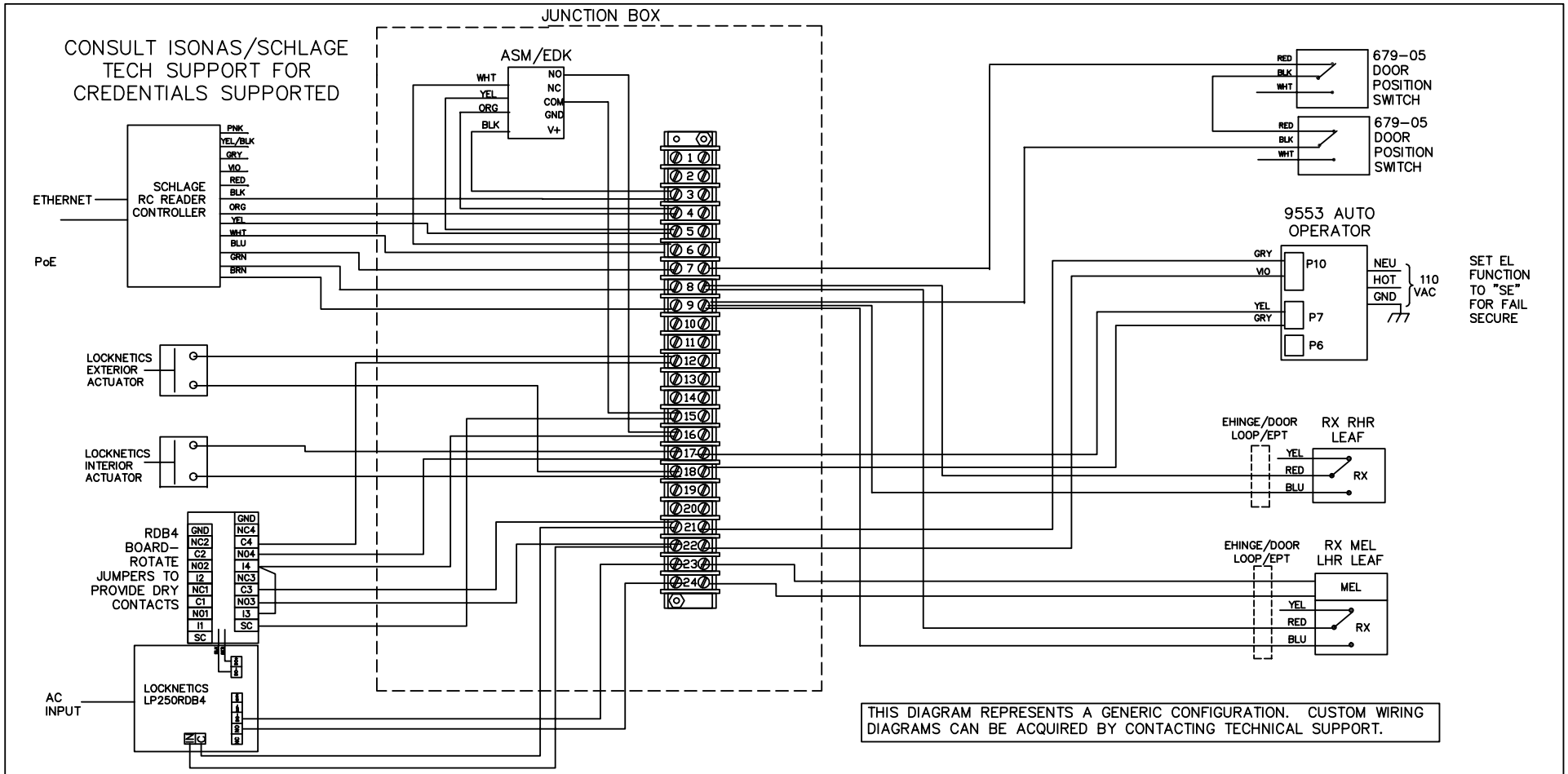

NOTES:
1) ALL LOW VOLTAGE WIRING TO BE STANDARD, MULTI-CONDUCTOR COLOR CODED WITHOUT SPLICES.

2) WIRING TO CONFORM TO APPLICABLE NATIONAL, STATE AND LOCAL ELECTRICAL CODES.

3) REFER TO SPECIFIC PRODUCT INSTALLATION INSTRUCTIONS FOR SPECIFIC WIRING REQUIREMENTS.

4) THIS DRAWING IS FOR GRAPHICAL REPRESENTATION OF PRODUCTS DETAILED IN THE HARDWARE SET ONLY.

5) * CONDUCTOR COUNT TO BE DETERMINED BY ACCESS CONTROL PANEL PROVIDER.

HARDWARE USED:
SCHLAGE RC CONTROLLER
SCHLAGE RC PIGTAIL
SCHLAGE ASM/EDK MODULE
1 FALCON RX MEL 24/25 EXIT DEVICE
1 FALCON RX 24/25 EXIT DEVICE
2 DOOR LOOP OR EHINGE OR EPT
LCN 9500 AO
2 LOCKNETICS PPH ACTUATORS
LOCKNETICS LP250RDB4
2 SCHLAGE 679-05 DPS
1 12 VDC DPDT RELAY
JUNCTION BOX

OPERATION:
DOORS NORMALLY CLOSED AND LOCKED.

ENTRY BY VALID CREDENTIAL OR KEY OVERRIDE. CREDENTIAL SIGNALS MEL LATCH RETRACTION, LHR LEAF, AND ENABLES EXTERIOR ACTUATOR. INTERIOR ACTUATOR ALWAYS ACTIVE.

RX SWITCHES IN EXIT DEVICES TO SHUNT DOOR FORCED ALARM.

CONFIRM PoE SOURCE SUFFICIENT FOR LOAD.

FREE EGRESS AT ALL TIMES.

DATE DRAWN: 10-20-20 | REVISION DATE: 3-3-22

ALLEGION™

TITLE:
SCHLAGE RC CONTROLLER WITH RX MEL, RX, 9500 AO, DPS, LP250 PAIR OF DOORS

DRAWING TYPE:	DWG NO:	REV
WIRING DIAGRAM	113768W	B
	DRAWN/CHECKED BY: DOVE/TAMARCHENKO	

THIS DIAGRAM REPRESENTS A GENERIC CONFIGURATION. CUSTOM WIRING DIAGRAMS CAN BE ACQUIRED BY CONTACTING TECHNICAL SUPPORT.

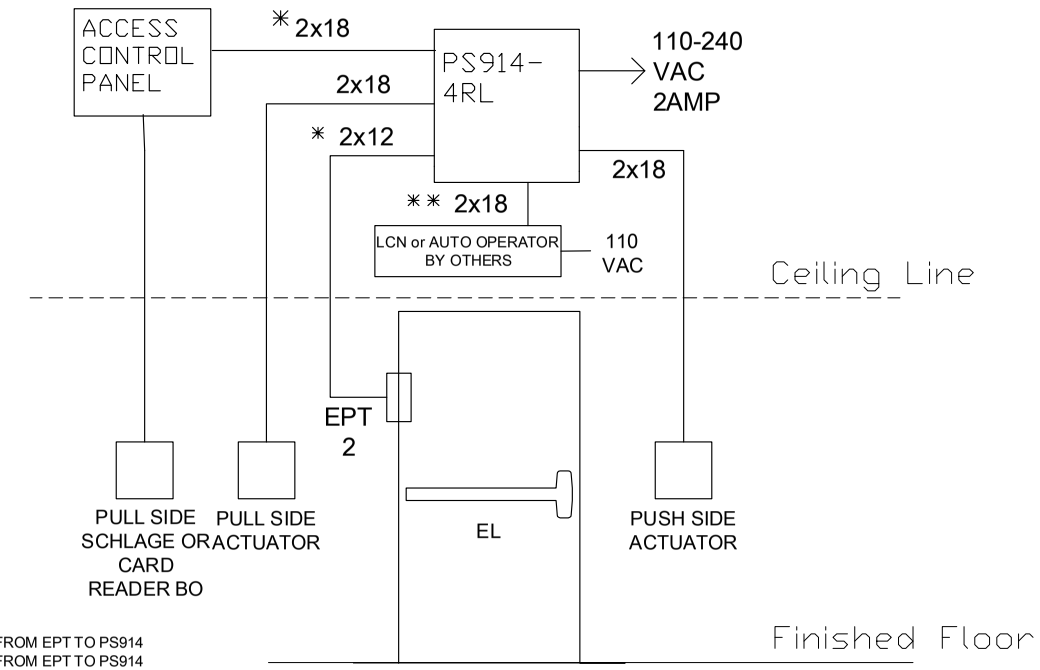

NOTE:
✳USE #12 GAUGE WIRE FOR DISTANCES UP TO 200' FROM EPT TO PS914
✳USE #14 GAUGE WIRE FOR DISTANCES UP TO 100' FROM EPT TO PS914
✳✳ADDITIONAL WIRING IS REQUIRED. SEE MANUFACTURER INSTALLATION INSTRUCTION

NOTES:
1) ALL LOW VOLTAGE WIRING TO BE STANDARD, MULTI-CONDUCTOR COLOR CODED WITHOUT SPLICES.

2) WIRING TO CONFORM TO APPLICABLE NATIONAL, STATE AND LOCAL ELECTRICAL CODES.

3) REFER TO SPECIFIC PRODUCT INSTALLATION INSTRUCTIONS FOR SPECIFIC WIRING REQUIREMENTS.

4) THIS DRAWING IS FOR GRAPHICAL REPRESENTATION OF PRODUCTS DETAILED IN THE HARDWARE SET ONLY.

5) ✳ CONDUCTOR COUNT TO BE DETERMINED BY ACCESS CONTROL PANEL PROVIDER.

HARDWARE USED:
- 1 VONDUPRIN OR FALCON EL PANIC DEVICE
- 1 SCHLAGE OR CARD READER BY OTHERS WITH ACP
- 2 ACTUATORS
- 1 PS914-4RL POWER SUPPLY
- 1 EPT POWER TRANSFER
- 1 LCN OR AUTO OPERATOR BY OTHERS

TYPE IR EL PANIC WITH AO

OPERATION:

PUSH SIDE ACTUATOR TO RETRACT THE ELECTRIC PANIC BAR AND OPEN THE DOOR.

PULL SIDE SCHLAGE OR CARD READER BO TO RETRACT THE ELECTRIC PANIC BAR AND ENABLE THE PULL SIDE ACTUATOR TO OPEN THE DOOR.

THIS CONFIGURATION REPRESENTS A NON FIRE RATED OPENING.

IN THIS EXAMPLE ALL WIRING CONNECTIONS ARE MADE IN THE PS914 ENCLOSURE.

DATE DRAWN: 3-20-13 | REVISION DATE: 07-03-17

ALLEGION™

TITLE: PS914-4RL AS AO WITH EL PANIC

DRAWING TYPE: RISER DIAGRAM

DWG NO: 109441

DRAWN/CHECKED BY: BRENDA DOVE

REV D

THIS DIAGRAM REPRESENTS A GENERIC CONFIGURATION. CUSTOM WIRING DIAGRAMS CAN BE ACQUIRED BY CONTACTING TECHNICAL SUPPORT.

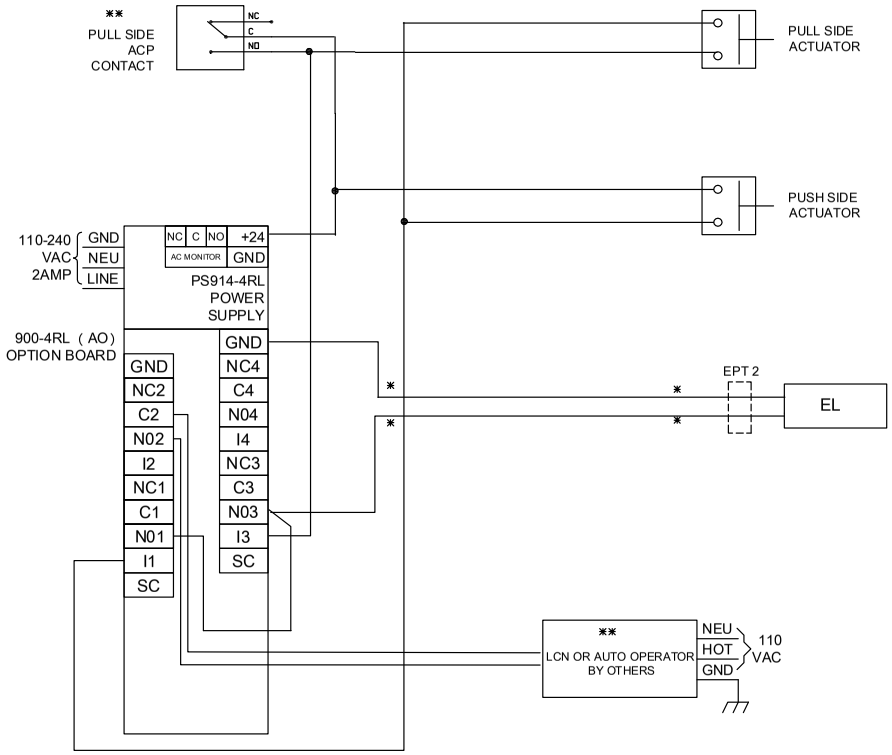

SET 900-4RL CARD:
SW2 PACK-SW1 OFF AND SW2 ON.
SW1 PACK-SW1 ON, SW2 OFF, SW3 AND SW4 OFF AND OTHER SWITCHES AS REQUIRED FOR INSTALLTION. SEE 900-4RL INSTALLATION INSTRUCTIONS FOR DETAILS.

PROGRAM C2 AND NO2 FOR DRY CONTACT.

SET ALL OTHER SWITCHES AS REQUIRED FOR INSTALLATION

NOTE:
*USE #12 GAUGE WIRE FOR DISTANCES UP TO 200' FROM EPT TO PS914
*USE #14 GAUGE WIRE FOR DISTANCES UP TO 100' FROM EPT TO PS914
**ADDITIONAL WIRING IS REQUIRED. SEE MANUFACTURER INSTALLATION INSTRUCTION

NOTES:
1) ALL LOW VOLTAGE WIRING TO BE STANDARD, MULTI-CONDUCTOR COLOR CODED WITHOUT SPLICES.

2) WIRING TO CONFORM TO APPLICABLE NATIONAL, STATE AND LOCAL ELECTRICAL CODES.

3) REFER TO SPECIFIC PRODUCT INSTALLATION INSTRUCTIONS FOR SPECIFIC WIRING REQUIREMENTS.

4) THIS DRAWING IS FOR GRAPHICAL REPRESENTATION OF PRODUCTS DETAILED IN THE HARDWARE SET ONLY.

5) * CONDUCTOR COUNT TO BE DETERMINED BY ACCESS CONTROL PANEL PROVIDER.

HARDWARE USED:
1 VONDUPRIN OR FALCON EL PANIC DEVICE

1 SCHLAGE OR CARD READER BY OTHERS WITH ACP

2 ACTUATORS

1 PS914-4RL POWER SUPPLY

1 EPT POWER TRANSFER

1 LCN OR AUTO OPERATOR BY OTHERS

TYPE IR EL PANIC WITH AO

OPERATION:

PUSH SIDE ACTUATOR TO RETRACT THE ELECTRIC PANIC BAR AND OPEN THE DOOR.

PULL SIDE SCHLAGE OR CARD READER BO TO RETRACT THE ELECTRIC PANIC BAR AND ENABLE THE PULL SIDE ACTUATOR TO OPEN THE DOOR.

THIS CONFIGURATION REPRESENTS A NON FIRE RATED OPENING.

IN THIS EXAMPLE ALL WIRING CONNECTIONS ARE MADE IN THE PS914 ENCLOSURE.

DATE DRAWN: 3-20-13

REVISION DATE: 07-03-17

ALLEGION™

TITLE: PS902-4RL AS AO WITH QEL PANIC

DRAWING TYPE: WIRING DIAGRAM

DWG NO: 021618-2R

DRAWN/CHECKED BY: B DOVE/ B DYE

REV A

THIS DIAGRAM REPRESENTS A GENERIC CONFIGURATION. CUSTOM WIRING DIAGRAMS CAN BE ACQUIRED BY CONTACTING TECHNICAL SUPPORT.

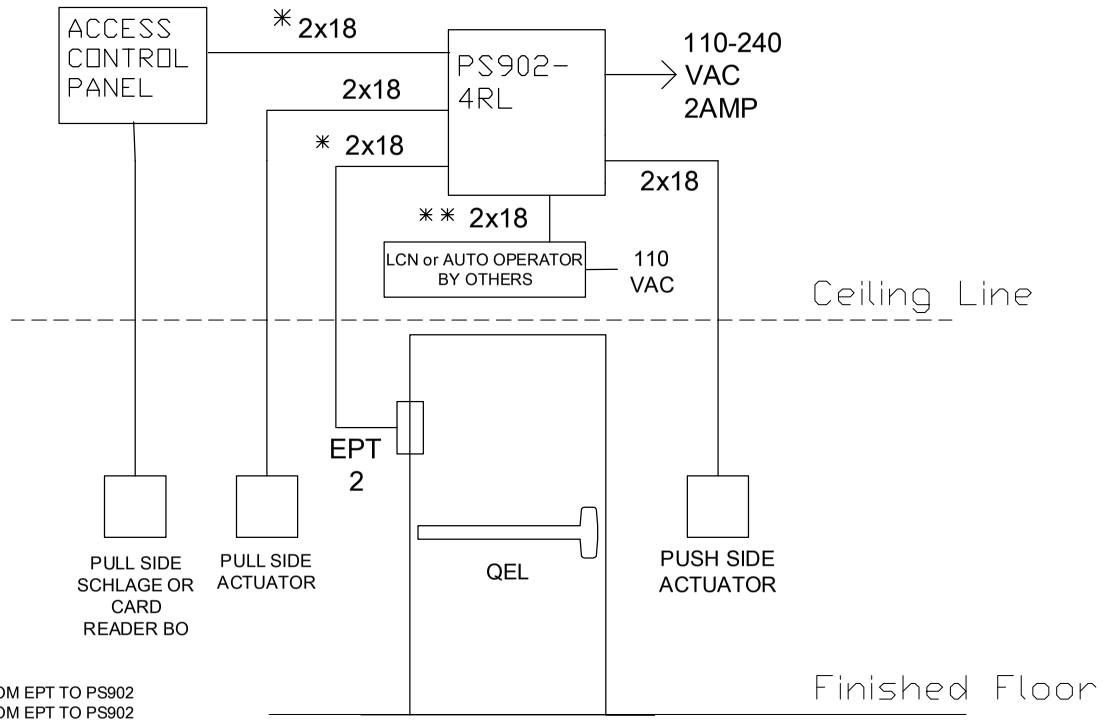

NOTE:
✳USE #18 GAUGE WIRE FOR DISTANCES UP TO 200' FROM EPT TO PS902
✳USE #14 GAUGE WIRE FOR DISTANCES UP TO 500' FROM EPT TO PS902
✳✳ADDITIONAL WIRING IS REQUIRED. SEE MANUFACTURER INSTALLATION INSTRUCTION

NOTES:
1) ALL LOW VOLTAGE WIRING TO BE STANDARD, MULTI-CONDUCTOR COLOR CODED WITHOUT SPLICES.

2) WIRING TO CONFORM TO APPLICABLE NATIONAL, STATE AND LOCAL ELECTRICAL CODES.

3) REFER TO SPECIFIC PRODUCT INSTALLATION INSTRUCTIONS FOR SPECIFIC WIRING REQUIREMENTS.

4) THIS DRAWING IS FOR GRAPHICAL REPRESENTATION OF PRODUCTS DETAILED IN THE HARDWARE SET ONLY.

5) ✳ CONDUCTOR COUNT TO BE DETERMINED BY ACCESS CONTROL PANEL PROVIDER.

HARDWARE USED:
- 1 VONDUPRIN QEL PANIC DEVICE
- 1 SCHLAGE OR CARD READER BY OTHERS WITH ACP
- 2 ACTUATORS
- 1 PS902-4RL POWER SUPPLY
- 1 EPT POWER TRANSFER
- 1 LCN OR AUTO OPERATOR BY OTHERS

TYPE QEL PANIC WITH AO

OPERATION:

PUSH SIDE ACTUATOR TO RETRACT THE QUIETELECTRIC PANIC BAR AND OPEN THE DOOR.

PULL SIDE SCHLAGE OR CARD READER BO TO RETRACT THE ELECTRIC PANIC BAR AND ENABLE THE PULL SIDE ACTUATOR TO OPEN THE DOOR.

THIS CONFIGURATION REPRESENTS A NON FIRE RATED OPENING.

IN THIS EXAMPLE ALL WIRING CONNECTIONS ARE MADE IN THE PS902 ENCLOSURE.

DATE DRAWN: 02-16-18 | REVISION DATE: 02-16-18

ALLEGION™

TITLE: PS902-4RL AS AO WITH QEL PANIC

DRAWING TYPE: RISER DIAGRAM

DWG NO: 112132R

DRAWN/CHECKED BY: BRENDA DOVE

REV A

THIS DIAGRAM REPRESENTS A GENERIC CONFIGURATION. CUSTOM WIRING DIAGRAMS CAN BE ACQUIRED BY CONTACTING TECHNICAL SUPPORT.

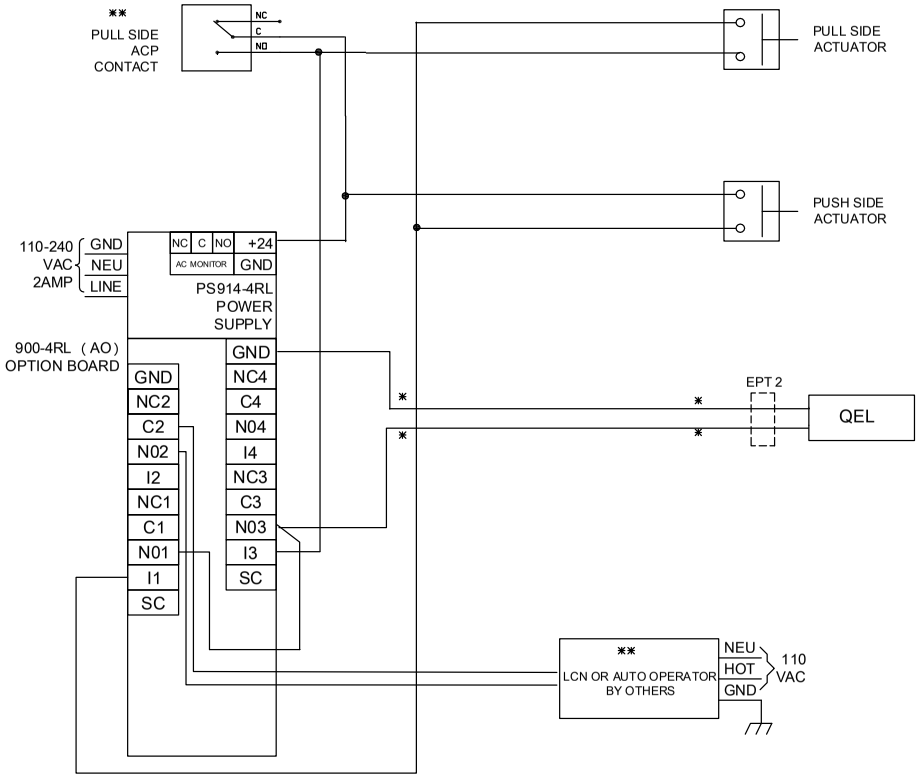

SET 900-4RL CARD:
SW2 PACK-SW1 OFF AND SW2 ON.
SW1 PACK-SW1 ON, SW2 OFF, SW3 AND SW4 OFF AND OTHER SWITCHES AS REQUIRED FOR INSTALLTION. SEE 900-4RL INSTALLATION INSTRUCTIONS FOR DETAILS.

PROGRAM C2 AND NO2 FOR DRY CONTACT.

SET ALL OTHER SWITCHES AS REQUIRED FOR INSTALLATION

NOTE:
*USE #18 GAUGE WIRE FOR DISTANCES UP TO 200' FROM EPT TO PS902
*USE #14 GAUGE WIRE FOR DISTANCES UP TO 500' FROM EPT TO PS902
**ADDITIONAL WIRING IS REQUIRED. SEE MANUFACTURER INSTALLATION INSTRUCTION

NOTES:
1) ALL LOW VOLTAGE WIRING TO BE STANDARD, MULTI-CONDUCTOR COLOR CODED WITHOUT SPLICES.

2) WIRING TO CONFORM TO APPLICABLE NATIONAL, STATE AND LOCAL ELECTRICAL CODES.

3) REFER TO SPECIFIC PRODUCT INSTALLATION INSTRUCTIONS FOR SPECIFIC WIRING REQUIREMENTS.

4) THIS DRAWING IS FOR GRAPHICAL REPRESENTATION OF PRODUCTS DETAILED IN THE HARDWARE SET ONLY.

5) * CONDUCTOR COUNT TO BE DETERMINED BY ACCESS CONTROL PANEL PROVIDER.

HARDWARE USED:
- 1 VONDUPRIN QEL PANIC DEVICE
- 1 SCHLAGE OR CARD READER BY OTHERS WITH ACP
- 2 ACTUATORS
- 1 PS902-4RL POWER SUPPLY
- 1 EPT POWER TRANSFER
- 1 LCN OR AUTO OPERATOR BY OTHERS

TYPE: QEL PANIC WITH AO

OPERATION:

PUSH SIDE ACTUATOR TO RETRACT THE QUIET ELECTRIC PANIC BAR AND OPEN THE DOOR.

PULL SIDE SCHLAGE OR CARD READER BO TO RETRACT THE ELECTRIC PANIC BAR AND ENABLE THE PULL SIDE ACTUATOR TO OPEN THE DOOR.

THIS CONFIGURATION REPRESENTS A NON FIRE RATED OPENING.

IN THIS EXAMPLE ALL WIRING CONNECTIONS ARE MADE IN THE PS902 ENCLOSURE.

DATE DRAWN: 02-16-18
REVISION DATE: 02-16-18

ALLEGION™

TITLE: PS902-4RL AS AO WITH QEL PANIC

DRAWING TYPE: WIRING DIAGRAM
DWG NO: 112132W
DRAWN/CHECKED BY: B DOVE
REV: A

THIS DIAGRAM REPRESENTS A GENERIC CONFIGURATION. CUSTOM WIRING DIAGRAMS CAN BE ACQUIRED BY CONTACTING TECHNICAL SUPPORT.

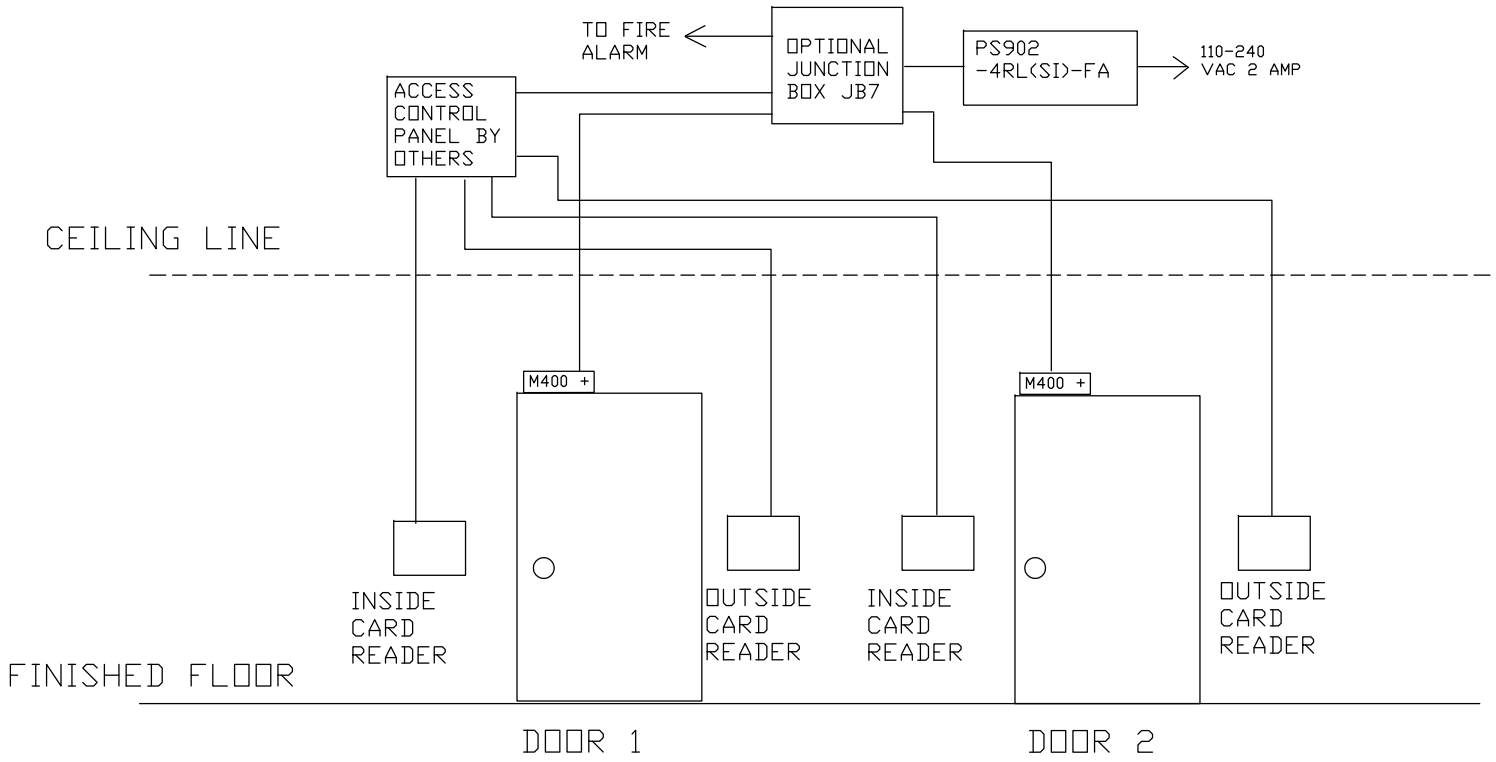

NOTES:
1) ALL LOW VOLTAGE WIRING TO BE STANDARD, MULTI-CONDUCTOR COLOR CODED WITHOUT SPLICES.

2) WIRING TO CONFORM TO APPLICABLE NATIONAL, STATE AND LOCAL ELECTRICAL CODES.

3) REFER TO SPECIFIC PRODUCT INSTALLATION INSTRUCTIONS FOR SPECIFIC WIRING REQUIREMENTS.

4) THIS DRAWING IS FOR GRAPHICAL REPRESENTATION OF PRODUCTS DETAILED IN THE HARDWARE SET ONLY.

5) ADDITIONAL WIRING WILL BE REQUIRED FROM ACP THAT IS NOT SHOWN HERE. CONSULT PROVIDER FOR DETAILS.

HARDWARE USED:
1 - PS902-4RL-FA
2 - M400 PLUS MAGLOCK
4 - CARDREADER 7 ACCESS CONTROL PANEL BY OTHERS
1 - FIRE ALARM CONTACT BY OTHERS
1 - OPTIONAL JUNCION BOX, JB7 BY VON DUPRIN

TYPE
2 DOOR SECURITY INTERLOCK

OPERATION:
DOOR 1 & 2 SHOWN LOCKED & CLOSED.

UNLOCKING DOOR 1 PREVENTS DOOR 2 FROM UNLOCKING UNTIL DOOR 1 IS CLOSED.

UNLOCKING DOOR 2 PREVENTS DOOR 1 FROM UNLOCKING UNTIL DOOR 2 IS CLOSED

FIRE ALARM UNLOCKS BOTH DOORS.

DATE DRAWN: 03-26-13	REVISION DATE: 04-16-14
DRAWN BY: B DOVE	APPROVED BY: MH

ALLEGION™

TITLE:
2 DOORS PS902-4RL(SI)-fa X 2 M400 PLUS MAGLOCKS X 2 CARD READERS

DRAWING TYPE: RISER

DWG NO: 104967

DRAWN/CHECKED BY: B DOVE

REV D

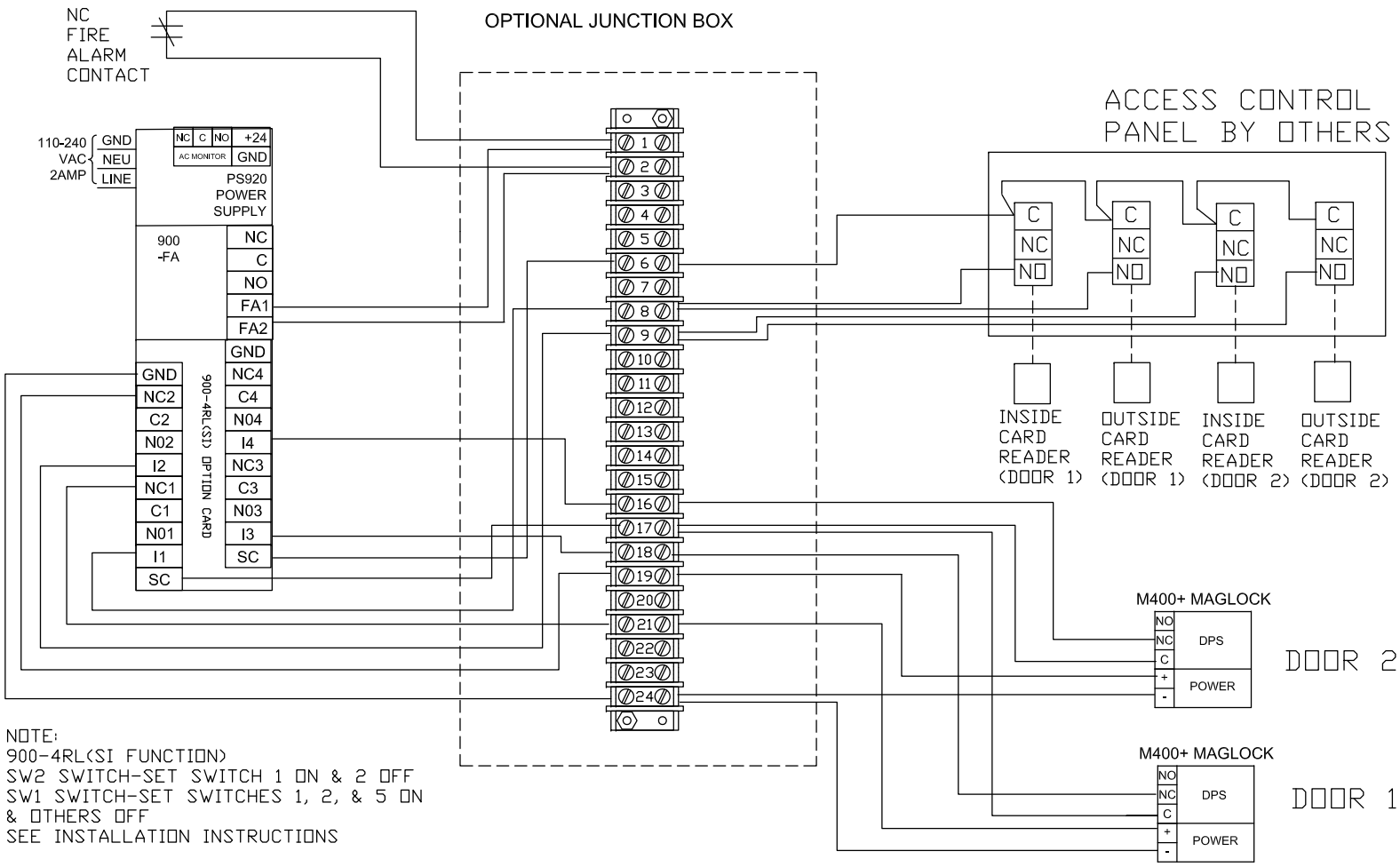

NOTE:
900-4RL(SI FUNCTION)
SW2 SWITCH-SET SWITCH 1 ON & 2 OFF
SW1 SWITCH-SET SWITCHES 1, 2, & 5 ON
& OTHERS OFF
SEE INSTALLATION INSTRUCTIONS

THIS DIAGRAM REPRESENTS A GENERIC CONFIGURATION. CUSTOM WIRING DIAGRAMS CAN BE ACQUIRED BY CONTACTING TECHNICAL SUPPORT.

NOTES:
1) ALL LOW VOLTAGE WIRING TO BE STANDARD, MULTI-CONDUCTOR COLOR CODED WITHOUT SPLICES.

2) WIRING TO CONFORM TO APPLICABLE NATIONAL, STATE AND LOCAL ELECTRICAL CODES.

3) REFER TO SPECIFIC PRODUCT INSTALLATION INSTRUCTIONS FOR SPECIFIC WIRING REQUIREMENTS.

4) THIS DRAWING IS FOR GRAPHICAL REPRESENTATION OF PRODUCTS DETAILED IN THE HARDWARE SET ONLY.

5) ADDITIONAL WIRING WILL BE REQUIRED FROM ACP THAT IS NOT SHOWN HERE. CONSULT PROVIDER FOR DETAILS.

HARDWARE USED:
1 - PS902-4RL-FA
2 - M400 PLUS MAGLOCK
4 - CARDREADER 7 ACCESS CONTROL PANEL BY OTHERS
1 - FIRE ALARM CONTACT BY OTHERS
1 - OPTIONAL JUNCION BOX, JB7 BY VON DUPRIN

TYPE
2 DOOR SECURITY INTERLOCK

OPERATION:
DOOR 1 & 2 SHOWN LOCKED & CLOSED.

UNLOCKING DOOR 1 PREVENTS DOOR 2 FROM UNLOCKING UNTIL DOOR 1 IS CLOSED.

UNLOCKING DOOR 2 PREVENTS DOOR 1 FROM UNLOCKING UNTIL DOOR 2 IS CLOSED

FIRE ALARM UNLOCKS BOTH DOORS.

DATE DRAWN: 03-26-13	REVISION DATE: 04-16-14
DRAWN BY: B DOVE	APPROVED BY: MH

ALLEGION™

TITLE:
2 DOORS PS902-4RL(SI)-fa X 2 M400 PLUS MAGLOCKS X 2 CARD READERS

DRAWING TYPE: WIRING	DWG NO: 104967	REV D
	DRAWN/CHECKED BY: B DOVE	

THIS DIAGRAM REPRESENTS A GENERIC CONFIGURATION. CUSTOM WIRING DIAGRAMS CAN BE ACQUIRED BY CONTACTING TECHNICAL SUPPORT.

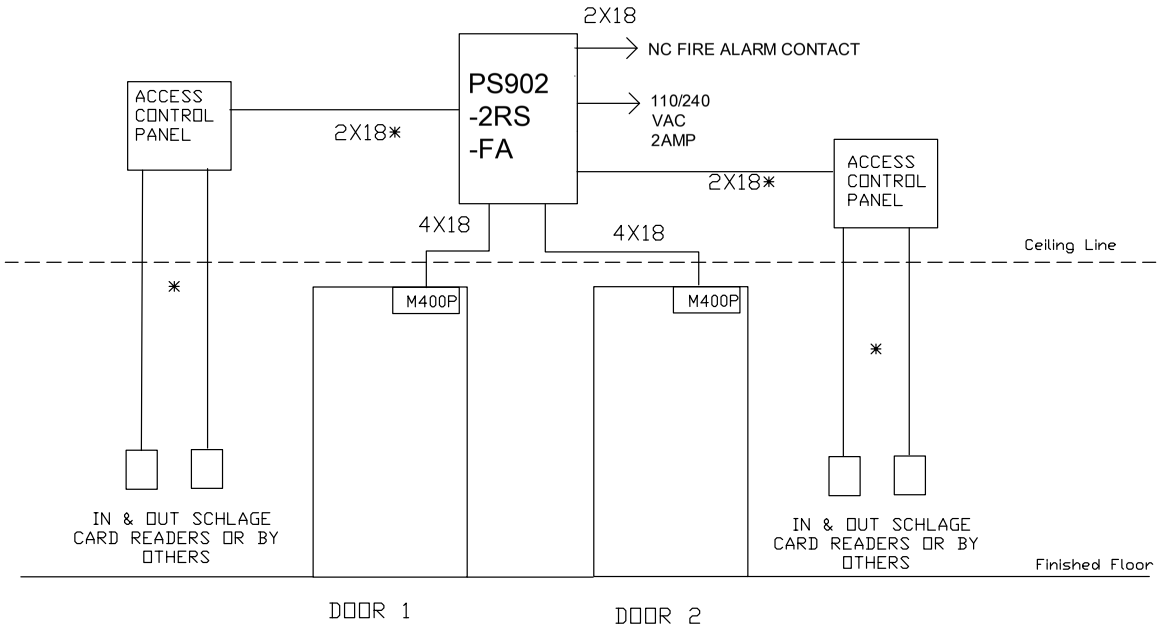

VERIFY OPERATION
ACCEPTABLE TO LOCAL AHJ.

NOTES:
1) ALL LOW VOLTAGE WIRING TO BE STANDARD, MULTI-CONDUCTOR COLOR CODED WITHOUT SPLICES.

2) WIRING TO CONFORM TO APPLICABLE NATIONAL, STATE AND LOCAL ELECTRICAL CODES.

3) REFER TO SPECIFIC PRODUCT INSTALLATION INSTRUCTIONS FOR SPECIFIC WIRING REQUIREMENTS.

4) THIS DRAWING IS FOR GRAPHICAL REPRESENTATION OF PRODUCTS DETAILED IN THE HARDWARE SET ONLY.

5) * CONDUCTOR COUNT TO BE DETERMINED BY ACCESS CONTROL PANEL PROVIDER.

Hardware Used:

2 M400P MAGNETIC LOCKS

PS902-2RS-FA POWER SUPPLY

4 SCHLAGE CARD READERS OR BY OTHERS AND ACP

FIRE ALARM CONTACT BY OTHERS

Type
SECURITY INTERLOCK
2 DOOR

OPERATION:

SECURITY INTERLOCK - BOTH DOORS NORMALLY LOCKED. PRESENTING A VALID CREDENTIAL TO THE CARD READERS WILL RELEASE DOOR IF OTHER DOOR IS CLOSED AND LOCKED.

OPPOSITE DOOR REMAINS LOCKED AS LONG AS OTHER DOOR REMAINS UNLOCKED.

IN THIS EXAMPLE ALL WIRING CONNECTIONS ARE MADE IN PS902 ENCLOSURE.

FIRE ALARM TO RELEASE BOTH M490 MAG LOCKS.

Date Drawn:	Revision Date:
3-13-13	07-03-17

ALLEGION™

TITLE: 2 Door PS902-2RS-FA x 2 M400 Plus Maglocks x 4 Card Readers

DRAWING TYPE:	DWG NO: 109438	REV
RISER	DRAWN/CHECKED BY: B DOVE/ B DYE	C

THIS DIAGRAM REPRESENTS A GENERIC CONFIGURATION. CUSTOM WIRING DIAGRAMS CAN BE ACQUIRED BY CONTACTING TECHNICAL SUPPORT.

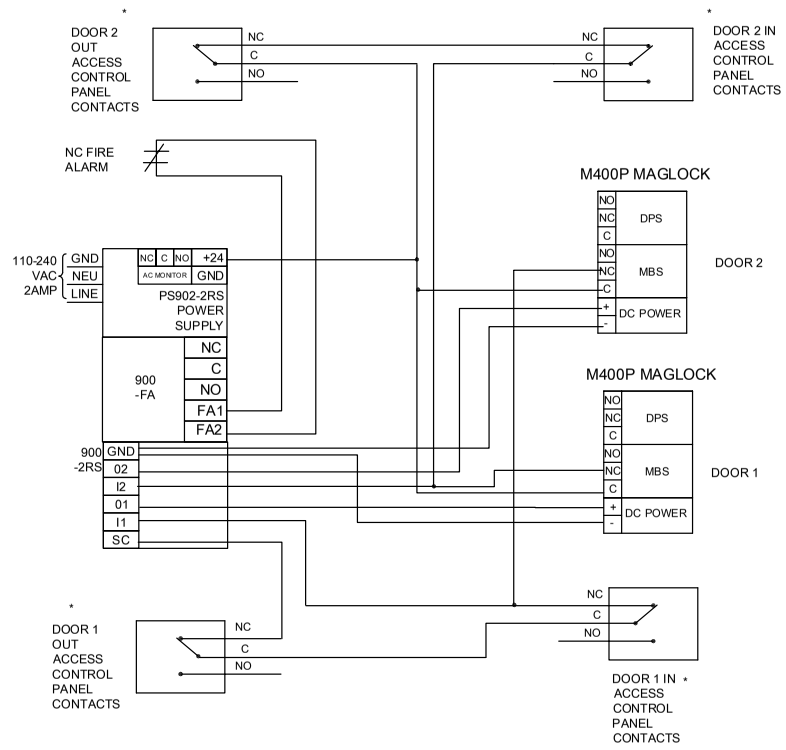

VERIFY OPERATION ACCEPTABLE TO LOCAL AHJ.

NOTES:
1) ALL LOW VOLTAGE WIRING TO BE STANDARD, MULTI-CONDUCTOR COLOR CODED WITHOUT SPLICES.

2) WIRING TO CONFORM TO APPLICABLE NATIONAL, STATE AND LOCAL ELECTRICAL CODES.

3) REFER TO SPECIFIC PRODUCT INSTALLATION INSTRUCTIONS FOR SPECIFIC WIRING REQUIREMENTS.

4) THIS DRAWING IS FOR GRAPHICAL REPRESENTATION OF PRODUCTS DETAILED IN THE HARDWARE SET ONLY.

5) * CONDUCTOR COUNT TO BE DETERMINED BY ACCESS CONTROL PANEL PROVIDER.

Hardware Used:

2 M400P MAGNETIC LOCKS

PS902-2RS-FA POWER SUPPLY

4 SCHLAGE CARD READERS OR BY OTHERS WITH ACP

FIRE ALARM CONTACT BY OTHERS

Type: SECURITY INTERLOCK 2 DOOR

OPERATION:

SECURITY INTERLOCK - BOTH DOORS NORMALLY LOCKED. PRESENTING A VALID CREDENTIAL TO THE CARD READERS WILL RELEASE DOOR IF OTHER DOOR IS CLOSED AND LOCKED.

OPPOSITE DOOR REMAINS LOCKED AS LONG AS OTHER DOOR REMAINS UNLOCKED.

IN THIS EXAMPLE ALL WIRING CONNECTIONS ARE MADE IN PS902 ENCLOSURE.

FIRE ALARM TO RELEASE BOTH M490 MAG LOCKS.

Date Drawn: 3-13-13

Revision Date: 07-03-17

ALLEGION™

TITLE: 2 Door PS902-2RS-FA x 2 M400 Plus Maglocks x 4 Card Readers

DRAWING TYPE: WIRING DIAGRAM

DWG NO: 109438

DRAWN/CHECKED BY: B DOVE/ B DYE

REV: C

THIS DIAGRAM REPRESENTS A GENERIC CONFIGURATION. CUSTOM WIRING DIAGRAMS CAN BE ACQUIRED BY CONTACTING TECHNICAL SUPPORT.

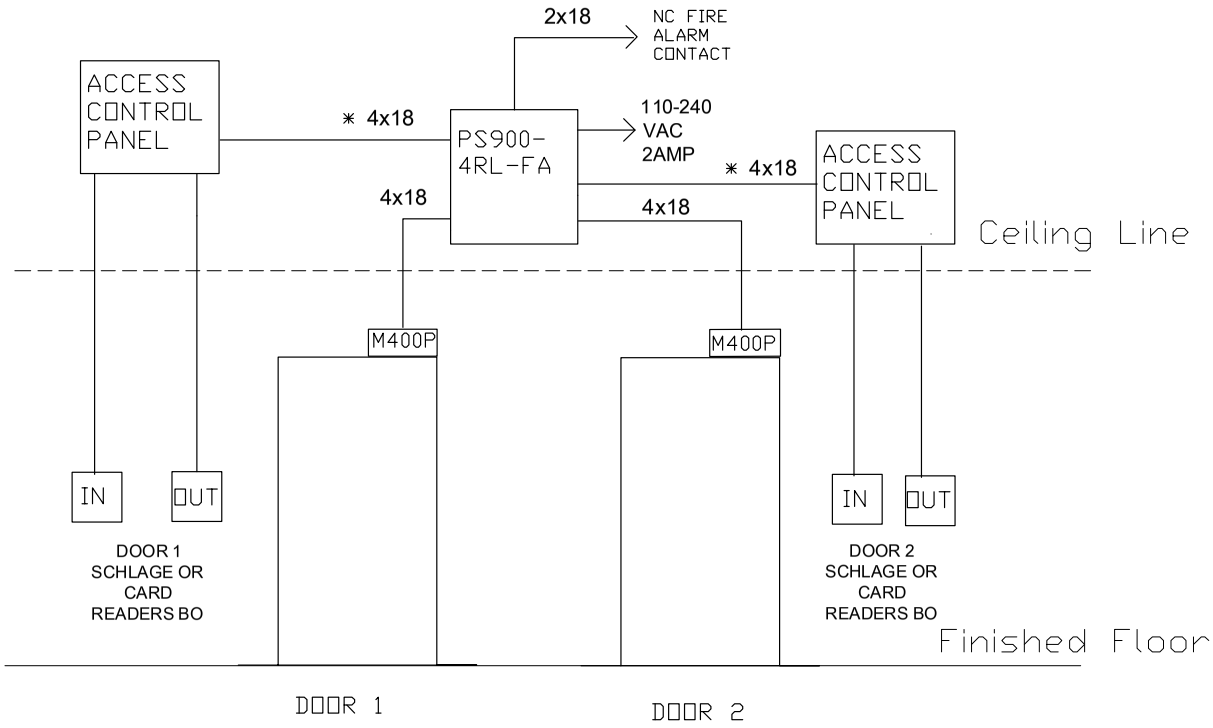

NOTES:

SET SW2 SWITCHES 1 ON AND 2 OFF TO CONFIG 900-4RL AS SI. SET SW1 SWITCHES AS REQUIRED FOR PARTICULAR INSTALLATION.

* ADDITIONAL CONDUCTORS MAY BE REQUIRED. CONSULT MANUFACTURERS INSTALLATION INSTRUCTIONS FOR FURTHER DETAILS.

CONFIRM HARDWARE AND OPERATION ACCEPTABLE TO LOCAL AHJ.

NOTES:
1) ALL LOW VOLTAGE WIRING TO BE STANDARD, MULTI-CONDUCTOR COLOR CODED WITHOUT SPLICES.

2) WIRING TO CONFORM TO APPLICABLE NATIONAL, STATE AND LOCAL ELECTRICAL CODES.

3) REFER TO SPECIFIC PRODUCT INSTALLATION INSTRUCTIONS FOR SPECIFIC WIRING REQUIREMENTS.

4) THIS DRAWING IS FOR GRAPHICAL REPRESENTATION OF PRODUCTS DETAILED IN THE HARDWARE SET ONLY.

5) * CONDUCTOR COUNT TO BE DETERMINED BY ACCESS CONTROL PANEL PROVIDER.

HARDWARE USED:

2 M400P MAG LOCKS

4 SCHLAGE OR CARD READER BY OTHERS WITH ACP

1 PS900-4RL-FA

FIRE ALARM CONTACT BY OTHERS

TYPE 2 DOOR SECURITY INTERLOCK WITH ACCESS CONTROL

OPERATION:

BOTH DOORS NORMALLY LOCKED. CARD READER TO OPEN DOOR ONLY IF OTHER DOOR IS CLOSED AND LOCKED.

NOTE, OPPOSITE DOOR WILL REMAIN LOCKED AS LONG AS OTHER DOOR IS UNLOCKED.

FIRE ALARM TO RELEASE BOTH M490 MAG LOCKS.

IN THIS EXAMPLE ALL WIRING CONNECTIONS ARE MADE IN THE PS900 ENCLOSURE.

DATE DRAWN: 3-21-13

REVISION DATE: 07-03-17

ALLEGION™

TITLE: PS900-4RL-FA SECURITY INTERLOCK WITH M400P MAG LOCKS

DRAWING TYPE: RISER DIAGRAM

DWG NO: 109442

DRAWN/CHECKED BY: B DOVE/B DYE

REV. C

THIS DIAGRAM REPRESENTS A GENERIC CONFIGURATION. CUSTOM WIRING DIAGRAMS CAN BE ACQUIRED BY CONTACTING TECHNICAL SUPPORT.

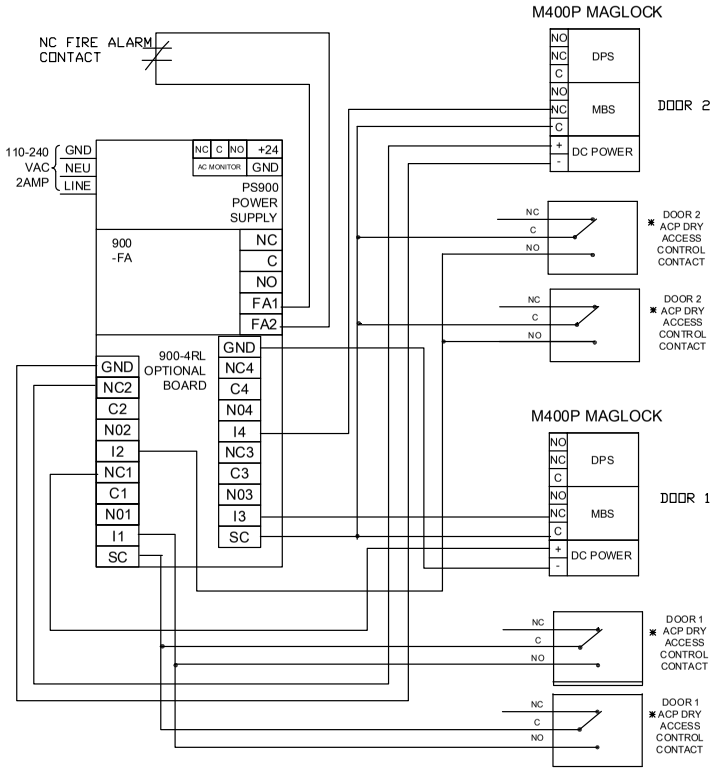

NOTES:

SET SW2 SWITCHES 1 ON AND 2 OFF TO CONFIG 900-4RL AS SI.
SET SW1 SWITCHES AS REQUIRED FOR PARTICULAR INSTALLATION.

* ADDITIONAL CONDUCTORS MAY BE REQUIRED. CONSULT MANUFACTURERS INSTALLATION INSTRUCTIONS FOR FURTHER DETAILS.

CONFIRM HARDWARE AND OPERATION ACCEPTABLE TO LOCAL AHJ.

NOTES:
1) ALL LOW VOLTAGE WIRING TO BE STANDARD, MULTI-CONDUCTOR COLOR CODED WITHOUT SPLICES.

2) WIRING TO CONFORM TO APPLICABLE NATIONAL, STATE AND LOCAL ELECTRICAL CODES.

3) REFER TO SPECIFIC PRODUCT INSTALLATION INSTRUCTIONS FOR SPECIFIC WIRING REQUIREMENTS.

4) THIS DRAWING IS FOR GRAPHICAL REPRESENTATION OF PRODUCTS DETAILED IN THE HARDWARE SET ONLY.

5) * CONDUCTOR COUNT TO BE DETERMINED BY ACCESS CONTROL PANEL PROVIDER.

HARDWARE USED:

2 M400P MAG LOCKS

4 SCHLAGE OR CARD READER BY OTHERS WITH ACP

1 PS900-4RL-FA

FIRE ALARM CONTACT BY OTHERS

TYPE 2 DOOR SECURITY INTERLOCK WITH ACCESS CONTROL

OPERATION:

BOTH DOORS NORMALLY LOCKED. CARD READER TO OPEN DOOR ONLY IF OTHER DOOR IS CLOSED AND LOCKED.

NOTE, OPPOSITE DOOR WILL REMAIN LOCKED AS LONG AS OTHER DOOR IS UNLOCKED.

FIRE ALARM TO RELEASE BOTH M490 MAG LOCKS.

IN THIS EXAMPLE ALL WIRING CONNECTIONS ARE MADE IN THE PS900 ENCLOSURE.

DATE DRAWN: 3-21-13

REVISION DATE: 07-03-17

ALLEGION™

TITLE: PS900-4RL-FA SECURITY INTERLOCK WITH M400P MAG LOCKS

DRAWING TYPE: RISER DIAGRAM

DWG NO: 109442

DRAWN/CHECKED BY: B DOVE/B DYE

REV. C

THIS DIAGRAM REPRESENTS A GENERIC CONFIGURATION. CUSTOM WIRING DIAGRAMS CAN BE ACQUIRED BY CONTACTING TECHNICAL SUPPORT.

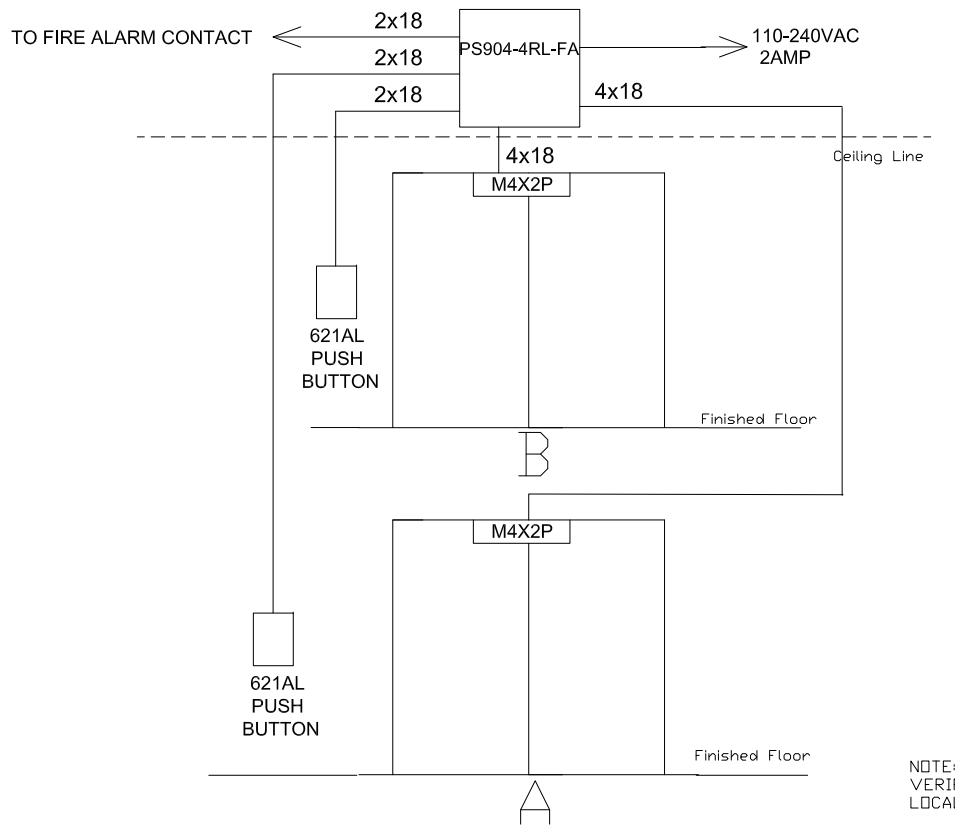

NOTE:
VERIFY HARDWARE AND OPERATION ACCEPTABLE TO LOCAL AHJ.

NOTES:
1) ALL LOW VOLTAGE WIRING TO BE STANDARD, MULTI-CONDUCTOR COLOR CODED WITHOUT SPLICES.

2) WIRING TO CONFORM TO APPLICABLE NATIONAL, STATE AND LOCAL ELECTRICAL CODES.

3) REFER TO SPECIFIC PRODUCT INSTALLATION INSTRUCTIONS FOR SPESCIFIC WIRING REQUIREMENTS.

4) THIS DRAWING IS FOR GRAPHICAL REPRESENTATION OF PRODUCTS DETAILED IN THE HARDWARE SET ONLY.

5) ADDITIONAL WIRING WILL BE REQUIRED FROM ACP THAT IS NOT SHOWN HERE. CONSULT PROVIDER FOR DETAILS.

HARDWARE USED:
2 M4X2P MAG LOCKS

2 621AL PUSH BUTTONS

1 PS904-4RL-FA POWER SUPPLY

FIRE ALARM CONTACT SUPPLIED BY OTHERS

TYPE
2 DOOR SAFETY INTERLOCK WITH OVERRIDE BUTTONS

DOORS ARE INTERLOCKED WITH EACH OTHER. BOTH DOORS ARE UNLOCKED UNTIL ONE DOOR IS OPENED THEN THE OTHER PAIR OF DOORS WILL BE LOCKED.

EITHER PUSHBUTTON OR FIRE ALARM CONTACT WILL DEACTIVATE BOTH MAGLOCKS.

IN THIS EXAMPLE ALL CONNECTIONS ARE MADE IN THE PS904 ENCLOSURE.

DATE DRAWN: 3-21-13
REVISION DATE: 3-21-13

copyright 2013

ALLEGION™

TITLE:
PS904 -4RL-FA, M4X2P
SAFETY INTERLOCK

DRAWING TYPE: RISER DIAGRAM
DWG NO: 109443
DRAWN/CHECKED BY: B DOVE
REV A

THIS DIAGRAM REPRESENTS A GENERIC CONFIGURATION. CUSTOM WIRING DIAGRAMS CAN BE ACQUIRED BY CONTACTING TECHNICAL SUPPORT.

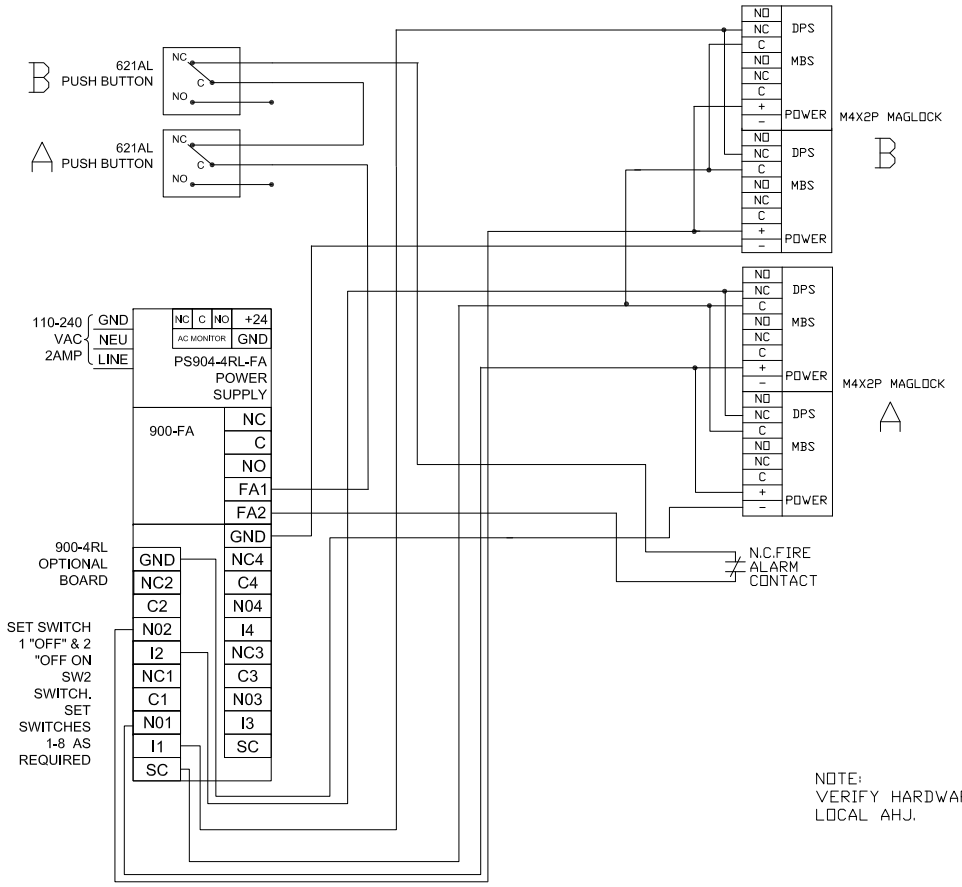

NOTE:
VERIFY HARDWARE AND OPERATION ACCEPTABLE TO LOCAL AHJ.

NOTES:
1) ALL LOW VOLTAGE WIRING TO BE STANDARD, MULTI-CONDUCTOR COLOR CODED WITHOUT SPLICES.

2) WIRING TO CONFORM TO APPLICABLE NATIONAL, STATE AND LOCAL ELECTRICAL CODES.

3) REFER TO SPECIFIC PRODUCT INSTALLATION INSTRUCTIONS FOR SPESCIFIC WIRING REQUIREMENTS.

4) THIS DRAWING IS FOR GRAPHICAL REPRESENTATION OF PRODUCTS DETAILED IN THE HARDWARE SET ONLY.

5) ADDITIONAL WIRING WILL BE REQUIRED FROM ACP THAT IS NOT SHOWN HERE. CONSULT PROVIDER FOR DETAILS.

HARDWARE USED:
2 M4X2P MAG LOCKS

2 621AL PUSH BUTTONS

1 PS904-4RL-FA POWER SUPPLY

FIRE ALARM CONTACT SUPPLIED BY OTHERS

TYPE
2 DOOR SAFETY INTERLOCK WITH OVERRIDE BUTTONS

DOORS ARE INTERLOCKED WITH EACH OTHER. BOTH DOORS ARE UNLOCKED UNTIL ONE DOOR IS OPENED THEN THE OTHER PAIR OF DOORS WILL BE LOCKED.

EITHER PUSHBUTTON OR FIRE ALARM CONTACT WILL DEACTIVATE BOTH MAGLOCKS.

IN THIS EXAMPLE ALL CONNECTIONS ARE MADE IN THE PS904 ENCLOSURE.

DATE DRAWN: 3-21-13
REVISION DATE: 3-21-13

copyright 2013

ALLEGION™

TITLE:
PS904 -4RL-FA, M4X2P
SAFETY INTERLOCK

DRAWING TYPE:
WIRING DIAGRAM

DWG NO: 109443

DRAWN/CHECKED BY: B DOVE

REV
A

THIS DIAGRAM REPRESENTS A GENERIC CONFIGURATION. CUSTOM WIRING DIAGRAMS CAN BE ACQUIRED BY CONTACTING TECHNICAL SUPPORT.

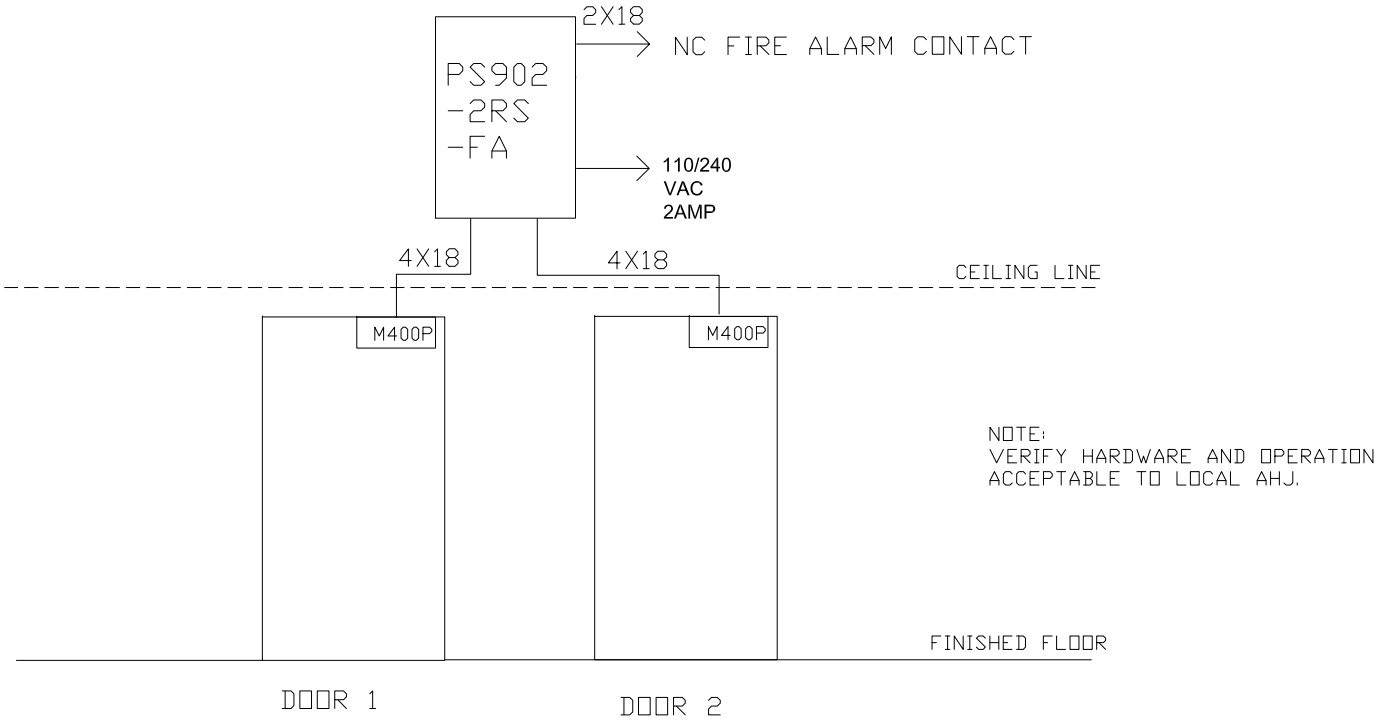

NOTES:
1) ALL LOW VOLTAGE WIRING TO BE STANDARD, MULTI-CONDUCTOR COLOR CODED WITHOUT SPLICES.

2) WIRING TO CONFORM TO APPLICABLE NATIONAL, STATE AND LOCAL ELECTRICAL CODES.

3) REFER TO SPECIFIC PRODUCT INSTALLATION INSTRUCTIONS FOR SPESCIFIC WIRING REQUIREMENTS.

4) THIS DRAWING IS FOR GRAPHICAL REPRESENTATION OF PRODUCTS DETAILED IN THE HARDWARE SET ONLY.

5) ADDITIONAL WIRING WILL BE REQUIRED FROM ACP THAT IS NOT SHOWN HERE. CONSULT PROVIDER FOR DETAILS.

HARDWARE USED:

2 M400P MAGNETIC LOCKS

1 PS902-2RS-FA POWER SUPPLY

FIRE ALARM CONTACT SUPPLIED BY OTHERS

TYPE

2 DOOR SAFETY INTERLOCK

OPERATION:

SAFETY INTERLOCK - WHEN ONE DOOR OPENS OTHER DOOR LOCKS. WHEN BOTH DOORS CLOSED BOTH ARE UNLOCKED

IN THIS EXAMPLE ALL WIRING CONNECTIONS ARE MADE IN PS902 ENCLOSURE.

FIRE ALARM TO RELEASE BOTH M400P MAG LOCKS

DATE DRAWN: 3-14-13

REVISION DATE: 3-14-13

copyright 2013

ALLEGION™

TITLE: PS902-2RS-FA x 2 M400+ MAG LOCKS X 4 CARD READERS

DRAWING TYPE: RISER DIAGRAM

DWG NO: 109437

DRAWN/CHECKED BY: B DOVE

REV A

THIS DIAGRAM REPRESENTS A GENERIC CONFIGURATION. CUSTOM WIRING DIAGRAMS CAN BE ACQUIRED BY CONTACTING TECHNICAL SUPPORT.

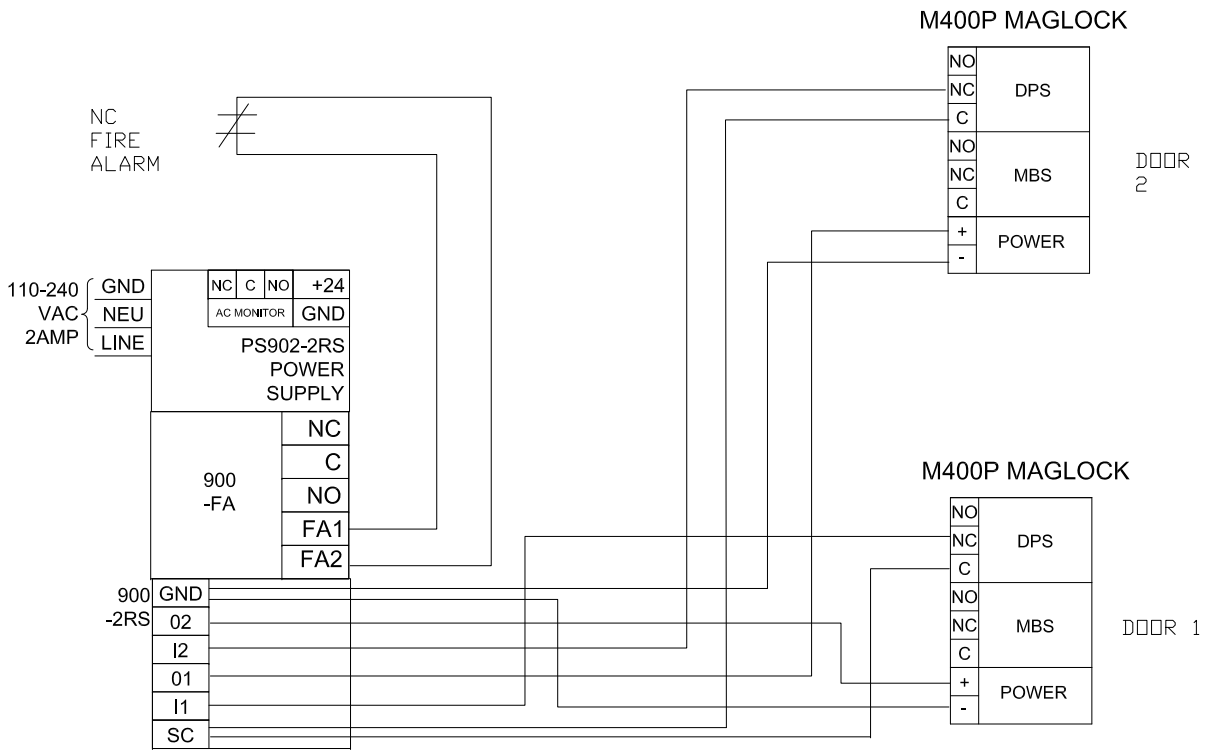

NOTE:
VERIFY HARDWARE AND OPERATION ACCEPTABLE TO LOCAL AHJ.

NOTES:
1) ALL LOW VOLTAGE WIRING TO BE STANDARD, MULTI-CONDUCTOR COLOR CODED WITHOUT SPLICES.

2) WIRING TO CONFORM TO APPLICABLE NATIONAL, STATE AND LOCAL ELECTRICAL CODES.

3) REFER TO SPECIFIC PRODUCT INSTALLATION INSTRUCTIONS FOR SPESCIFIC WIRING REQUIREMENTS.

4) THIS DRAWING IS FOR GRAPHICAL REPRESENTATION OF PRODUCTS DETAILED IN THE HARDWARE SET ONLY.

5) ADDITIONAL WIRING WILL BE REQUIRED FROM ACP THAT IS NOT SHOWN HERE. CONSULT PROVIDER FOR DETAILS.

HARDWARE USED:

2 M400P MAGNETIC LOCKS

1 PS902-2RS-FA POWER SUPPLY

FIRE ALARM CONTACT SUPPLIED BY OTHERS

TYPE

2 DOOR SAFETY INTERLOCK

OPERATION:

SAFETY INTERLOCK - WHEN ONE DOOR OPENS OTHER DOOR LOCKS. WHEN BOTH DOORS CLOSED BOTH ARE UNLOCKED

IN THIS EXAMPLE ALL WIRING CONNECTIONS ARE MADE IN PS902 ENCLOSURE.

FIRE ALARM TO RELEASE BOTH M400P MAG LOCKS

DATE DRAWN: 3-14-13

REVISION DATE: 3-14-13

copyright 2013

ALLEGION™

TITLE: PS902-2RS-FA x 2 M400+ MAG LOCKS X 4 CARD READERS

DRAWING TYPE: WIRING DIAGRAM

DWG NO: 109437

DRAWN/CHECKED BY: B DOVE

REV A

THIS DIAGRAM REPRESENTS A GENERIC CONFIGURATION. CUSTOM WIRING DIAGRAMS CAN BE ACQUIRED BY CONTACTING TECHNICAL SUPPORT.

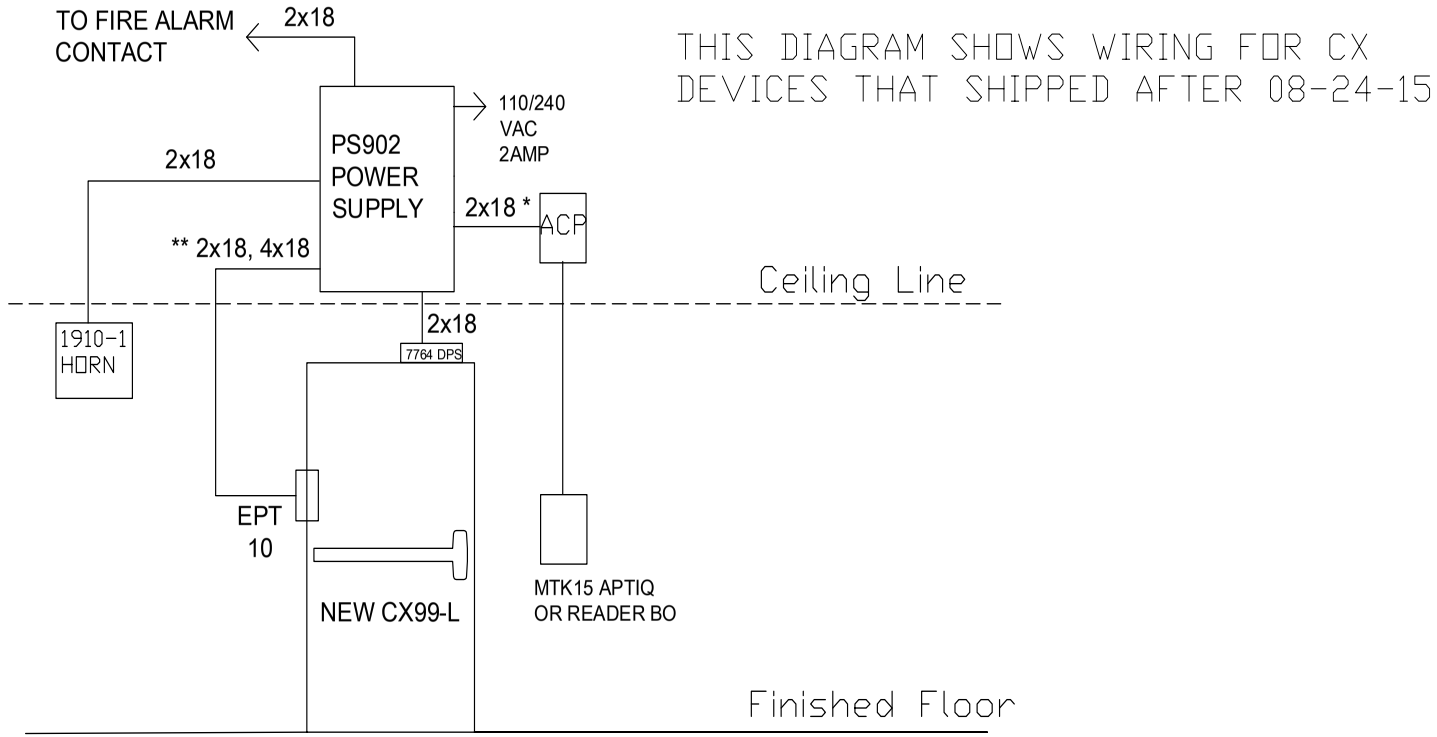

* CONDUCTOR COUNT AND CONNECTIONS TO BE DETERMINED BY ACP PROVIDER

** USE 18 GAUGE WIRE FOR DISTANCES UP TO 200' FROM EPT TO PS902 OR USE 14 GAUGE FOR DISTANCES UP TO 500' FROM EPT TO PS902

NOTES:
1) ALL LOW VOLTAGE WIRING TO BE STANDARD, MULTI-CONDUCTOR COLOR CODED WITHOUT SPLICES.

2) WIRING TO CONFORM TO APPLICABLE NATIONAL, STATE AND LOCAL ELECTRICAL CODES.

3) REFER TO SPECIFIC PRODUCT INSTALLATION INSTRUCTIONS FOR SPESCIFIC WIRING REQUIREMENTS.

4) THIS DRAWING IS FOR GRAPHICAL REPRESENTATION OF PRODUCTS DETAILED IN THE HARDWARE SET ONLY.

5) * CONDUCTOR COUNT TO BE DETERMINED BY ACCESS CONTROL PANEL PROVIDER.

HARDWARE USED:

1 NEW CX 98/99-L RIM DEVICE
1 EPT10
1 7764 DPS
1 1910-1 HORN
1 PS902
1 MTK15 READER BY ACP BO
1 FIRE ALARM CONTACT

TYPE DELAYED EGRESS SINGLE DOOR

OPERATION:

CHEXIT TO PROVIDE DELAY EGRESS. WHEN CX IS IN ALARM AUDIBLE WILL SOUND IN CX DEVICE AND EXTERNAL 1910-1 HORN.

FIRE ALARM TO RELEASE DOOR FOR IMMEDIATE EGRESS.

MTK15 READER TO RELEASE CX THROUGH ACP CONTROL CONTACT FOR AUTHORIZED PASSAGE . MTK15 OR KEYSWITCH IN CX DEVICE TO RESET CX FROM ALARM.

IN THIS EXAMPLE ALL WIRING CONNECTIONS ARE MADE IN PS902 ENCLOSURE.

DATE DRAWN: 07-11-18 REVISION DATE: 07-11-18

ALLEGION™

TITLE: CX SINGLE DOOR CX WITH PS902

DRAWING TYPE: RISER DIAGRAM

DWG NO: 112289

DRAWN/CHECKED BY: B DOVE

REV A

THIS DIAGRAM REPRESENTS A GENERIC CONFIGURATION. CUSTOM WIRING DIAGRAMS CAN BE ACQUIRED BY CONTACTING TECHNICAL SUPPORT.

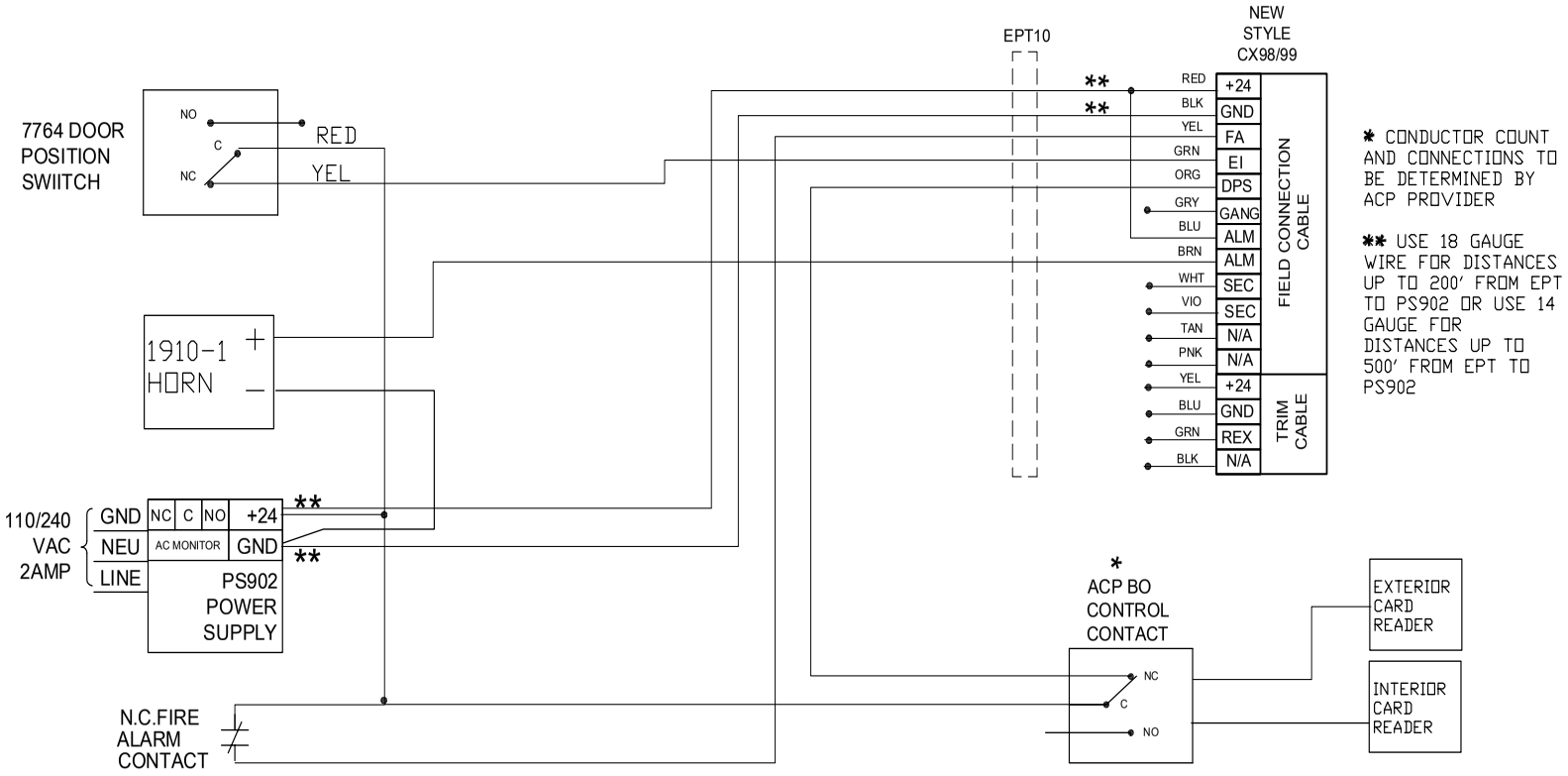

* CONDUCTOR COUNT AND CONNECTIONS TO BE DETERMINED BY ACP PROVIDER

** USE 18 GAUGE WIRE FOR DISTANCES UP TO 200' FROM EPT TO PS902 OR USE 14 GAUGE FOR DISTANCES UP TO 500' FROM EPT TO PS902

THIS DIAGRAM SHOWS WIRING FOR CX DEVICES THAT SHIPPED AFTER 08-24-15

NOTES:
1) ALL LOW VOLTAGE WIRING TO BE STANDARD, MULTI-CONDUCTOR COLOR CODED WITHOUT SPLICES.

2) WIRING TO CONFORM TO APPLICABLE NATIONAL, STATE AND LOCAL ELECTRICAL CODES.

3) REFER TO SPECIFIC PRODUCT INSTALLATION INSTRUCTIONS FOR SPECIFIC WIRING REQUIREMENTS.

4) THIS DRAWING IS FOR GRAPHICAL REPRESENTATION OF PRODUCTS DETAILED IN THE HARDWARE SET ONLY.

5) * CONDUCTOR COUNT TO BE DETERMINED BY ACCESS CONTROL PANEL PROVIDER.

HARDWARE USED:

1 NEW CX 98/99-L RIM DEVICE
1 EPT10
1 7764 DPS
1 1910-1 HORN
1 PS902
2 CARD READER BY ACP BO
1 FIRE ALARM CONTACT

TYPE: DELAYED EGRESS SINGLE DOOR

OPERATION:

CHEXIT TO PROVIDE DELAY EGRESS. WHEN CX IS IN ALARM AUDIBLE WILL SOUND IN CX DEVICE AND EXTERNAL 1910-1 HORN.

FIRE ALARM TO RELEASE DOOR FOR IMMEDIATE EGRESS.

CARD READERS TO RELEASE CX THROUGH ACP CONTROL CONTACT FOR AUTHORIZED PASSAGE . CARD READER OR KEYSWITCH IN CX DEVICE TO RESET CX FROM ALARM.

IN THIS EXAMPLE ALL WIRING CONNECTIONS ARE MADE IN PS914 ENCLOSURE.

DATE DRAWN: 07-11-18
REVISION DATE: 07-11-18

ALLEGION™

TITLE: CX SINGLE DOOR WITH PS902 AND INT/EXT CARD READERS

DRAWING TYPE: WIRING DIAGRAM
DWG NO: 112289
DRAWN/CHECKED BY: B DOVE/
REV: A

THIS DIAGRAM REPRESENTS A GENERIC CONFIGURATION. CUSTOM WIRING DIAGRAMS CAN BE ACQUIRED BY CONTACTING TECHNICAL SUPPORT.

THIS DIAGRAM SHOWS WIRING FOR CX DEVICES THAT SHIPPED AFTER 08-24-15

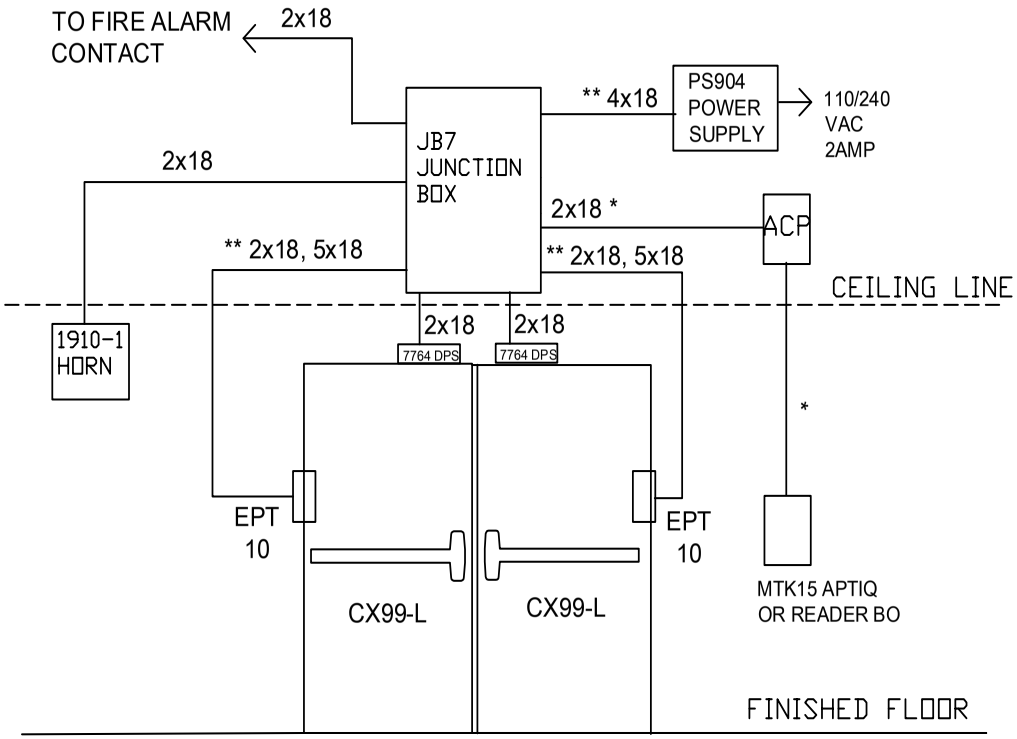

* CONDUCTOR COUNT AND CONNECTIONS TO BE DETERMINED BY ACP PROVIDER

** USE 18 GAUGE WIRE FOR DISTANCES UP TO 200' FROM EPT TO PS902 OR USE 14 GAUGE FOR DISTANCES UP TO 500' FROM EPT TO PS902

NOTES:
1) ALL LOW VOLTAGE WIRING TO BE STANDARD, MULTI-CONDUCTOR COLOR CODED WITHOUT SPLICES.

2) WIRING TO CONFORM TO APPLICABLE NATIONAL, STATE AND LOCAL ELECTRICAL CODES.

3) REFER TO SPECIFIC PRODUCT INSTALLATION INSTRUCTIONS FOR SPESCIFIC WIRING REQUIREMENTS.

4) THIS DRAWING IS FOR GRAPHICAL REPRESENTATION OF PRODUCTS DETAILED IN THE HARDWARE SET ONLY.

5) * CONDUCTOR COUNT TO BE DETERMINED BY ACCESS CONTROL PANEL PROVIDER.

HARDWARE USED:
- 2 NEW CX99-L RIM DEVICE
- 2 EPT10
- 2 7764 DPS
- 1 JB7 JUNCTION BOX
- 1 MULLION
- 1 1910-1 HORN
- 1 PS904
- 1 MTK15 READER BY ACP BO
- 1 FIRE ALARM CONTACT

TYPE DELAYED EGRESS DOUBLE DOOR

OPERATION:

CHEXITS TO PROVIDE DELAY EGRESS. WHEN CX IS IN ALARM AUDIBLE WILL SOUND IN CX DEVICE AND EXTERNAL 1910-1 HORN.

FIRE ALARM TO RELEASE DOORS FOR IMMEDIATE EGRESS.

STAGGER REARM TIMES ON CX DEVICES BY SETTING SWITCHES ON CX PCB DIFFERENTLY.

MTK15 READER TO RELEASE BOTH CX THROUGH ACP CONTROL CONTACT FOR AUTHORIZED PASSAGE . MTK15 OR KEYSWITCH IN CX DEVICE TO RESET CX FROM ALARM.

IN THIS EXAMPLE ALL WIRING CONNECTIONS ARE MADE IN JB7 JUNCTION BOX.

DATE DRAWN: 07-11-18

REVISION DATE: 07-11-18

ALLEGION™

TITLE: CX DOUBLE DOOR CX WITH PS904

DRAWING TYPE: RISER DIAGRAM

DWG NO: 112290R

DRAWN/CHECKED BY: B DOVE

REV A

THIS DIAGRAM SHOWS WIRING FOR CX DEVICES THAT SHIPPED AFTER 08-24-15

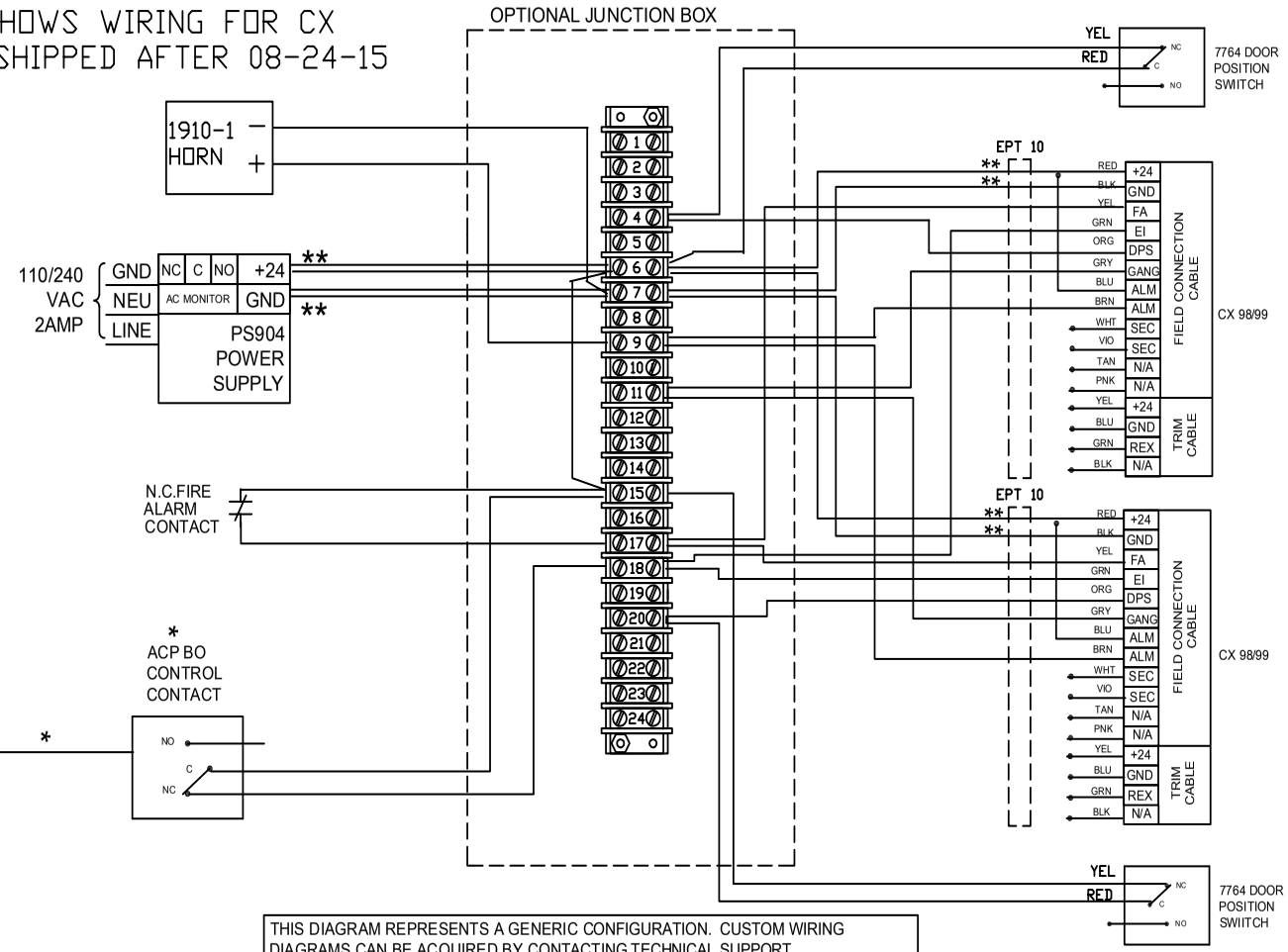

* CONDUCTOR COUNT AND CONNECTIONS TO BE DETERMINED BY ACP PROVIDER

** USE 18 GAUGE WIRE FOR DISTANCES UP TO 200' FROM EPT TO PS902 OR USE 14 GAUGE FOR DISTANCES UP TO 500' FROM EPT TO PS902

THIS DIAGRAM REPRESENTS A GENERIC CONFIGURATION. CUSTOM WIRING DIAGRAMS CAN BE ACQUIRED BY CONTACTING TECHNICAL SUPPORT.

NOTES:

1) ALL LOW VOLTAGE WIRING TO BE STANDARD, MULTI-CONDUCTOR COLOR CODED WITHOUT SPLICES.

2) WIRING TO CONFORM TO APPLICABLE NATIONAL, STATE AND LOCAL ELECTRICAL CODES.

3) REFER TO SPECIFIC PRODUCT INSTALLATION INSTRUCTIONS FOR SPECIFIC WIRING REQUIREMENTS.

4) THIS DRAWING IS FOR GRAPHICAL REPRESENTATION OF PRODUCTS DETAILED IN THE HARDWARE SET ONLY.

5) * CONDUCTOR COUNT TO BE DETERMINED BY ACCESS CONTROL PANEL PROVIDER.

HARDWARE USED:

2 CX 98/99-L RIM DEVICE
2 EPT10
2 7764 DPS
1 JB7 JUNCTION BOX
1 MULLION
1 1910-1 HORN
1 PS904
1 MTK15 READER BY ACP BO
1 FIRE ALARM CONTACT

TYPE: DELAYED EGRESS DOUBLE DOOR

OPERATION:

CHEXITS TO PROVIDE DELAY EGRESS. WHEN CX IS IN ALARM AUDIBLE WILL SOUND IN CX DEVICE AND EXTERNAL 1910-1 HORN.

FIRE ALARM TO RELEASE DOORS FOR IMMEDIATE EGRESS.

STAGGER REARM TIMES ON CX DEVICES BY SETTING SWITCHES ON CX PCB DIFFERENTLY.

MTK15 READER TO RELEASE BOTH CX THROUGH ACP CONTROL CONTACT FOR AUTHORIZED PASSAGE . MTK15 OR KEYSWITCH IN CX DEVICE TO RESET CX FROM ALARM.

IN THIS EXAMPLE ALL WIRING CONNECTIONS ARE MADE IN JB7 JUNCTION BOX.

DATE DRAWN: 07-11-18

REVISION DATE: 07-11-18

ALLEGION™

TITLE: CX DOUBLE DOOR CX WITH PS904

DRAWING TYPE: WIRING DIAGRAM

DWG NO: 112290

DRAWN/CHECKED BY: B DOVE/

REV A

THIS DIAGRAM REPRESENTS A GENERIC CONFIGURATION. CUSTOM WIRING DIAGRAMS CAN BE ACQUIRED BY CONTACTING TECHNICAL SUPPORT.

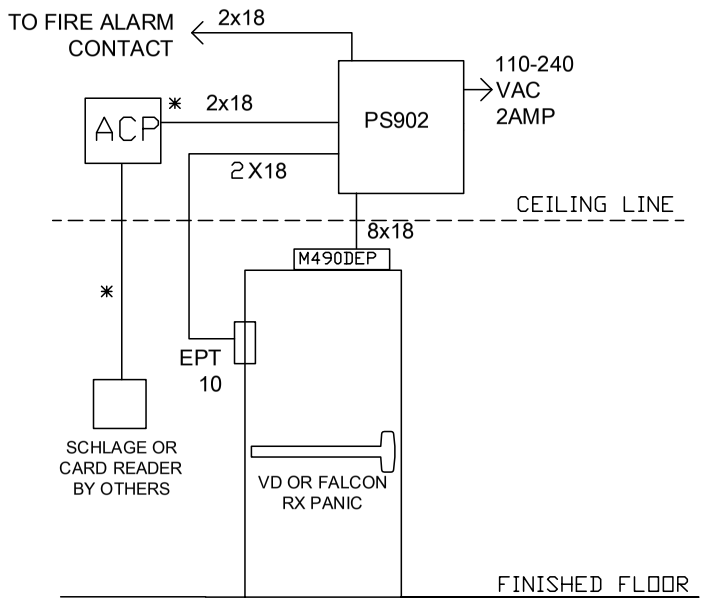

NOTE:
* ADDITIONAL WIRING IS REQUIRED. SEE MANUFACTURER INSTALLATION INSTRUCTION

NOTES:
1) ALL LOW VOLTAGE WIRING TO BE STANDARD, MULTI-CONDUCTOR COLOR CODED WITHOUT SPLICES.

2) WIRING TO CONFORM TO APPLICABLE NATIONAL, STATE AND LOCAL ELECTRICAL CODES.

3) REFER TO SPECIFIC PRODUCT INSTALLATION INSTRUCTIONS FOR SPECIFIC WIRING REQUIREMENTS.

4) THIS DRAWING IS FOR GRAPHICAL REPRESENTATION OF PRODUCTS DETAILED IN THE HARDWARE SET ONLY.

5) * CONDUCTOR COUNT TO BE DETERMINED BY ACCESS CONTROL PANEL PROVIDER.

HARDWARE USED:
- 1 VD OR FALCON RX PANIC DEVICE
- 1 EPT10 POWER TRANSFERS
- 1 M490DEP MAG LOCK
- 1 PS902 POWER SUPPLY
- 1 SCHLAGE OR CARD READER BY OTHERS WITH ACP
- FIRE ALARM CONTACT BY OTHERS

TYPE: DELAYED EGRESS SINGLE

OPERATION:
M490DEP MAG LOCK TO PROVIDE DELAYED EGRESS. PUSHING ON PANIC INITIATES 15 SECOND RELEASE COUNTDOWN.

FIRE ALARM TO RELEASE DOORS IMMEDIATELY.

NTERIOR SCHLAGE OR CARD READER BY OTHERS TO RELEASE DOORS FOR UNAUTHORIZED EGRESS OR WILL RESET M490PDEP FROM ALARM.

IN THIS EXAMPLE ALL WIRING CONNECTIONS ARE MADE IN PS902 ENCLOSURE.

DATE DRAWN: 4-4-2013
REVISION DATE: 07-03-17

ALLEGION™

TITLE: M490DEP WITH RX PANIC, ACCESS CONTROL AND PS902

DRAWING TYPE: RISER DIAGRAM

DWG NO: 109498

DRAWN/CHECKED BY: B DOVE

REV: C

THIS DIAGRAM REPRESENTS A GENERIC CONFIGURATION. CUSTOM WIRING DIAGRAMS CAN BE ACQUIRED BY CONTACTING TECHNICAL SUPPORT.

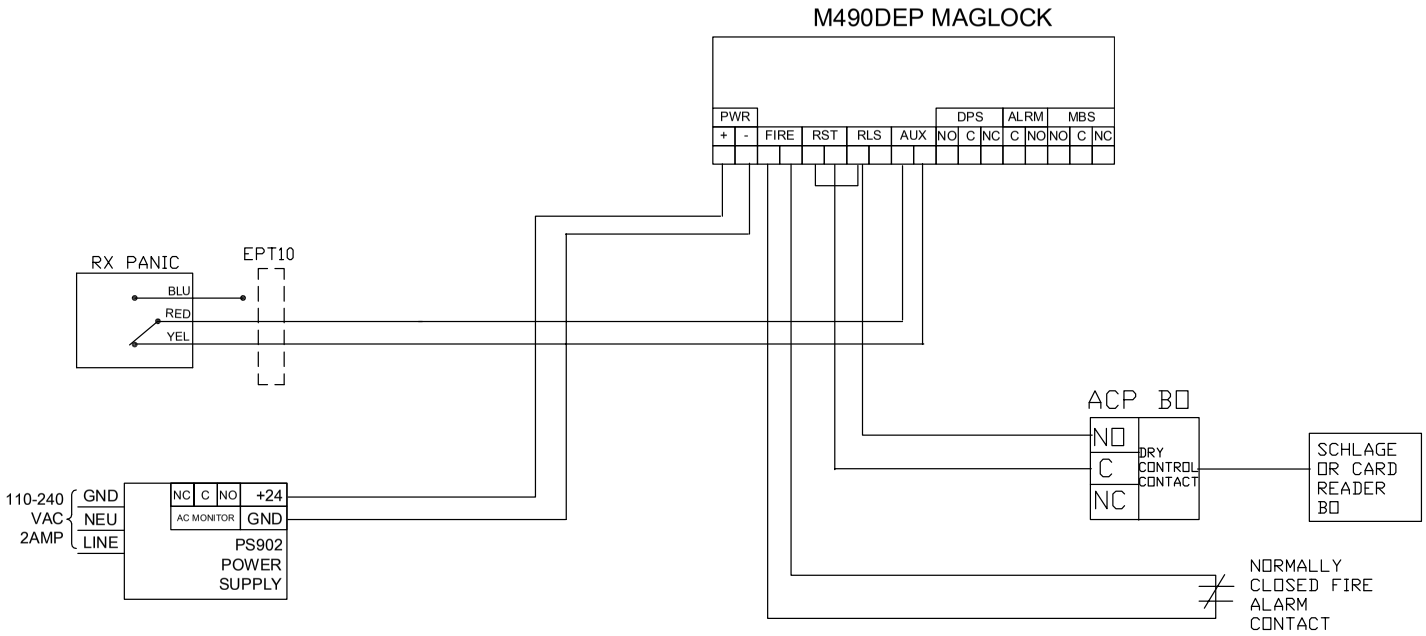

NOTES:
1) ALL LOW VOLTAGE WIRING TO BE STANDARD, MULTI-CONDUCTOR COLOR CODED WITHOUT SPLICES.

2) WIRING TO CONFORM TO APPLICABLE NATIONAL, STATE AND LOCAL ELECTRICAL CODES.

3) REFER TO SPECIFIC PRODUCT INSTALLATION INSTRUCTIONS FOR SPECIFIC WIRING REQUIREMENTS.

4) THIS DRAWING IS FOR GRAPHICAL REPRESENTATION OF PRODUCTS DETAILED IN THE HARDWARE SET ONLY.

5) * CONDUCTOR COUNT TO BE DETERMINED BY ACCESS CONTROL PANEL PROVIDER.

HARDWARE USED:
- 1 VD OR FALCON RX PANIC DEVICE
- 1 EPT10 POWER TRANSFERS
- 1 M490DEP MAG LOCK
- 1 PS902 POWER SUPPLY
- 1 SCHLAGE OR CARD READER BY OTHERS WITH ACP
- FIRE ALARM CONTACT BY OTHERS

TYPE: DELAYED EGRESS SINGLE

OPERATION:
M490DEP MAG LOCK TO PROVIDE DELAYED EGRESS. PUSHING ON PANIC INITIATES 15 SECOND RELEASE COUNTDOWN.

FIRE ALARM TO RELEASE DOORS IMMEDIATELY.

NTERIOR SCHLAGE OR CARD READER BY OTHERS TO RELEASE DOORS FOR UNAUTHORIZED EGRESS OR WILL RESET M490PDEP FROM ALARM.

IN THIS EXAMPLE ALL WIRING CONNECTIONS ARE MADE IN PS902 ENCLOSURE.

DATE DRAWN: 4-4-2013
REVISION DATE: 07-03-17

ALLEGION™

TITLE: M490DEP WITH RX PANIC, ACCESS CONTROL AND PS902

DRAWING TYPE: WIRING DIAGRAM
DWG NO: 109498
DRAWN/CHECKED BY: B DOVE/
REV: C

THIS DIAGRAM REPRESENTS A GENERIC CONFIGURATION. CUSTOM WIRING DIAGRAMS CAN BE ACQUIRED BY CONTACTING TECHNICAL SUPPORT.

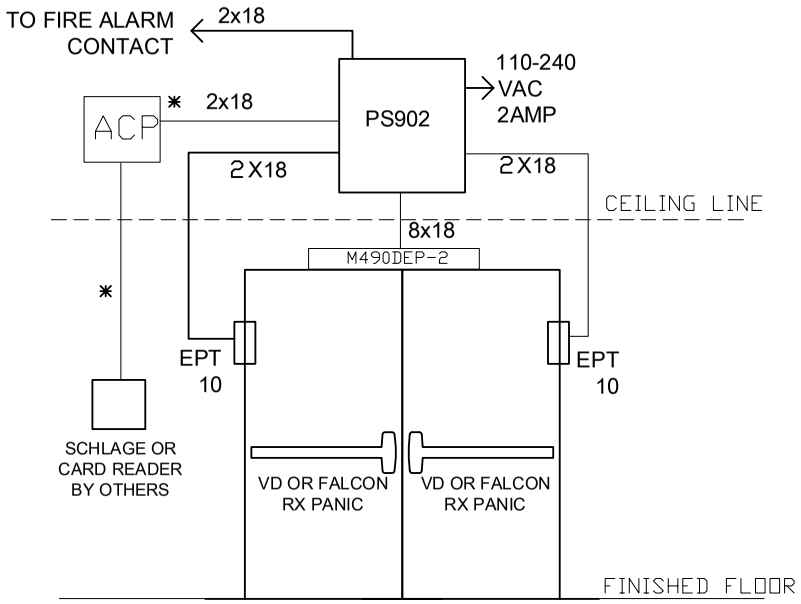

NOTE:
✱ADDITIONAL WIRING IS REQUIRED. SEE MANUFACTURER INSTALLATION INSTRUCTION

NOTES:
1) ALL LOW VOLTAGE WIRING TO BE STANDARD, MULTI-CONDUCTOR COLOR CODED WITHOUT SPLICES.

2) WIRING TO CONFORM TO APPLICABLE NATIONAL, STATE AND LOCAL ELECTRICAL CODES.

3) REFER TO SPECIFIC PRODUCT INSTALLATION INSTRUCTIONS FOR SPECIFIC WIRING REQUIREMENTS.

4) THIS DRAWING IS FOR GRAPHICAL REPRESENTATION OF PRODUCTS DETAILED IN THE HARDWARE SET ONLY.

5) ✱ CONDUCTOR COUNT TO BE DETERMINED BY ACCESS CONTROL PANEL PROVIDER.

HARDWARE USED:
- 2 VD OR FALCON RX PANIC DEVICES
- 2 EPT10 POWER TRANSFERS
- 1 M490DEP-2 MAG LOCK
- 1 PS902 POWER SUPPLY
- 1 SCHLAGE OR CARD READER BY OTHERS WITH ACP
- FIRE ALARM CONTACT BY OTHERS

TYPE DELAYED EGRESS PAIR

OPERATION:
M490DEP-2 MAG LOCK TO PROVIDE DELAYED EGRESS. PUSHING ON EITHER PANIC INITIATES 15 SECOND RELEASE COUNTDOWN.

FIRE ALARM TO RELEASE DOORS IMMEDIATELY.

NTERIOR SCHLAGE OR CARD READER BY OTHERS TO RELEASE DOORS FOR AUTHORIZED EGRESS OR WILL RESET M490DEP-2 FROM ALARM.

IN THIS EXAMPLE ALL WIRING CONNECTIONS ARE MADE IN PS902 ENCLOSURE.

DATE DRAWN: 4-3-2013 REVISION DATE: 07-03-17

ALLEGION™

TITLE: M490DEP-2 WITH PAIR RX PANICS, ACCESS CONTROL AND PS902

DRAWING TYPE: RISER DIAGRAM

DWG NO: 109500

DRAWN/CHECKED BY: B DOVE

REV C

THIS DIAGRAM REPRESENTS A GENERIC CONFIGURATION. CUSTOM WIRING DIAGRAMS CAN BE ACQUIRED BY CONTACTING TECHNICAL SUPPORT.

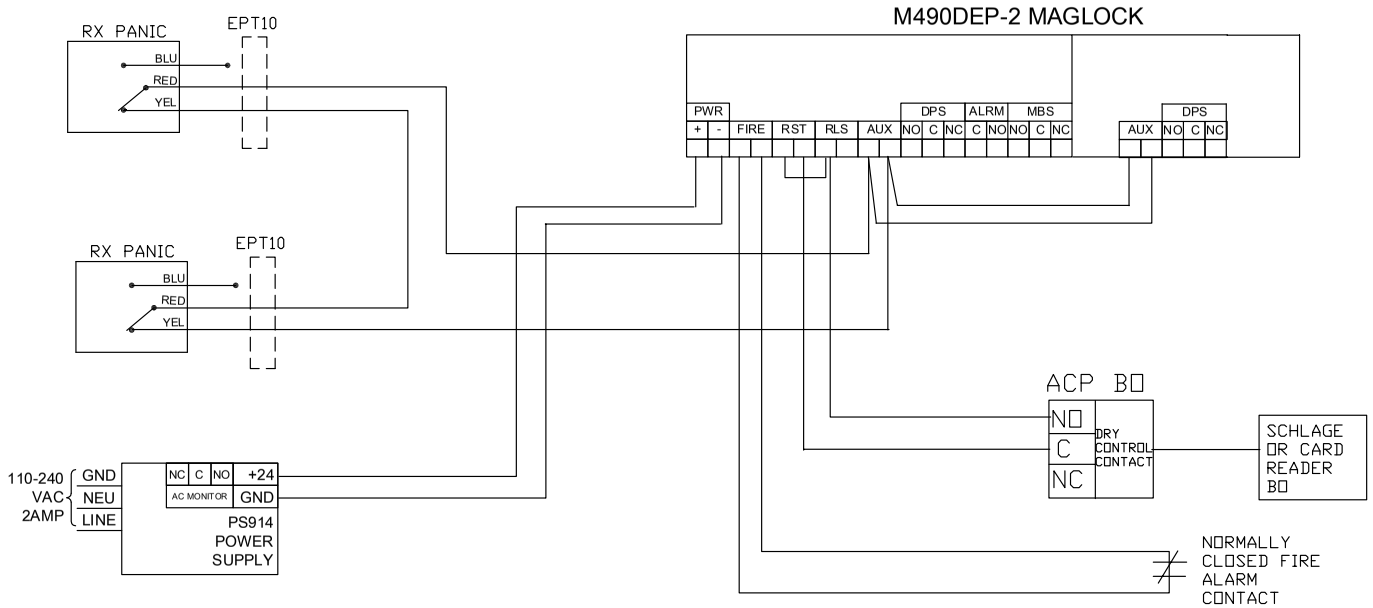

NOTES:
1) ALL LOW VOLTAGE WIRING TO BE STANDARD, MULTI-CONDUCTOR COLOR CODED WITHOUT SPLICES.

2) WIRING TO CONFORM TO APPLICABLE NATIONAL, STATE AND LOCAL ELECTRICAL CODES.

3) REFER TO SPECIFIC PRODUCT INSTALLATION INSTRUCTIONS FOR SPECIFIC WIRING REQUIREMENTS.

4) THIS DRAWING IS FOR GRAPHICAL REPRESENTATION OF PRODUCTS DETAILED IN THE HARDWARE SET ONLY.

5) * CONDUCTOR COUNT TO BE DETERMINED BY ACCESS CONTROL PANEL PROVIDER.

HARDWARE USED:
- 2 VD OR FALCON RX PANIC DEVICES
- 2 EPT10 POWER TRANSFERS
- 1 M490DEP-2 MAG LOCK
- 1 PS902 POWER SUPPLY
- 1 SCHLAGE OR CARD READER BY OTHERS WITH ACP
- FIRE ALARM CONTACT BY OTHERS

TYPE: DELAYED EGRESS PAIR

OPERATION:
M490DEP-2 MAG LOCK TO PROVIDE DELAYED EGRESS. PUSHING ON EITHER PANIC INITIATES 15 SECOND RELEASE COUNTDOWN.

FIRE ALARM TO RELEASE DOORS IMMEDIATELY.

NTERIOR SCHLAGE OR CARD READER BY OTHERS TO RELEASE DOORS FOR AUTHORIZED EGRESS OR WILL RESET M490DE-2 FROM ALARM.

IN THIS EXAMPLE ALL WIRING CONNECTIONS ARE MADE IN PS902 ENCLOSURE.

DATE DRAWN: 4-3-2013
REVISION DATE: 07-03-17

ALLEGION™

TITLE: M490DE-2 WITH PAIR RX PANICS, ACCESS CONTROL AND PS902

DRAWING TYPE: WIRING DIAGRAM
DWG NO: 109500
DRAWN/CHECKED BY: B DOVE/
REV: C

THIS DIAGRAM REPRESENTS A GENERIC CONFIGURATION. CUSTOM WIRING DIAGRAMS CAN BE ACQUIRED BY CONTACTING TECHNICAL SUPPORT.

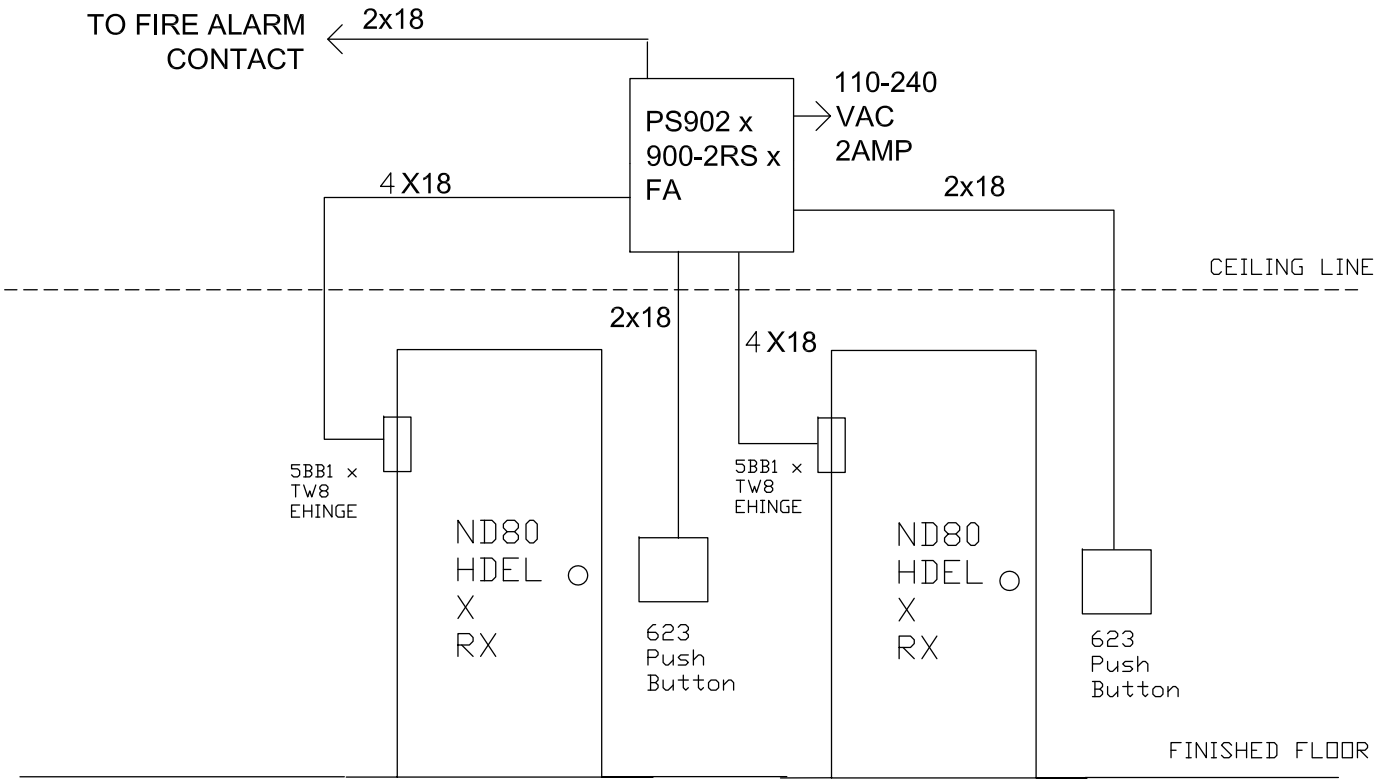

NOTES:
1) ALL LOW VOLTAGE WIRING TO BE STANDARD, MULTI-CONDUCTOR COLOR CODED WITHOUT SPLICES.

2) WIRING TO CONFORM TO APPLICABLE NATIONAL, STATE AND LOCAL ELECTRICAL CODES.

3) REFER TO SPECIFIC PRODUCT INSTALLATION INSTRUCTIONS FOR SPESCIFIC WIRING REQUIREMENTS.

4) THIS DRAWING IS FOR GRAPHICAL REPRESENTATION OF PRODUCTS DETAILED IN THE HARDWARE SET ONLY.

5) ADDITIONAL WIRING WILL BE REQUIRED FROM ACP THAT IS NOT SHOWN HERE. CONSULT PROVIDER FOR DETAILS.

HARDWARE USED:

1 PS902-2RS-FA

2 623 PUSHBUTTONS

2 5BB1 TW8 EHINGES

2 ND80 HDEL X RX LOCKSETS

1 FIRE ALARM CONTACT BY BUILDING SYSTEM

TYPE

SHARED RESTROOM

OPERATION:
COMMON RESTROOM SHARED BY 2 ROOMS.

DOORS NORMALLY UNLOCKED.

UPON ENTERING RESTROOM ONE OF THE MOMENTARY 623 PUSHBUTTONS WILL BE PRESSED TO LOCK BOTH DOORS.

LEAVING THE RESTROOM - WHEN EITHER LEVER IS USED TO EXIT. RX SWITCH IN LEVER WILL ELECTRICALLY UNLOCK BOTH DOORS.

FIRE ALARM ACTIVATION TO CAUSE ND EL LOCKS TO UNLOCK.

IN THIS EXAMPLE ALL WIRING CONNECTIONS ARE MADE IN THE PS902 POWER SUPPLY.

DATE DRAWN: 4-25-13

REVISION DATE: 4-25-13

copyright 2013

ALLEGION™

TITLE: ND80 HDEL X RX LOCKSETS ON SHARED RESTROOM

DRAWING TYPE: RISER DIAGRAM

DWG NO: 109529

DRAWN/CHECKED BY: B DOVE

REV A

THIS DIAGRAM REPRESENTS A GENERIC CONFIGURATION. CUSTOM WIRING DIAGRAMS CAN BE ACQUIRED BY CONTACTING TECHNICAL SUPPORT.

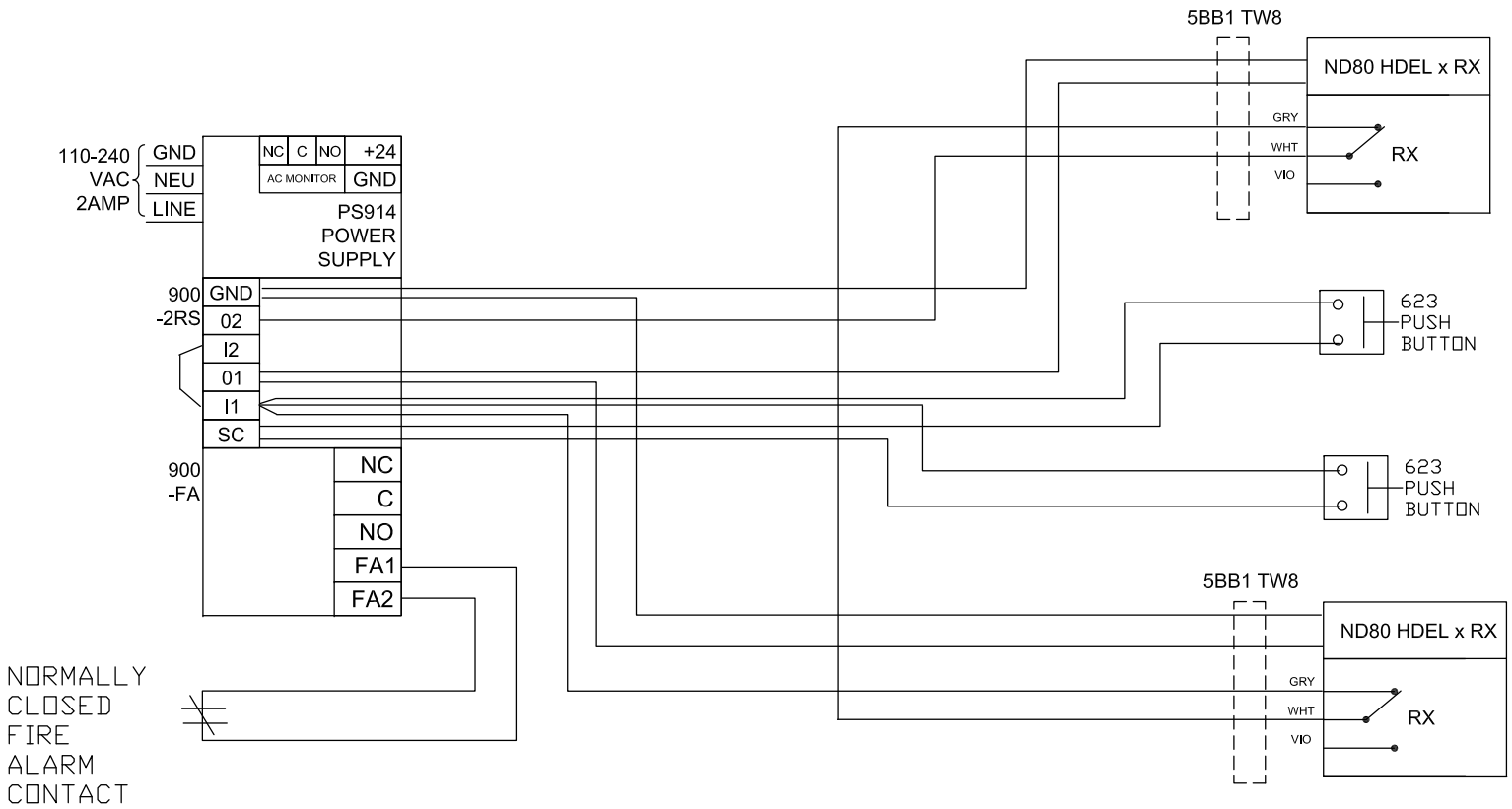

NOTES:
1) ALL LOW VOLTAGE WIRING TO BE STANDARD, MULTI-CONDUCTOR COLOR CODED WITHOUT SPLICES.

2) WIRING TO CONFORM TO APPLICABLE NATIONAL, STATE AND LOCAL ELECTRICAL CODES.

3) REFER TO SPECIFIC PRODUCT INSTALLATION INSTRUCTIONS FOR SPESCIFIC WIRING REQUIREMENTS.

4) THIS DRAWING IS FOR GRAPHICAL REPRESENTATION OF PRODUCTS DETAILED IN THE HARDWARE SET ONLY.

5) ADDITIONAL WIRING WILL BE REQUIRED FROM ACP THAT IS NOT SHOWN HERE. CONSULT PROVIDER FOR DETAILS.

HARDWARE USED:

1 PS902-2RS-FA

2 623 PUSHBUTTONS

2 5BB1 TW8 HINGES

2 ND80 HDEL X RX LOCKSETS

1 FIRE ALARM CONTACT BY BUILDING SYSTEM

TYPE

SHARED RESTROOM

OPERATION:
COMMON RESTROOM SHARED BY 2 ROOMS.

DOORS NORMALLY UNLOCKED.

UPON ENTERING RESTROOM ONE OF THE MOMENTARY 623 PUSHBUTTONS WILL BE PRESSED TO LOCK BOTH DOORS.

LEAVING THE RESTROOM - WHEN EITHER LEVER IS USED TO EXIT. RX SWITCH IN LEVER WILL ELECTRICALLY UNLOCK BOTH DOORS.

FIRE ALARM ACTIVATION WILL CAUSE BOTH ND EL LOCKS TO UNLOCK.

IN THIS EXAMPLE ALL WIRING CONNECTIONS ARE MADE IN THE PS902 POWER SUPPLY.

DATE DRAWN: 4-25-13

REVISION DATE: 4-25-13

copyright 2013

ALLEGION™

TITLE: ND80 HDEL X RX LOCKSETS ON SHARED RESTROOM

DRAWING TYPE: WIRING DIAGRAM

DWG NO: 109529

DRAWN/CHECKED BY: B DOVE

REV A

THIS DIAGRAM REPRESENTS A GENERIC CONFIGURATION. CUSTOM WIRING DIAGRAMS CAN BE ACQUIRED BY CONTACTING TECHNICAL SUPPORT.

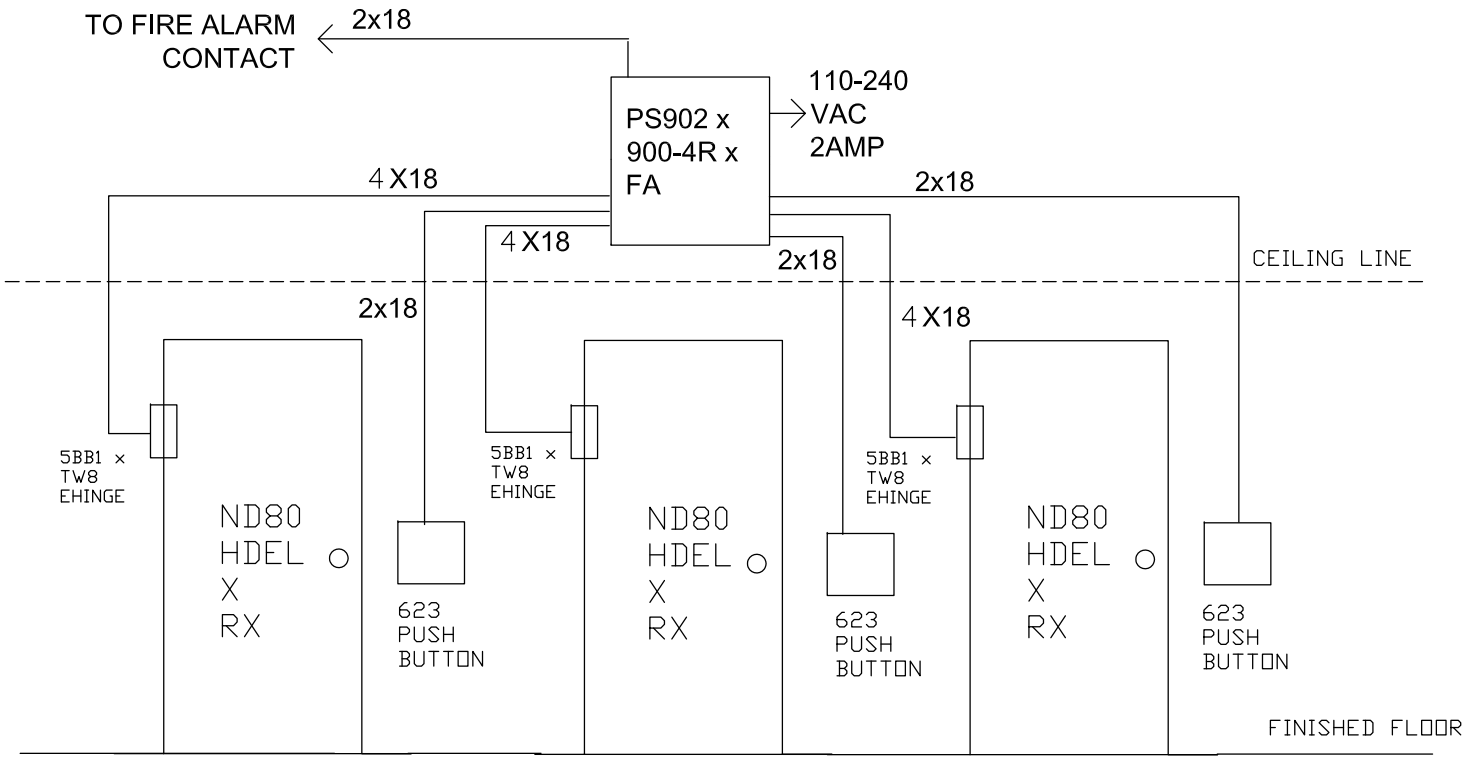

NOTES:
1) ALL LOW VOLTAGE WIRING TO BE STANDARD, MULTI-CONDUCTOR COLOR CODED WITHOUT SPLICES.

2) WIRING TO CONFORM TO APPLICABLE NATIONAL, STATE AND LOCAL ELECTRICAL CODES.

3) REFER TO SPECIFIC PRODUCT INSTALLATION INSTRUCTIONS FOR SPESCIFIC WIRING REQUIREMENTS.

4) THIS DRAWING IS FOR GRAPHICAL REPRESENTATION OF PRODUCTS DETAILED IN THE HARDWARE SET ONLY.

5) ADDITIONAL WIRING WILL BE REQUIRED FROM ACP THAT IS NOT SHOWN HERE. CONSULT PROVIDER FOR DETAILS.

HARDWARE USED:

1 PS902-4R-FA

3 623 PUSHBUTTONS

3 5BB1 TW8 EHINGES

3 ND80 HDEL X RX LOCKSETS

1 FIRE ALARM CONTACT BY BUILDING SYSTEM

TYPE: SHARED RESTROOM - 3 DOORS

OPERATION:
COMMON RESTROOM SHARED BY 3 ROOMS.

DOORS NORMALLY UNLOCKED.

UPON ENTERING RESTROOM ONE OF THE MOMENTARY 623 PUSHBUTTONS WILL BE PRESSED TO LOCK ALL DOORS.

LEAVING THE RESTROOM - WHEN ANY LEVER IS USED TO EXIT. RX SWITCH IN LEVER WILL ELECTRICALLY UNLOCK ALL DOORS.

FIRE ALARM ACTIVATION TO CAUSE ALL ND EL LOCKS TO UNLOCK.

IN THIS EXAMPLE ALL WIRING CONNECTIONS ARE MADE IN THE PS902 POWER SUPPLY.

DATE DRAWN: 4-30-13

REVISION DATE: 4-30-13

copyright 2013

ALLEGION™

TITLE: 3 ND80 HDEL X RX LOCKSETS ON SHARED RESTROOM

DRAWING TYPE: RISER DIAGRAM

DWG NO: 109537

DRAWN/CHECKED BY: B DOVE

REV A

THIS DIAGRAM REPRESENTS A GENERIC CONFIGURATION. CUSTOM WIRING DIAGRAMS CAN BE ACQUIRED BY CONTACTING TECHNICAL SUPPORT.

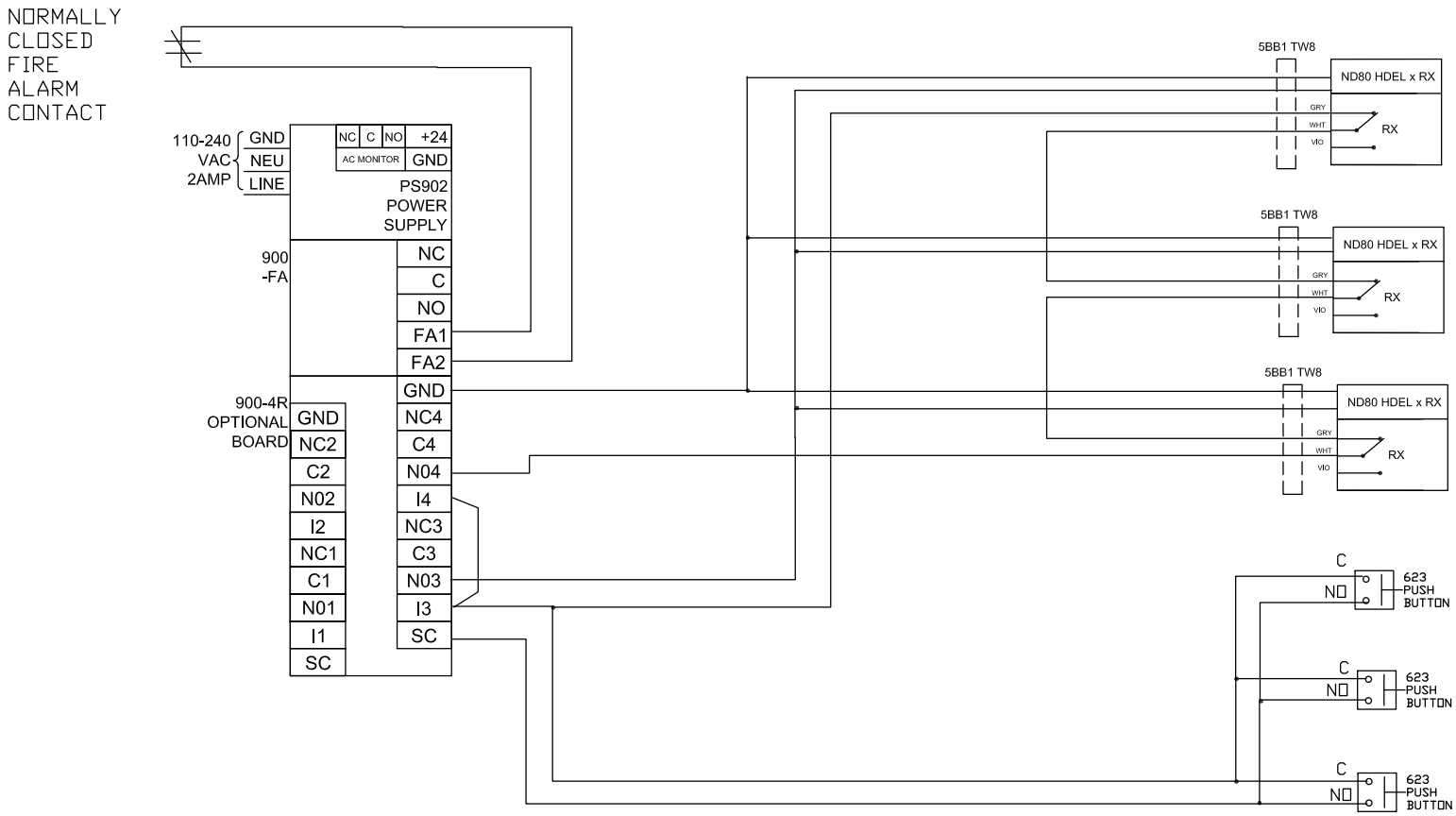

NOTES:
1) ALL LOW VOLTAGE WIRING TO BE STANDARD, MULTI-CONDUCTOR COLOR CODED WITHOUT SPLICES.

2) WIRING TO CONFORM TO APPLICABLE NATIONAL, STATE AND LOCAL ELECTRICAL CODES.

3) REFER TO SPECIFIC PRODUCT INSTALLATION INSTRUCTIONS FOR SPESCIFIC WIRING REQUIREMENTS.

4) THIS DRAWING IS FOR GRAPHICAL REPRESENTATION OF PRODUCTS DETAILED IN THE HARDWARE SET ONLY.

5) ADDITIONAL WIRING WILL BE REQUIRED FROM ACP THAT IS NOT SHOWN HERE. CONSULT PROVIDER FOR DETAILS.

HARDWARE USED:

1 PS902-4R-FA

3 623 PUSHBUTTONS

3 5BB1 TW8 EHINGES

3 ND80 HDEL X RX LOCKSETS

1 FIRE ALARM CONTACT BY BUILDING SYSTEM

TYPE SHARED RESTROOM - 3 DOORS

OPERATION:
COMMON RESTROOM SHARED BY 3 ROOMS.

DOORS NORMALLY UNLOCKED.

UPON ENTERING RESTROOM ONE OF THE MOMENTARY 623 PUSHBUTTONS WILL BE PRESSED TO LOCK ALL DOORS.

LEAVING THE RESTROOM - WHEN ANY LEVER IS USED TO EXIT. RX SWITCH IN LEVER WILL ELECTRICALLY UNLOCK ALL DOORS.

FIRE ALARM ACTIVATION TO CAUSE ALL ND EL LOCKS TO UNLOCK.

IN THIS EXAMPLE ALL WIRING CONNECTIONS ARE MADE IN THE PS902 POWER SUPPLY.

DATE DRAWN: 4-30-13

REVISION DATE: 4-30-13

copyright 2013

ALLEGION™

TITLE: 3 ND80 HDEL X RX LOCKSETS ON SHARED RESTROOM

DRAWING TYPE: WIRING DIAGRAM

DWG NO: 109537

DRAWN/CHECKED BY: B DOVE

REV A

THIS DIAGRAM REPRESENTS A GENERIC CONFIGURATION. CUSTOM WIRING DIAGRAMS CAN BE ACQUIRED BY CONTACTING TECHNICAL SUPPORT.

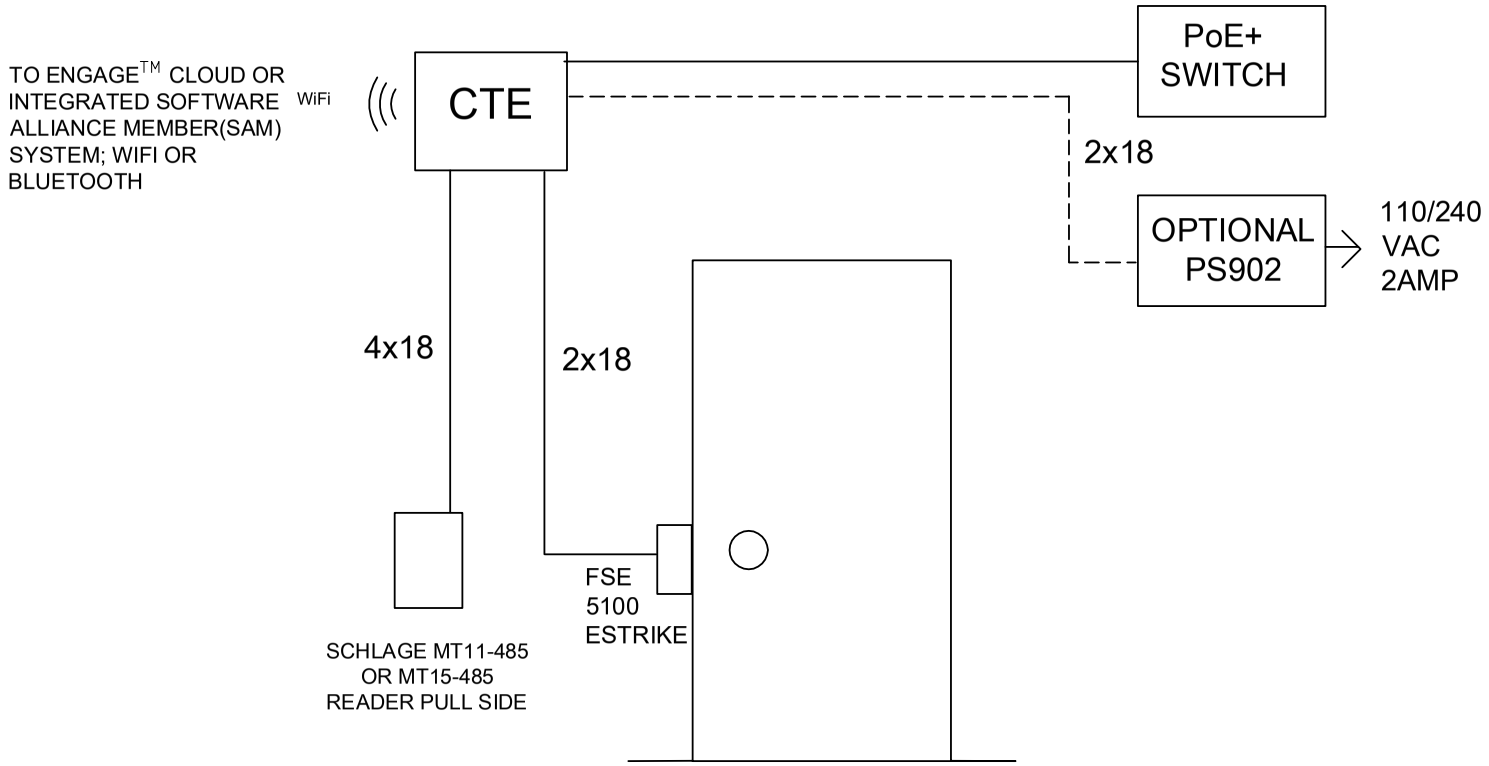

NOTES:
1) ALL LOW VOLTAGE WIRING TO BE STANDARD, MULTI-CONDUCTOR COLOR CODED WITHOUT SPLICES.

2) WIRING TO CONFORM TO APPLICABLE NATIONAL, STATE AND LOCAL ELECTRICAL CODES.

3) REFER TO SPECIFIC PRODUCT INSTALLATION INSTRUCTIONS FOR SPECIFIC WIRING REQUIREMENTS.

4) THIS DRAWING IS FOR GRAPHICAL REPRESENTATION OF PRODUCTS DETAILED IN THE HARDWARE SET ONLY.

5) ADDITIONAL WIRING WILL BE REQUIRED FROM ACP THAT IS NOT SHOWN HERE. CONSULT PROVIDER FOR DETAILS.

HARDWARE USED:
1 CTE
1 MT11-485 OR MT15-485 SCHLAGE READER
1 VD 5100 ESTRIKE
1 PoE+ SWITCH
1 OPTIONAL PS902

TYPE PoE+ CTE ACCESS CONTROL WITH 5100 ESTRIKE - BASIC

OPERATION:
SCHLAGE MT11-485 OR MT15-485 READER TO RELEASE FSE 5100 ESTRIKE TO ALLOW ENTRY.

CTE CAN BE USED WITH ENGAGE™ CLOUD OR SOFTWARE ALLIANCE MEMBER (SAM) SYSTEM

VERIFY PoE+ POWER SOURCE APPROPRIATE TO HANDLE LOAD AT OPENING. ADDITIONAL WIRING WILL BE REQUIRED THAT IS NOT SHOWN HERE.

FREE EGRESS ALWAYS PERMITTED.

THIS IS NOT A FIRE RATED APPLICATION

DATE DRAWN: 08-21-17
REVISION DATE: 08-21-17

ALLEGION™

TITLE: PoE+ CTE WITH 5100 ESTRIKE BASIC CONFIGURATION

DRAWING TYPE:
DWG NO: 112089
DRAWN/CHECKED BY: BRENDA DOVE
REV A

THIS DIAGRAM REPRESENTS A GENERIC CONFIGURATION. CUSTOM WIRING DIAGRAMS CAN BE ACQUIRED BY CONTACTING TECHNICAL SUPPORT.

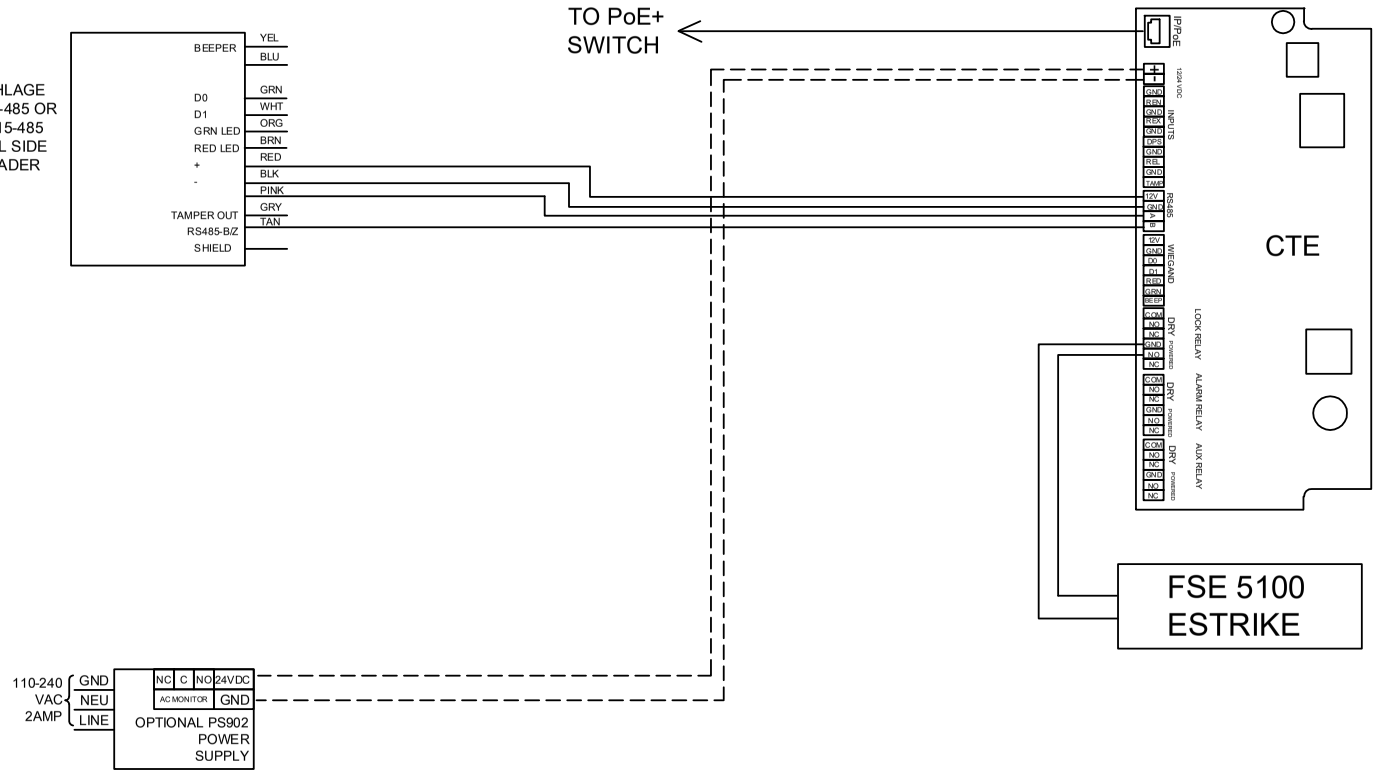

NOTES:
1) ALL LOW VOLTAGE WIRING TO BE STANDARD, MULTI-CONDUCTOR COLOR CODED WITHOUT SPLICES.

2) WIRING TO CONFORM TO APPLICABLE NATIONAL, STATE AND LOCAL ELECTRICAL CODES.

3) REFER TO SPECIFIC PRODUCT INSTALLATION INSTRUCTIONS FOR SPECIFIC WIRING REQUIREMENTS.

4) THIS DRAWING IS FOR GRAPHICAL REPRESENTATION OF PRODUCTS DETAILED IN THE HARDWARE SET ONLY.

5) ADDITIONAL WIRING WILL BE REQUIRED FROM ACP THAT IS NOT SHOWN HERE. CONSULT PROVIDER FOR DETAILS.

HARDWARE USED:
1 CTE
1 MT11-485 OR MT15-485 SCHLAGE READER
1 VD 5100 ESTRIKE
1 PoE+ SWITCH
1 OPTIONAL PS902

TYPE PoE+ CTE ACCESS CONTROL WITH 5100 ESTRIKE - BASIC

OPERATION:
SCHLAGE MT11-485 OR MT15-485 READER TO RELEASE FSE 5100 ESTRIKE TO ALLOW ENTRY.

CTE CAN BE USED WITH ENGAGE™ CLOUD OR SOFTWARE ALLIANCE MEMBER (SAM) SYSTEM

VERIFY PoE+ POWER SOURCE APPROPRIATE TO HANDLE LOAD AT OPENING. ADDITIONAL WIRING WILL BE REQUIRED THAT IS NOT SHOWN HERE.

FREE EGRESS ALWAYS PERMITTED.

THIS IS NOT A FIRE RATED APPLICATION

DATE DRAWN: 08-21-17
REVISION DATE: 08-21-17

ALLEGION™

TITLE: PoE+ CTE WITH 5100 ESTRIKE BASIC CONFIGURATION

DRAWING TYPE:
DWG NO: 112089W
DRAWN/CHECKED BY: BRENDA DOVE
REV A

THIS DIAGRAM REPRESENTS A GENERIC CONFIGURATION. CUSTOM WIRING DIAGRAMS CAN BE ACQUIRED BY CONTACTING TECHNICAL SUPPORT.

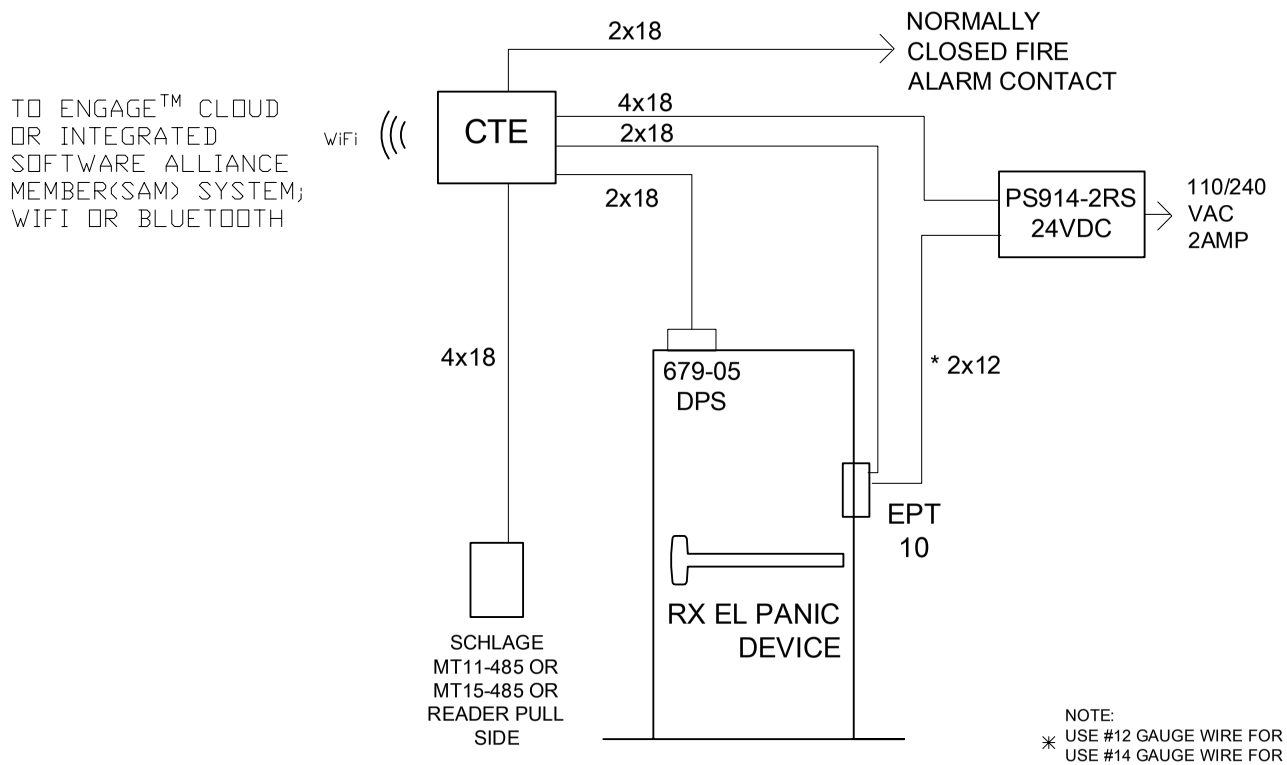

NOTE:
✳ USE #12 GAUGE WIRE FOR DISTANCES UP TO 200' FROM EPT TO PS914.
USE #14 GAUGE WIRE FOR DISTANCES UP TO 100' FROM EPT TO PS914.

NOTES:
1) ALL LOW VOLTAGE WIRING TO BE STANDARD, MULTI-CONDUCTOR COLOR CODED WITHOUT SPLICES.

2) WIRING TO CONFORM TO APPLICABLE NATIONAL, STATE AND LOCAL ELECTRICAL CODES.

3) REFER TO SPECIFIC PRODUCT INSTALLATION INSTRUCTIONS FOR SPECIFIC WIRING REQUIREMENTS.

4) THIS DRAWING IS FOR GRAPHICAL REPRESENTATION OF PRODUCTS DETAILED IN THE HARDWARE SET ONLY.

5) ✳ CONDUCTOR COUNT TO BE DETERMINED BY ACCESS CONTROL PANEL PROVIDER.

HARDWARE USED:
1 CTE
1 MT11-485 OR MT15-485 SCHLAGE READER
1 VD OR FALCON RX EL PANIC
1 EPT10
1 PS914-2RS
1 679-05 DPS

TYPE CTE ACCESS CONTROL WITH EL PANIC- FIRE RATED

OPERATION:
SCHLAGE MT11-485 OR MT15-485 READER TO SIGNAL EL TO RETRACT THE ELECTRIC LATCH ON PANIC BAR THROUGH THE CTE TO ALLOW ENTRY.

CTE CAN BE USED WITH ENGAGE™ CLOUD OR SOFTWARE ALLIANCE MEMBER (SAM) INTEGRATED SYSTEM.

FREE EGRESS ALWAYS PERMITTED.

FIRE ALARM TO EXTEND EL LATCH.

DATE DRAWN: 08-21-17
REVISION DATE: 08-21-17

ALLEGION™

TITLE: CTE WITH EL AND PS914-2RS - FIRE RATED

DRAWING TYPE: RISER DIAGRAM

DWG NO: 112090

DRAWN/CHECKED BY: BRENDA DOVE

REV A

THIS DIAGRAM REPRESENTS A GENERIC CONFIGURATION. CUSTOM WIRING DIAGRAMS CAN BE ACQUIRED BY CONTACTING TECHNICAL SUPPORT.

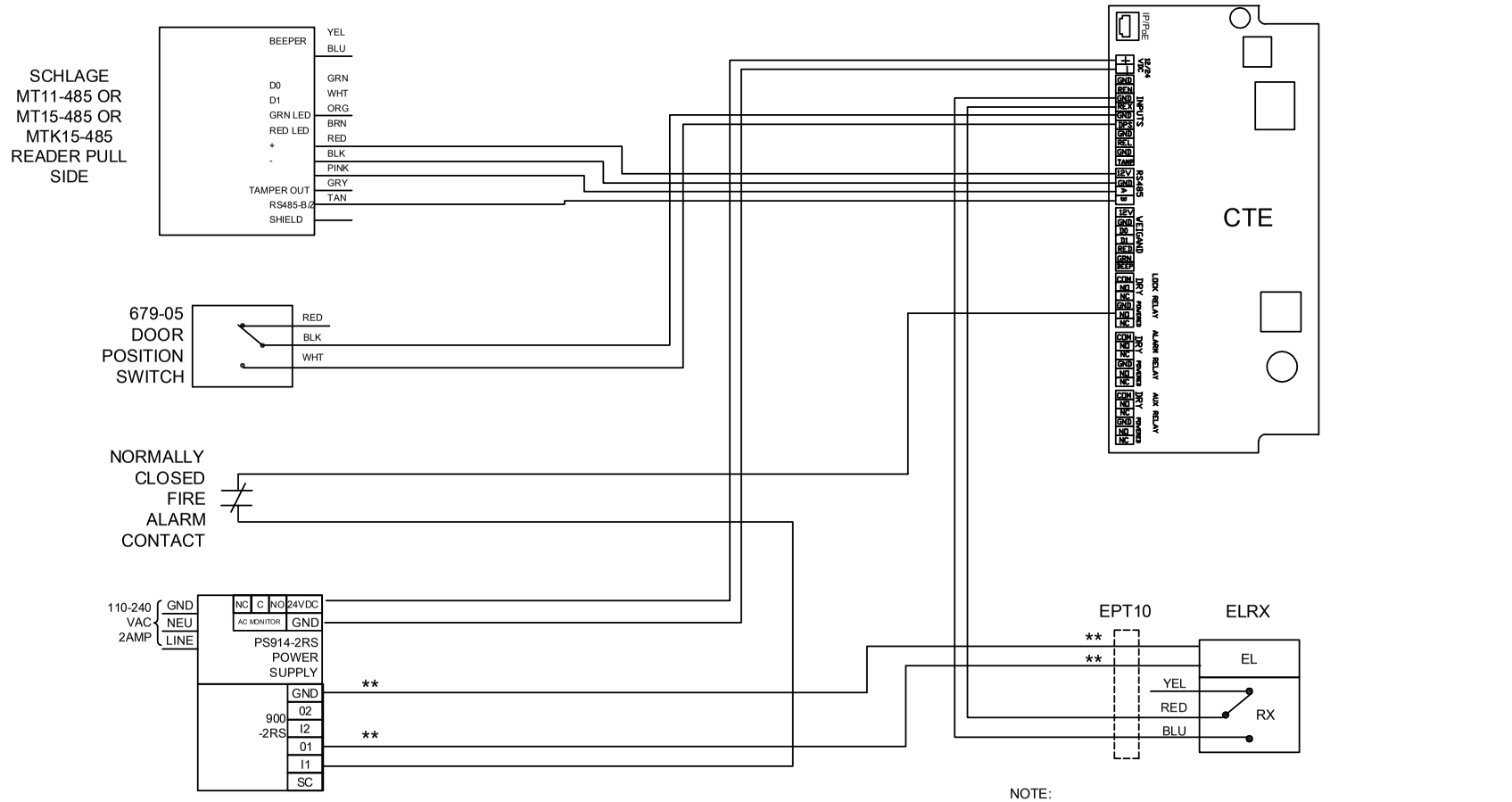

NOTE:
USE #12 GAUGE WIRE FOR DISTANCES UP TO 200' FROM EPT TO PS914.
USE #14 GAUGE WIRE FOR DISTANCES UP TO 100' FROM EPT TO PS914.

NOTES:
1) ALL LOW VOLTAGE WIRING TO BE STANDARD, MULTI-CONDUCTOR COLOR CODED WITHOUT SPLICES.

2) WIRING TO CONFORM TO APPLICABLE NATIONAL, STATE AND LOCAL ELECTRICAL CODES.

3) REFER TO SPECIFIC PRODUCT INSTALLATION INSTRUCTIONS FOR SPECIFIC WIRING REQUIREMENTS.

4) THIS DRAWING IS FOR GRAPHICAL REPRESENTATION OF PRODUCTS DETAILED IN THE HARDWARE SET ONLY.

5) ADDITIONAL WIRING WILL BE REQUIRED FROM ACP THAT IS NOT SHOWN HERE. CONSULT PROVIDER FOR DETAILS.

HARDWARE USED:

1 CTE
1 MT11-485 OR MT15-485 OR MTK15-485 SCHLAGE READER
1 VD OR FALCON RX EL PANIC
1 EPT10
1 PS914-2RS
1 679-05 DPS

TYPE CTE ACCESS CONTROL WITH EL PANIC-FIRE RATED

OPERATION:
SCHLAGE MT11-485 OR MT15-485 OR MTK15-485 READER TO SIGNAL EL TO RETRACT THE ELECTRIC LATCH ON PANIC BAR THROUGH THE CTE TO ALLOW ENTRY.

CTE CAN BE USED WITH ENGAGE ™ CLOUD OR SOFTWARE ALLIANCE MEMBER (SAM) INTEGRATED SYSTEM.

FREE EGRESS ALWAYS PERMITTED.

FIRE ALARM TO EXTEND EL LATCH.

DATE DRAWN: 08-21-17

REVISION DATE: 08-21-17

ALLEGION™

TITLE: CTE WITH EL AND PS914-2RS-FIRE RATED

DRAWING TYPE: WIRING DIAGRAM

DWG NO: 112090

DRAWN/CHECKED BY: BRENDA DOVE

REV A

THIS DIAGRAM REPRESENTS A GENERIC CONFIGURATION. CUSTOM WIRING DIAGRAMS CAN BE ACQUIRED BY CONTACTING TECHNICAL SUPPORT.

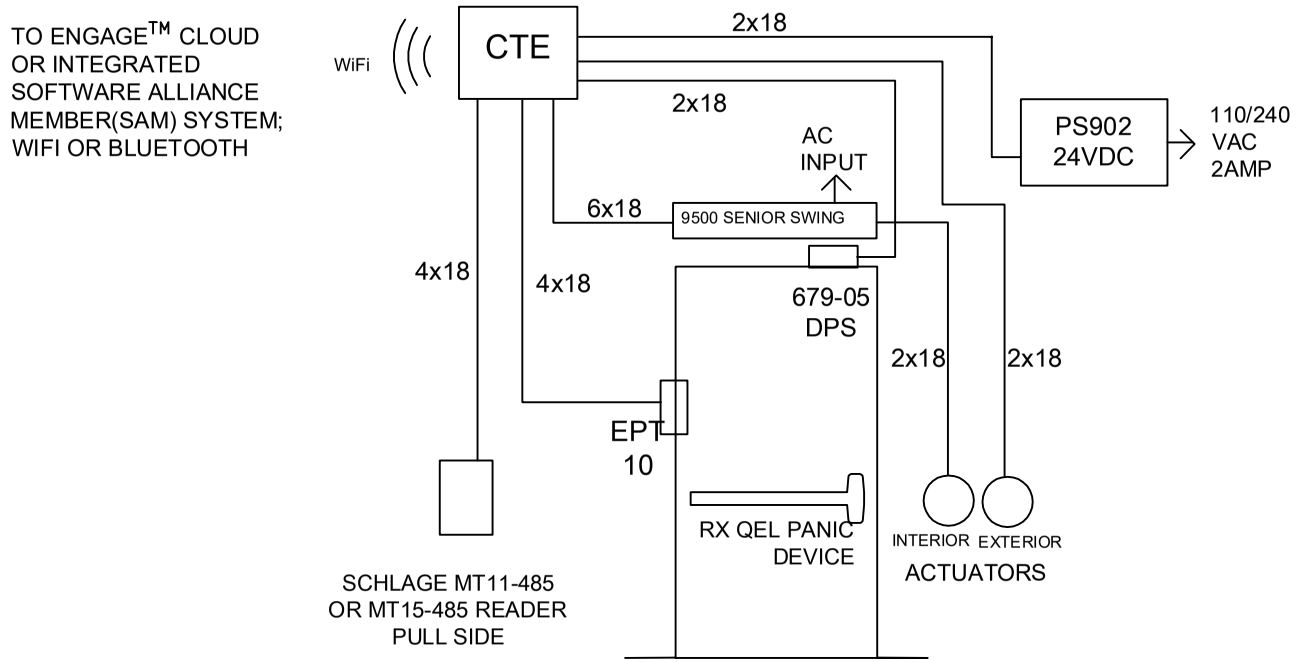

NOTES:
1) ALL LOW VOLTAGE WIRING TO BE STANDARD, MULTI-CONDUCTOR COLOR CODED WITHOUT SPLICES.

2) WIRING TO CONFORM TO APPLICABLE NATIONAL, STATE AND LOCAL ELECTRICAL CODES.

3) REFER TO SPECIFIC PRODUCT INSTALLATION INSTRUCTIONS FOR SPECIFIC WIRING REQUIREMENTS.

4) THIS DRAWING IS FOR GRAPHICAL REPRESENTATION OF PRODUCTS DETAILED IN THE HARDWARE SET ONLY.

5) * CONDUCTOR COUNT TO BE DETERMINED BY ACCESS CONTROL PANEL PROVIDER.

HARDWARE USED:
- 1 CTE
- 1 MT11-485 OR MT15-485 SCHLAGE READER
- 1 VD QEL PANIC
- 1 EPT 10
- 1 PS902
- 1 679-05 DPS
- 1 9500 SENIOR SWING
- 2 ACTUATORS

TYPE: CTE ACCESS CONTROL WITH QEL PANIC WITH SENIOR SWING AO

OPERATION:
SCHLAGE MT11-485 OR MT15-485 READER TO SIGNAL EL TO RETRACT THE ELECTRIC LATCH ON VON DUPRIN RX QEL PANIC BAR AND ENABLE EXTERIOR ACTUATOR TO ALLOW ENTRY. FREE EGRESS ALWAYS PERMITTED. INTERIOR ACTUATOR ALWAYS ACTIVE.

ADDITIONAL WIRING WILL BE REQUIRED THAT IS NOT SHOWN HERE.

CTE TO COMMUNICATE TO ENGAGE™ CLOUD OR SOFTWARE ALLIANCE MEMBER (SAM) SYSTEM

THIS IS NOT A FIRE RATED APPLICATION

DATE DRAWN: 08-24-17

REVISION DATE: 08-24-17

ALLEGION™

TITLE: CTE WITH QEL AND PS902 WITH 9500 SENIOR SWING AO

DRAWING TYPE: RISER DIAGRAM

DWG NO: 112091

DRAWN/CHECKED BY: BRENDA DOVE

REV: A

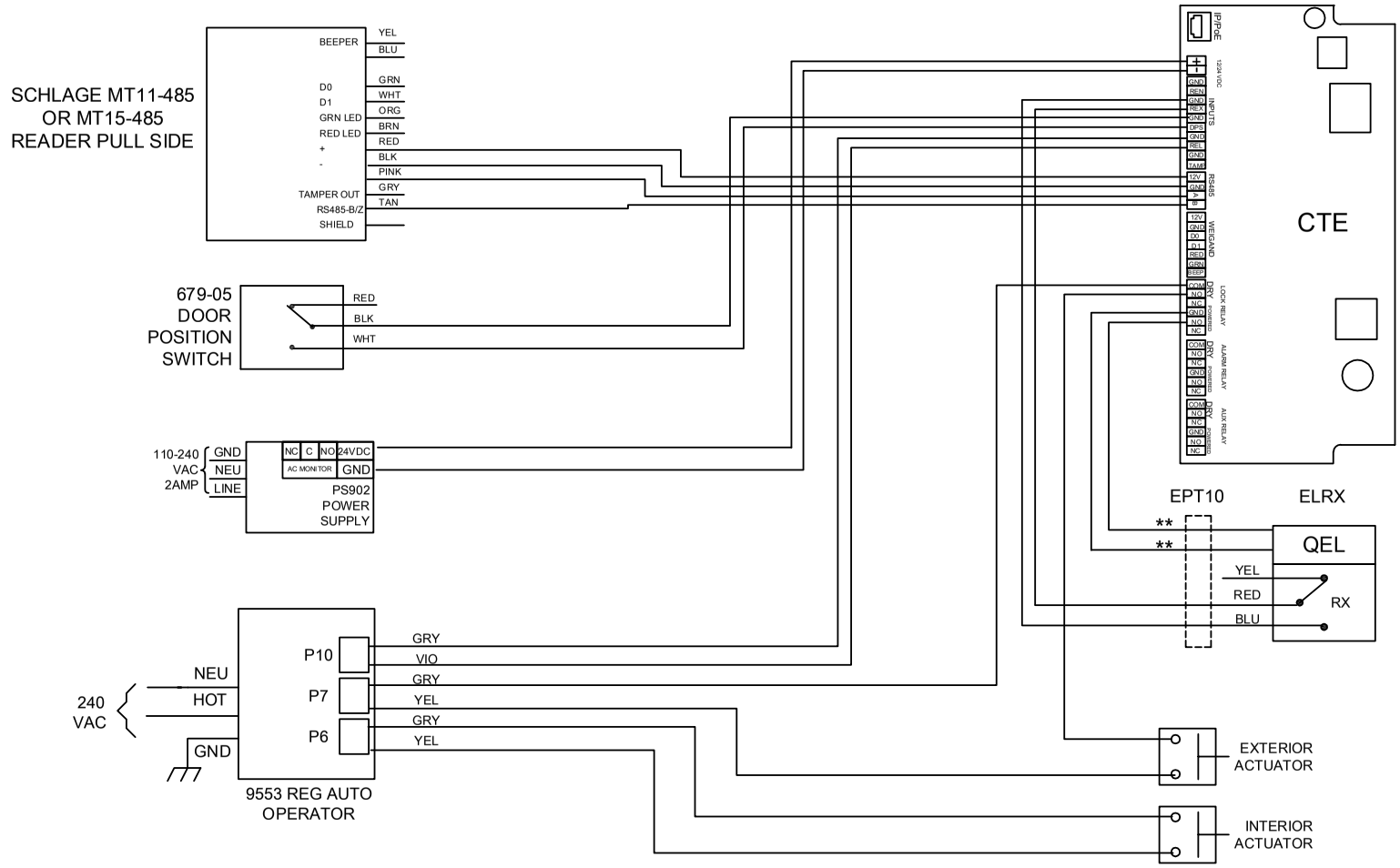

THIS DIAGRAM REPRESENTS A GENERIC CONFIGURATION. CUSTOM WIRING DIAGRAMS CAN BE ACQUIRED BY CONTACTING TECHNICAL SUPPORT.

** NOTE:
USE #18 GAUGE WIRE FOR DISTANCES UP TO 200' FROM EPT TO PS902

NOTES:
1) ALL LOW VOLTAGE WIRING TO BE STANDARD, MULTI-CONDUCTOR COLOR CODED WITHOUT SPLICES.

2) WIRING TO CONFORM TO APPLICABLE NATIONAL, STATE AND LOCAL ELECTRICAL CODES.

3) REFER TO SPECIFIC PRODUCT INSTALLATION INSTRUCTIONS FOR SPECIFIC WIRING REQUIREMENTS.

4) THIS DRAWING IS FOR GRAPHICAL REPRESENTATION OF PRODUCTS DETAILED IN THE HARDWARE SET ONLY.

5) ADDITIONAL WIRING WILL BE REQUIRED FROM ACP THAT IS NOT SHOWN HERE. CONSULT PROVIDER FOR DETAILS.

HARDWARE USED:
- 1 CTE
- 1 MT11-485 OR MT15-485 SCHLAGE READER
- 1 VD QEL PANIC
- 1 EPT 10
- 1 PS902
- 1 679-05 DPS
- 1 9500 SENIOR SWING
- 2 ACTUATORS

TYPE: CTE ACCESS CONTROL WITH QEL PANIC WITH SENIOR SWING AO

OPERATION:
SCHLAGE MT11-485 OR MT15-485 READER TO SIGNAL EL TO RETRACT THE ELECTRIC LATCH ON VON DUPRIN RX QEL PANIC BAR AND ENABLE EXTERIOR ACTUATOR TO ALLOW ENTRY. FREE EGRESS ALWAYS PERMITTED. INTERIOR ACTUATOR ALWAYS ACTIVE.

ADDITIONAL WIRING WILL BE REQUIRED THAT IS NOT SHOWN HERE.

CTE TO COMMUNICATE TO ENGAGE™ CLOUD OR SOFTWARE ALLIANCE MEMBER (SAM) SYSTEM

THIS IS NOT A FIRE RATED APPLICATION

DATE DRAWN: 08-24-17

REVISION DATE: 08-24-17

ALLEGION™

TITLE: CTE WITH QEL AND PS902 WITH 9500 SENIOR SWING AO

DRAWING TYPE: WIRING DIAGRAM

DWG NO: 112091

DRAWN/CHECKED BY: BRENDA DOVE

REV: A

About Allegion

Allegion (NYSE: ALLE) is a global pioneer in seamless access, with leading brands like CISA®, Interflex®, LCN®, Schlage®, SimonsVoss® and Von Duprin®. Focusing on security around the door and adjacent areas, Allegion secures people and assets with a range of solutions for homes, businesses, schools and institutions.

For more, visit **www.allegion.com**

KRYPTONITE ■ LCN ■ SCHLAGE ■ STEELCRAFT ■ VON DUPRIN

US.Allegion.com
© 2024 Allegion plc
005390, Rev. 10/24

ALLEGION™