Wall Mount
Soporte de pared
Fixation murale
Настенное крепление

WM-LS2-2 WM-LC2-2 WM-LH2-2
WM-LS3-2 WM-LC3-2 WM-LH3-2
WM-LS4-2 WM-LC4-2

WM-LH3-2

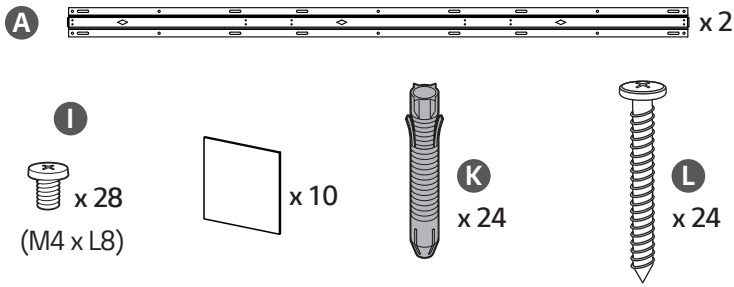

WM-LS3-2

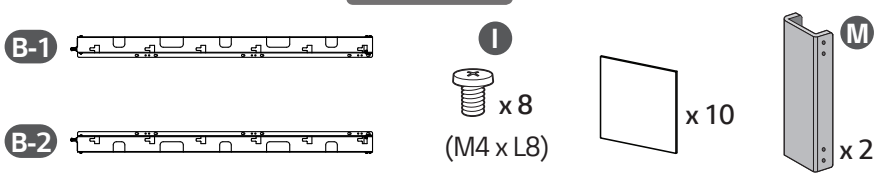

WM-LC3-2

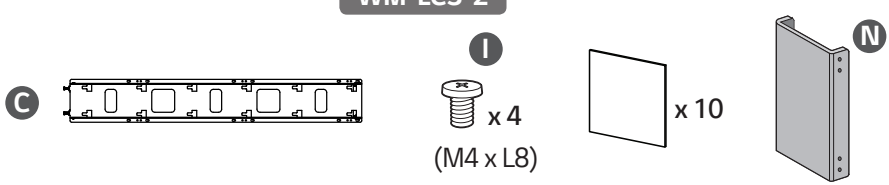

www.lg.com

Printed in Korea
Imprimé en Corée

WM-LH2-2

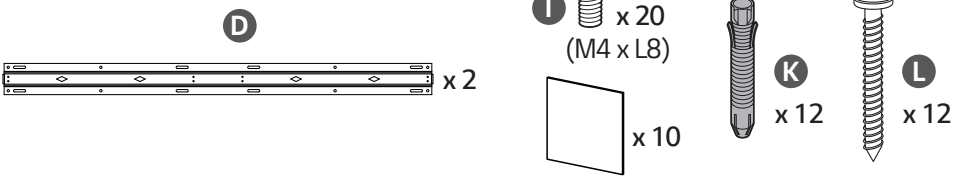

WM-LS2-2

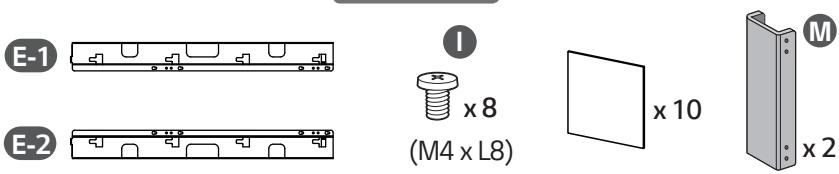

WM-LC2-2

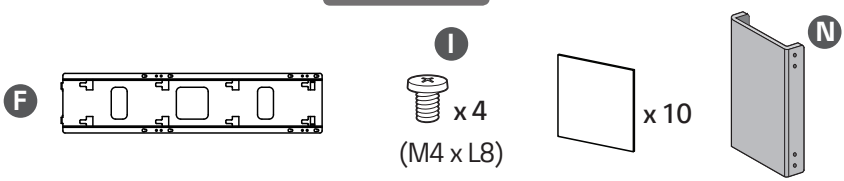

WM-LS4-2

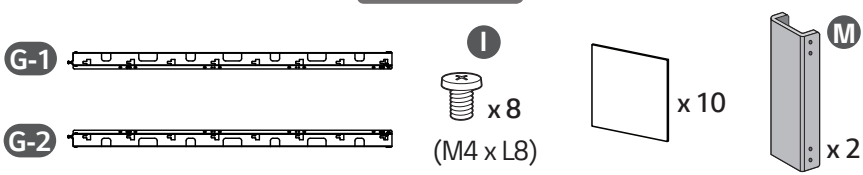

WM-LC4-2

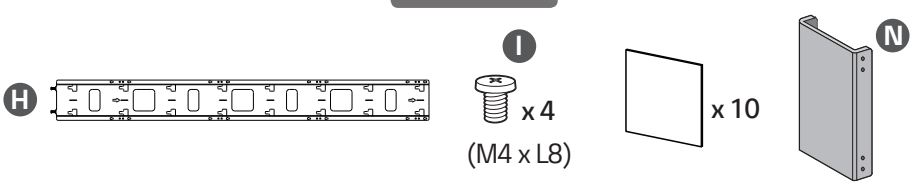

Unit: mm (inches)/ Unité: mm (po)

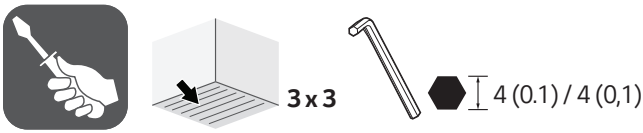

1

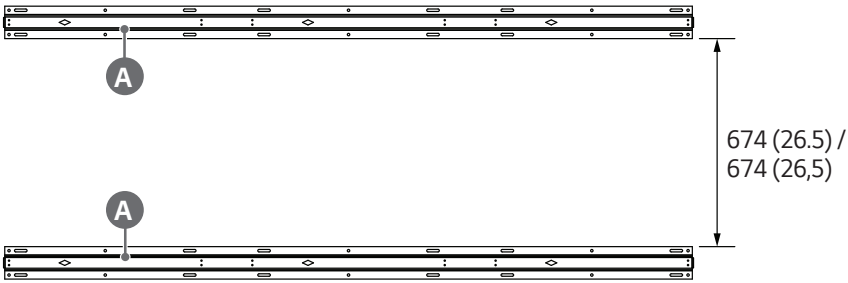

2

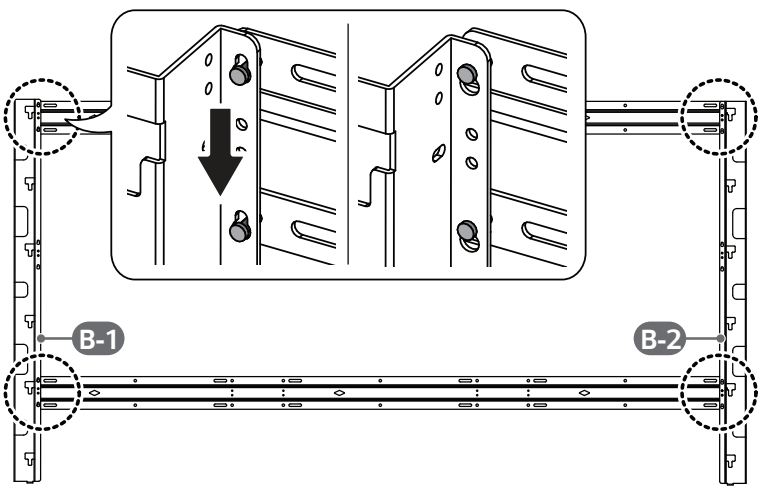

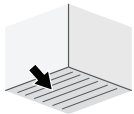

3 x 3

3

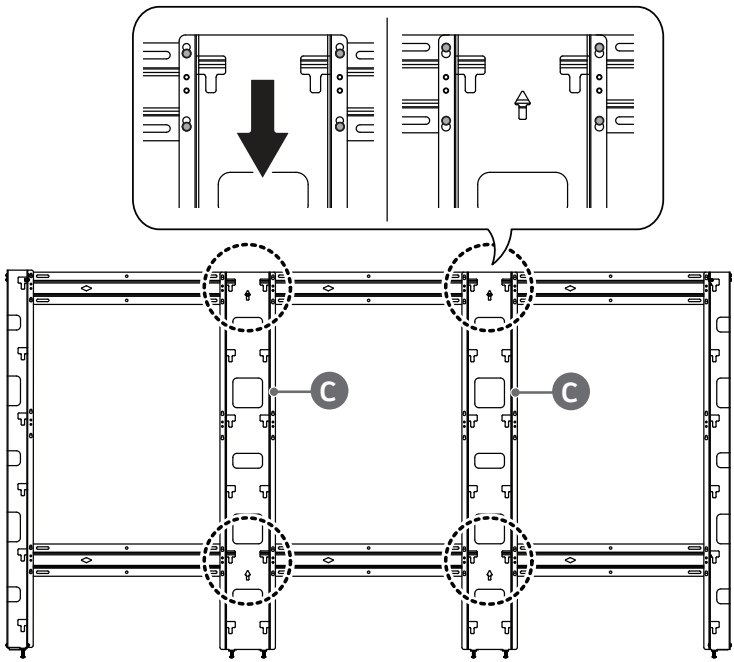

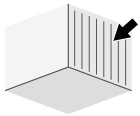

3 x 3

4

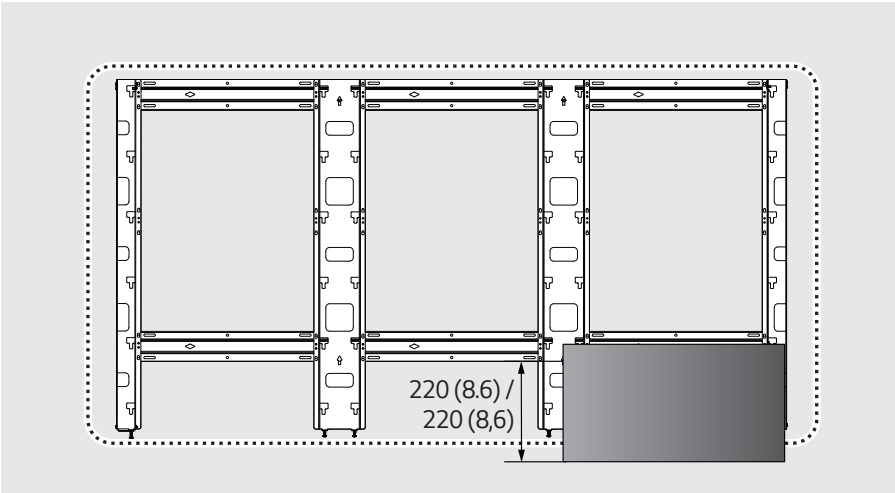

5

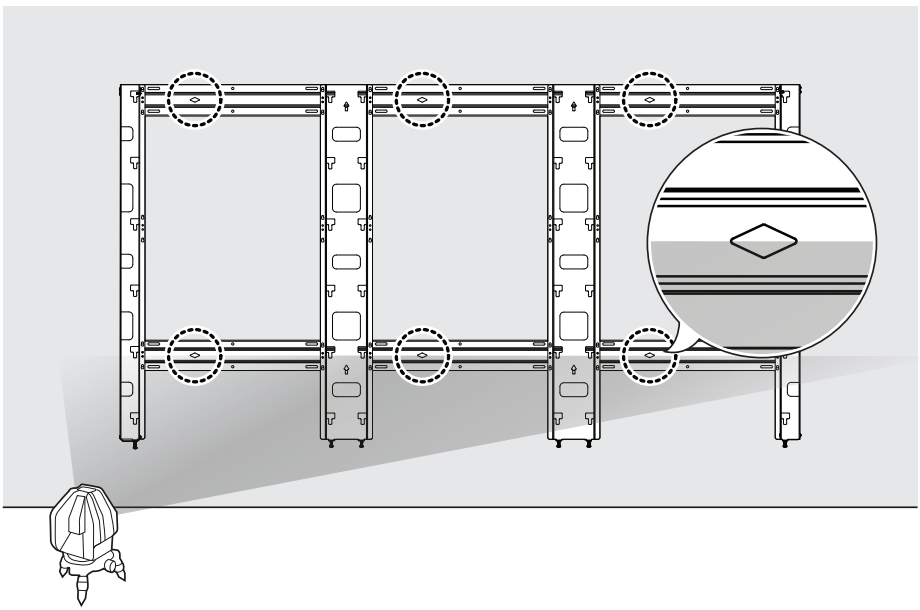

6

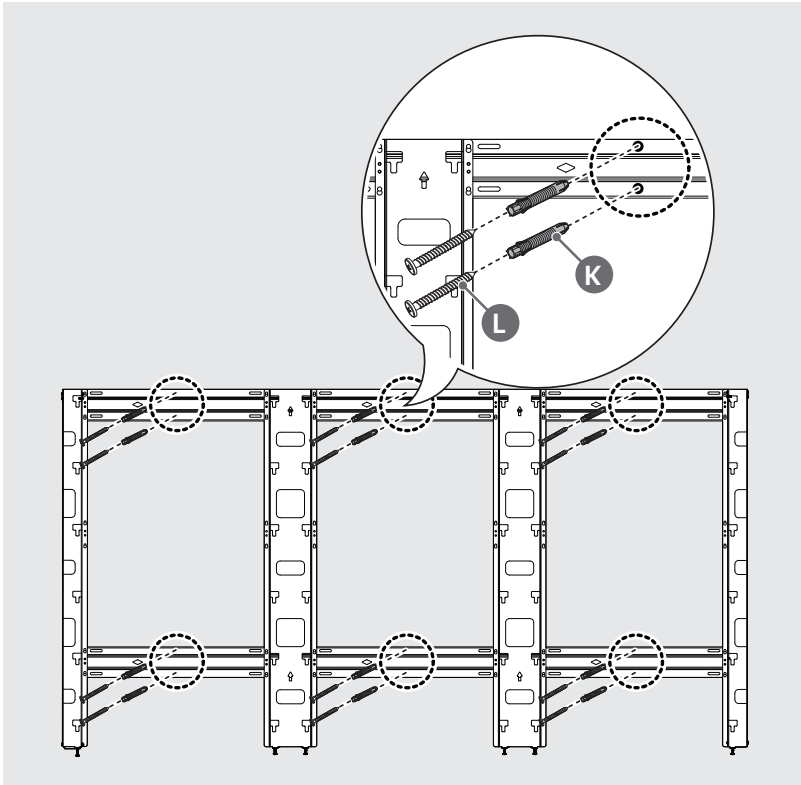

7

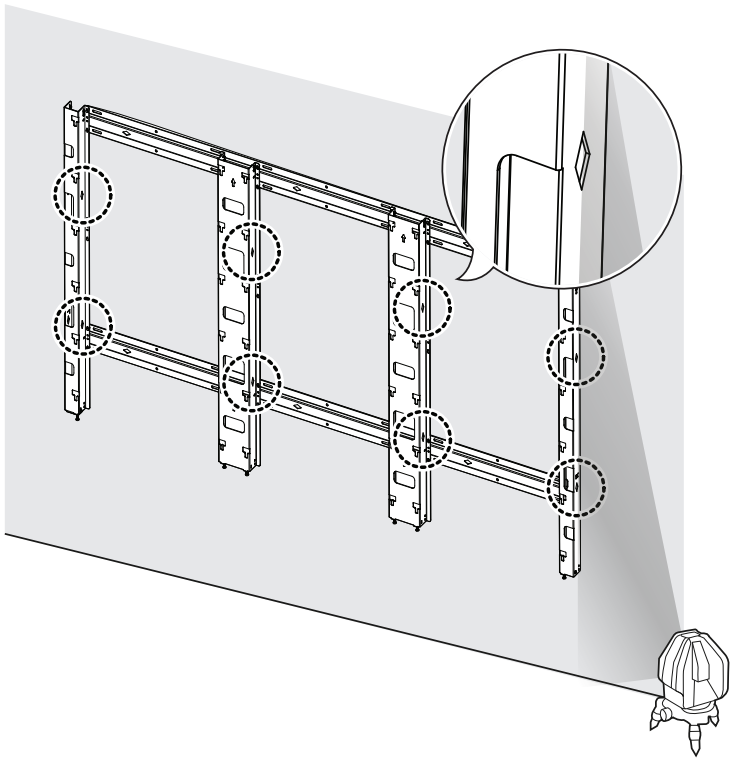

8

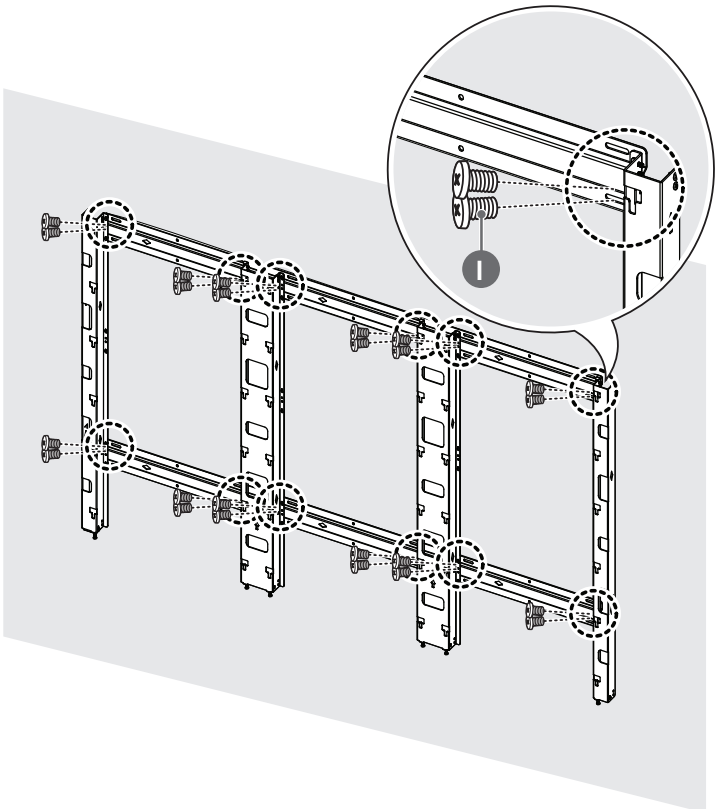

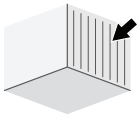

3 x 3

9

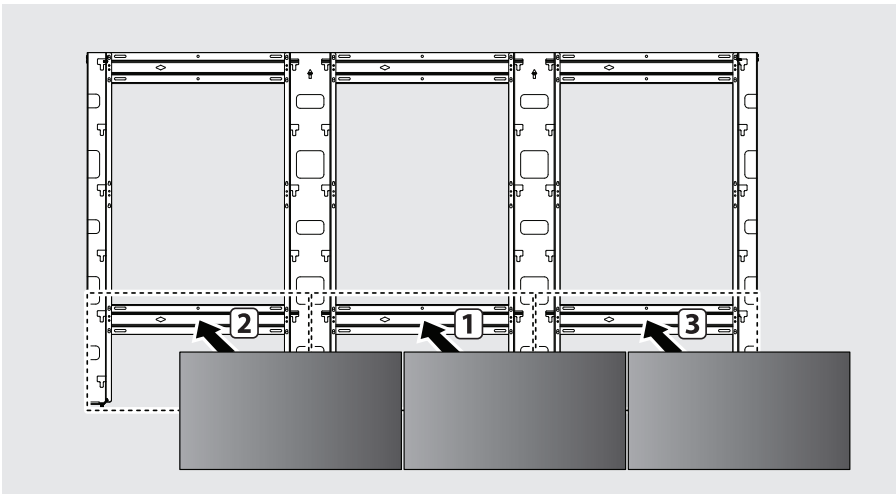

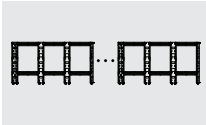

6 x 3

1

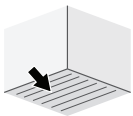

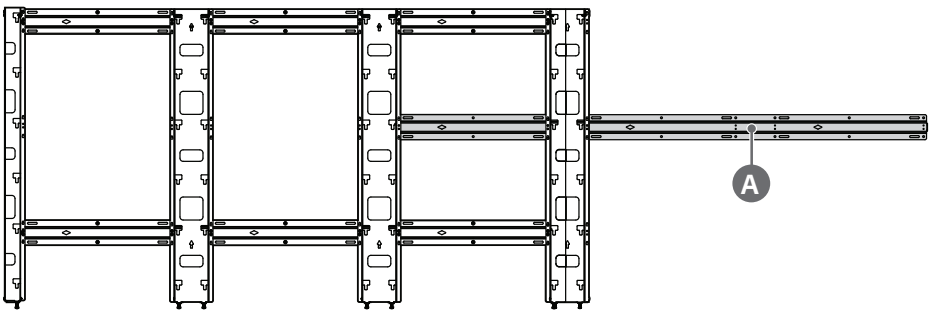

2

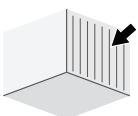

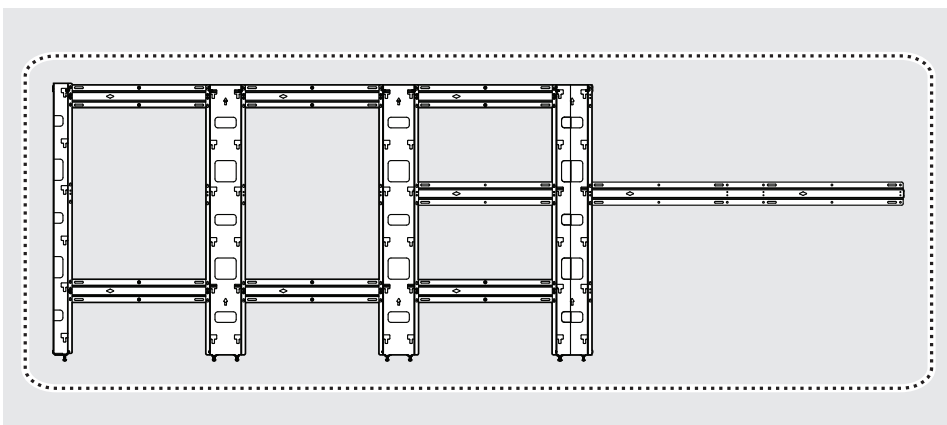

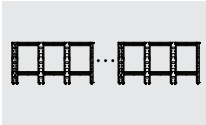

6 x 3

3

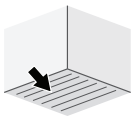

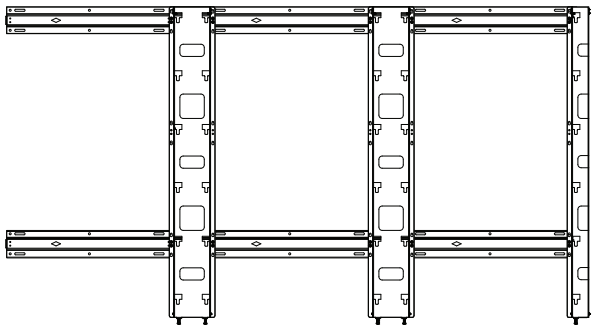

4

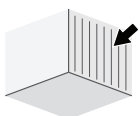

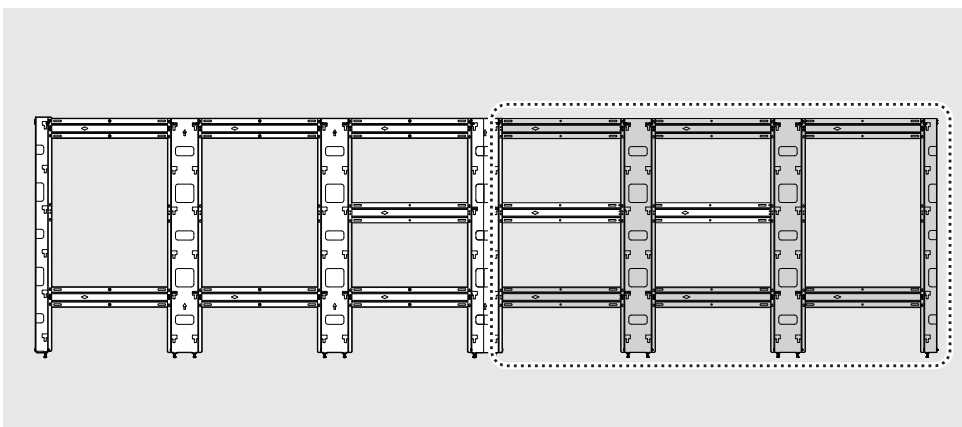

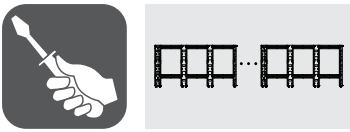

7 x 3

1

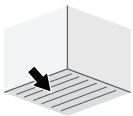

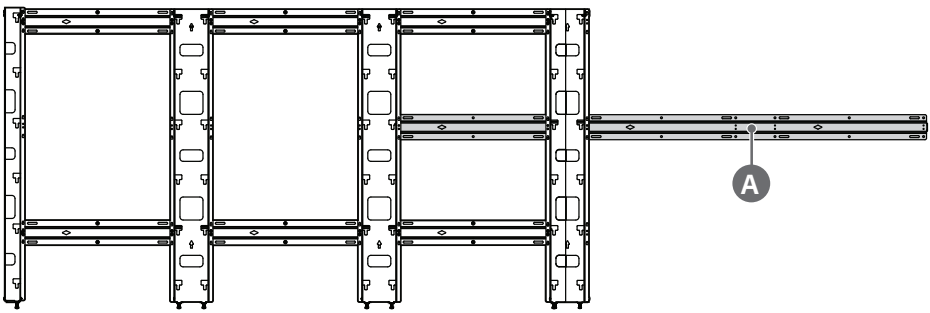

2

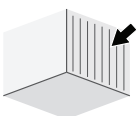

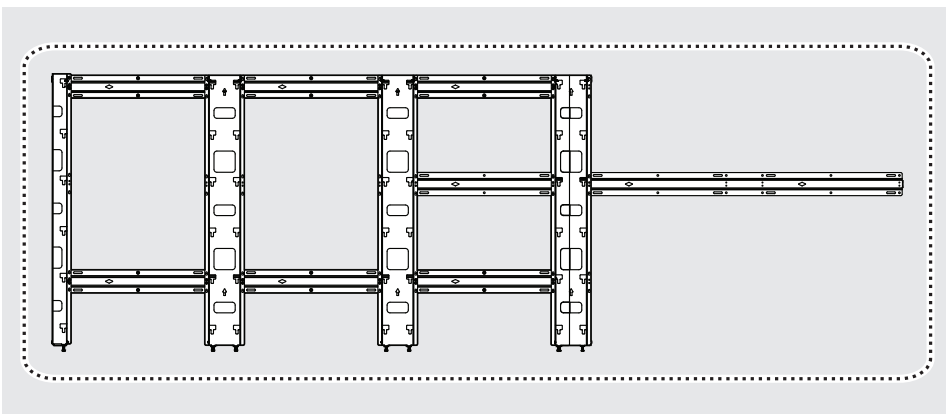

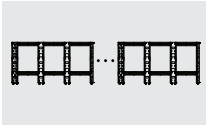

7 x 3

3

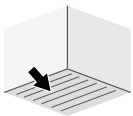

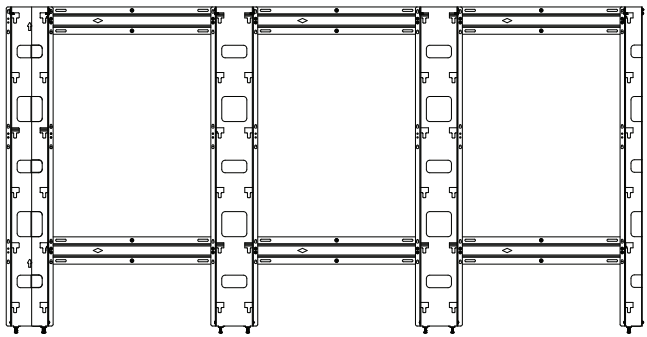

4

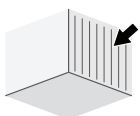

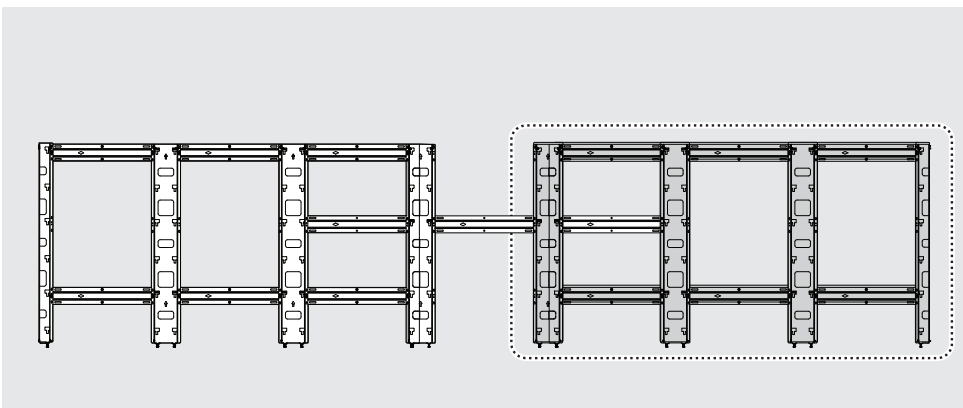

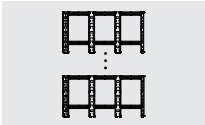

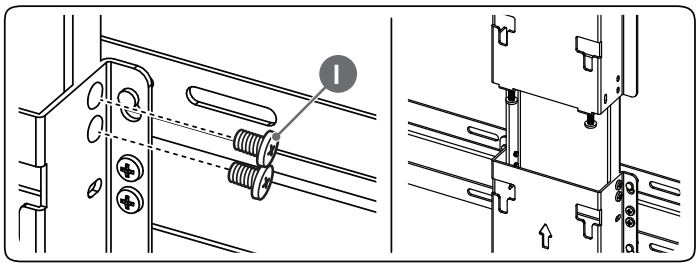
I

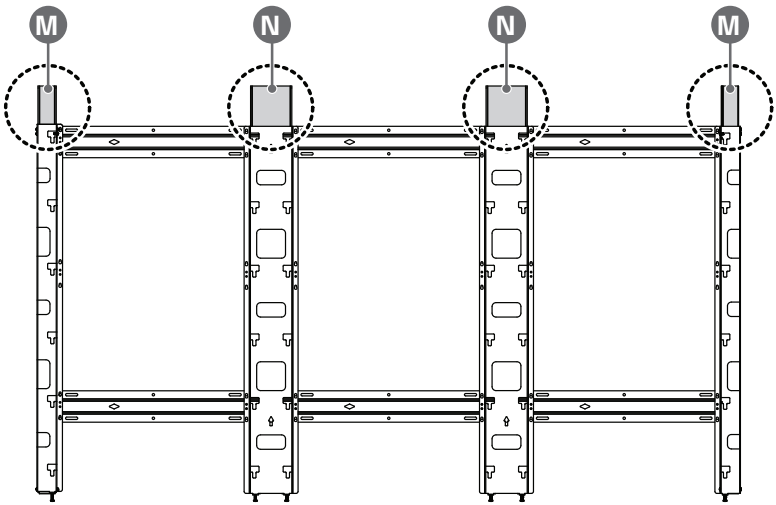
M
N
N
M

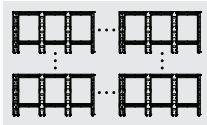

7 x 6

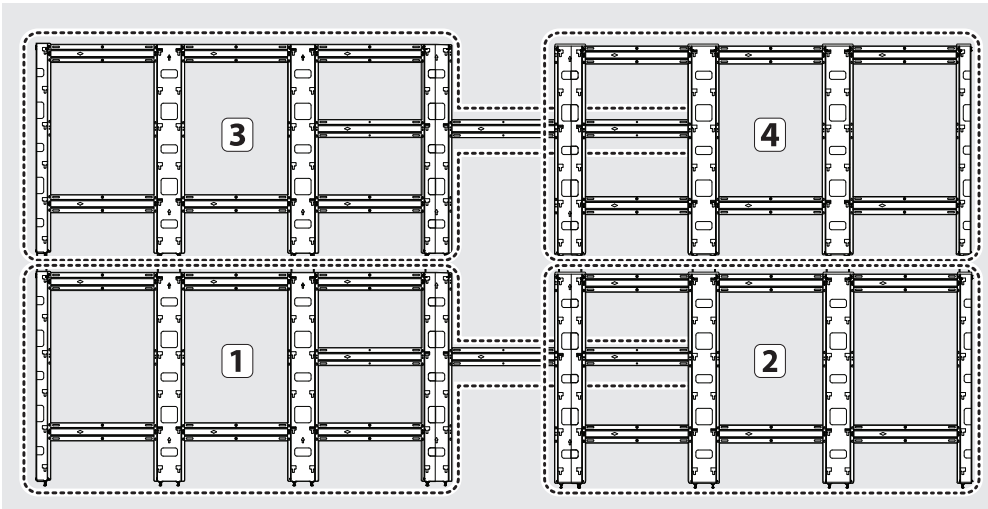

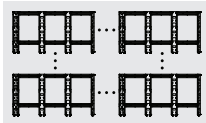

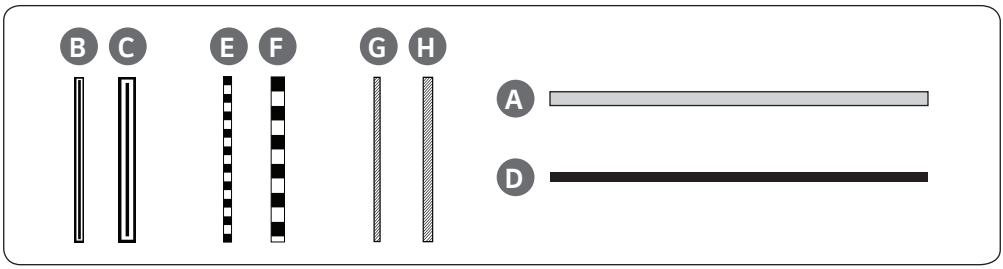

2 x 2

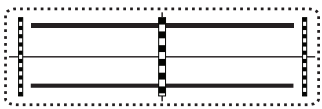

3 x 3

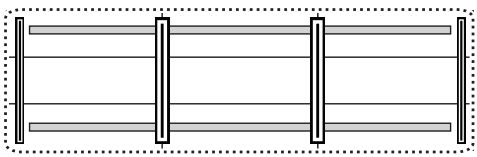

4 x 4

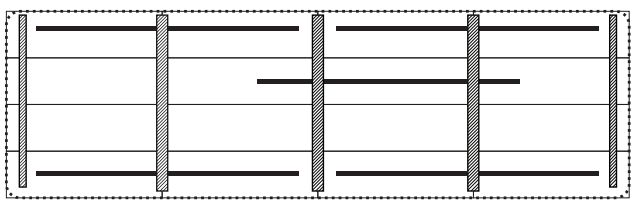

5 x 5

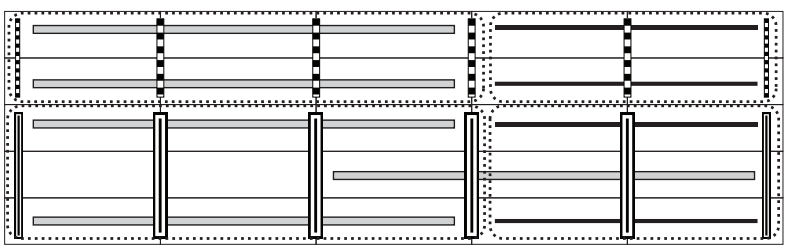

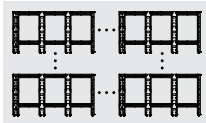

6 x 6

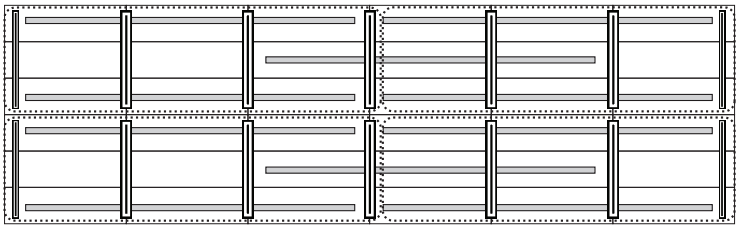

7 x 7

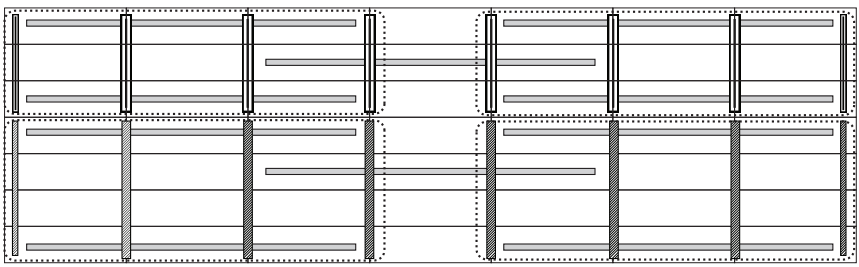

8 x 8

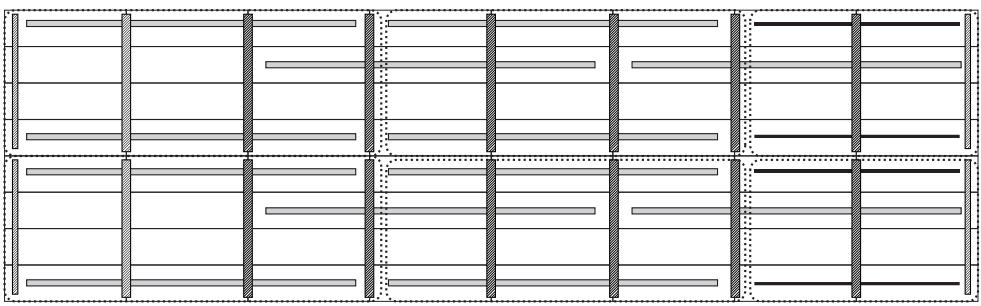

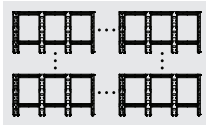

9 x 8

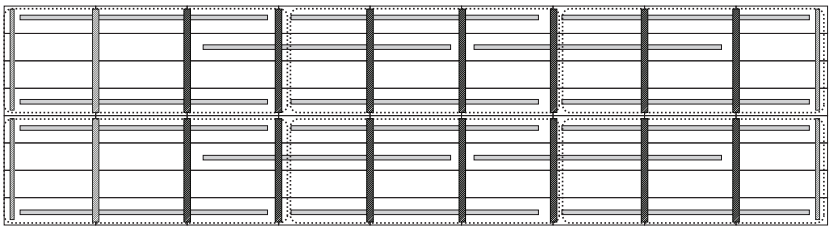

10 x 8

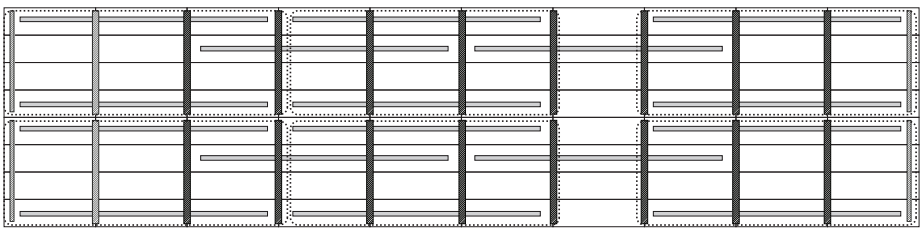

11 x 8

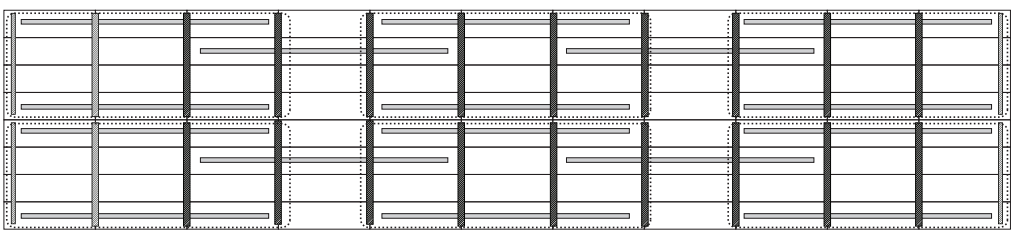

MFL71767551
(2410-REV02)

LG