Sarix Enhanced 4 and 4P Dome Installation Manual

Document number: C6754M

Publication date: 08/2024

Legal Notices

© 2024, Pelco Corporation. All rights reserved. PELCO, the PELCO logo, PELCO are trademarks of Pelco Corporation. ONVIF is a trademark of Onvif, Inc. Covered by one or more claims of the patents listed at patentlist.hevcadvance.com. Other names or logos mentioned herein may be the trademarks of their respective owners. The absence of the symbols ™ and ® in proximity to each trademark in this document or at all is not a disclaimer of ownership of the related trademark. Pelco Corporation protects its innovations with patents issued in the United States of America and other jurisdictions worldwide (see www.pelco.com). Unless stated explicitly and in writing, no license is granted with respect to any copyright, industrial design, trademark, patent or other intellectual property rights of Pelco Corporation or its licensors.

Disclaimer

This document has been compiled and published using product descriptions and specifications available at the time of publication. The contents of this document and the specifications of the products discussed herein are subject to change without notice. Pelco Corporation reserves the right to make any such changes without notice. Neither Pelco Corporation nor any of its affiliated companies: (1) guarantees the completeness or accuracy of the information contained in this document; or (2) is responsible for your use of, or reliance on, the information. Pelco Corporation shall not be responsible for any losses or damages (including consequential damages) caused by reliance on the information presented herein.

Pelco Corporation

www.pelco.com

C6754M

Revision: 3 - EN

20241118

Important Safety Information

WARNING

Failure to observe the following instructions may result in severe injury or death.

- Installation must be performed by qualified personnel only, and must conform to all local codes.
- Any external power supply connected to this product may only be connected to another Pelco product of the same model series. External power connections must be properly insulated.
- Do not connect directly to mains power for any reason.

CAUTION

Failure to observe the following instructions may result in injury to persons or damage to the device.

- ESD to the camera when it is operating could cause a temporary loss of video. When servicing the camera appropriate ESD mitigation procedures should be followed. The operator should remove any static by grounding themselves before servicing the camera.
- Do not expose the camera directly to high levels of x-ray, laser, or UV radiation. Direct exposure may cause permanent damage to the image sensor.
- Do not install near any heat sources such as radiators, heat registers, stoves, or other sources of heat.
- Do not subject the device cables to excessive stress, heavy loads or pinching.
- Do not open or disassemble the device. There are no user serviceable parts.
- Refer all device servicing to qualified personnel. Servicing may be required when the device has been damaged (such as from a liquid spill or fallen objects), has been exposed to rain or moisture, does not operate normally, or has been dropped.
- Do not use strong or abrasive detergents when cleaning the device body.
- Use only accessories recommended by Pelco.

Regulatory Notices

This device complies with part 15 of the FCC Rules. Operation is subject to the following two conditions: (1) this device may not cause harmful interference, and (2) this device must accept any interference received, including interference that may cause undesired operation.

This Class A digital apparatus complies with Canadian ICES-003 (A)/NMB-3(A).

This device complies with EN 60529 IP66, IP67 and IP68 rating.

This equipment has been tested and found to comply with the limits for a Class A digital device, pursuant to part 15 of the FCC Rules. These limits are designed to provide reasonable protection against harmful interference when the equipment is operated in a commercial environment. This equipment generates, uses, and can radiate radio frequency energy and, if not installed and used in accordance with the instruction manual, may cause harmful interference to radio communications. Operation of this equipment in a residential area is likely to cause harmful interference in which case the user will be required to correct the interference at his own expense.

Changes or modifications made to this equipment not expressly approved by Pelco Corporation or parties authorized by Pelco Corporation could void the user's authority to operate this equipment.

To meet the requirements of the EN 50121-4 Railway Applications Standard, use an external power supply or POE injector that is also compliant with EN 50121-4. Please contact Pelco for assistance regarding supporting equipment.

To meet the requirements of the EN 50130-4 Alarm Systems Applications standard, use an external uninterruptible power supply (UPS).

This equipment contains a coin cell battery. Risk of fire, explosion, and burns. Do not disassemble, crush, heat above 100°C (212°F), or incinerate.

The use of EMC compliant support and auxiliary equipment with this device is required in order to fully comply with the EMC regulatory standards.

This product is intended to be supplied by a UL Listed Power Unit marked "Class 2" or "LPS" or "Limited Power Source" with output rated 12-24 VDC, 25 W max. or Power over Ethernet (PoE), 25 W max.

UK Product Security and Telecommunications Infrastructure (PSTI) Act: Pelco cameras comply with the PSTI requirements. For more information, see the published PSTI Statement of Compliance.

For Korea

이 기기는 업무용(A급) 전자파 적합기기로서 판매자 또는 사용자는 이 점을 주의하시기 바라며,
가정외의 지역에서 사용하는 것을 목적으로 합니다.

Disposal and Recycling Information

When this product has reached the end of its useful life, please dispose of it according to your local environmental laws and guidelines.

European Union:

This symbol means that according to local laws and regulations your product should be disposed of separately from household waste. When this product reaches its end of life, take it to a collection point designated by local authorities. Some collection points accept products for free. The separate collection and recycling of your product at the time of disposal will help conserve natural resources and ensure that it is recycled in a manner that protects human health and the environment.

Table of Contents

Important Safety Information ... 3

Regulatory Notices ... 4

For Korea ... 5

Disposal and Recycling Information ... 5

Overview ... 1

Camera Module ... 1

Lens View ... 1

IR View ... 1

SD, Power, I/O and USB View ... 2

LED, Ethernet and Audio Switch View ... 3

Bottom View ... 4

Surface Mount ... 4

Complete View ... 4

Adapter View ... 5

In-Ceiling Mount ... 6

Complete View ... 6

Adapter View ... 6

Pendant Mount ... 7

Complete View ... 7

Adapter View ... 8

Wall Arm View ... 8

Preparing for Installation ... 10

Pre-Deployment In-Box Configuration ... 10

Removing the Dome Cover ... 10

Removing the Configuration Cable ... 10

Mounting and Aiming Video Analytics Cameras ... 11

Inserting Cables through the Sealing Grommet ... 11

Surface Mount Installation ... 13

Required Tools and Materials ... 13

Camera Package Contents ... 13

Installation Steps ... 13

Installing the Surface Adapter Using the Bottom Cable Entry Hole ... 13

Installing the Surface Adapter Using the Side Cable Entry Hole ... 14

Mounting the Dome Camera to the Surface Adapter ... 16

Connecting Cables 16
Installing the Dome Cover 17
Installing the Dome Cover for a Non-IR Dome Camera 17
Installing the Dome Cover for an IR Dome Camera 17

In-Ceiling Mount Installation 20
Required Tools and Materials 20
Camera Package Contents 20
Installation Steps 20
Mounting the Dome Camera Using the Ceiling Clamps 20
Connecting Cables 23
Installing the Dome Cover 23
Installing the Dome Cover for a Non-IR Dome Camera 23
Installing the Dome Cover for an IR Dome Camera 23

Pendant Mount Installation 26
Required Tools and Materials 26
Package Contents 26
Installation Steps 27
Installing the Pendant Wall Mount 27
Accessing Cables through the Bottom Conduit 29
(Optional) Installing the Pendant NPT Mount 31
Mounting the Dome Camera to the Pendant Wall Mount 32
Connecting Cables 34
Installing the Dome Cover 35
Installing the Dome Cover for a Non-IR Dome Camera 35
Installing the Dome Cover for an IR Dome Camera 35

Connecting a Camera to the Network 38
Initializing a Camera Username and Password 38
(Optional) Using the USB Wi-Fi Adapter 38
Assigning an IP Address 39
Accessing the Live Video Stream 39
Aiming the Dome Camera 39
Zooming and Focusing the Dome Camera 40
(Optional) Enabling the Microphone 41
(Optional) Configuring the Microphone 41
Configure the Microphone from the Camera Web Interface 41
(Optional) Configuring microSD Card Storage 41
Configuring the Camera 42

For More Information 42
Cable Connections 43
Connecting External Power 43
External Power Failover 43
Non-Seamless Failover for SRXE4 models 43
Seamless Failover for SRXE4P models 44
Connecting to External Devices 44
Connection Status LED Indicator 46
Troubleshooting Network Connections and LED Behavior 46
Resetting to Factory Default Settings 48
Cleaning 49
Dome Bubble 49
Body 49
Limited Warranty and Technical Support 50
Pelco Troubleshooting Contact Information 51

Overview

Camera Module

Lens View

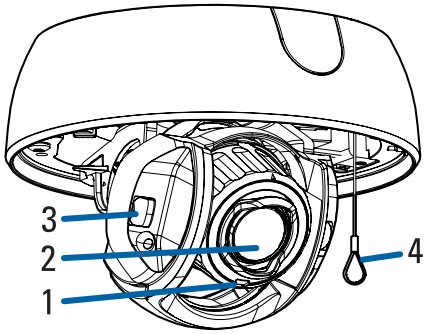

1. **Azimuth control**
   Provides control of the image angle.
2. **Camera lens**
   Lens that captures the video image.
3. **IR LEDs**
   IR illumination provides scene illumination in the IR spectrum.
4. **Lanyard**
   Connects to a lanyard hook on the cover.

IR View

For IR Dome camera models only.

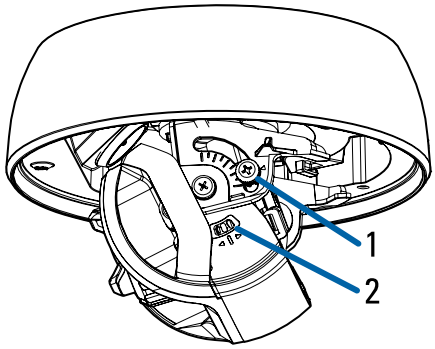

1. **Tilt lock thumb screw**
   Provides a locking mechanism for the image tilt adjustment.
2. **IR positioning indicator**
   Helps when aiming the IR LEDs. For more information, see *Aiming the Dome Camera* on page 39.

SD, Power, I/O and USB View

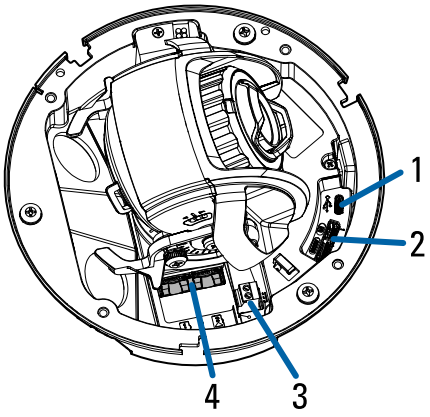

1. **USB-C**
   Accepts a USB type-C to USB adapter. Only required when using the *(Optional) Using the USB Wi-Fi Adapter* on page 38.
2. **I/O connector block**
   Provides connections to external input/output devices.
3. **Power connector block**
   Accepts a terminal block with a DC power connection. DC input can be either polarity. Only required when Power over Ethernet is not available.
4. **microSD card slot**
   Accepts a microSD card for onboard storage. For more information, see *(Optional) Configuring microSD Card Storage* on page 41.

LED, Ethernet and Audio Switch View

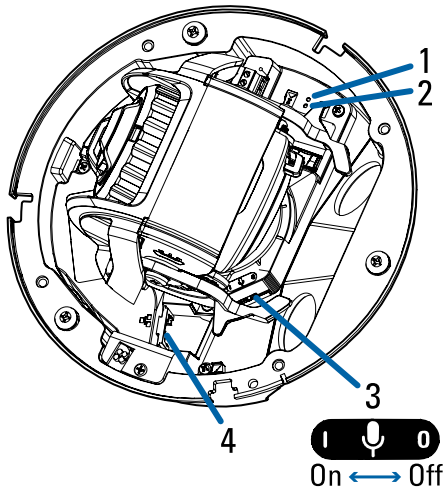

1. **Link LED indicator**
   Amber LED indicates if there is an active connection in the Ethernet port.
2. **Connection status LED indicator**
   Green LED provides information about device operation. For more information, see *Connection Status LED Indicator* on page 46.
3. **Microphone switch**
   Switch to enable or disable the built-in microphone. For more information, see *(Optional) Enabling the Microphone* on page 41.

   > **NOTE**
   > Microphone is not available on SRXE4P camera models.

4. **Ethernet port**
   Accepts an Ethernet connection to a network. Server communication and image data transmission occurs over this connection. Also receives power when it is connected to a network that provides Power over Ethernet.

Bottom View

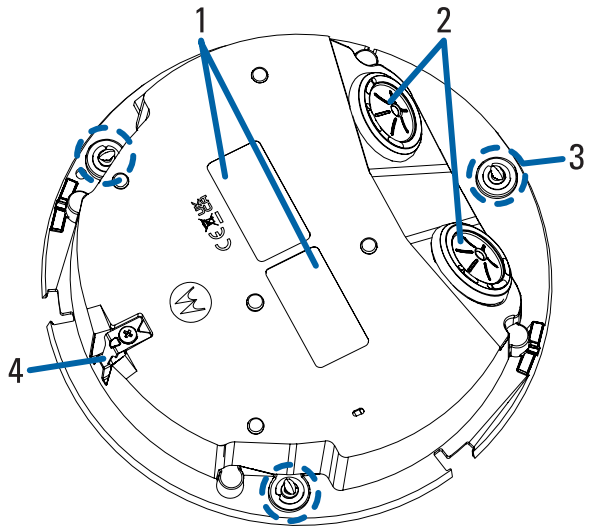

1. **Serial number tags**
   Device information, product serial number and part number label.
2. **Cable entry hole**
   An entry hole for the cables required for camera operation.
3. **Mounting setscrews**
   Setscrews to attach the camera to the mounting adapter.
4. **Lanyard hook**
   Hooks to attach the lanyard from the mounting adapter.

Surface Mount

Complete View

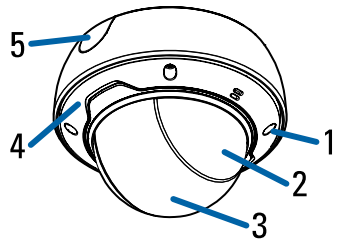

1. **Tamper resistant screws**
   Star-shaped captive screws to fix the dome cover to the base.
2. **IR cover**
   Shaded area on the dome bubble that covers the IR sensors. Present on IR camera models only.
3. **Dome cover**
   Vandal resistant dome cover.

4. **Dome rim**
   Vandal resistant dome rim.
5. **Sidewall plug**
   Covers the side cable entry hole.

Adapter View

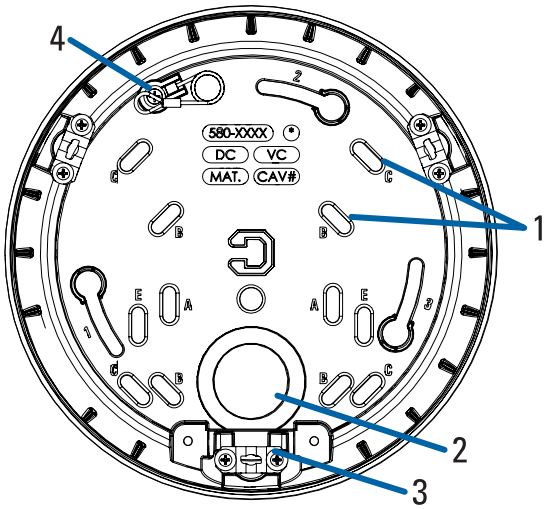

1. **Electrical box mounting holes**
   Holes for mounting the wall plate to an electrical box. The wall plate supports five configurations:

   A. UK standard single gang box
   B. Octagon gang box
   C. 4" gang box
   D. Pendant mount adapter
   E. US standard single gang box

2. **Rear cable entry hole**
   An entry hole for the cables required for camera operation.
3. **Side cable entry hole**
   A side entry hole for the cables required for camera operation.
4. **Lanyard**
   Attaches the camera to the module.

In-Ceiling Mount

Complete View

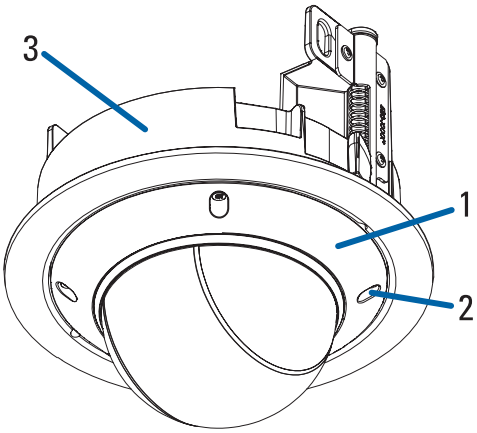

1. **Dome cover**
   Vandal resistant dome cover.
2. **Tamper resistant screws**
   Star-shaped captive screws to fix the dome cover to the base.
3. **In-ceiling mount adapter**
   Used to mount the camera to a ceiling.

Adapter View

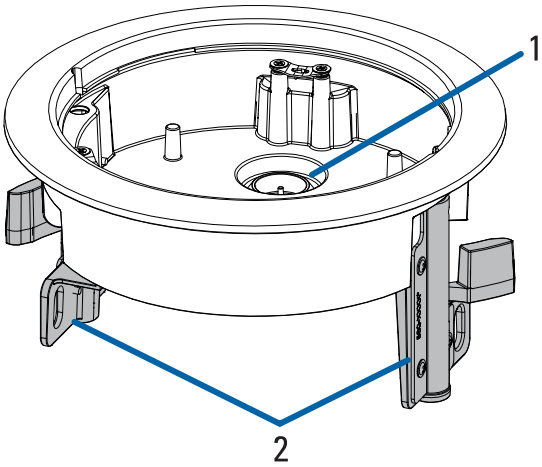

1. **Cable Entry Hole**
   An entry hole for the cables required for camera operation.
2. **Clamps**
   Spring loaded locking mechanisms that secure the camera to the mounting surface.

Pendant Mount

Complete View

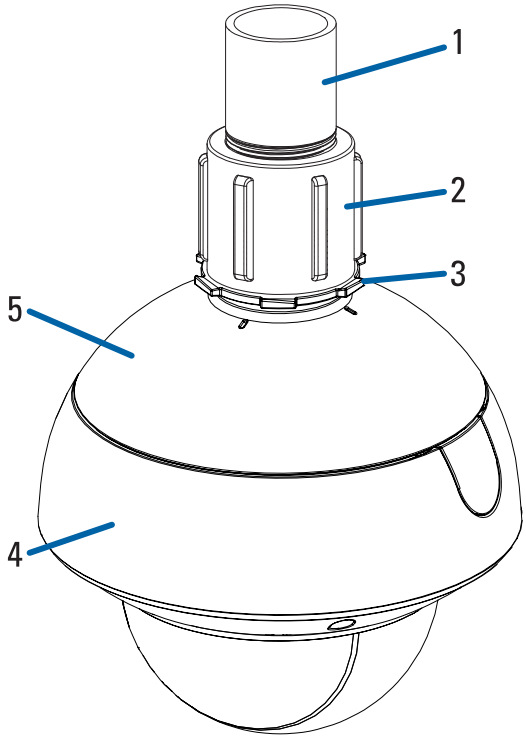

1. **NPT pipe**
   NPT pipe used for a pendant mount with the NPT adapter.
2. **1-1/2” NPT-female to NPT-female adapter**
   An adapter for attaching the pendant NPT mount to an NPT pipe.
3. **Lock nut**
   Lock nut for securing the pendant NPT mount on the NPT-female to NPT-female adapter.
4. **Surface mount adapter and camera**
   Surface camera module mounted to the surface mount adapter.
5. **Pendant NPT mount**
   Dome camera mount for NPT pipes or wall arm.

Adapter View

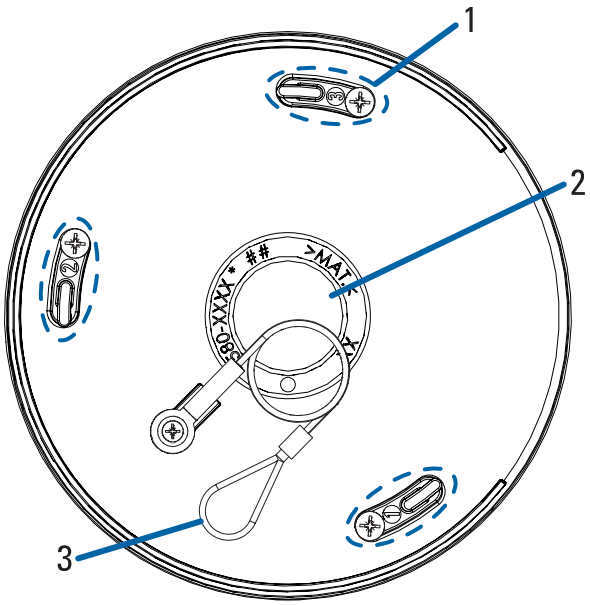

1. **Camera mounting screws**
   Screws for securing the camera to the pendant mount adapter.
2. **Cable entry hole**
   An entry hole for the cables required for camera operation.
3. **Lanyard**
   Connects to a lanyard hook on the surface mount adapter.

Wall Arm View

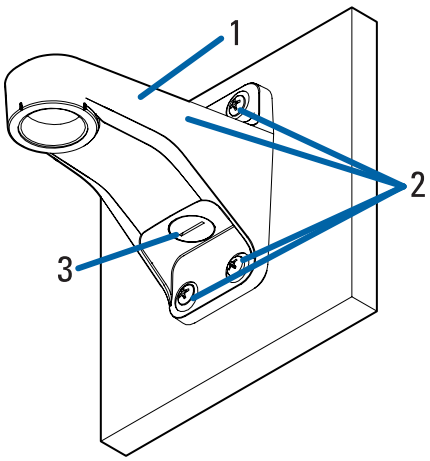

1. **Pendant wall mount**
   Used with the NPT adapter to mount the dome camera to a wall in pendant installations.
2. **Pendant wall mount screws**
   Screws for securing the pendant wall mount to the mounting bracket.
3. **NPT pipe entry hole**
   A 1-1/2” NPT threaded hole for NPT pipe conduits.

Preparing for Installation

Pre-Deployment In-Box Configuration

The camera comes equipped with an RJ45 connector that is accessible from the outside of the box for users that want to configure camera settings before installing the camera. The RJ45 connector is accessible through the small flap on the side of the camera box for easy configuration before unpacking the camera.

1. Locate and open the flap on the side of the camera packaging. Look for the *Config* label:

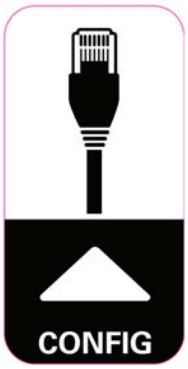

2. Connect a network cable to the RJ45 plug on the configuration cable. The network cable must provide PoE power, IEEE 802.3af Class 3, to power the camera during configuration.
3. Connect to the camera using the Camera Configuration Tool, or the camera's web browser interface to configure the camera's settings. For more information about connecting to the camera, see *Assigning an IP Address* on page 39, and *Accessing the Live Video Stream* on page 39.
4. Once you have finished making configuration changes, unplug the network cable.

Removing the Dome Cover

Remove the dome cover by loosening the screws that fix the cover to the base. Use a T20 Pin-In star-shaped driver to loosen the screws.

> **NOTE**
> Be careful not to scratch or touch the dome bubble. The resulting marks or fingerprints may affect the overall image quality. Keep the protective covers on the outside of the dome bubble until the installation is complete.

Removing the Configuration Cable

Remove the configuration cable by pushing down on the connector's tab and pulling it out of the port.

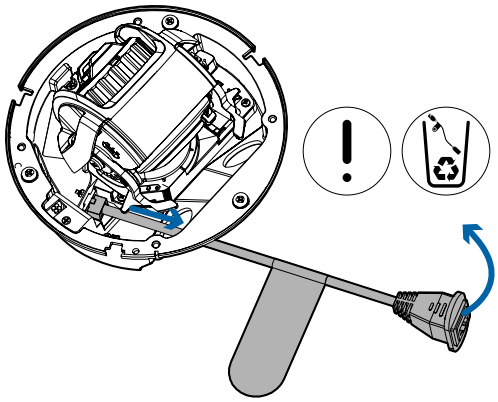

Mounting and Aiming Video Analytics Cameras

When installing a Pelco Smart analytics camera, follow the listed mounting and aiming recommendations to maximize the camera's analytics capabilities:

- The camera should be installed above 2.74 m (9 feet).
- The camera should tilt downwards no more than 45 degrees.
- The camera image should be level with the horizon line.
- The camera should be mounted to a stable surface to minimize the physical movement of the camera after installation.

For more details, see the *Designing a Site with Pelco Smart Analytics Guide*. This document is available on the Pelco website.

Inserting Cables through the Sealing Grommet

Unless specified otherwise, you must pull the required cables through the sealing grommet included with the camera when using a cable entry hole.

1. Locate the included cable entry grommet.
2. Pull the tab on the grommet to open a hole for the Ethernet cable.
3. Push an Ethernet cable through the grommet by one of the following methods:
   a. If the Ethernet cable is uncrimped, push the cable through the grommet.
   b. If the Ethernet cable is already crimped, place the grommet piercing cap on the Ethernet connector then push the cable through the grommet.

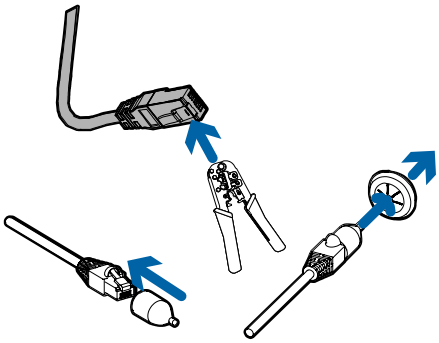

   Ensure that the orientation of the cable and grommet matches the one shown in the image.
4. Push any other required cables through the grommet.
5. Install the grommet and cables into the base of the camera.

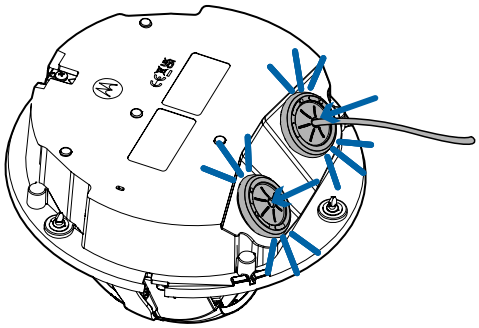

> **NOTE**
> If you will pull multiple cables through the sealing grommet, apply silicone sealant to seal any gaps in the grommet.

Surface Mount Installation

Required Tools and Materials

- Small slotted screwdriver with 5/64” or 2 mm blade width – for connecting power when not using Power over Ethernet.
- No. 2 Phillips screwdriver – for attaching camera to an electrical box or mounting surface
- Silicone sealant

Camera Package Contents

Ensure the package contains the following:

- Pelco Sarix Enhanced 4 Indoor or Outdoor Dome Camera
- Mounting template sticker
- Cable entry grommets
- RJ-45 grommet piercing cap
- 4 screws and anchors for solid walls

Installation Steps

Installing the Surface Adapter Using the Bottom Cable Entry Hole

Perform the following steps if the required cables will be coming out of the mounting surface. Use this procedure on surfaces that can easily be cut, such as aluminum, and when the cables should be kept out of sight.

1. Use the mounting template to drill the mounting holes and one cable entry hole into the mounting surface.

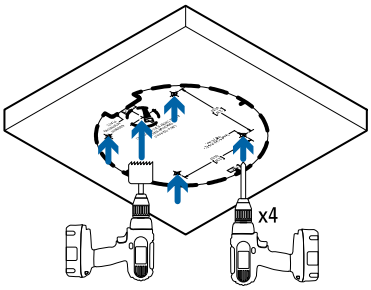

2. Pull the cables through the cable entry hole in the mounting surface.
3. Insert the wall anchors into the mounting holes.

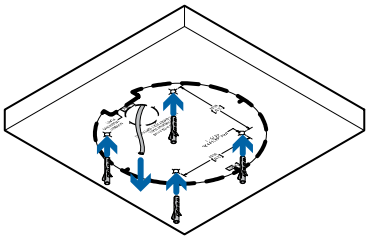

4. Use four screws to secure the adapter to the mounting surface.

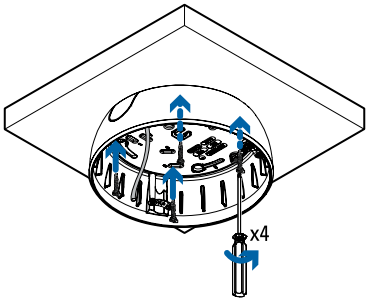

Installing the Surface Adapter Using the Side Cable Entry Hole

Perform the following steps if you will be mounting to a surface with the required cables coming out of an external conduit pipe. Use this procedure if the mounting surface cannot be easily cut, or when cables must be brought along the outside of the mounting surface.

1. Use the mounting template to drill four mounting holes and position the conduit pipe correctly.

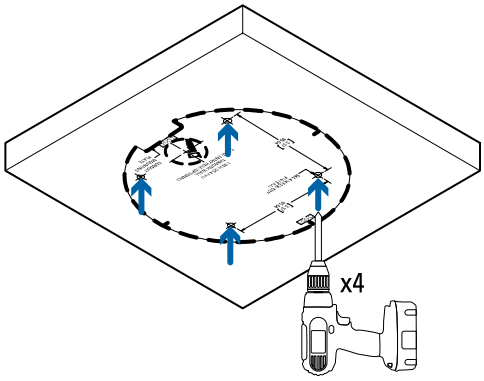

2. Insert the wall anchors into the mounting holes.

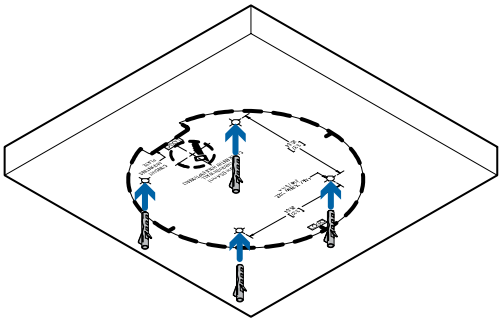

3. Use a screwdriver to loosen the side cover on the surface adapter, and remove the cover.

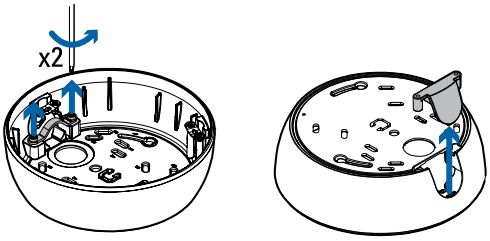

4. Choose the correct size cover for the conduit pipe, and screw into place.

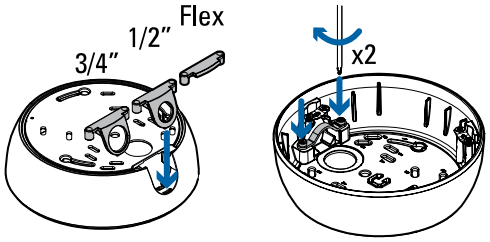

5. Pull the required cables through the conduit.
6. Drive four screws into the mounting holes on the surface adapter.
7. Insert the conduit pipe into the side conduit entry.

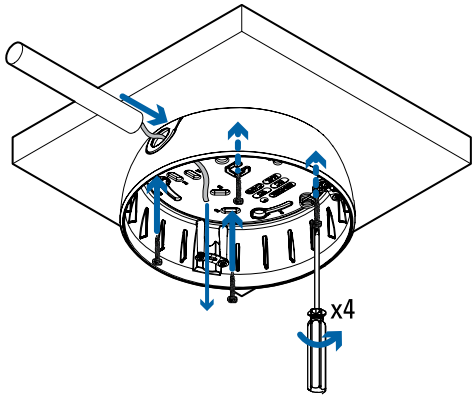

Mounting the Dome Camera to the Surface Adapter

1. Attach the lanyard on the adapter to the lanyard hook on the bottom of the camera. Let the camera hang.

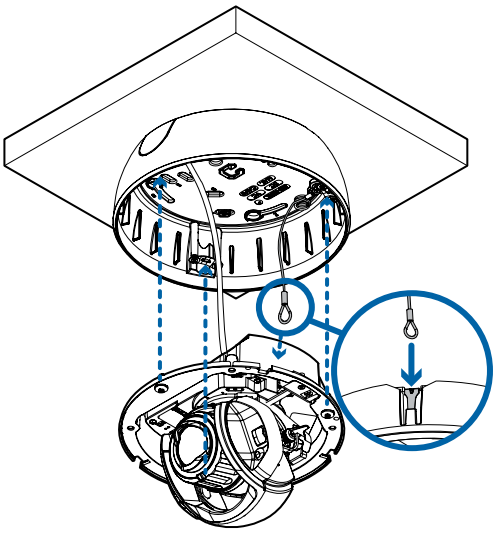

2. Insert the sealing grommet with the required cables pulled through into the cable entry hole on the bottom of the camera. For more information, see *Inserting Cables through the Sealing Grommet* on page 11.
3. Mount the camera using the three mounting setscrews.

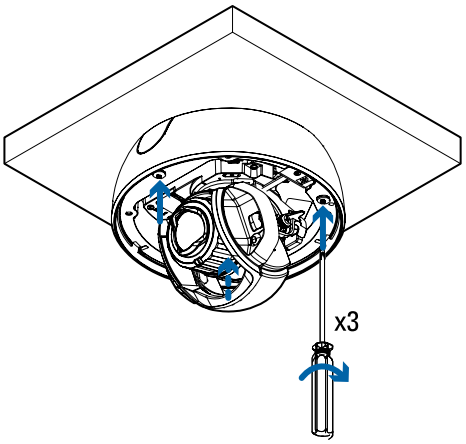

Connecting Cables

Refer to the diagrams in *Overview* on page 1 for the location of the different connectors.

1. If external input or output devices are part of the installation (for example: door contacts, relays, etc.), connect the devices to the I/O connector block.
2. Connect a network cable to the Ethernet port (RJ-45 connector).
   The Link LED indicator will turn on once a network link has been established.
3. Connect power using one of the following methods:

- Power over Ethernet (PoE) Class 3 or Class 4 – If PoE is available, the LEDs will turn on.
- External Power – Connect an external 12 V DC power source to the power connector block.

4. Check that the Connection Status LED indicator indicates the correct state. For more information, see *Connection Status LED Indicator* on page 46.

Installing the Dome Cover

Be careful not to touch or scratch the dome bubble when installing the dome cover.

Installing the Dome Cover for a Non-IR Dome Camera

1. Attach the lanyard to the dome cover.
2. Remove the protective cover on the inside of the dome bubble.
3. Attach the dome cover to the base by tightening the screws with the star-shaped driver.
4. Remove the protective cover on the outside of the dome bubble.

Installing the Dome Cover for an IR Dome Camera

1. Attach the lanyard to the dome cover.

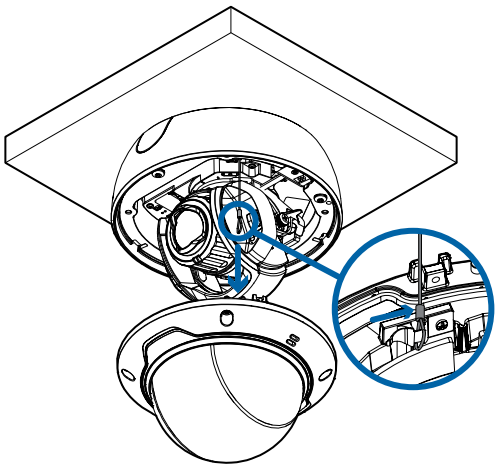

2. Remove the protective cover on the inside of the dome bubble.
3. Make sure that the camera lens is facing the side of the dome cover that has the green label on it.

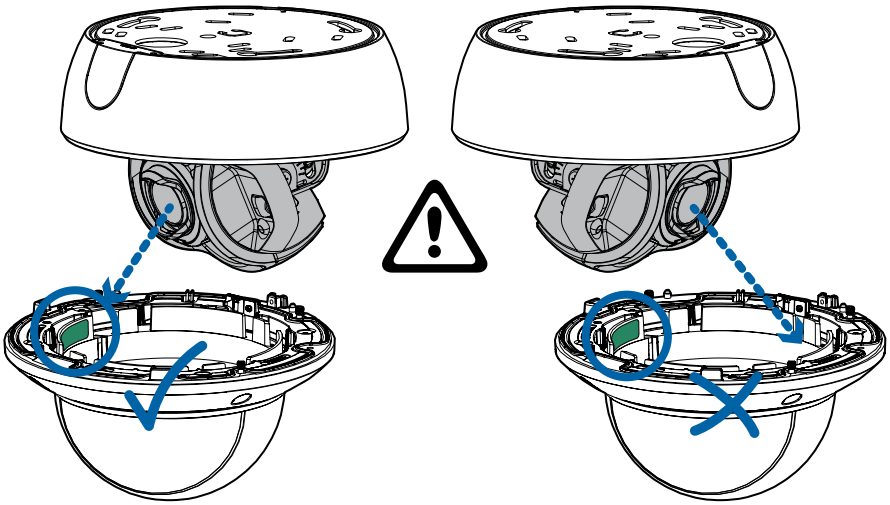

4. Align the slots on either side of the camera with the slots on the dome cover and gently slide the dome cover onto the camera.

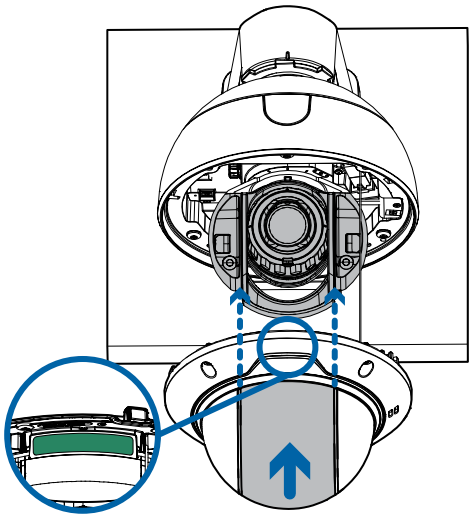

5. Tuck the lanyard inside the camera so it does not get pinned between the camera and dome cover.

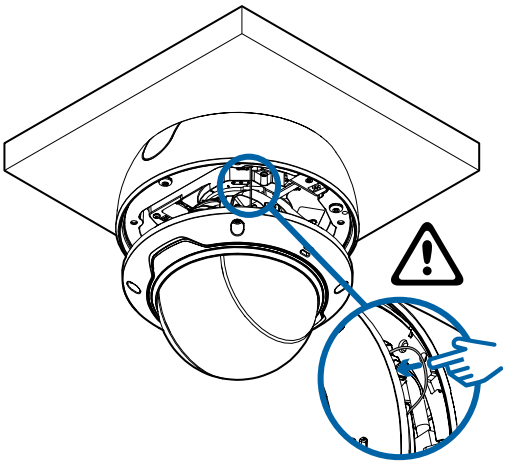

6. Fix the camera into place by pushing upward on the dome bubble.
7. Hold the camera bubble in place and rotate the rim until the setscrews on the rim align with the screw holes on the camera.

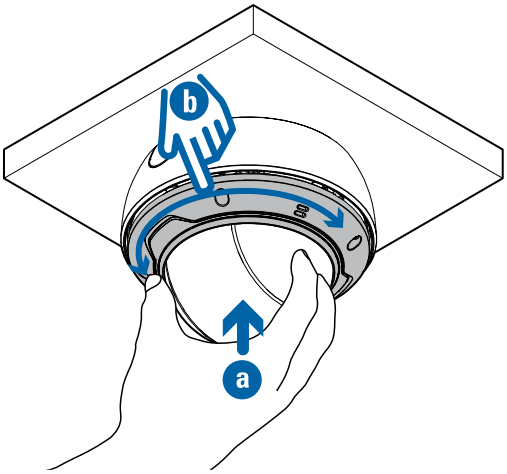

8. Attach the dome cover to the base by tightening the screws with the star-shaped driver.

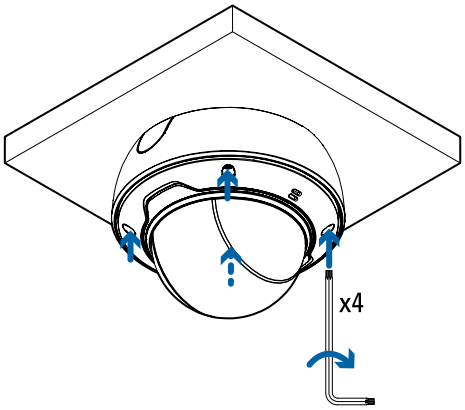

9. Remove the protective cover on the outside of the dome bubble.

In-Ceiling Mount Installation

Required Tools and Materials

- Small slotted screwdriver with 5/64” or 2 mm blade width – for connecting power when not using Power over Ethernet.
- No. 2 Phillips screwdriver – for attaching the camera to a mounting surface and positioning the clamps.

Camera Package Contents

Ensure the package contains the following:

- Pelco Sarix Enhanced 4 Indoor Dome Camera
- Mounting template sticker
- Cable entry grommets
- RJ-45 grommet piercing cap
- 4 screws and anchors for solid walls

Installation Steps

Mounting the Dome Camera Using the Ceiling Clamps

CAUTION

This camera is designed for indoor use only.

Perform the following steps if you will be mounting the camera into a ceiling.

1. Use the mounting template to cut an entry hole for the camera and cables into the ceiling.

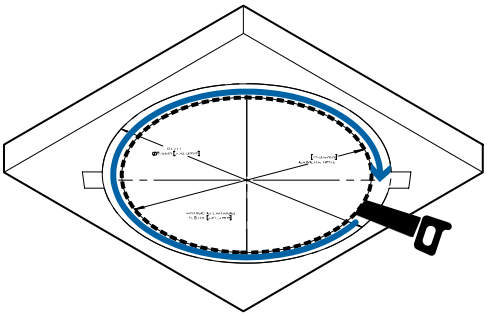

2. Insert the sealing grommet with all the required cables pulled through into the cable entry hole on the bottom of the in-ceiling adapter. For more information on using the sealing grommet, see *Inserting Cables through the Sealing Grommet* on page 11.

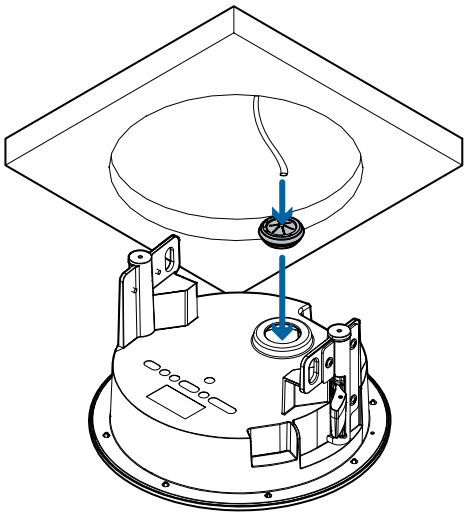

3. Insert the in-ceiling adapter into the entry hole in the ceiling. When inserting the camera, the clamps should be flush with the side of the adapter.

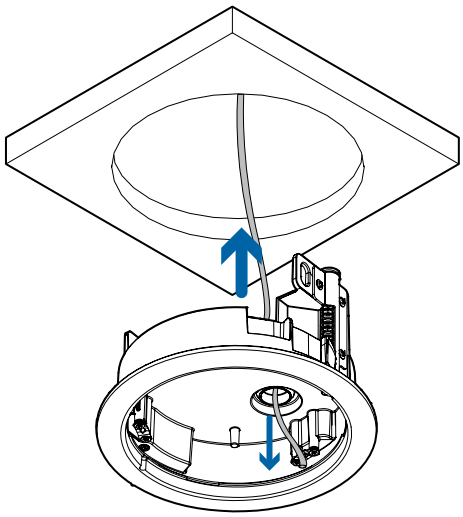

4. Use a No. 2 Phillips screwdriver to push each of the clamps into the camera. Push the clamp down until the spring is fully compressed, then rotate the clamp counter clockwise into the ready position.

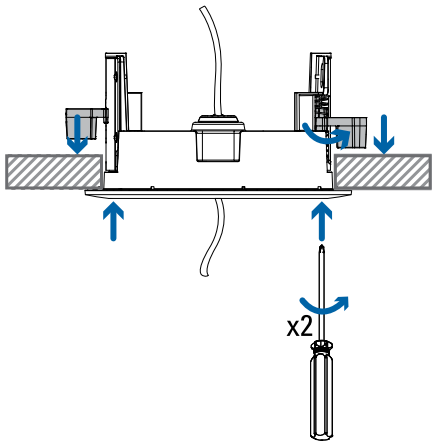

5. Attach the lanyard on the in-ceiling adapter to the lanyard hook on the bottom of the camera.
6. Insert the dome camera into the entry hole in the ceiling. Make sure you align the mounting screws on the camera module with the mounting points on the in-ceiling adapter.

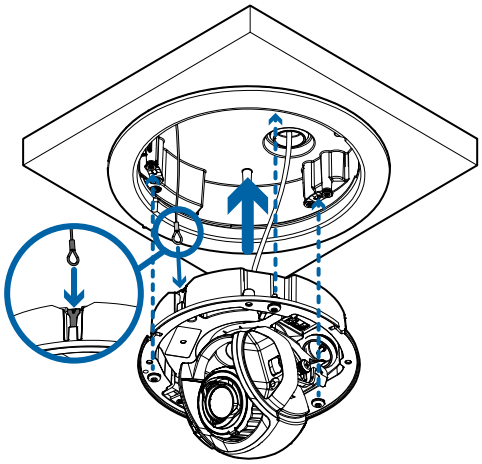

7. Tighten the mounting screws to secure the camera module to the in-ceiling adapter.

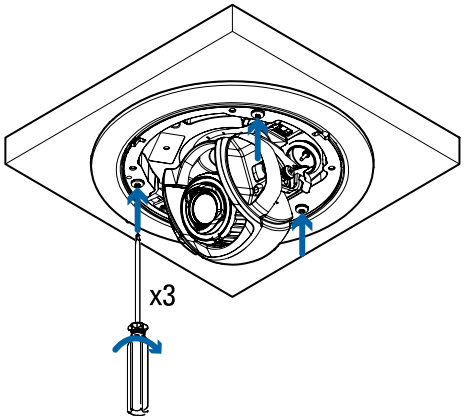

Connecting Cables

Refer to the diagrams in *Overview* on page 1 for the location of the different connectors.

1. If external input or output devices are part of the installation (for example: door contacts, relays, etc.), connect the devices to the I/O connector block.
2. Connect a network cable to the Ethernet port (RJ-45 connector).
   The Link LED indicator will turn on once a network link has been established.
3. Connect power using one of the following methods:
   - Power over Ethernet (PoE) Class 3 or Class 4 – If PoE is available, the LEDs will turn on.
   - External Power – Connect an external 12 V DC power source to the power connector block.
4. Check that the Connection Status LED indicator indicates the correct state. For more information, see *Connection Status LED Indicator* on page 46.

Installing the Dome Cover

Be careful not to touch or scratch the dome bubble when installing the dome cover.

Installing the Dome Cover for a Non-IR Dome Camera

1. Attach the lanyard to the dome cover.
2. Remove the protective cover on the inside of the dome bubble.
3. Attach the dome cover to the base by tightening the screws with the star-shaped driver.
4. Remove the protective cover on the dome bubble.

Installing the Dome Cover for an IR Dome Camera

1. Attach the lanyard to the dome cover.
2. Remove the protective cover on the inside of the dome bubble.
3. Make sure that the camera lens is facing the side of the dome cover that has the green label on it.

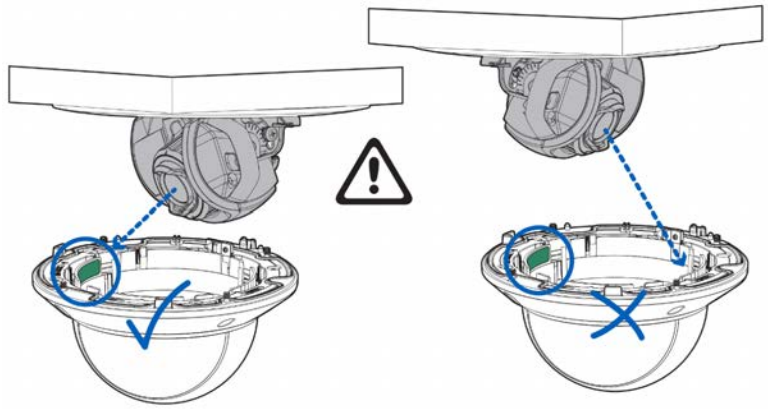

4. Align the slots on either side of the camera with the slots on the dome cover and gently slide the dome cover onto the camera.

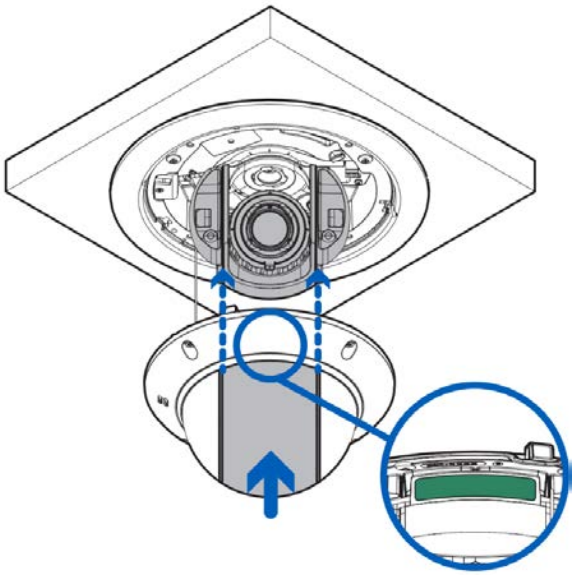

5. Tuck the lanyard inside the camera so it does not get pinned between the camera and dome cover.

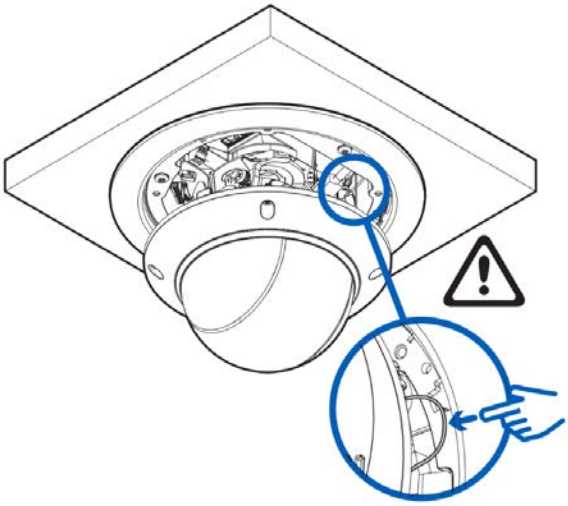

6. Fix the camera into place by pushing upward on the dome bubble.
7. Hold the camera bubble in place and rotate the rim until the setscrews on the rim align with the screw holes on the camera base.

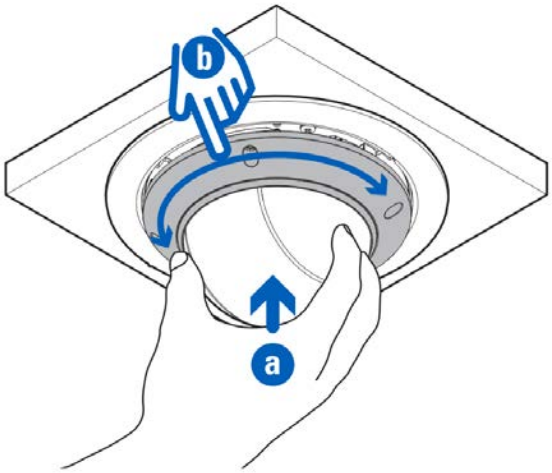

8. Attach the dome cover to the base by tightening the setscrews with the star-shaped driver.

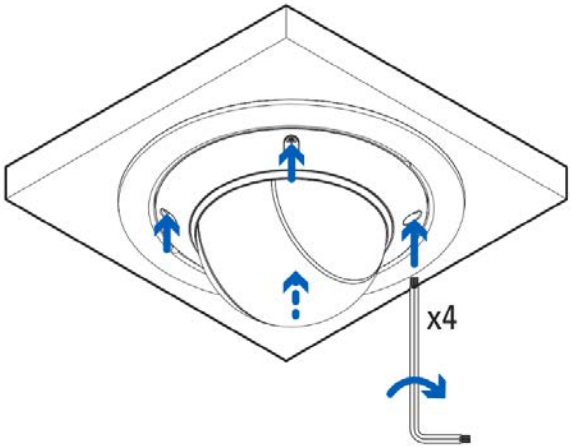

9. Remove the protective cover on the outside of the dome bubble.

Pendant Mount Installation

Required Tools and Materials

- Small slotted screwdriver with 5/64” or 2 mm blade width – for connecting power when not using Power over Ethernet.
- Pendant wall mount (WLMT-1021) or Pendant NPT pipe mount
  - (Pendant wall mount only) No. 2 Phillips screwdriver – for attaching the pendant wall mount bracket to a mounting surface
  - (Pendant NPT pipe mount only) 1-1/2” NPT-female to NPT-female pipe adapter – for attaching the pendant NPT mount to a pipe
- Silicone sealant

Package Contents

Ensure the package contains the following:

NOTE

The pendant wall mount and pendant NPT mount are sold separately.

- Pelco Sarix Enhanced 4 Dome Surface Mount Camera
- Mounting template sticker
- Cable entry grommets
- RJ-45 grommet piercing cap
- 4 screws and anchors for solid walls
- Pendant NPT mount:
  - Lock nut
  - Thread seal tape
- Pendant Wall Mount:
  - Mounting template sticker
  - Mounting bracket
  - Thread seal tape
  - Four screws and anchors for solid walls

Installation Steps

Installing the Pendant Wall Mount

When installing the wall mount, the cables for the camera can be accessed through either a hole in the wall or from a bottom conduit entry into the wall arm. If your installation requires a bottom conduit to access the required cables, refer to *Accessing Cables through the Bottom Conduit* on page 29.

1. Use the mounting template to drill four mounting holes, and one cable entry hole, into the mounting surface.

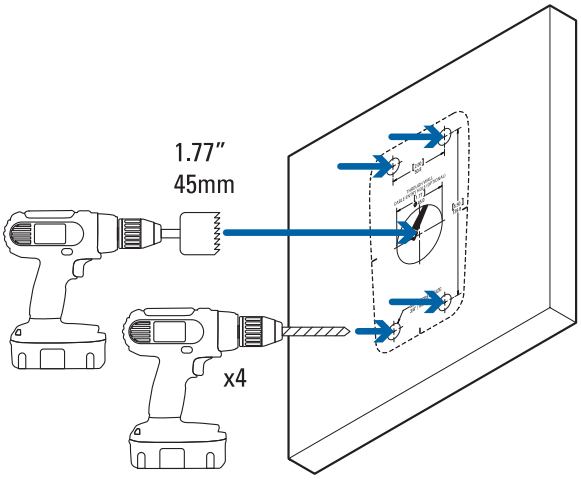

2. Pull the required cables through the cable entry hole and thread the cables through the wall arm.

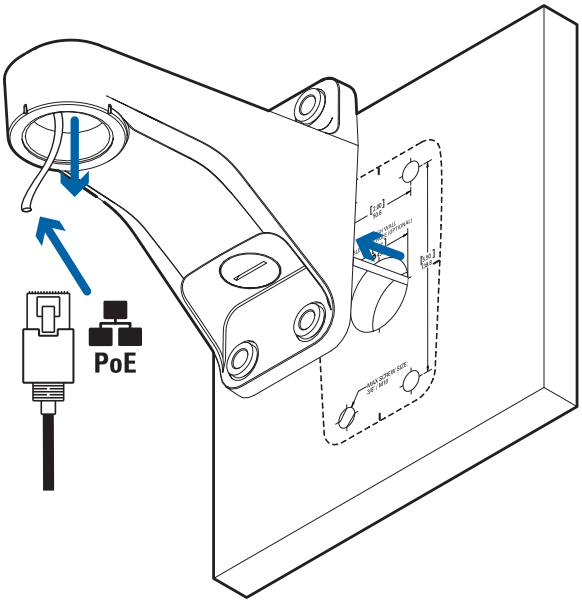

3. Secure the wall arm to the mounting surface using the provided washers and mounting screws.

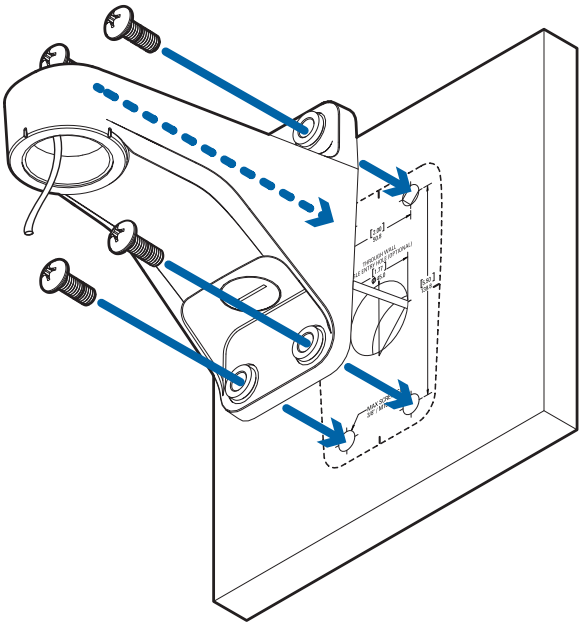

4. The finished wall arm installation should resemble the following image.

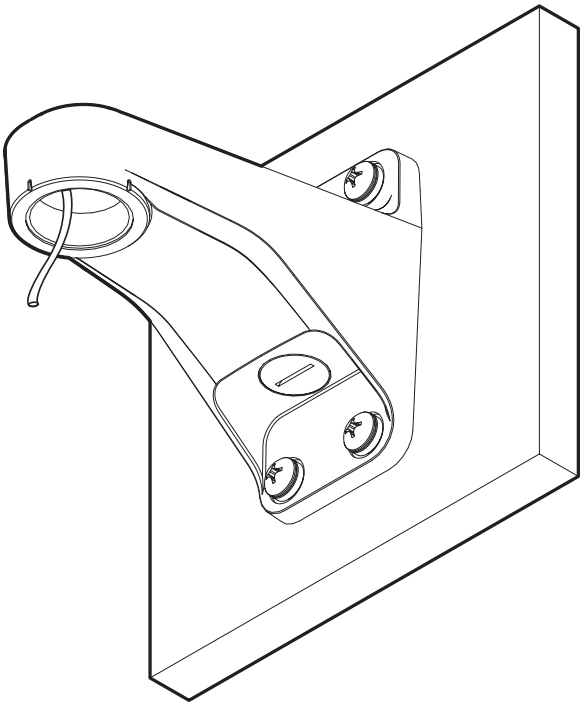

Accessing Cables through the Bottom Conduit

1. Use a screw driver to loosen the plug on the bottom of the wall arm.

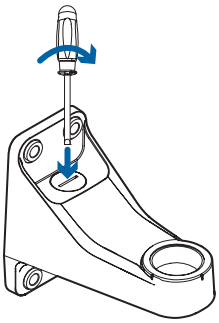

2. Use the mounting template to drill four mounting holes into the mounting surface.

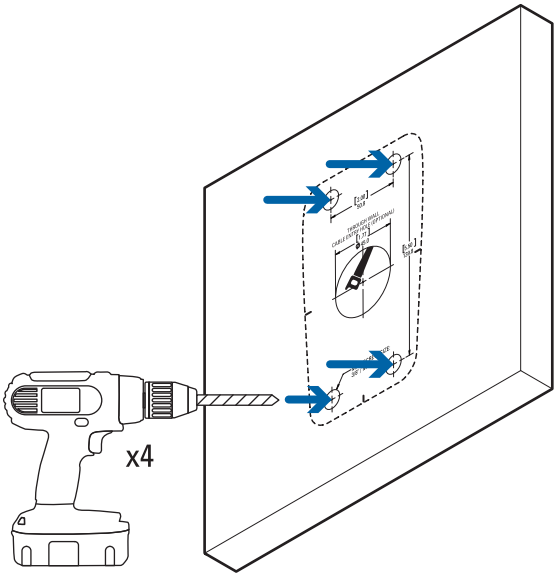

3. Use a drill to bolt the wall arm to the mounting surface.

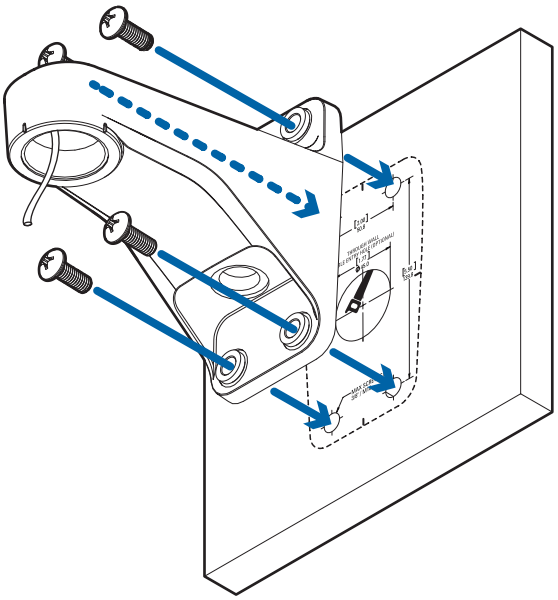

4. Push the required cables up the conduit pipe.

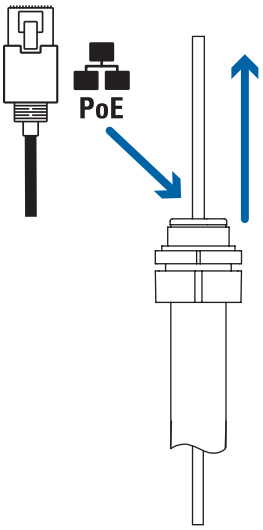

5. Screw the conduit pipe to fasten it to the bottom of the wall arm.

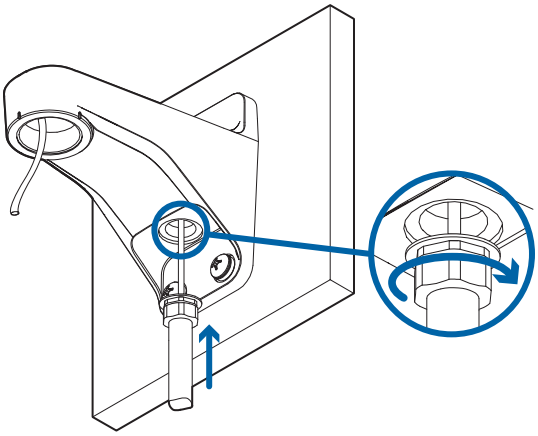

6. The finished wall arm installation should resemble the following image.

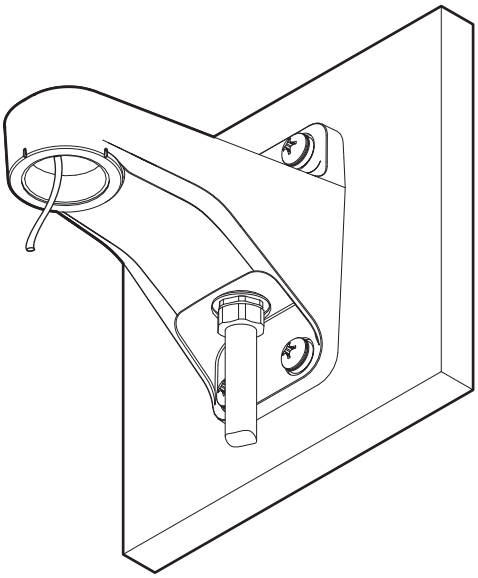

(Optional) Installing the Pendant NPT Mount

For installation environments where a wall is not available, you can also mount the pendant NPT mount to a pipe.

TIP

We recommend using a 1-1/2” conduit pipe for mounting the pendant NPT.

NOTE

The NPT pipe and NPT-female to NPT-female adapter are not supplied by Pelco and should be sourced separately.

1. Pull the required cables through the NPT conduit pipe.
2. Apply thread seal tape to the pipe and screw on the 1-1/2” NPT female to NPT female pipe adapter.

3. Screw the lock nut onto the pendant NPT mount.
4. Apply thread seal tape to the pendant NPT mount and screw it into the pipe adapter.

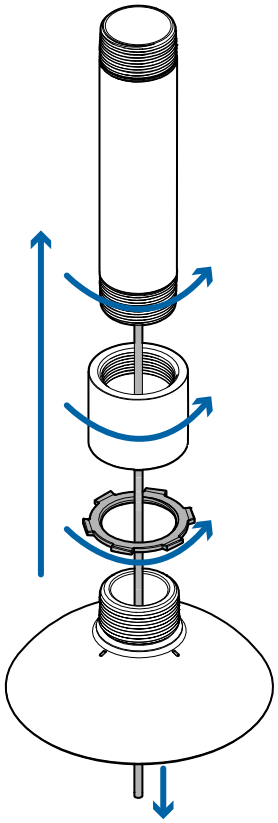

Mounting the Dome Camera to the Pendant Wall Mount

1. Pull the required cables through the pendant adapter.
2. Screw the lock nut onto the pendant adapter.
3. Apply thread seal tape to the pendant NPT mount and screw it into the pipe adapter

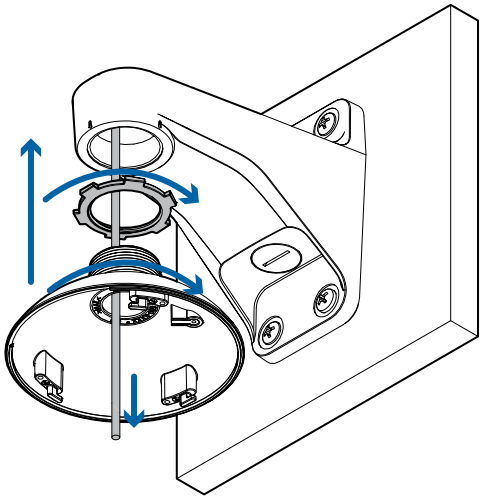

4. Attach the lanyard on the pendant mount to the lanyard hook on the bottom of the surface mount adapter.

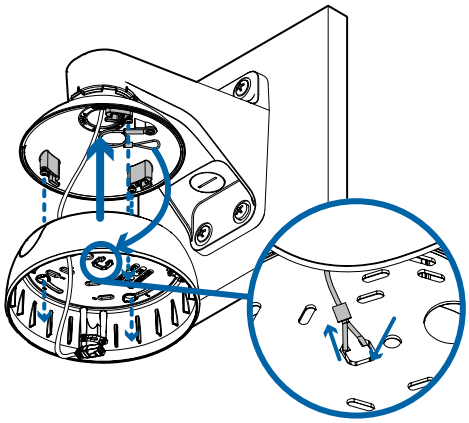

5. Mount the surface adapter so the mounting screws go into the holes and then twist the surface adapter clockwise until it is secure. Use a screwdriver to tighten the screws on the inside of the adapter, and secure the adapter to the wall arm.

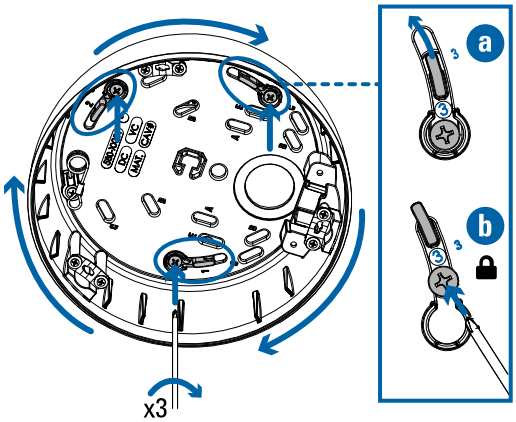

6. Install the sealing grommet with all the required cables. For more information, see *Inserting Cables through the Sealing Grommet* on page 11.
7. Connect the lanyard in the adapter to the lanyard hook on the bottom of the camera. Allow the camera to hang.

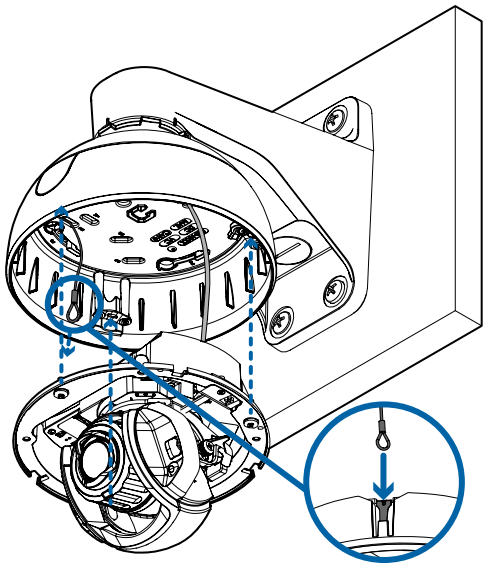

8. Tighten the bolts to secure the camera to the adapter.

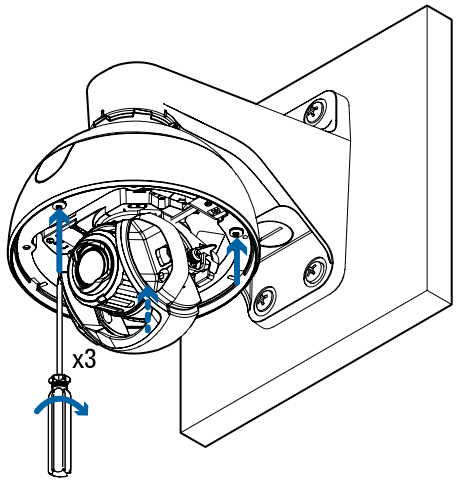

Connecting Cables

Refer to the diagrams in *Overview* on page 1 for the location of the different connectors.

1. If external input or output devices are part of the installation (for example: door contacts, relays, etc.), connect the devices to the I/O connector block.
2. Connect a network cable to the Ethernet port (RJ-45 connector).
   The Link LED indicator will turn on once a network link has been established.
3. Connect power using one of the following methods:
   - Power over Ethernet (PoE) Class 3 or Class 4 – If PoE is available, the LEDs will turn on.
   - External Power – Connect an external 12 V DC power source to the power connector block.
4. Check that the Connection Status LED indicator indicates the correct state. For more information, see *Connection Status LED Indicator* on page 46.

Installing the Dome Cover

Be careful not to touch or scratch the dome bubble when installing the dome cover.

Installing the Dome Cover for a Non-IR Dome Camera

1. Attach the lanyard to the dome cover.
2. Remove the plastic cover on the inside of the dome bubble.
3. Attach the dome cover to the base by tightening the screws with the star-shaped driver.
4. Remove the plastic cover on the dome bubble.

Installing the Dome Cover for an IR Dome Camera

1. Attach the lanyard to the dome cover.

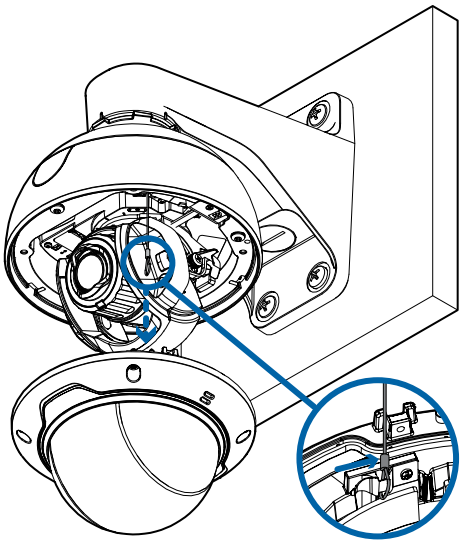

2. Remove the protective cover on the inside of the dome bubble.
3. Make sure that the camera lens is facing the side of the dome cover that has the green label on it.

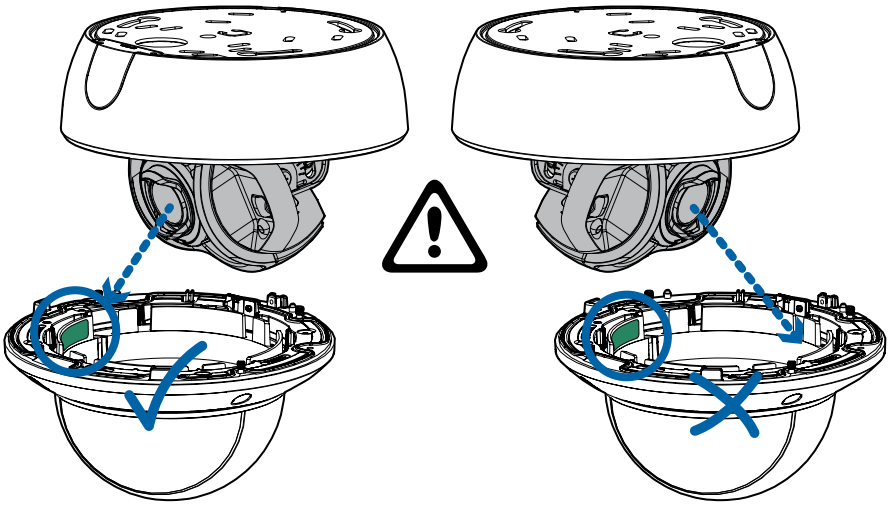

4. Align the slots on either side of the camera with the slots on the dome cover and gently slide the dome cover onto the camera.

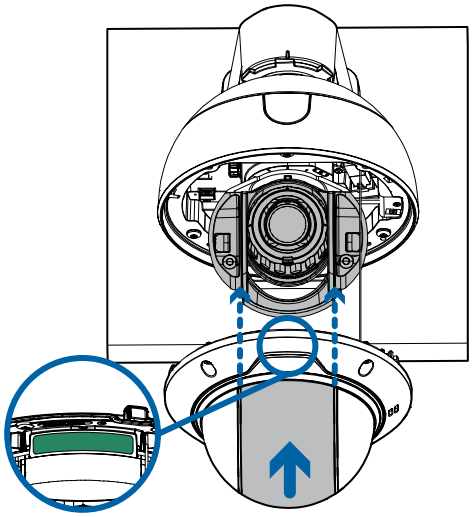

5. Tuck the lanyard inside the camera so it does not get pinned between the camera and dome cover.

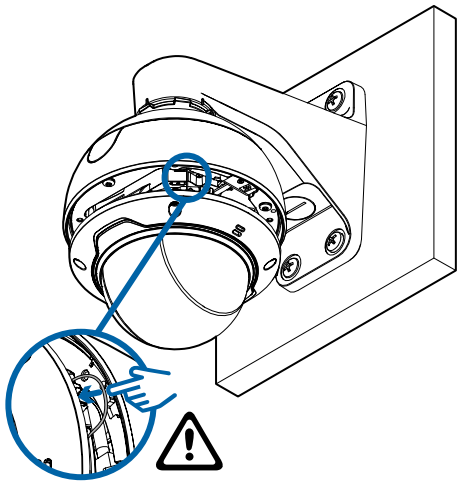

6. Fix the camera into place by pushing upward on the dome bubble.
7. Hold the camera bubble in place and rotate the rim until the setscrews on the rim align with the screw holes on the camera base.

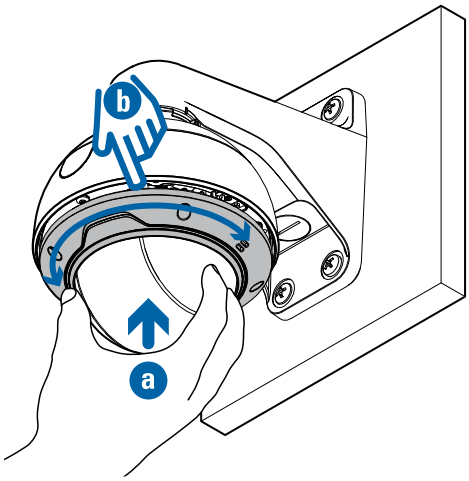

8. Attach the dome cover to the base by tightening the screws with the star-shaped driver.

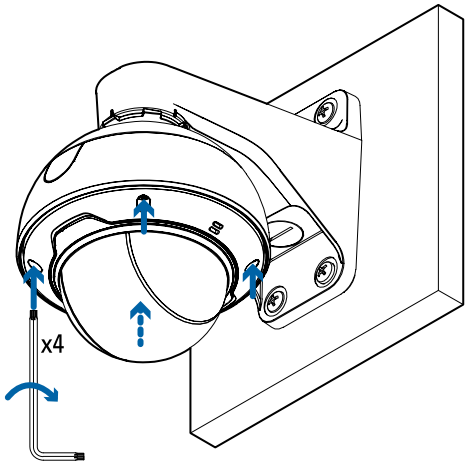

9. Remove the protective cover on the outside of the dome bubble.

Connecting a Camera to the Network

Initializing a Camera Username and Password

IMPORTANT

You must create a user with *administrator* privileges before the camera is operational.

The new user can be created using the following methods:

- Camera's web interface. Enter the camera's IP address in a web browser to access the web interface. For more information, see the *Pelco Sarix Enhanced 4 and 4P Dome Operations Manual*. If the camera is in the factory default state, you will be redirected to the New User page to create an administrator user:
  1. Enter a new User Name or keep the default administrator name.
  2. Enter a new Password for the user. It is recommended to use a secure and complex password.
  3. Confirm the new password.
  4. For the first user, Administrator must be selected in the Security Group drop-down menu.
  5. Click Apply. After creating the user, you will be asked to login.
- Camera Configuration Tool: discovered cameras that are identified by will require a first user to be set. Select the **Admin Users** tab to create the first user. For more information, see the *Camera Configuration Tool User Guide*.

Set up the first user through the camera's Web Interface or Camera Configuration Tool before you connect the camera to a VMS.

(Optional) Using the USB Wi-Fi Adapter

If you have a USB Wi-Fi Adapter (USB-AC56-NA-MSI-B or USB-AC56-EU-MSI-B), attach it to the camera's USB-C port to access the camera's mobile web interface.

After you connect to the Wi-Fi signal broadcast by the adapter, you can access the mobile web interface from any mobile device using the following address:

http://camera.lan

NOTE

The camera will reserve the 10.11.22.32/28 subnet for internal use while the USB Wi-Fi Adapter is plugged in.

For more information about configuring the camera from the mobile web interface, see the USB Wi-Fi Adapter System User Guide.

Assigning an IP Address

The device automatically obtains an IP address when it is connected to a network.

> **NOTE**
> If the device cannot obtain an IP address from a DHCP server, it will use Zero Configuration Networking (Zeroconf) to choose an IP address. When set using Zeroconf, the IP address is in the 169.254.0.0/16 subnet.

The IP address settings can be changed using one of the following methods:

- Device's web browser interface: http://*<camera IP address>/*.
- Network Video Management software application.

> **NOTE**
> When you log in the first time, the camera will be in a factory default state and no password is required. You must create a user with ***administrator*** privileges before the device is operational. For more information, see *Initializing a Camera Username and Password* on the previous page.

Accessing the Live Video Stream

Live video stream can be viewed using one of the following methods:

- Web browser interface: http://*< camera IP address>/*.
- Network Video Management software application.

> **NOTE**
> When you log in the first time, the camera will be in a factory default state and no password is required. You must create a user with ***administrator*** privileges before the device is operational. For more information, see *Initializing a Camera Username and Password* on the previous page.

Aiming the Dome Camera

Reference the camera's live stream as you aim the camera.

1. Loosen the pan and tilt lock screws on the camera.
2. Turn the lens to the correct direction by panning and tilting the lens.

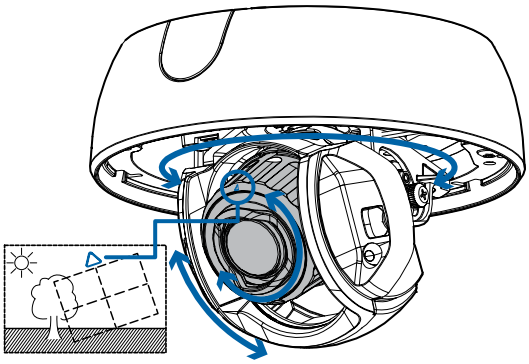

3. Tighten the pan and tilt lock screws to secure the dome camera's position.
4. Rotate the azimuth control ring to set the image to the correct angle.
5. For an IR Camera, set the IR LEDs in one of the three positions shown in the image below.

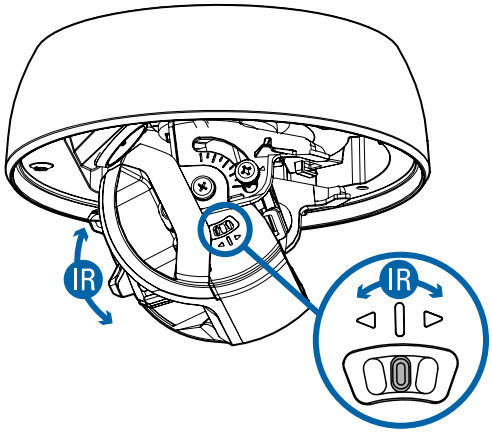

6. In the camera web browser interface, adjust the camera's Image and Display settings. You can set the zoom position, focus, and change the image rotation.

Zooming and Focusing the Dome Camera

Ensure this procedure is performed after the dome cover is installed, so you can accommodate for the focus shift caused by the dome bubble.

- In the camera web browser interface, Pelco Unity Video or the Pelco Control Center software, use the camera's Image and Display settings to zoom and focus the camera.
    a. Use the zoom buttons to zoom the camera in or out.
    b. Click **Auto Focus** to focus the lens.
    c. Use the focus near and far buttons to manually adjust the focus.

(Optional) Enabling the Microphone

The Sarix Enhanced 4 camera models feature an internal microphone, and include a switch to physically enable or disable the microphone. The microphone switch is set to OFF by default.

We recommend that you enable the microphone before installing the camera in its final location.

1. Locate the microphone switch on the camera assembly.
2. Slide the switch from the default OFF position to ON to enable the microphone. For more information, see *Camera Module* on page 1

(Optional) Configuring the Microphone

You can configure the microphone or line-level audio input from the camera web interface.

Configure the Microphone from the Camera Web Interface

- In the camera web interface, the microphones are configured from the *Audio* page. You can adjust the microphone volume by changing the gain.
  - Gain for microphone Internal Mic – configures the gain for the microphone that is built into the camera.
  - Gain for microphone External Input – configures the gain for any line level audio input that is connected to the audio input connector on the I/O terminal block.

For instructions on how to configure the microphone from your camera's web interface, refer to Pelco > Product documentation and search for the relevant Operations Manual for the camera type.

(Optional) Configuring microSD Card Storage

To use the camera's onboard storage feature, you must insert 1 microSD card into a microSD card slot. While there are two microSD slots, currently the camera only supports a single microSD card in either slot for onboard storage.

It is recommended that the microSD card have a write speed of class 10 or better. If the microSD card does not meet the recommended write speed, the recording performance may suffer and result in the loss of frames or footage.

1. Insert a microSD card into the camera.

   CAUTION

   Do not force the microSD card into the camera or you may damage the card and the camera. The microSD card can only be inserted in one direction.

2. Access the camera's web interface to enable the onboard storage feature. For more information, see the *Pelco Sarix Enhanced 4 and 4P Dome Operations Manual*.

Configuring the Camera

After the camera is installed, configure it using the instructions in the current version of the *Pelco Sarix Enhanced 4 and 4P Dome Operations Manual*.

For More Information

Additional information about setting up and using the device is available in the following guides:

- *Pelco Sarix Enhanced 4 and 4P Dome Operations Manual* available on the Pelco website: www.pelco.com.
- *Camera Configuration Tool User Guide*

Cable Connections

Connecting External Power

If PoE is not available, the camera needs to be powered through the removable power connector block. Refer to the diagrams in this guide for the location of the power connector block.

The power consumption information is listed in the product specifications.

To connect power to the power connector block, complete the following steps:

1. Remove the power connector block from the camera.
2. Remove the insulation from ¼" (6 mm) of the power wires. Do not nick or damage the wires.
3. Insert the two power wires into the two terminals on the power connector block. The connection can be made with either polarity.
   Use a small slotted (5/64" or 2 mm blade width) screwdriver to loosen and tighten the terminals.
4. Attach the power connector block back into the camera.

IMPORTANT

This product is intended to be supplied by a UL Listed Power Unit marked "Class 2" or "LPS" or "Limited Power Source" with output rated 12 – 24VDC, 13 W min. or PoE rated 48 VDC, 13 W min.

External Power Failover

If the camera has power available from both an external Aux power supply and a PoE PSE (Power Sourcing Equipment) device, the camera will draw power from Aux. In the event that the camera loses power from the preferred Aux power supply it can transition to drawing power from the PoE PSE device.

SRXE4 and SRXE4P camera models respond differently if they lose power from the preferred Aux power supply. If an SRXE4P camera loses power from the preferred Aux power supply, the camera is capable of a Seamless Failover, meaning the SRXE4P can switch to drawing power from the PoE PSE device without interruption. Conversely, the SRXE4 camera models experiences a Non-Seamless Failover, meaning the camera may power off while waiting to transition to PoE power.

Non-Seamless Failover for SRXE4 models

If the camera loses Aux power, the camera will power-off while waiting to transition to PoE power. If the external Aux power re-energizes, the camera might reboot while transitioning back to using Aux power. The camera might not reboot if the external Aux power supply reacts quickly enough to the increase in load.

NOTE

Ensure that sufficient power is manually reserved on the PSE, as the camera will not request PoE power until the camera loses Aux power.

Seamless Failover for SRXE4P models

Seamless failover allows the camera to transition between PoE and auxiliary power sources without any interruption of camera operation or video recording. This is mainly useful if you want redundant power sources so that backup power will be available if one power source goes down.

NOTE

Seamless failover is only guaranteed when PoE Class 4 (25.5W) "full power" is available on the PoE port. Auxiliary (Aux) power is always assumed to be “full power,” meaning that there is enough power available for all possible camera functions. PoE, on the other hand, has many different power classes and the product’s functionality depends on the PoE power class that is available.

If the PSE demotes the camera to PoE Class 3 (13W), the camera will boot and display an “insufficient power” message. Therefore, if the camera is connected to a Class 3 PoE source while running on Aux power and using full IR power and the Aux power source is disconnected, the camera will most likely overload the PSE and reboot. However, if the camerais not using IR LEDs and Aux power is removed, the Class 3 PoE power source would be adequate to guarantee seamless failover.

IMPORTANT

There is a downside to having seamless failover if you aren’t using this functionality and are connecting your cameras to PoE-enabled switches while running the camera on Aux power. Since the PoE connection remains active when running on Aux power, if the camera is connected to a PoE-enabled port on a switch, the switch by default will allocate some of its overall power budget to that port.

Connecting to External Devices

External devices are connected to the camera through pluggable terminal blocks. For the locations of the terminals, see *Camera Module* on page 1.

The pinout for the I/O terminal block is shown in the following diagram:

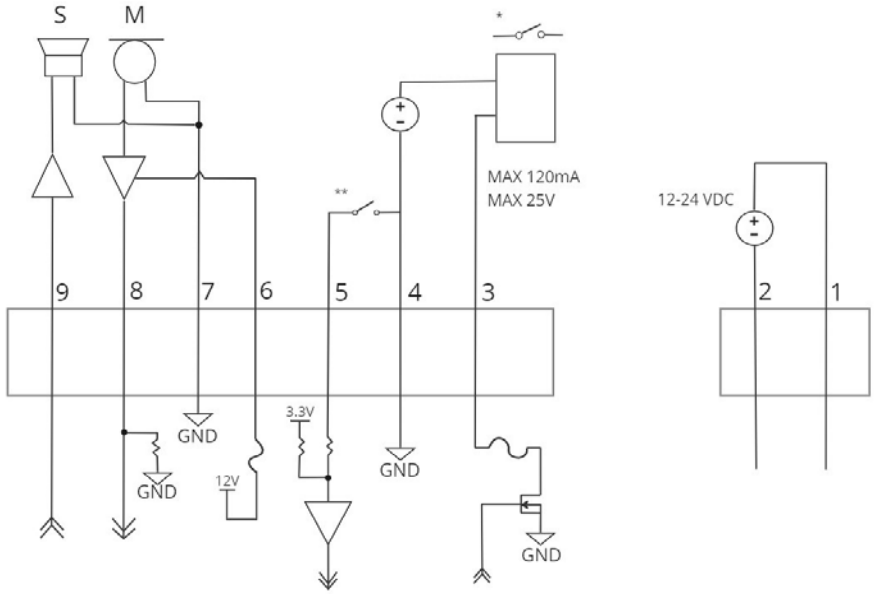

1. AUX1 – Auxiliary Power Wire. Takes DC aux power only.
2. AUX2 – Auxiliary Power Wire. Takes DC aux power only.
3. Digital Output
4. Ground
5. Digital Input
6. Voltage Output (Max 50mA)
7. Audio Ground
8. Audio Input (line level)
9. Audio Output (line level)

* – Relay
** – Switch
M – Microphone
S – Speaker

Connection Status LED Indicator

Once connected to the network, the green Connection Status LED indicator will display the progress in connecting to the Network Video Management software.

The following table describes what the LED indicator shows:

Connection State	Connection Status LED Indicator	Description
Obtaining IP Address	One short flash every second	Attempting to obtain an IP address.
Discoverable	Two short flashes every second	Obtained an IP address but not connected to the Network Video Management software.
Upgrading Firmware	Two short flashes and one long flash every second	Updating the firmware.
Connected	On	Connected to the Network Video Management software. The default connected setting can be changed to Off using the camera's web user interface. For more information, see the *Pelco Sarix Enhanced 4 and 4P Dome Operations Manual*.

Troubleshooting Network Connections and LED Behavior

NOTE

For any of the below LED behaviors, ensure that the camera is getting power and is using a good network cable before trying another solution.

LED Behavior	Suggested Solution
Green LED is off and amber is on	Perform a factory reset of the camera using the physical firmware revert button. Resetting through the camera's web interface will not produce the desired result.
Both LEDs are off and the camera is not connected or streaming video	If the LEDs are not disabled, perform a factory reset of the camera using the physical firmware revert button. Resetting through the camera's web interface will not produce the desired result.
Both LEDs are blinking several times at the same time, then pause and repeat the blinking	Perform a factory reset of the camera using the physical firmware revert button. Resetting through the camera's web interface will not produce the desired result.
A different LED blinking pattern than	Perform a factory reset of the camera using the physical

LED Behavior	Suggested Solution
those described above	firmware revert button. Resetting through the camera's web interface will not produce the desired result.

Resetting to Factory Default Settings

If the device no longer functions as expected, you can choose to reset the device to its factory default settings.

Use the firmware revert button to reset the device. The firmware revert button is shown in the following diagram:

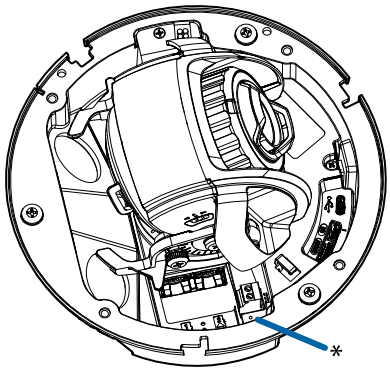

Figure 1: The firmware revert button on the dome camera.

1. Ensure the device is powered on.
2. Using a straightened paperclip or similar tool, gently press and hold the firmware revert button.
3. Release the button after three seconds.

> **CAUTION**
> Do not apply excessive force. Inserting the tool too far may damage the camera.

Cleaning

Dome Bubble

If the video image becomes blurry or smudged in areas, it may be because the dome bubble requires cleaning.

To clean the dome bubble:

- Use hand soap or a non-abrasive detergent to wash off dirt or fingerprints.
- Use a microfiber cloth or non-abrasive fabric to dry the dome bubble.

IMPORTANT

Failure to use the recommended cleaning materials may result in a damaged or scratched dome bubble. A damaged dome bubble may negatively impact image quality and cause unwanted IR light reflecting into the lens.

Body

- Use a dry or lightly dampened cloth to clean the camera body.
- Do not use strong or abrasive detergents.

Limited Warranty and Technical Support

Pelco warranty terms for this product are provided at pelco.com/warranty.

Warranty service and technical support can be obtained by contacting Pelco Technical Support: pelco.com/contact.

Pelco Troubleshooting Contact Information

For further assistance, contact Pelco Product Support at 1-800-289-9100 (USA and Canada) or +1-559-292-1981 (international).

Do not try to repair the unit yourself. Leave maintenance and repairs to qualified technical personnel only.

PELCO
a Motorola Solutions Company