GeoVision inc
The Vision of Security

GV-IP Camera

User's Manual

- GV-ABL / TBL Series
- GV-ADR / TDR Series
- GV-AVD / TVD Series
- GV-BLFC5800
- GV-EBD Series
- GV-EBDP / TBLP Series
- GV-EBFC5800
- GV-FER5702
- GV-PTZ5810-IR
- GV-TFD Series
- GV-TMS8800

Before attempting to connect or operate this product,
please read these instructions carefully and save this manual for future use.

UBN-UM-ZH

© 2024 GeoVision, Inc. All rights reserved.
Under the copyright laws, this manual may not be copied, in whole or in part, without the written consent of GeoVision.

Every effort has been made to ensure that the information in this manual is accurate. GeoVision, Inc. makes no expressed or implied warranty of any kind and assumes no responsibility for errors or omissions. No liability is assumed for incidental or consequential damages arising from the use of the information or products contained herein. Features and specifications are subject to change without notice.

GeoVision, Inc.
9F, No. 246, Sec. 1, Neihu Rd.,
Neihu District, Taipei, Taiwan
Tel: +886-2-8797-8377
Fax: +886-2-8797-8335
http://www.geovision.com.tw

Trademarks used in this manual: *GeoVision*, the *GeoVision* logo and GV series products are trademarks of GeoVision, Inc. *Windows* is the registered trademark of Microsoft Corporation.

December 2024

Scan the following QR codes for product warranty and technical support policy:

[Warranty] **[Technical Support Policy]**

Preface

Welcome to the *GV-IP Camera User's Manual*.

IMPORTANT: The features described in the manual vary among camera models and firmware versions. Some features may not be available in your camera.

This Manual is designed for the following models:

Model	Model Number
IR Eyeball Dome	GV-EBD2702 / 2704 / 2705
	GV-EBD4700 / 4701 / 4704 / 4711 / 4712 / 4813
	GV-EBD8700 / 8711 / 8800 / 8813
	GV-EBFC5800
Bullet IP Camera	GV-ABL2701 Series / 2702 / 2703 Series
	GV-ABL4701 Series / 4703 / 4711 / 4712
	GV-ABL8712
	GV-TBL2703 Series / 2705 / 2706 / 2718 / 4700 / 4703 / 4705 / 4710 / 4711 / 4807 / 4810
	GV-TBL8710 / 8804 / 8810
	GV-BLFC5800
Mini Fixed IP Dome	GV-TFD4700 / 4800
Mini Fixed Rugged IP Dome	GV-ADR2701 / 2702
	GV-ADR4701 / 4702
	GV-TDR2700 / 2702 / 2704 / 2705
	GV-TDR4700 Series / 4702 Series / 4703 Series / 4704 Series / 4803 Series
	GV-TDR8805
Multi-Sensor IP Camera	GV-TMS8800
Panoramic IP Camera	GV-TBLP5800 / 8800
	GV-EBDP5800 / 8800
Vandal Proof IP Dome	GV-AVD2700
	GV-AVD4710
	GV-AVD8710
	GV-TVD2712 / 4700 / 4710 / 4711 / 4810 / 4811
	GV-TVD8710 / 8810
IR Fisheye Rugged IP Camera	GV-FER5702
IR Mini PTZ Camera	GV-PTZ5810-IR

Contents

Naming Definition vi

Note for Connecting to GV-VMS / DVR / NVR vii

Note for Installing Camera Outdoor vii

Note for Powering the Camera vii

Chapter 1 Introduction 1

1.1 GV-EBD / EBFC / EBDP Series 1

1.1.1 Packing List 3

1.1.2 Optional Accessories 3

1.1.3 Overview 4

1.1.3.1 GV-EBD2702 / 2704 / 2705 / 4700 / 4701 / 4704 / 8700 / 8800 and GV-EBFC5800 4

1.1.3.2 GV-EBD4711 / 4712 / 4813 / 8711 / 8813, GV-EBDP5800 / 8800 5

1.1.4 Installation 6

1.1.4.1 GV-EBD2702 / 2704 / 2705 / 4700 / 4701 / 4704 / 8700 / 8800 and GV-EBFC5800 6

1.1.4.2 GV-EBD4711 / 4712 / 4813 / 8711 / 8813, GV-EBDP5800 / 8800 9

1.1.5 Optional Installation 12

1.1.5.1 GV-Mount211P 13

1.1.5.2 GV-Mount212P 19

1.1.5.3 GV-Mount420 + GV-Mount211P 23

1.1.5.4 GV-Mount212P + GV-Mount107 26

1.2 GV-ABL / BLFC / TBL / TBLP Series 28

1.2.1 Packing List 29

1.2.2 Optional Accessories 30

1.2.3 Overview 30

1.2.3.1 GV-ABL2701 / 2703 / 4701 / 4703, TBL2703 / 2705 / 2706 / 4703 / 4705 / 8804, TBLP5800 / 8800 30

1.2.3.2 GV-ABL2702 / 4711 / 4712 / 8712, TBL4700 / 4710 / 4711 / 4807 / 4810 / 8710 / 8810, and BLFC5800 32

1.2.4 Installation 33

1.2.5 Optional Installation 36

1.2.5.1 GV-Mount502 38

1.2.5.2 GV-Mount503 41

1.2.5.3 GV-Mount420 + GV-Mount503 44
1.2.5.4 GV-Mount504 46
1.2.5.5 GV-Mount440 + GV-Mount502 48
1.2.5.6 GV-Mount440 + GV-Mount504 50
1.2.5.7 GV-Mount924 52
1.3 GV-ADR / TDR Series 53
1.3.1 Packing List 54
1.3.2 Optional Accessories 55
1.3.3 Overview 55
1.3.4 Installation 56
1.3.5 Optional Installation 59
1.3.5.1 GV-Mount213 60
1.3.5.2 GV-Mount924 64
1.4 GV-AVD / TVD Series 65
1.4.1 Packing List 66
1.4.1.1 GV-TVD4711 / TVD4811 66
1.4.1.2 GV-AVD / TVD Series 67
1.4.2 Optional Accessories 69
1.4.3 Overview 74
1.4.3.1 GV-AVD2700 / 4710 / 8710, GV-TVD4700 / 4710 / 4810 / 8710 / 8810 69
1.4.3.2 GV-TVD4711 / TVD4811 70
1.4.3.3 GV-TVD2712 71
1.4.4 Installation 71
1.4.4.1 GV-AVD2700 / 4710 / 8710, GV-TVD4700 / 4710 / 4810 / 8710 / 8810 72
1.4.4.2 GV-TVD4711 / TVD4811 74
1.4.5 Optional Installation 75
1.4.5.1 GV-Mount211-2 76
1.4.5.2 GV-Mount212-2 78
1.4.5.3 GV-Mount420 + GV-Mount211-2 81
1.4.5.4 GV-Mount606 82
1.5 GV-TFD Series 84
1.5.1 Packing List 84
1.5.2 Optional Accessories 85
1.5.3 Overview 85
1.5.3.1 GV-TFD4700 / 4800 85

1.5.4 Installation 86
1.5.4.1 GV-TFD4700 / 4800 86
1.5.5 Optional Installation 87
1.6 GV-FER5702 88
1.6.1 Packing List 88
1.6.2 Optional Accessories 89
1.6.3 Overview 89
1.6.3.1 GV-FER5702 89
1.6.4 Installation 90
1.6.5 Optional Installation 92
1.7 GV-PTZ5810-IR 93
1.7.1 Packing List 93
1.7.2 Optional Accessories 94
1.7.3 Overview 94
1.7.3.1 GV-PTZ5810-IR 94
1.7.4 Installation 95
1.7.5 Optional Installation 97
1.8 GV-TMS8800 98
1.8.1 Packing List 98
1.8.2 Optional Accessories 99
1.8.3 Overview 99
1.8.3.1 GV-TMS8800 99
1.8.4 Installation 100
1.8.5 Optional Installation 100
1.9 System Requirements 101
1.10 Waterproofing the Cable 102
Chapter 2 Accessing the Camera 104
2.1 Installing on a Network 104
2.1.1 Looking up the Dynamic IP Address and Logging In 105
2.1.2 Configuring the IP Address 105
2.2 Accessing Live View 106
2.2.1 Digital Zoom 110
2.2.2 Start Recording 110
2.3 PTZ Control Panel 111
2.3.1 Accessing the PTZ Control Panel 111
2.3.2 Setting Presets 113
2.3.3 Setting a Patrol 114

2.4 Playing Back Recorded Videos 118
2.4.1 Recording Download 119
Chapter 3 Administrator Mode 121
3.1 Common 124
3.1.1 Basic Info 124
3.1.2 Local Parameters 125
3.2 Network 127
3.2.1 Network 127
3.2.2 DNS 128
3.2.3 Port 129
3.2.4 DDNS 130
3.2.5 E-mail 132
3.2.6 SNMP 133
3.2.7 802.1x 134
3.2.8 QoS 135
3.2.9 WebSocket 136
3.3 Video & Audio 137
3.3.1 Video 137
3.3.2 Snapshot 139
3.3.3 Audio 141
3.3.4 ROI 142
3.3.5 Media Stream 143
3.4 PTZ 145
3.4.1 Basic Settings 145
3.4.2 Home Position 146
3.4.3 Limit 146
3.4.4 Remote Control 147
3.4.5 Patrol 148
3.4.6 Orientation 149
3.5 Image 150
3.5.1 Image 150
3.5.2 OSD 156
3.5.3 Privacy Mask 158
3.6 Intelligent 159
3.6.1 Smart Settings 159
3.6.1.1 Cross Line 162
3.6.1.2 Intrusion 164

3.6.1.3 Object Removed 167
3.6.1.4 Object Left Behind 168
3.6.1.5 Defocus 169
3.6.1.6 Scene Change 170
3.6.1.7 Face Detection 171
3.6.1.8 People Counting 174
3.6.1.9 Human Body Detection 176
3.6.2.10 Enter Area / Leave Area 177
3.6.2.11 Crowd Density Monitoring 179
3.6.2 Advanced Settings 180
3.6.3 Attribute Collection 181
3.7 Events 182
3.7.1 Motion Detection 182
3.7.2 Tampering Alarm 185
3.7.3 Audio Detection 186
3.7.4 Alarm Input 187
3.7.5 Alarm Output 188
3.7.6 One-Key Shielding Linkage 189
3.8 Storage 190
3.8.1 Formatting Storage 190
3.8.2 FTP 193
3.8.3 Backing Up Storage 196
3.9 Security 197
3.9.1 User 197
3.9.2 Network Security 198
3.10 System 202
3.10.1 Time 202
3.10.2 Server 204
3.10.3 Maintenance 205
3.10.4 Network Diagnosis 206
3.10.5 Log 206
3.10.6 Ports and Devices 207
Chapter 4 Advanced Applications 208
4.1 Upgrading System Firmware 208
4.1.1 Using the Web Interface 209
4.1.2 Using GV-IP Device Utility 210
4.2 Restoring to Factory Default Settings 211

Chapter 5 DVR / NVR / VMS 212

5.1 Setting Up IP Cameras on GV-DVR / NVR 213

5.2 Setting Up IP Cameras on GV-VMS 216

Appendix 218

A. RTSP Multicast Protocol Support 218

B. RTSP Protocol Support 218

C. HTTP Protocol Support 219

D. Compatible Versions of GV-VMS / DVR / NVR.....220

E. GV-Mount Dimensions 223

F. GV-Mount300-2 / 310-2 227

G. Screw Position Chart.....230

H. Note for Fisheye Camera with IR LED.....231

I. Retrieve Camera's Password.....231

J. Installation Guidelines for Perimeter Protection.....231

K. Installation Guidelines for People Flow Counting.....234

L. Installation Guidelines for Crowd Density Monitoring 236

M. Installation Guidelines for People Flow Counting 237

N. Installation Guidelines for Face Detection (Non-AI) 240

O. Installation Guidelines for People Counting (Non-AI) 241

Naming Definition

GV-DVR / NVR	GeoVision Analog and Digital Video Recording Software. The GV-DVR also refers to **GV-Multicam System** or **GV-Hybrid DVR**.
GV-VMS	GeoVision Video Management System for IP cameras.

Note for Connecting to GV-VMS / DVR / NVR

The GV-IPCAM in this Manual is designed to work with and record on GV-VMS / DVR / NVR, a video management system.

- Once the camera is connected to the GV-VMS / DVR / NVR, the resolution set on the GV-VMS / DVR / NVR will override the resolution set on the camera's Web interface. You can only change the resolution settings through the Web interface when the connection to the GV-VMS / DVR / NVR is interrupted.
- The login password of the camera cannot contain the character "&" or any whitespace when connecting to GV-VMS.
- The Video Analytic features under Intelligent (see *3.6 Intelligent*) cannot be integrated with GV-VMS / DVR / NVR.

Note for Installing Camera Outdoor

When installing the camera outdoor, be sure that:

1. The camera is set up above the junction box to prevent water from entering the camera along the cables.

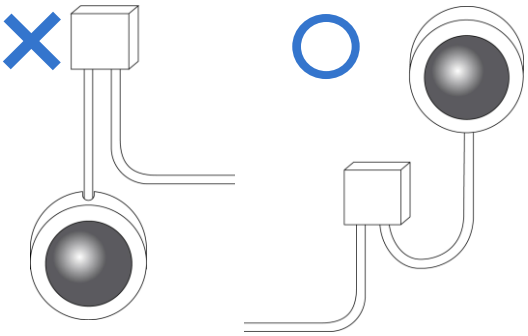

2. Any PoE, power, audio and I/O cables are waterproofed using waterproof silicon rubber or the like.

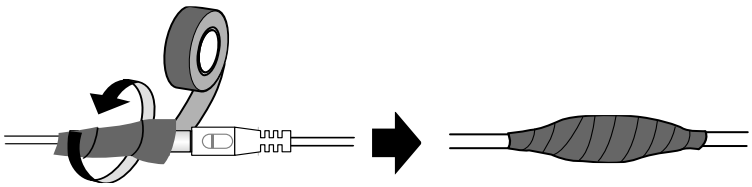

3. The screws are tightened and the cover is in place after opening the camera cover.

Note for Powering the Camera

The camera is powered by PoE or a power adapter. If you want to power the camera using the power connector, an optional power adapter is required.

Chapter 1 Introduction

1.1 GV-EBD / EBFC / EBDP Series

The H.265 Eyeball Dome is an outdoor, network camera equipped with an automatic IR-cut filter and IR LEDs for day and night surveillance. For **GV-EBFC5800**, it's equipped with full color smart warm LEDs for accurate day and night surveillance. The camera adheres to IP67 standards for dust / water protection and supports H.265 video codec to achieve better compression ratio while maintaining high quality image at reduced network bandwidths.

For **GV-EBD4711 / 4712 / 4813 / 8711 / 8813**, with their motorized lenses, the user can zoom and focus the camera from the Web interface.

Model No.		Description
GV-EBD2702	Fixed lens	2 MP, H.265, Low Lux, WDR
GV-EBD2704		2 MP, H.265, Low Lux, WDR Pro
GV-EBD2705		2 MP, H.265, Low Lux, WDR Pro
GV-EBD4700		4 MP, H.265, Super Low Lux, WDR Pro
GV-EBD4701		
GV-EBD4704		
GV-EBD8700		8 MP, H.265, Low Lux, WDR Pro
GV-EBD8800		
GV-EBD4711	Motorized varifocal lens	4 MP, H.265, Super Low Lux, WDR Pro
GV-EBD4712		
GV-EBD4813		
GV-EBD8711		8 MP, H.265, Super Low Lux, WDR Pro
GV-EBD8813		

GV-EBDP5800	Fixed lens	5 MP, H.265, Super Low Lux, WDR Pro, 180° Panoramic
GV-EBDP8800	Fixed lens	8 MP, H.265, Super Low Lux, WDR Pro, 180° Panoramic
GV-EBFC5800	Fixed lens	5 MP, H.265, Super Low Lux, WDR Pro, Warm LED

1.1 Packing List

The packing list varies depending on the model. Product details can be found on the datasheet.

- Eyeball Dome
- Screw Kit

- Drill Template Paster

- Waterproof Rubber Set

- Download Guide

1.1.2 Optional Accessories

Optional accessories can expand the capabilities and versatility of your camera. Accessory details can be found on the datasheet.

1.1.3 Overview

1.1.3.1 GV-EBD2702 / 2704 / 2705 / 4700 / 4701 / 4704 / 8700 / 8800 and GV-EBFC5800

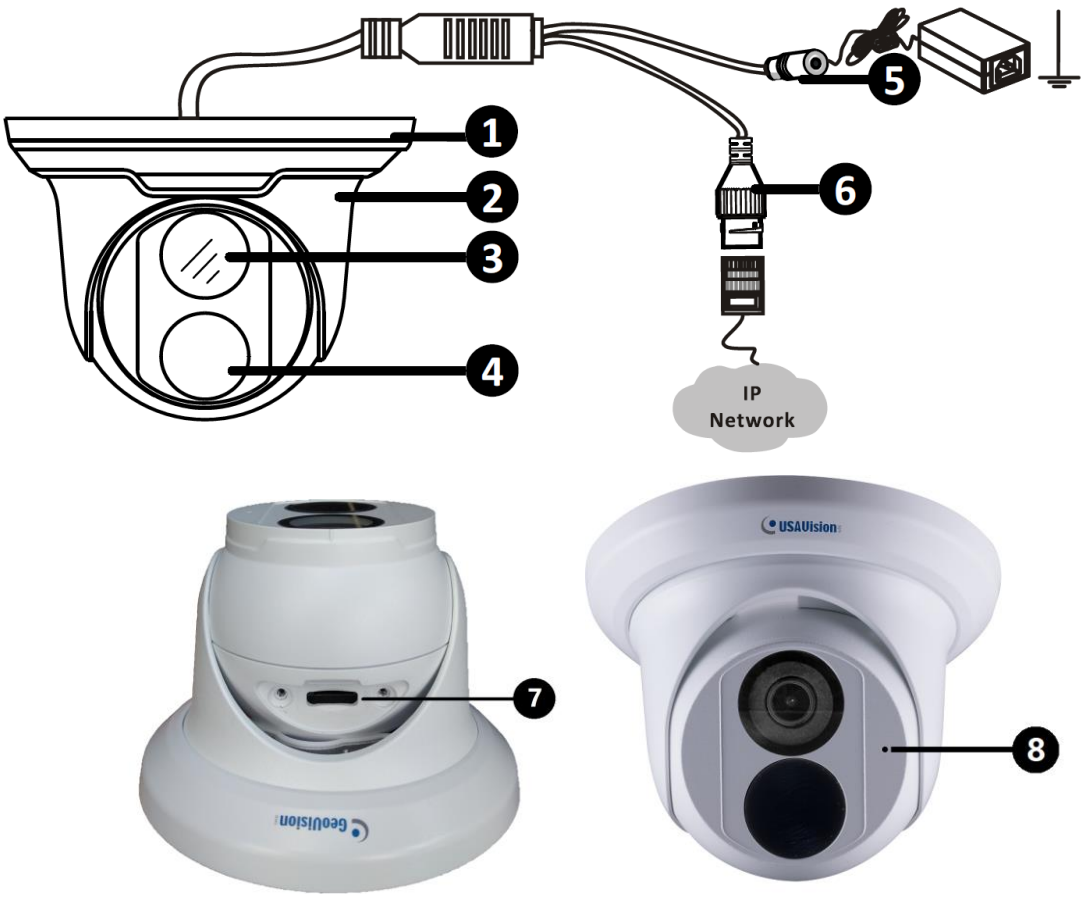

Figure 1-1

No.	Description
1	Bottom ring
2	Housing
3	Lens
4	Infrared indicator / Warm LEDs (GV-EBFC5800 only)
5	Power connector (DC 12 V)
6	Ethernet connector / PoE
7	Micro SD card slot (GV-EBD2704 / 2705 / 4701 / 4704 / 8800 and GV-EBFC5800 only)
8	Microphone (GV-EBD2704 / 2705 / 4701 / 4704 / 8800 and GV-EBFC5800 only)

1.1.3.2 GV-EBD4711 / 4712 / 4813 / 8711 / 8813, GV-EBDP5800 / 8800

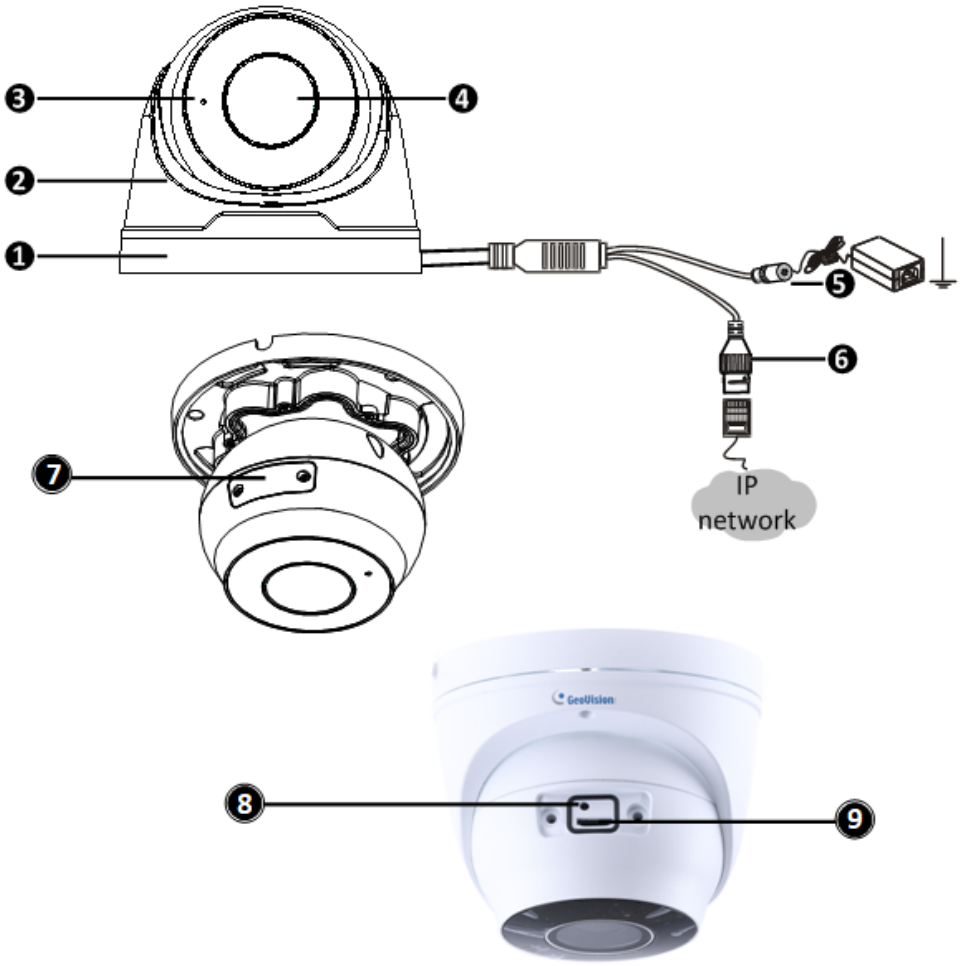

Figure 1-2

No.	Description
1	Bottom ring
2	Housing
3	Microphone
4	Lens
5	Power connector (DC 12 V)
6	Ethernet connector / PoE
7	Micro SD card slot and default button compartment
8	Default button
9	Micro SD card slot

Note: If the default button doesn't respond after pressing for 15 seconds, reboot the camera and try again within 10 minutes of rebooting.

1.1.4 Installation

The Target Eyeball Dome is designed for outdoors. With the standard package, you can install the camera on the ceiling. Alternatively, you can purchase optional mounting accessories to mount the dome on a wall.

Below are the instructions for **Ceiling Mount**. There are two kinds of Ceiling Mount: **Concealed Installation** and **Open Installation**. In concealed installation, the cables are hidden in the ceiling. In Open Installation, the cables are led out from the open slot on the bottom ring.

1.1.4.1 GV-EBD2702 / 2704 / 2705 / 4700 / 4701 / 4704 / 8700 / 8800 and GV-EBFC5800

For Concealed Installation

1. Stick the drill template paster to the ceiling and drill three holes according to the drill template.

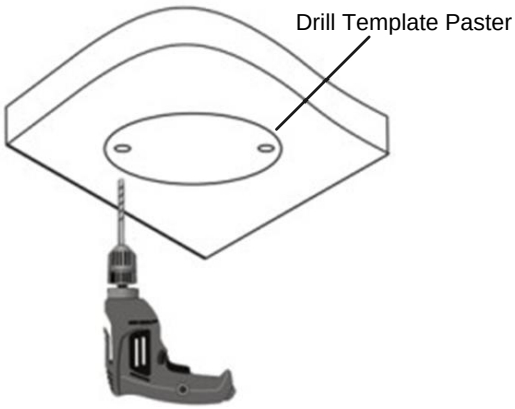

Figure 1-3

2. Insert the screw anchors.

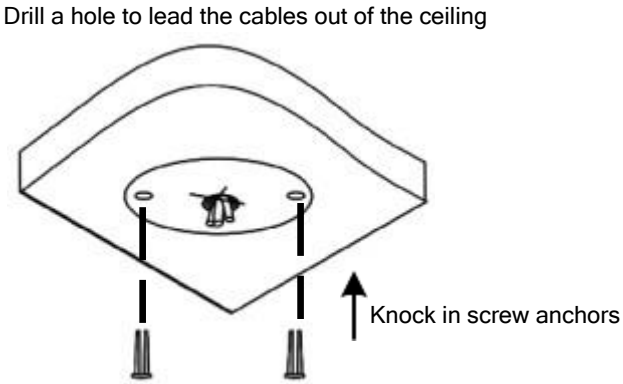

Figure 1-4

3. Remove the bottom ring by turning it anticlockwise.

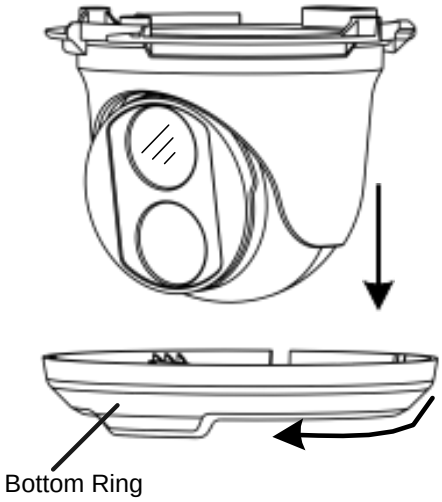

Figure 1-5

4. Connect the cables and secure the camera.

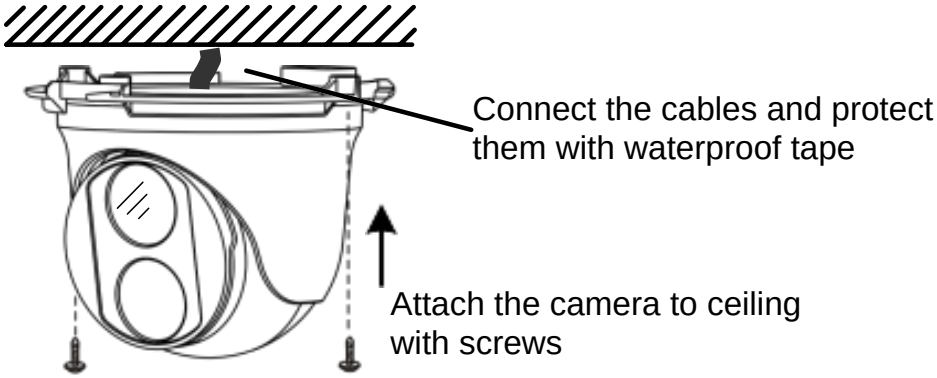

Figure 1-6

5. Adjust the monitoring direction.

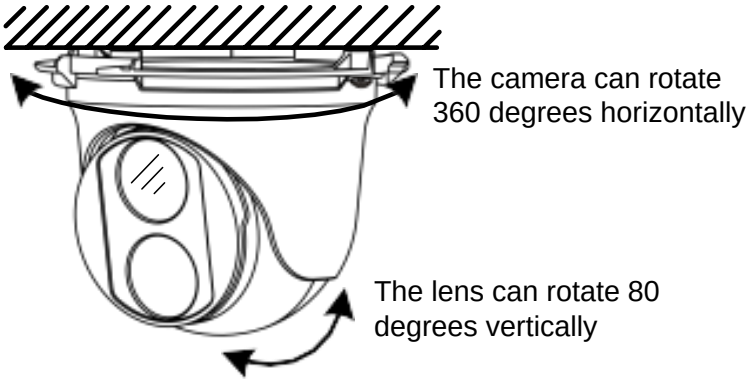

Figure 1-7

6. Mount the bottom ring.

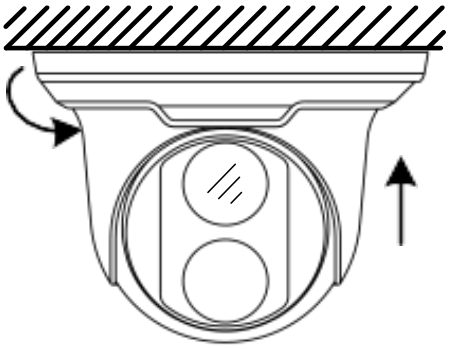

Push the bottom ring back up and turn it clockwise to lock into position

Figure 1-8

For Open Installation

Lead the cables out from the open slot on the bottom ring before screwing the camera to the ceiling as shown in *Figure 1-6*.

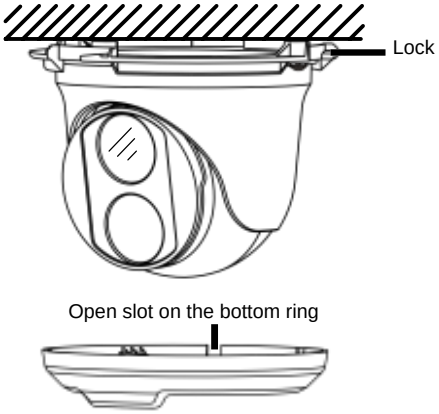

Figure 1-9

Note: To adjust the monitoring direction at *Step 5*, loosen the screw indicated at the Lock position as shown in the figure above. Tighten it when the adjustment is completed.

1.1.4.2 GV-EBD4711 / 4712 / 4813 / 8711 / 8813, GV-EBDP5800 / 8800

For Concealed Installation

1. Stick the drill template paster to the ceiling and drill three holes according to the drill template.

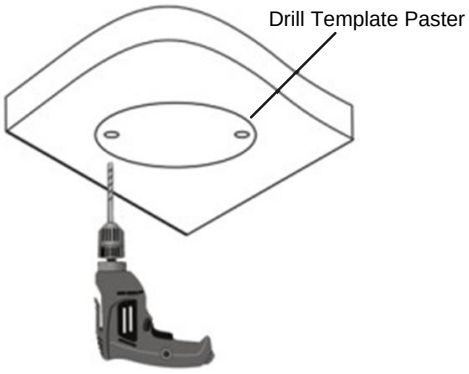

Figure 1-10

2. Insert the screw anchors.

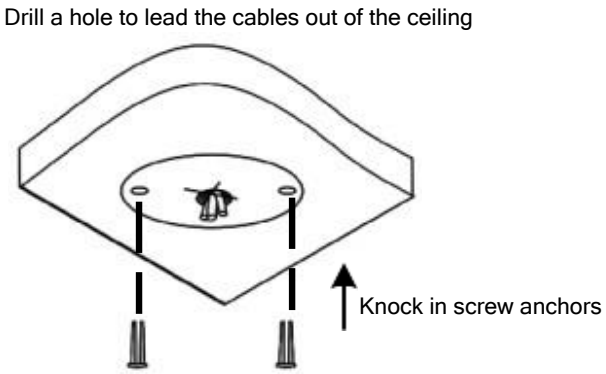

Figure 1-11

3. Loosen the fixing screw and remove the housing by turning it to the position as shown.

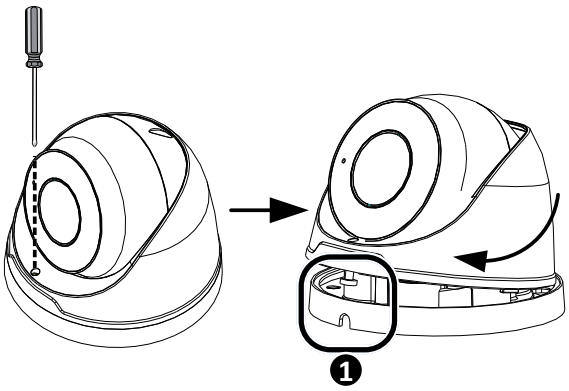

Figure 1-12

4. Secure the bottom ring to the ceiling with 3 supplied screws and connect the cable.

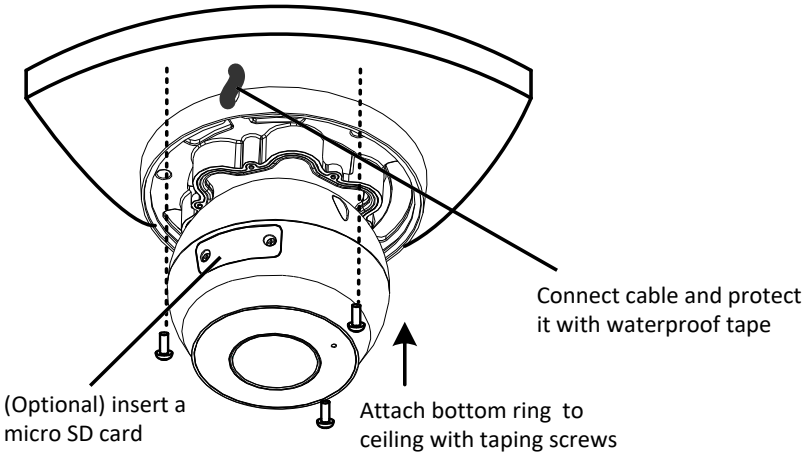

Figure 1-13

5. Mount the housing by adjusting to the position as shown and press and turn to anywhere but ❶.

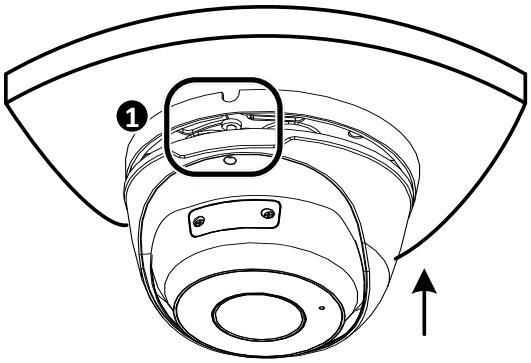

Figure 1-14

6. Adjust the monitoring direction. Then tighten the screw.

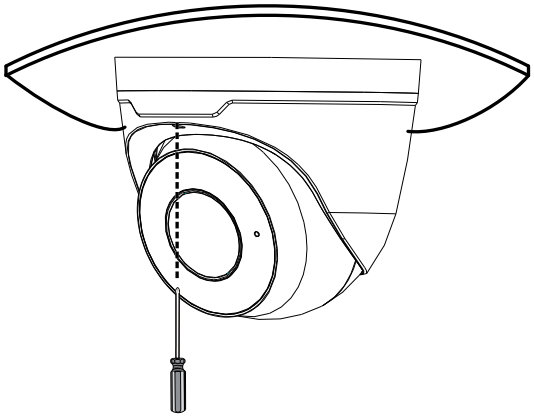

Figure 1-15

WARNING: Make sure the housing is not dismounted from the bottom ring when adjusting the monitoring direction. Unintentional removal of the housing may result in circumstantial damages.

For Open Installation

Lead the cables out from the open slot on the bottom ring before mounting the housing as shown in *Figure 1-14*.

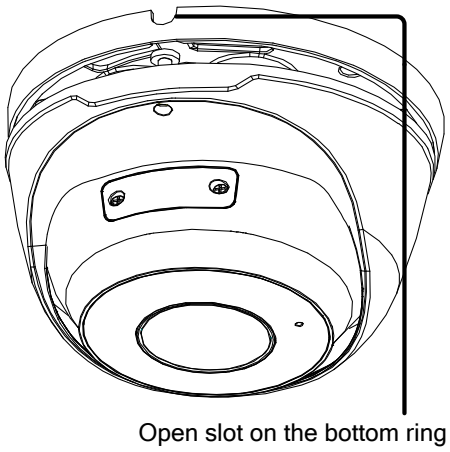

Figure 1-16

1.1.5 Optional Installation

You can optionally purchase the following accessories to fit your mounting environment:

- **GV-Mount107 + GV-Mount212P for Pendant Tube Mount:** see section 1.1.5.4.
- **GV-Mount107 + GV-Mount213 for Pendant Mount**
- **GV-Mount211P + GV-Mount420 for Pole Box Mount**
- **GV-Mount211P for Wall Box Mount**
- **GV-Mount212P for Wall Box Mount:** see section 1.1.5.2.
- **GV-Mount213 for Wall / Ceiling Box Mount**
- **GV-Mount300-2 / 310-2 for Corner Mount**
- **GV-Mount924 for Power Box Mount**

Note: For detailed instructions on GV-EBDP series, see *GV-A/T/EBD Series IP Camera Mount Installation Guide*.

1.1.5.1 GV-Mount211P

Figure 1-17

GV-Mount211P Packing List

• GV-Mount211P	• Long Screw x 5
• Short Screw x 4	• Screw Anchor x 5
• Plastic PG21 Conduit Connector	• Drill Template Paster

1. Unscrew the bracket.

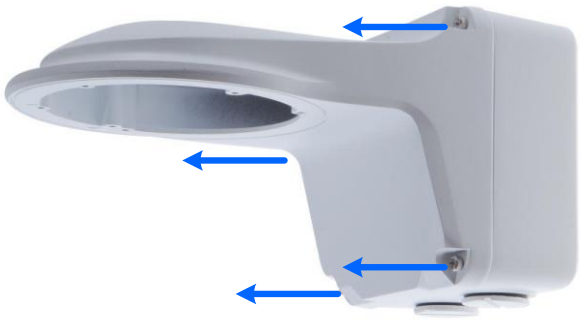

Figure 1-18

2. Loosen the indicated area by turning it anticlockwise.

Figure 1-19

3. Stick the drill template paster to the wall with the arrow pointing up.
4. Drill 4 holes according to the sticker and insert the 4 screw anchors to the 4 holes.
5. Secure the power box to the wall with 4 long screws.

Figure 1-20

6. Remove the bottom ring by turning it anticlockwise.

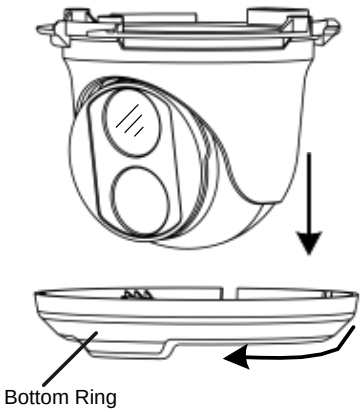

Figure 1-21

7. Secure the camera to the wall mount bracket with the provided short screws according to the screw position for each model:

GV-EBD2705 / 4700 / 4701 / 4704 / 4711 / 4712 / 4813 / 8700 / 8711 / 8800 / 8813, and GV-EBFC5800

Figure 1-22

GV-EBDP5800 / 8800

Figure 1-22-1

GV-EBD2702 / 2704

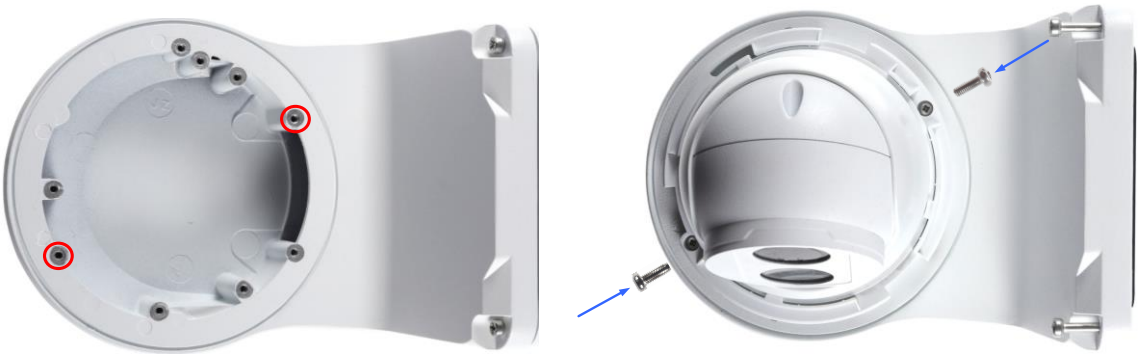

Figure 1-23

GV-ADR2701 / 4701

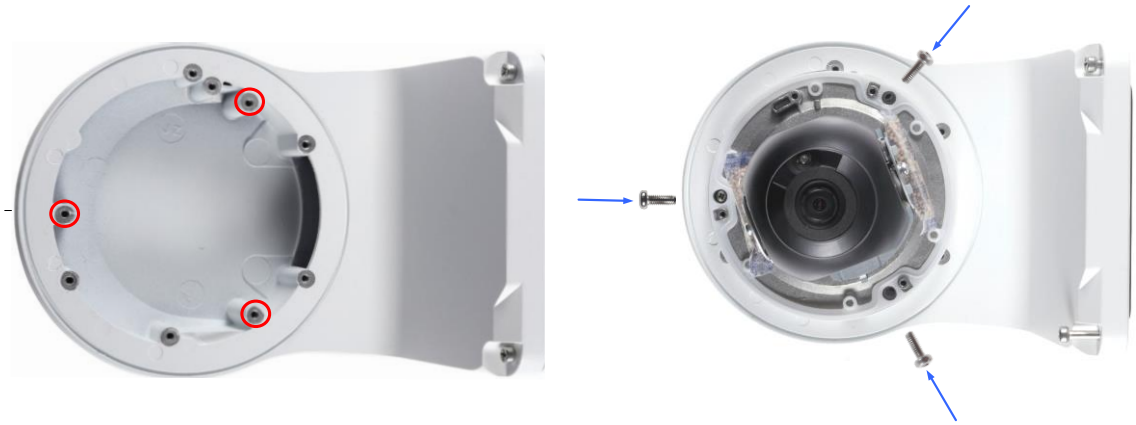

Figure 1-24

GV-ADR2702 / ADR4702 / TDR2700 / TDR2702 / TDR2704 / TDR4700 / TDR4702 / TDR4703 / TDR4704 / TDR4803 / TDR8805

Figure 1-25

GV-TVD4711 / TVD4811

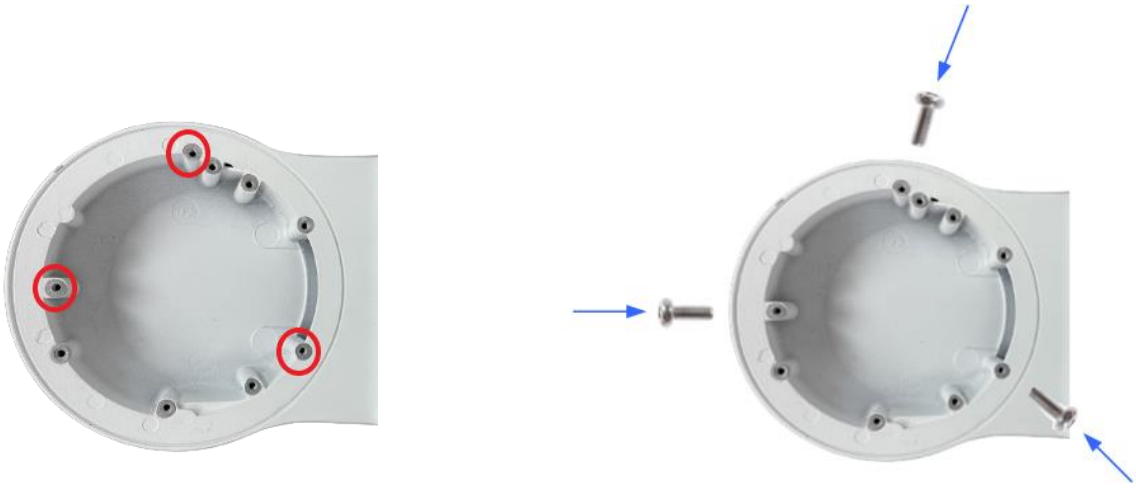

Figure 1-26

8. Thread the Ethernet cable through the PG21 conduit connector and the power box as shown in No. 8, *Figure 1-27*. Then connect the cable to the camera. To waterproof the cable, see *1.8 Waterproofing the Cable*.
9. Rotate the plastic ring to secure the conduit connector to the power box. Screw in the cap as shown in No. 9, *Figure 1-27*.
10. Screw the wall mount bracket to the power box as shown in No. 10, *Figure 1-27*.

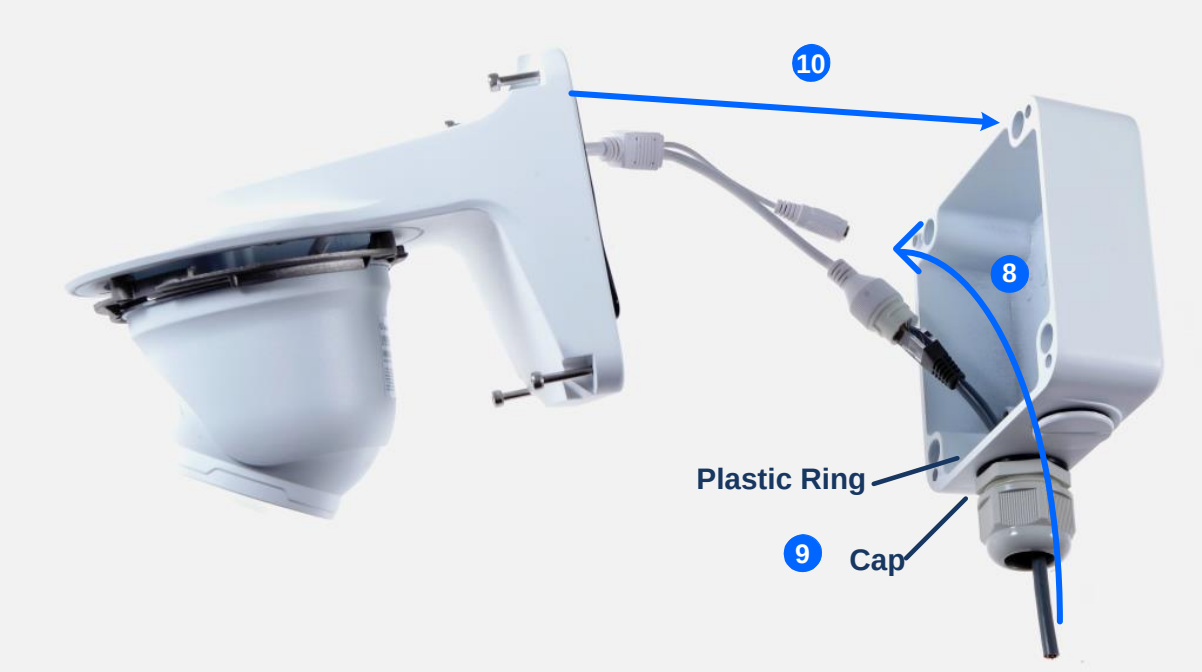

Figure 1-27

11. Mount the bottom ring.

Figure 1-28

1.1.5.2 GV-Mount212P

Figure 1-29

GV-Mount212P Packing List

• GV-Mount212P	• Long Screw x 3
• Short Screw x 3	• Screw Anchor x 3

Standard Installation

1 Attach the wall box to the wall and use a marker to mark the location for the center socket and the screws. Make sure the knob points down.

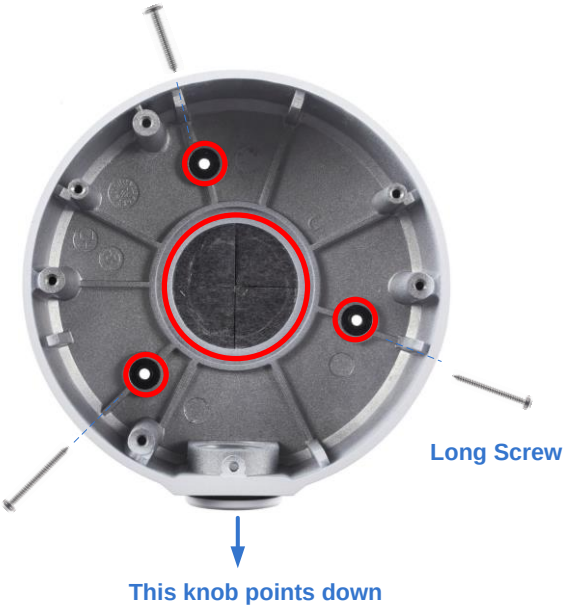

Figure 1-30

2 Drill 3 holes according to the screw location. Then, drill a bigger hole at the center socket location for the Ethernet cable.

3 Insert 3 screw anchors to the screw location and secure the wall box to the wall with 3 long screws.

4. Remove the bottom ring by turning it anticlockwise.

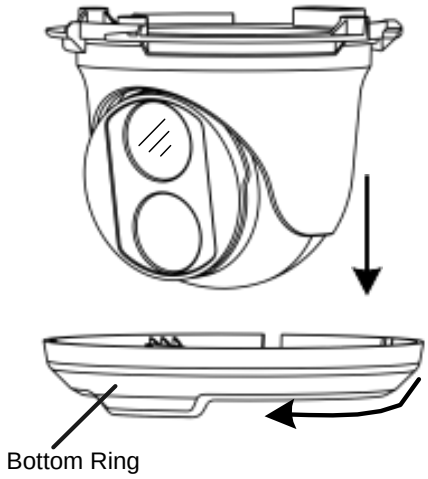

Figure 1-31

5. Thread the Ethernet cable through the center socket and waterproof the Ethernet cable. For details, *see 1.8 Waterproofing the Cable*.

Figure 1-32

6. Fit the cable into the wall box.
7. Secure the camera by locking the provided short screws to the screw position for each model:

GV-EBD2702 / 2704

Figure 1-33

GV-EBD2705 / 4700 / 4701 / 4704 / 4711 / 4712 / 4813 / 8700 / 8711 / 8800 / 8813 and GV-EBFC5800

Figure 1-34

8. Mount the bottom ring.

Note: In addition to the Standard Installation, you can also choose to run the Ethernet cable through a corrugated tube. To do this, you will have to purchase your own conduit connector and corrugated tube. 3/4” NPS is the recommended type of connector. After you secure the wall box to the desired location, remove the knob at the bottom and connect the conduit connector with a self-prepared corrugated tube to the wall box. Then, thread the Ethernet cable through the corrugated tube and waterproof the cable.

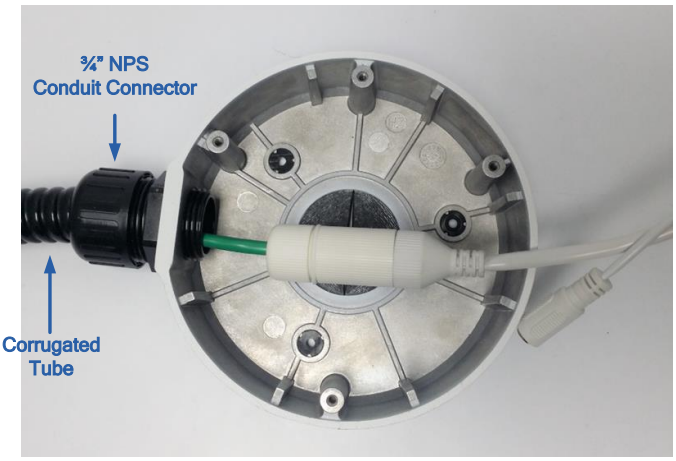

Figure 1-35

1.1.5.3 GV-Mount420 + GV-Mount211P

Figure 1-36

GV-Mount420 Packing List

• GV-Mount420	• M4 Screw x 4
• Additional Screw Kit - M6 Screw x 4 - M6 Nut x 4 - M6 Plain Washer x 4 - M6 Split Washer x 4	

Note: For **GV-ADR** / **TDR** / **EBD Series**, GV-Mount420 can only be used in conjunction with GV-Mount211P.

1. Unscrew the bracket.

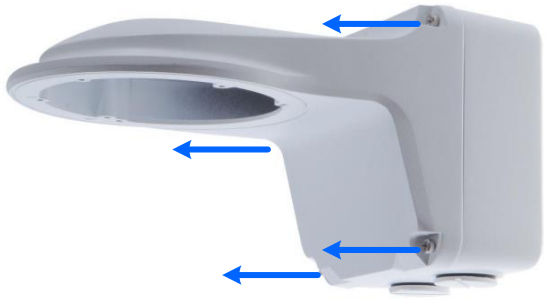

Figure 1-37

2. Loosen the indicated area by turning it anticlockwise.

Figure 1-38

3. Align and attach the power box to the back plate using the 4 supplied M4 screws as indicated.

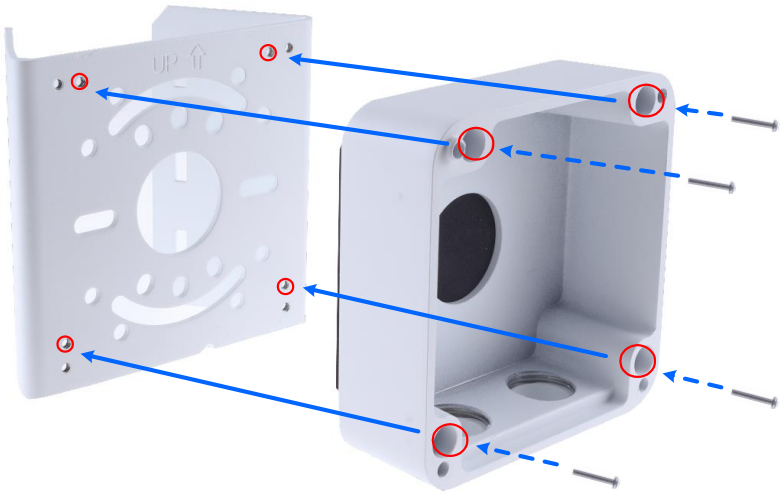

Figure 1-39

Note: Make sure the direction of the “up ↑” indicator on the back plate match that of the power box.

---

4. Thread the 3 steel straps onto the back plate.

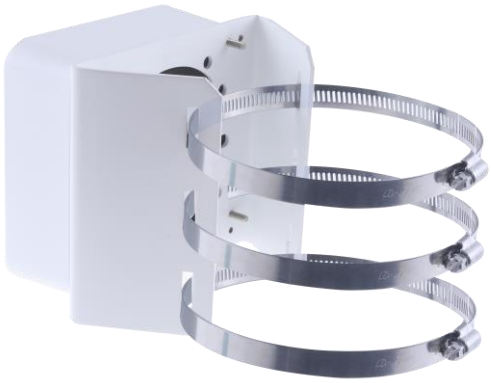

Figure 1-40

5. Follow *Step 6 ~ 12* in *1.1.5.1 GV-Mount211P*.
6. Secure the camera onto the desired pole by tightening the steel straps.

1.1.5.4 GV-Mount212P + GV-Mount107

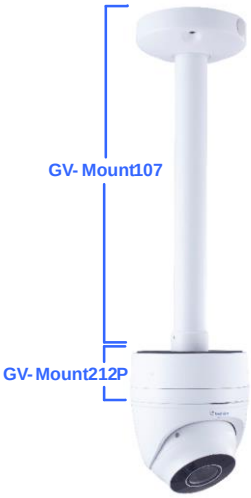

Figure 1-41

GV-Mount107 Packing List

• Pendant Bracket	• Pendant Tube
• Tube Connector	• Torx Wrench

Note: Before installing GV-Mount107, note the following.

- Install your GV-EBD Series camera on a GV-Mount212P by cutting a hole in the center of the mount and thread the camera wires through.

- Prepare 3 long screws for securing the Pendant Bracket to the ceiling.
- GV-Mount107 optionally extends with GV-Mount704.

1. Place GV-Mount107 on the ceiling and mark the location for the center socket and the 3 screws.
2. Drill the marks and secure the Pendant Bracket onto the ceiling.

Figure 1-42

3. Attach one end of the Pendant Tube to the Pendant Bracket, and the other end to the Tube Connector.
4. Thread the necessary wires from the ceiling through the Pendant Tube and connect to the camera wires.

Figure 1-43

5. Push and arrange the connected wires inside Mount212P.
6. Secure the camera onto the Tube Connector.

1.2 GV-ABL / BLFC / TBL / TBLP Series

The Bullet IP Camera is an outdoor, fixed, network camera equipped with an automatic IR-cut filter and an IR LED for day and night surveillance. For **GV-BLFC5800**, it's equipped with full color smart warm LEDs for accurate day and night surveillance. The camera supports H.265 video codec to achieve better compression ratio while maintaining high quality image at reduced network bandwidths. The camera adheres to IP66 / IP67 standards and can be powered through PoE.

Model No.		Description
GV-ABL2701-0F	Fixed lens	2 MP, H.265, Low Lux, WDR
GV-ABL2701-1F		
GV-ABL2702	Varifocal Lens	2 MP, H.265, Low Lux, WDR Pro
GV-ABL2703-0F	Fixed lens	2 MP, H.265, Low Lux, WDR
GV-ABL2703-1F		
GV-ABL4701-0F		4 MP, H.265, Super Low Lux, WDR
GV-ABL4701-1F		
GV-ABL4703		
GV-ABL4711	Motorized varifocal lens	4 MP, H.265, Super Low Lux, WDR Pro
GV-ABL4712	Motorized varifocal lens	4 MP, H.265, Super Low Lux, WDR Pro
GV-ABL8712		8 MP, H.265, Super Low Lux, WDR Pro
GV-TBL2703-0F	Fixed lens	2 MP, H.265, Low Lux, WDR
GV-TBL2703-1F		2 MP, H.265, Low Lux, WDR
GV-TBL2705	Fixed lens	2 MP, H.265, Low Lux, WDR Pro
GV-TBL2706	Fixed lens	2 MP, H.265, Low Lux, WDR Pro
GV-TBL2718	Motorized varifocal lens	2 MP, H.265, Super Low Lux, WDR Pro
GV-TBL4700	Varifocal lens	4 MP, H.265, Super Low Lux, WDR
GV-TBL4703	Fixed lens	
GV-TBL4705	Fixed lens	4 MP, H.265, Super Low Lux, WDR Pro

GV-TBL4710	Motorized varifocal lens	
GV-TBL4711		4 MP, H.265, Super Low Lux, WDR Pro
GV-TBL4810		
GV-TBL8710		8 MP, H.265, Super Low Lux, WDR Pro
GV-TBL8804	Fixed lens	8 MP, H.265, Super Low Lux, WDR Pro, Warm LED
GV-TBL8810	Motorized varifocal lens	8 MP, H.265, Super Low Lux, WDR Pro
GV-TBL4807	Fixed lens	4MP, H.265, Super Low Lux, WDR Pro
GV-TBLP5800	Fixed lens	5MP, H.265, Super Low Lux, WDR Pro, 180° panoramic
GV-TBLP8800	Fixed lens	8MP, H.265, Super Low Lux, WDR Pro, 180° panoramic
GV-BLFC5800	Fixed lens	5 MP, H.265, Super Low Lux, WDR Pro, Warm LED

1.2.1 Packing List

The packing list varies depending on the model. Product details can be found on the datasheet.

- Bullet IP Camera
- Screw Kit
- Download Guide
- Torx Wrench (not available for all models)
- Drill Template Paster
- Waterproof Rubber Set

1.2.2 Optional Accessories

Optional accessories can expand the capabilities and versatility of your camera. Accessory details can be found on the datasheet.

1.2.3 Overview

1.2.3.1 GV-ABL2701 / 2703 / 4701 / 4703, TBL2703 / 2705 / 2706 / 4703 / 4705 / 8804, TBLP5800 / 8800

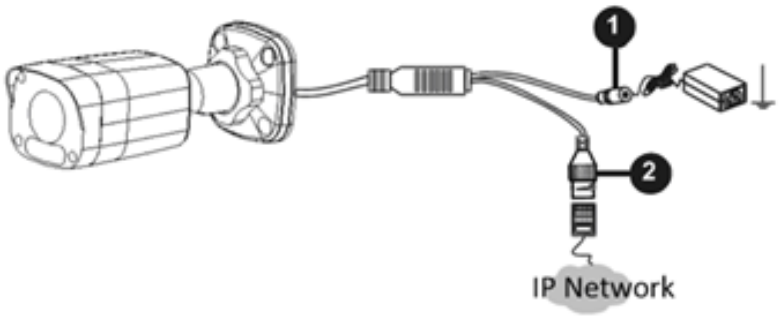

Figure 1-44

No.	Description	No.	Description
1	Power connector (DC 12 V)	2	Ethernet connector / PoE

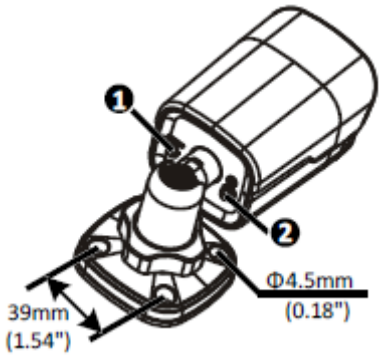

Figure 1-45

No.	Description	No.	Description
1	Load Default button	2	Grounding screw (**GV-TBL8804**)
Note: The Load Default button is for GV-ABL2703 / 4703 & GV-TBL2703 / 4703 / 8804 only.			

	GV-TBL8804	GV-TBL2705 / 2706 / 4705
GV-TBL4807	GV-TBLP5800	GV-TBL2718

Figure 1-46

No.	Description	No.	Description
3	Default button / SD card slot	10	Built-in microphone x 2 (GV-TBL4807)
4	Built-in speaker (GV-TBL8804)	11	IR LED x 4 (GV-TBL4807)
5	Built-in microphone (GV-TBL8804)	12	IR LED x 2 (GV-TBLP5800 / 8800) Built-in microphone (GV-TBLP5800 / 8800)
6	Warm LED x 2 (GV-TBL8804)	13	Built-in microphone (GV-TBLP5800 / 8800)
7	IR LED (GV-TBL8804)	14	Built-in microphone (GV-TBL2718)
8	Built-in microphone (GV-TBL2705 / 2706 / 4705)	15	IR LED x 3 (GV-TBL2718)
9	IR LED x 2 (GV-TBL2705 / 4705) IR LED x 1 (GV-TBL2706)		

Note:

1. The Default button is only available in the following models: GV-ABL2703 / 4703, GV-TBL2703 series / 2718 / 4703 / 4807 / 8804, and GV-TBLP5800 / 8800.
2. If the Default button doesn't respond after pressing for 15 seconds, reboot the camera and try again within 10 minutes of rebooting.
3. For safety precautions, it is recommended to connect a grounding wire to the grounding screw, and do not loosen or remove the grounding screw under any circumstances.

1.2.3.2 GV-ABL2702 / 4711 / 4712 / 8712, TBL4700 / 4710 / 4711 / 4807 / 4810 / 8710 / 8810, and BLFC5800

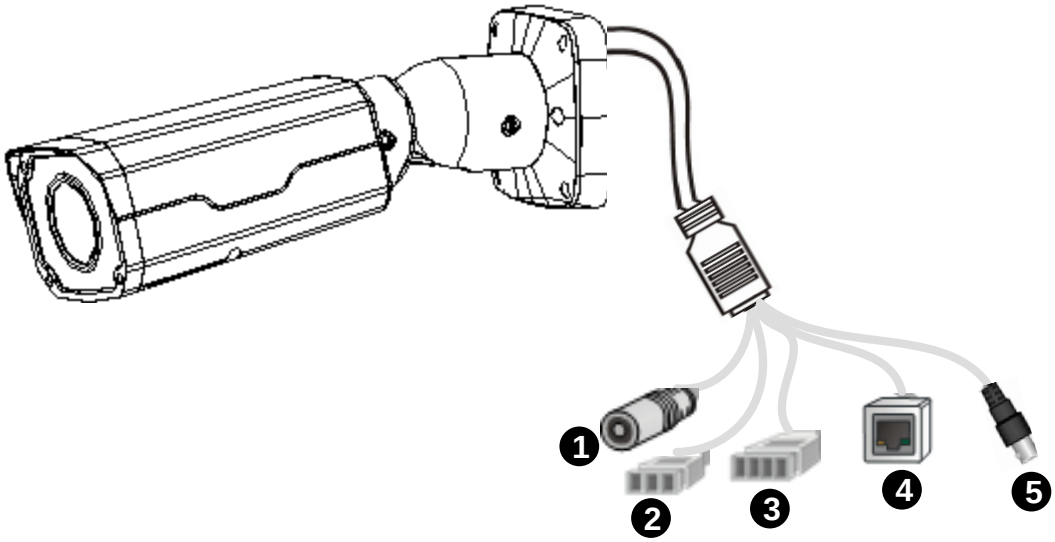

Figure 1-47

No.	Description
1	Power connector (DC 12 V)
2	Audio input / Audio output / GND
3	Alarm input (IN, GND) / Alarm output (N, P)
4	Ethernet connector / PoE
5	Video Output (**GV-ABL8712 / TBL8710** Only)

Note: GV-TBL4807 does not have the terminal blocks for audio input / output (No. 2) and alarm input / output (No. 3). Instead, it features 4 wires for connecting alarm input and output devices.

1.2.4 Installation

The Bullet IP Camera is designed for outdoors. With the standard package, you can install the camera on the wall or ceiling. Or, you can purchase optional mounting accessories to mount your camera on a wall.

Below are the instructions for **Wall Mount**. There are two kinds of Wall Mount: **Concealed Installation** and **Open Installation**. In Concealed Installation, the cables are hidden in the wall. In Open Installation, the cables are led out from the open slot on the base.

For Concealed Installation

Note that the following camera illustrations may differ between models.

1. Optionally loosen the two screws at the bottom of the camera to insert a SD card.

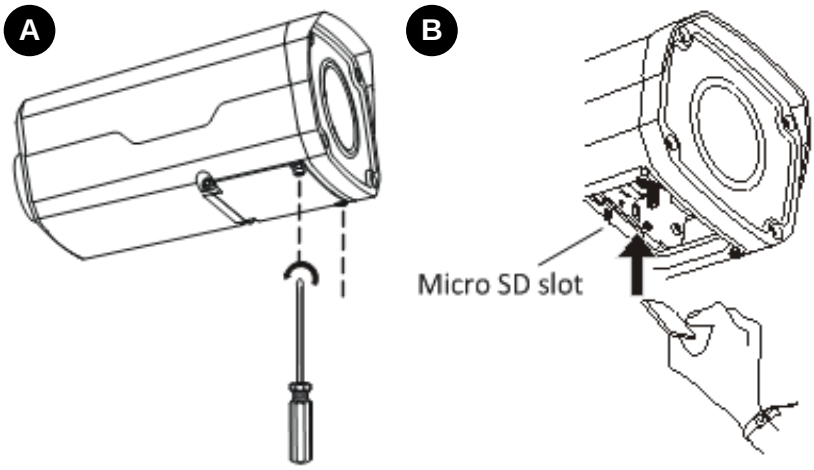

Figure 1-48

2. Stick the drill template paster to the wall and align the cross center to the hole in the wall.

Lead the cables across the hole on the wall.

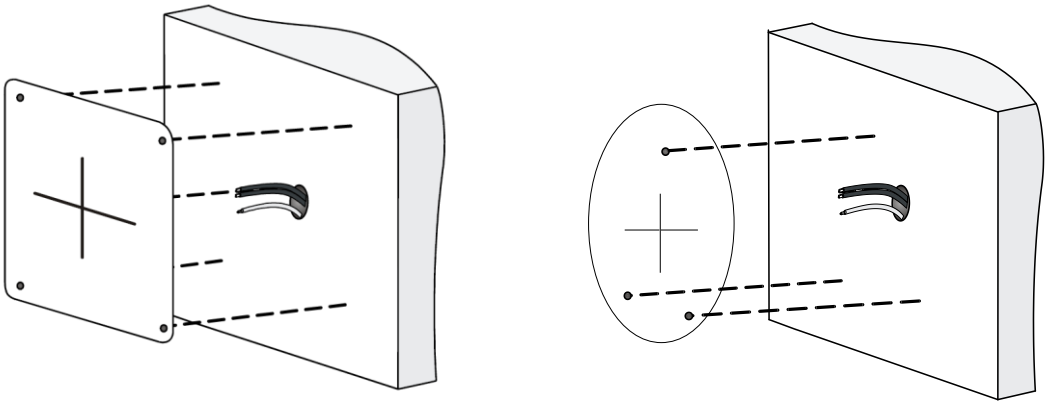

Figure 1-49

3. Drill the holes according to the drill template.

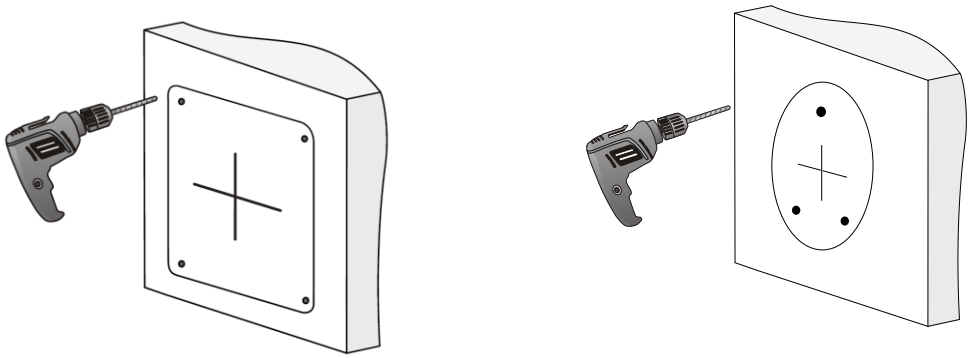

Figure 1-50

4. Insert the screw anchors.

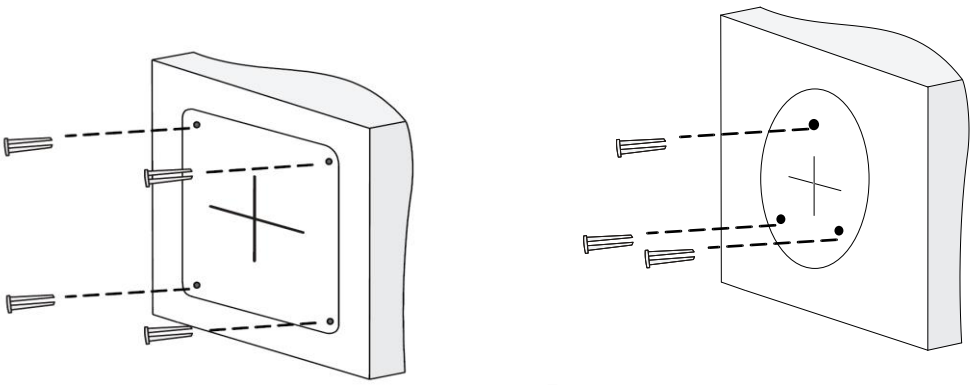

Figure 1-51

5. Screw the locknut and loosen the universal joint before attaching the camera to the wall.

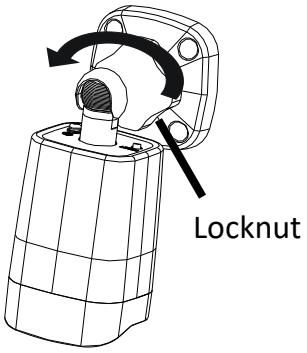

Figure 1-52

6. Secure the camera to the wall and connect all cables.

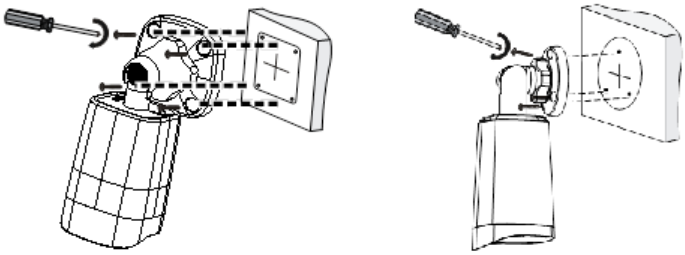

Lead tapping screws through the guide holes in the base and fix them on the wall by using a screwdriver.

Figure 1-53

To adjust the monitoring direction:

GV-ABL2702 / 4711 / 4712 / 8712, **TBL2705 / 2706 / 4700 / 4705 / 4710 / 4711 / 4807 / 4810 / 8710 / 8804 / 8810**, and **BLFC5800**

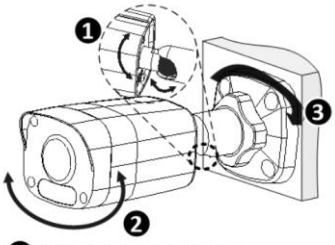

❶ Adjust the opening of the universal joints as required.

❷ Rotate the spherical hinge of the camera to get the desired monitoring direction.

❸ Tighten the locknut.

Figure 1-54

GV-TBL8804 and GV-TBLP5800 / 8800

❶ Loosen the screw to rotate the camera.

❷ Loosen the screw to move the camera upward or downward.

❸ Loosen the locknut to rotate the camera.

Figure 1-55

For Open Installation

Lead the cables out from the open slot on the base before screwing the camera to the wall as shown in *Figure 1-51.*

1.2.5 Optional Installation

You can optionally purchase the following accessories to fit your mounting environment:

- **GV-Mount504 for Wall Mount**
- **GV-Mount440 + GV-Mount504 for Pole Box Mount**
- **GV-Mount504 for Wall Mount**
- **GV-Mount924 for Gang Box Mount**
- **GV-Mount300-2 / 310-2 for Corner Mount**

- **GV-Mount300-2 / 310-2 for Corner Mount**
- **GV-Mount300-2 / 310-2 + GV-Mount504 for Convex Corner Mount**
- **GV-Mount502 for Wall Box Mount:** see section 1.2.5.1.
- **GV-Mount503 for Wall Box Mount:** see section 1.2.5.2.
- **GV-Mount420 + GV-Mount503 for Pole Box Mount:** see section 1.2.5.3.
- **GV-Mount440 + GV-Mount502 for Pole Box Mount:** see section 1.2.5.5.

Note: For detailed instructions on GV-TBLP series and GV-TBL2718, see *GV-A/T/EBD Series IP Camera Mount Installation Guide*.

1.2.5.1 GV-Mount502

Figure 1-56

GV-Mount502 Packing List

• GV-Mount502	• M3 25 mm Screw x 4
• M3 12 mm Screw x 4	• Screw Anchor x 4 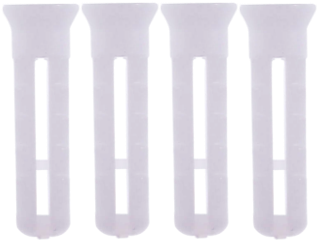
• Plastic PG21 Conduit Connector	

1. Unscrew the box cover.

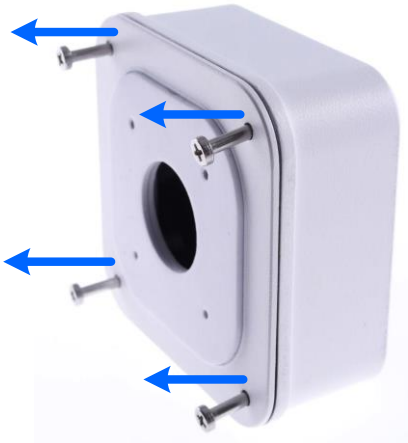

Figure 1-57

2. Loosen the knob by turning it anticlockwise.

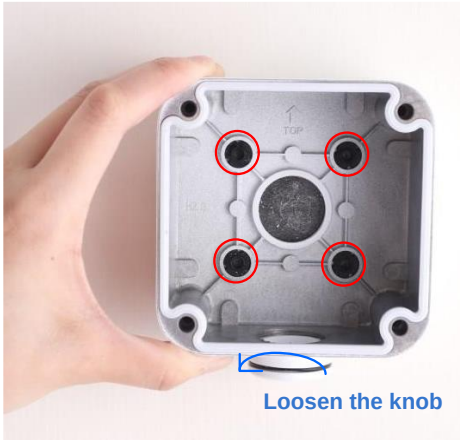

Figure 1-58

3. Attach the box to the wall with the knob pointing down and use a marker to mark 4 dots.
4. Drill 4 holes according to the marks.
5. Insert the 4 screw anchors to the holes and secure the box to the wall with 4 long screws.
6. Secure the camera to the box cover with 4 short screws, as illustrated in No. 6, *Figure 1-59*.
7. Thread the Ethernet cable through the PG21 conduit connector and the wall box, as shown in No. 7, *Figure 1-59*. Then connect the cable to the camera. To waterproof the Ethernet cable, see *1.10 Waterproofing the Cable*.
8. Rotate the plastic ring to secure the conduit connector to the wall box. Screw in the cap, as shown in No. 8, *Figure 1-59*.

9. Screw the box cover to the wall box, as shown in No. 9, *Figure 1-59*.

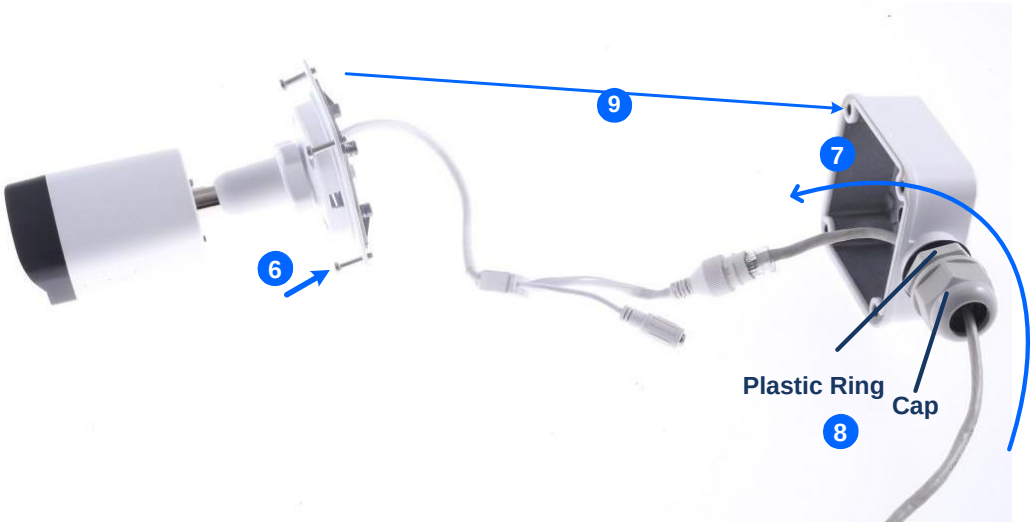

6

Figure 1-59

1.2.5.2 GV-Mount503

Figure 1-60

GV-Mount503 Packing List

• GV-Mount503	• Long Screw x 4
• Short Screw x 4	• Screw Anchor x 4
• Plastic PG21 Conduit Connector	• Waterproof Rubber Plug

1. Unscrew the box cover.

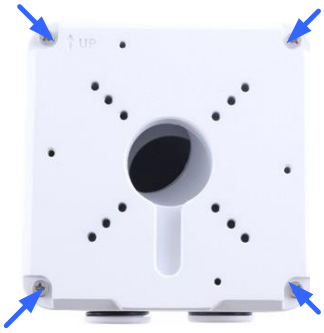

Figure 1-61

2. Loosen the knobs by turning it anticlockwise.

Figure 1-62

3. Attach the box to the wall with the knobs pointing down and use a marker to mark 4 dots.
4. Drill 4 holes according to the marks.
5. Insert 4 screw anchors to the holes and secure the to the wall with 4 long screws.
6. Thread the camera cable through the box cover and secure the camera to the cover with 4 short screws.
7. Reattach the box cover to the power box, as shown in No. 7, *Figure 1-63.*
8. Thread the Ethernet cable through the PG21 conduit connector and the power box as shown in No 8, *Figure 1-63*. Then connect the cable to the camera. To waterproof the cable, see *1.8 Waterproofing the Cable*.
9. Rotate the plastic ring to secure the conduit connector to the power box. Secure in the cap, as shown in No 9, *Figure 1-63.*

10. Secure the box cover to the power box, as shown in No 10, *Figure 1-63.*

Figure 1-63

Note: Alternatively, you can use the supplied waterproof rubber plug to seal the box cover by following the steps below.

1. Thread the camera cable through the box cover, and then through the supplied waterproof rubber plug from the bottom side.

Figure 1-64

2. Align the gap of the waterproof rubber plug to the direction of the “up ↑” indicator and press firmly to embed the waterproof plug onto the inside of the box cover.
3. Thread the Ethernet cable through the power box and connect to the camera. Secure the box cover to the power box.

1.2.5.3 GV-Mount420 + GV-Mount503

Figure 1-65

GV-Mount420 Packing List

• GV-Mount420	• M4 Screw x 4
• Additional Screw Kit - M6 Screw x 4 - M6 Nut x 4 - M6 Plain Washer x 4 - M6 Split Washer x 4	

Note: For **GV-ABL2702** / **4711** / **4712** / **8712** and **GV-TBL4700 / 4710 / 4711 / 4810 / 8710 / 8810**, GV-Mount420 can only be used in conjunction with GV-Mount503.

---

1. Follow *Step 1 & 2* in *1.2.5.2 GV-Mount503*.

2. Align and attach the power box to the back plate using the 4 supplied M4 screws as indicated.

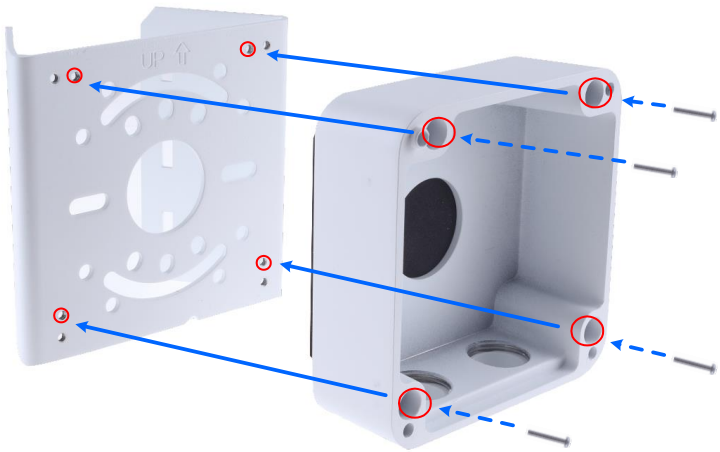

Figure 1-66

Note: Make sure the direction of the "up ↑" indicator on the back plate matches that of the power box.

---

3. Thread the 3 steel straps onto the back plate.

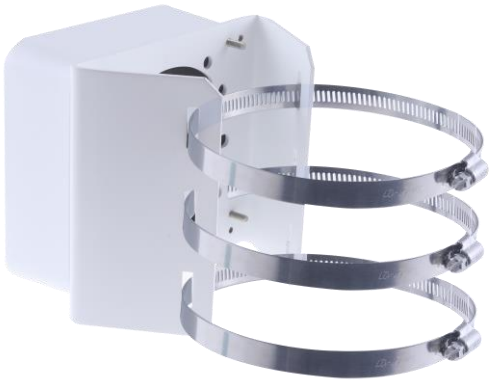

Figure 1-67

4. Follow *Step 6 ~ 10* in *1.2.5.2 GV-Mount503*.
5. Secure the camera onto the desired pole by tightening the steel straps.

1.2.5.4 GV-Mount504

GV-Mount504 Packing List

• GV-Mount504	• Long Screw x 4
• Short Screw x 3	• Screw Anchor x 4
• Drill Template Paster	• Waterproof Rubber Plug
• Plastic PG21 Conduit Connector	

1. Unscrew the box cover.

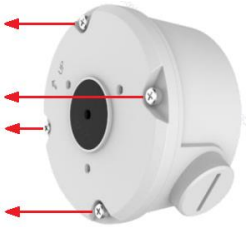

Figure 1-67-1

2. Stick the drill template paster to the wall with the arrow pointing up.
3. Drill the 4 mounting holes according to the drill template.
4. Insert the 4 screw anchors to the mounting holes.

5. Position the power box on the wall with the “up ↑” indicator pointing up and align the screw holes indicated below to the 4 mounting holes on the wall.

Figure 1-68

6. Secure the power box to the wall with the supplied long screws.
7. Thread the Ethernet cable through the center hole (proceed to Step 9) or through the PG21 conduit connector and the power box as shown in No 8, *Figure 1-63* (proceed to Step 8).
8. Rotate the plastic ring to secure the conduit connector to the power box. Secure in the cap, as shown in No 9, *Figure 1-63*.
9. Thread the camera cable through the box cover from the top, and then attach the supplied waterproof rubber plug to the camera cable at around the camera base, as shown in the figure below.

Figure 1-69

10. Press firmly to embed the waterproof plug onto the box cover.
11. Use the supplied short screws to secure the camera to the box cover at the indicated holes below.

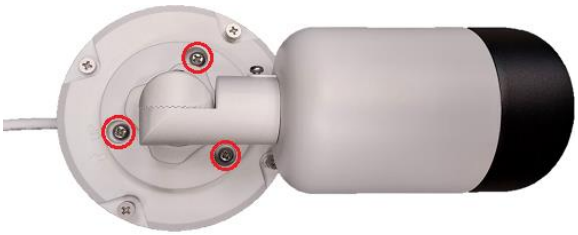

Figure 1-70

12. Connect the Ethernet cable to the camera cable, align the “up ↑” indicators on the box cover and power box, and then secure the box cover to the power box.

1.2.5.5 GV-Mount440 + GV-Mount502

GV-Mount440 Packing List

• GV-Mount440	• M4 Screw x 4

Note: For **GV-ABL2701 / ABL2703 / ABL4701 / ABL4703 / TBL2703 / TBL4703**, GV-Mount440 can only be used in conjunction with GV-Mount502.

1. Follow *Step 1* & *2* in *1.2.5.1 GV-Mount502*.
2. Align and attach the power box to the back plate using the 4 supplied M4 screws as indicated.

Figure 1-71

Note: Make sure the direction of the "up ↑" indicator on the back plate matches that of the power box.

3. Thread the 3 steel straps onto the back plate.

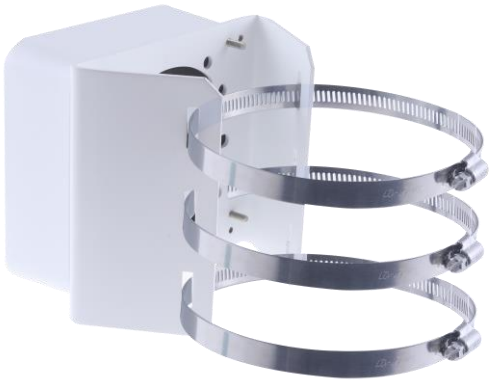

Figure 1-72

4. Follow *Step 6 ~ 9* in *1.2.5.1 GV-Mount502*.
5. Secure the camera onto the desired pole by tightening the steel straps.

1.2.5.6 GV-Mount440 + GV-Mount504

GV-Mount440 Packing List

• GV-Mount440	• M4 Screw x 4

Note: For **GV-TBL2705 / TBL2706 / TBL4705** / **TBL8804, TBLP5800 / 8800**, GV-Mount440 can only be used in conjunction with GV-Mount504.

1. Follow *Step 1* in *1.2.5.4 GV-Mount504*.
2. Align and attach the power box to the back plate using the 4 supplied M4 screws as indicated.

Figure 1-73

Note: Make sure the direction of the "up ↑" indicator on the back plate matches that of the power box.

3. Thread the 3 steel straps onto the back plate.

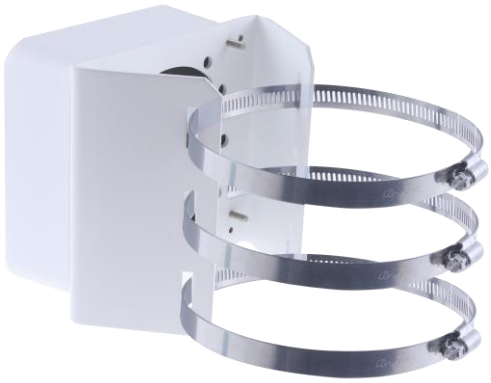

Figure 1-74

4. Follow *Step 7 ~ 12* in *1.2.5.4 GV-Mount504*.
5. Secure the camera onto the desired pole by tightening the steel straps.

1.2.5.7 GV-Mount924

GV-Mount924 Packing List

• GV-Mount924 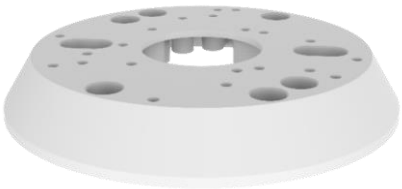	• M3 8 mm Screw x 4

1. Secure the gang box onto the back of GV-Mount924 using the ports indicated below.

Figure 1-75

US Double Gang Box

Figure 1-76

US Single Gang Box

2. Thread the camera's cables through GV-Mount924 and secure the camera onto the mount using the ports indicated below using the supplied screws.

Figure 1-77

1.3 GV-ADR / TDR Series

The IR Mini Fixed Rugged IP Dome is an outdoor, fixed, network camera equipped with an automatic IR-cut filter and an IR LED for day and night surveillance. The camera supports H.265 video codec to achieve better compression ratio while maintaining high quality image at reduced network bandwidths. The **WDR Pro** models can produce clear image for scenes containing contrasting intensity of lights.

Model No.		Description
GV-ADR2701	Fixed lens	2 MP, H.265, Low Lux, WDR
GV-ADR2702-0F		2 MP, H.265, Low Lux, WDR
GV-ADR2702-1F		
GV-ADR4701		4 MP, H.265, Super Low Lux, WDR
GV-ADR4702-0F		
GV-ADR4702-1F		
GV-TDR2700-0F		2 MP, H.265, Low Lux, WDR Pro
GV-TDR2700-1F		
GV-TDR2702-0F		2 MP, H.265, Low Lux, WDR
GV-TDR2702-1F	Fixed lens	2 MP, H.265, Low Lux, WDR
GV-TDR2704-2F		2 MP, H.265, Low Lux, WDR Pro
GV-TDR2704-4F		
GV-TDR2705		2 MP, H.265, Low Lux, WDR Pro
GV-TDR4700-0F		4 MP, H.265, Super Low Lux, WDR Pro
GV-TDR4700-1F		
GV-TDR4702-0F		4 MP, H.265, Super Low Lux, WDR
GV-TDR4702-1F		
GV-TDR4703-2F		4 MP, H.265, Super Low Lux, WDR Pro
GV-TDR4703-4F		
GV-TDR4704-2F		
GV-TDR4704-4F		
GV-TDR4803-2F	Fixed lens	4 MP, H.265, Super Low Lux, WDR Pro
GV-TDR4803-4F		

GV-TDR8805	Fixed lens	5 MP, H.265, Super Low Lux, WDR Pro

1.3.1 Packing List

The packing list varies depending on the model. Product details can be found on the datasheet.

- IR Mini Fixed Rugged IP Dome

- Waterproof Rubber Set

- Screw Kit

- Drill Template Paster
- Download Guide

- Torx wrench (comes with some models)

1.3.2 Optional Accessories

Optional accessories can expand the capabilities and versatility of your camera. Contact your dealer for more information. Accessory details can be found on the datasheet.

1.3.3 Overview

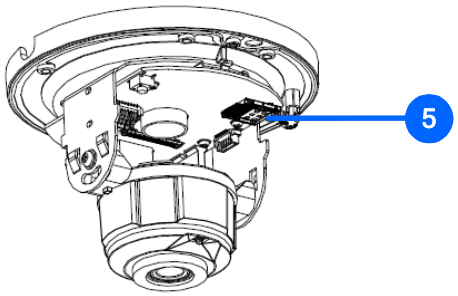

Figure 1-78

No.	Description
1	Ethernet connector / PoE
2	Power connector (DC 12 V)
3	Transparent Dome Cover
4	For GV-TDR2700 / 4700 / 4703 / 4803 series and GV-TDR8805 only, see the table below.
5	Micro SD card slot

Wire Definition

GV-TDR2700 series / 4700 series		GV-TDR4703 series / 4803 series / GV-TDR8805	
Wire	**Definition**	**Wire**	**Definition**
Green	Audio in	Gray	Audio Out
Blue	GND	Purple	GND
Yellow	Alarm Out	Green	Audio In
White	Alarm Out	Brown	GND
Orange	Alarm Input	Orange	Alarm Input
Blue	GND	Blue	GND
Brown	Audio in	Yellow	Alarm Output
Blue	GND	White	Alarm Output
Gray	Audio Out		
Purple	GND		

1.3.4 Installation

The IR Mini Fixed Rugged IP Dome is designed for outdoors. With the standard package, you can install the camera on the ceiling.

Below are the instructions for **Ceiling Mount**. There are two kinds of Ceiling Mount: **Concealed Installation** and **Open Installation**. In Concealed Installation, the cables are hidden in the ceiling. In Open Installation, the cables are led out from the open slot on the camera base.

For Concealed Installation

1. Stick the drill template paster to the ceiling and drill 30-mm deep holes according to the drill template.

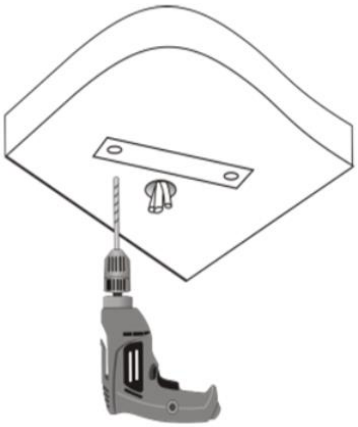

Figure 1-79

2. Insert the screw anchors.

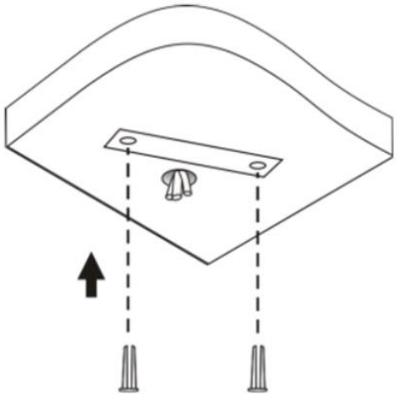

Figure 1-80

3. Unscrew the transparent dome cover with the supplied torx wrench.
4. Connect the cables and secure the camera.

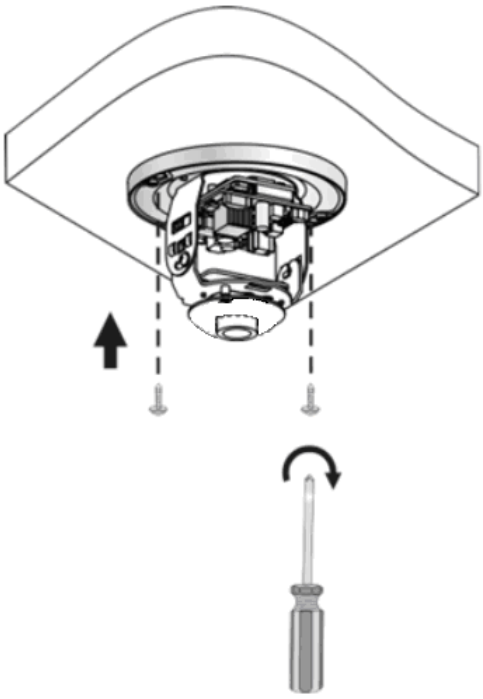

Figure 1-81

5. Adjust the monitoring direction and tighten the screws after vertically adjusting the lens.

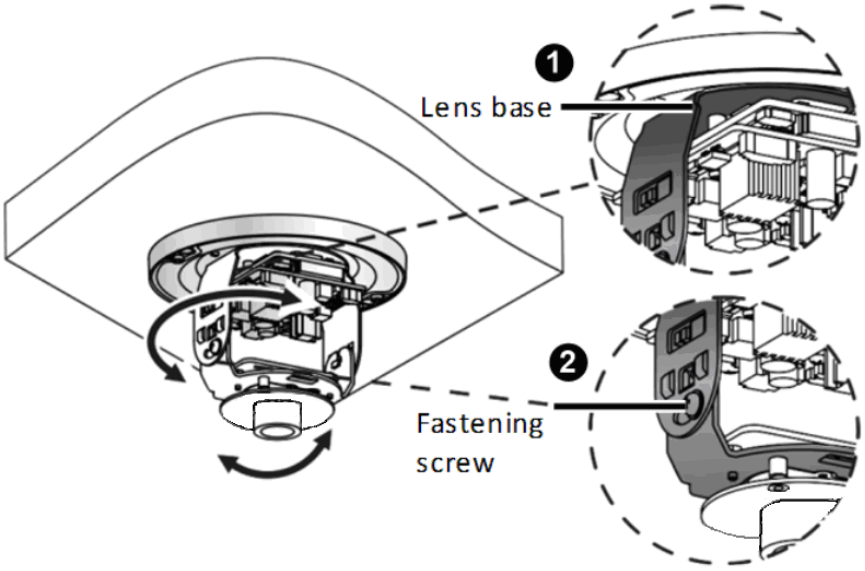

Figure 1-82

6. Secure the transparent dome cover with the supplied torx wrench.

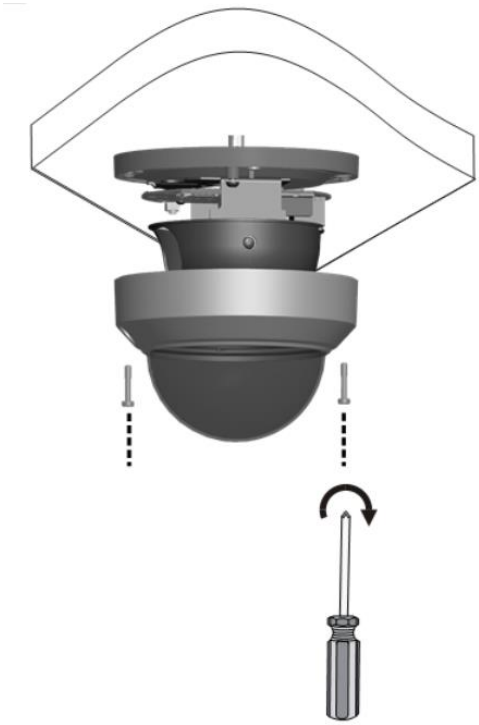

Figure 1-83

Note: Before securing the transparent dome cover, make sure the waterproof rubber strip is tightly held by the six retainers on the bottom ring.

Figure 1-84

For Open Installation

Lead the cables out from the open slot on the camera base before screwing the camera to the ceiling as shown in *Figure 1-82.*

1.3.5 Optional Installation

You can optionally purchase the following accessories to fit your mounting environment:

- **GV-Mount211P for Wall Mount**: see section 1.1.5.1.
- **GV-Mount213 for Wall / Ceiling Box Mount**: see section 1.3.5.1.
- **GV-Mount420 + GV-Mount211P for Pole Box Mount**: see section 1.1.5.3.
- **GV-Mount213 + Mount107 for Pendant Bracket Mount:** see section 1.1.5.4.
- **GV-Mount300-2 / 310-2 for Corner Mount:** see *Appendix F. GV-Mount300-2 / 310-2*.

For **GV-TDR2704-2F / TDR2704-4F / TDR2705 / TDR4704-2F / TDR4704-4F / TDR4803-2F / TDR8805**, you can optionally purchase:

- **GV-Mount924 for Gang Box Mount**: see section 1.3.5.2.

1.3.5.1 GV-Mount213

Figure 1-85

GV-Mount213 Packing List

• GV-Mount213	• Long Screw x 3
• Short Screw x 3	• Screw Anchor x 3

1. Attach the GV-Mount213 to the wall / ceiling and use a marker to mark the location for the center socket and the 3 screws.

Figure 1-86

Note: To prevent rain from getting into GV-ADR2701 / 2702 / 4701 / 4702 & TDR2702 / 2704 / 4702 / 4703 / 4704 / 4803 / 8805,

- For ceiling mount installation, turn the indicated hole inwards.
- For wall mount installation, make sure the indicated hole points down and towards the ground.

Figure 1-87

---

2. Drill 3 holes according to the screw locations. Then, drill a bigger hole at the center socket location for the Ethernet cable.

3. Insert 3 screw anchors to the screw locations and secure GV-Mount213 to the wall / ceiling with 3 long screws.
4. Thread the Ethernet cable through the center socket and waterproof the Ethernet cable. For details, *see 1.8 Waterproofing the Cable*.

Figure 1-88

5. Fit the cable into the GV-Mount213.
6. Remove the camera cover and fasten the camera to the wall box mount as indicated below using the supplied short screws.

GV-ADR2701 / 4701

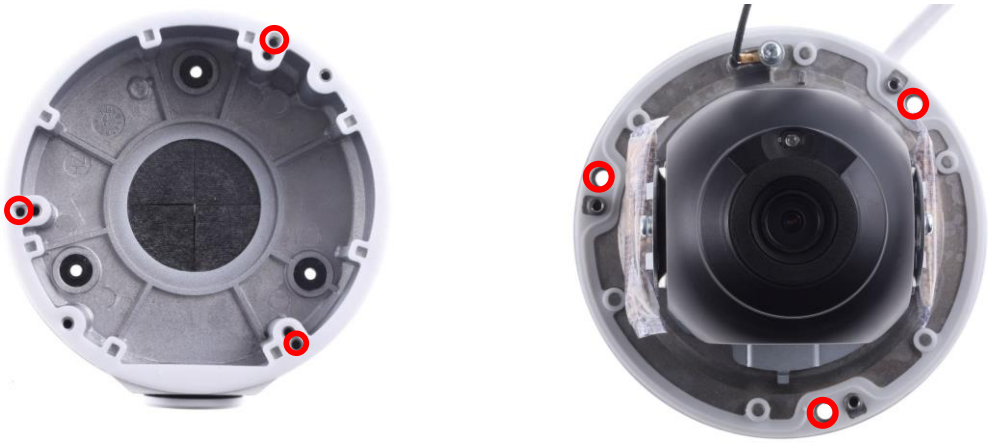

Figure 1-89

GV-ADR2702 / ADR4702 / TDR2700 / TDR2702 / TDR2704 / TDR4700 / TDR4702 / TDR4703 / TDR4704 / TDR4803 / TDR8805

Figure 1-90

7. Secure the camera cover.

Note: In addition to the Standard Installation, you can also choose to run the Ethernet cable through a corrugated tube. To do this, see *Figure 1-34* and its related Note.

1.3.5.2 GV-Mount924

GV-Mount924 Packing List

• GV-Mount924 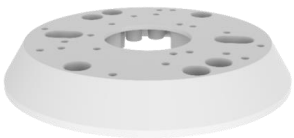	• M3 8 mm Screw x 4

1. Secure the gang box onto the back of GV-Mount924 using the holes indicated below.

Figure 1-91

US Double Gang Box

Figure 1-92

US Single Gang Box

2. Unscrew the transparent dome cover of the camera.
3. Thread the camera's cables through GV-Mount924 and secure the camera onto the holes indicated below using the supplied screws.

Figure 1-93

4. Secure the transparent dome cover onto the camera.

1.4 GV-AVD / TVD Series

The Vandal Proof IP Dome is an outdoor camera designed with IK10 vandal resistance and IP67 ingress protection. The camera is equipped with an automatic IR-cut filter and IR LEDs for day and night surveillance. Adjustable in 3 axes (pan, tilt and rotate), it offers an entry-level surveillance solution with all the essential features and excellent image quality.

Model No.		Description
GV-AVD2700	Varifocal lens	2MP, H.265, Low Lux, WDR
GV-AVD4710	Motorized varifocal lens	4 MP, H.265, Super Low Lux, WDR Pro
GV-AVD8710		8 MP, H.265, Super Low Lux, WDR Pro
GV-TVD2712	Motorized varifocal lens	2 MP, H.265, Super Low Lux, WDR Pro
GV-TVD4700	Varifocal lens	4 MP, H.265, Super Low Lux, WDR
GV-TVD4710	Motorized varifocal lens	4 MP, H.265, Super Low Lux, WDR Pro
GV-TVD4711		4 MP, H.265, Super Low Lux, WDR Pro
GV-TVD4810		4 MP, H.265, Super Low Lux, WDR Pro
GV-TVD4811		4 MP, H.265, Super Low Lux, WDR Pro
GV-TVD8710		8 MP, H.265, Super Low Lux, WDR Pro
GV-TVD8810		
Note: GV-Mount606 is not supported by GV-TVD4711.		

1.4.1 Packing List

1.4.1.1 GV-TVD4711 / TVD4811

- IR Vandal Proof IP Dome
- Screw Kit

- Drill Template Paster

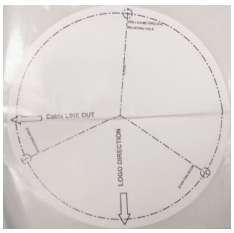

- Torx Wrench

- Spare Waterproof Rubber Plug

- Cable Protection Connector

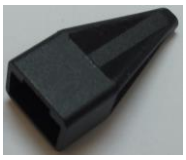

- 2-Pin Power Terminal Block

- Download Guide

1.4.1.2 GV-AVD / TVD Series

- IR Vandal Proof IP Dome
- Waterproof Rubber Set

- Screw Kit

- Drill Template Paster

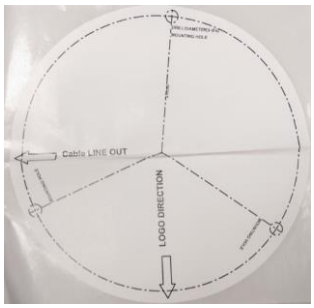

- Torx Wrench

- Download Guide

1.4.2 Optional Accessories

Optional accessories can expand the capabilities and versatility of your camera. Contact your dealer for more information. Accessory details can be found on the datasheet.

1.4.3 Overview

1.4.3.1 GV-AVD2700 / 4710 / 8710, GV-TVD4700 / 4710 / 4810 / 8710 / 8810

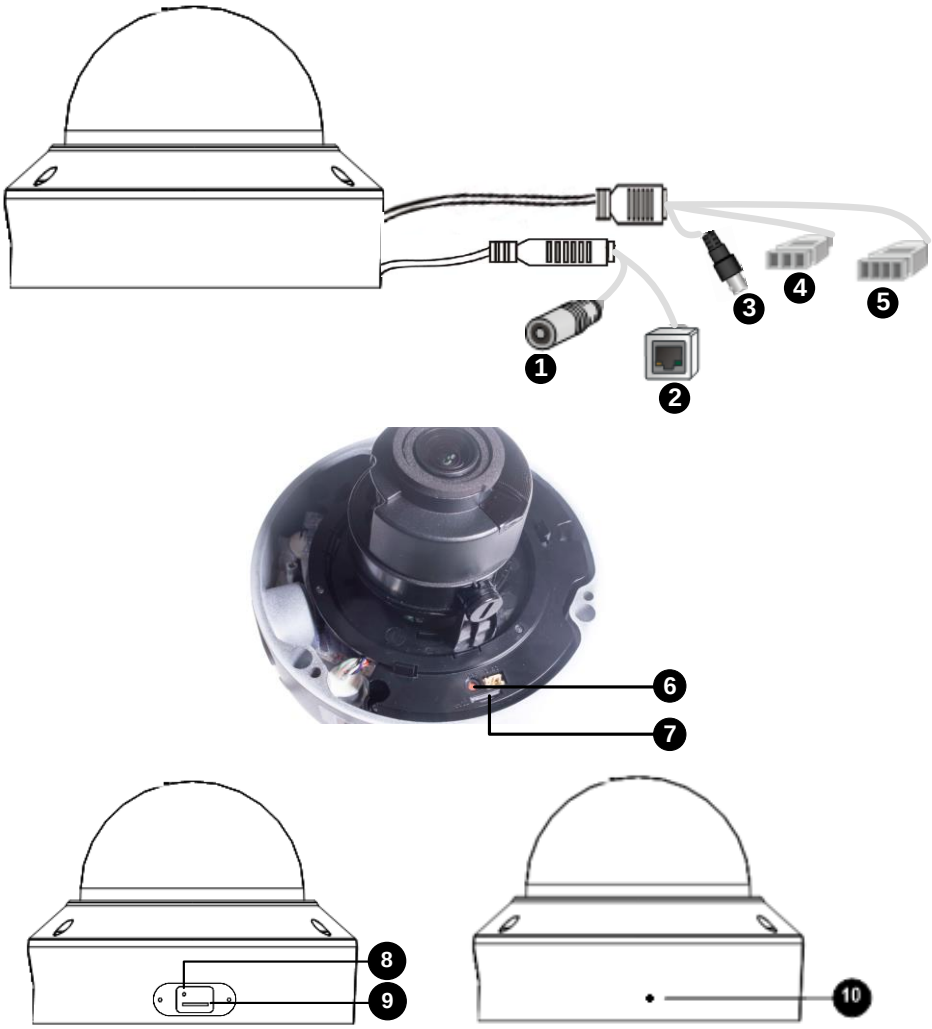

Figure 1-94

No.	Description	No.	Description
1	Power connector (DC 12 V)	6	Default button
2	Ethernet connector / PoE	7	Micro SD card slot
3	Video output (Not applicable to **GV-TVD4700 / 8810**)	8	Default button (For **GV-TVD4810 / 8810**)
4	Audio input / Audio output / GND (Not applicable to **GV-TVD4700**)	9	Micro SD card slot (For **GV-TVD8810**)
5	Alarm input (IN, GND) / Alarm output (N, P) (Not applicable to **GV-TVD4700**)	10	Built-in microphone (For **GV-TVD4810 / 8810**)

Note: If the default button doesn't respond after pressing for 15 seconds, reboot the camera and try again within 10 minutes of rebooting.

1.4.3.2 GV-TVD4711 / TVD4811

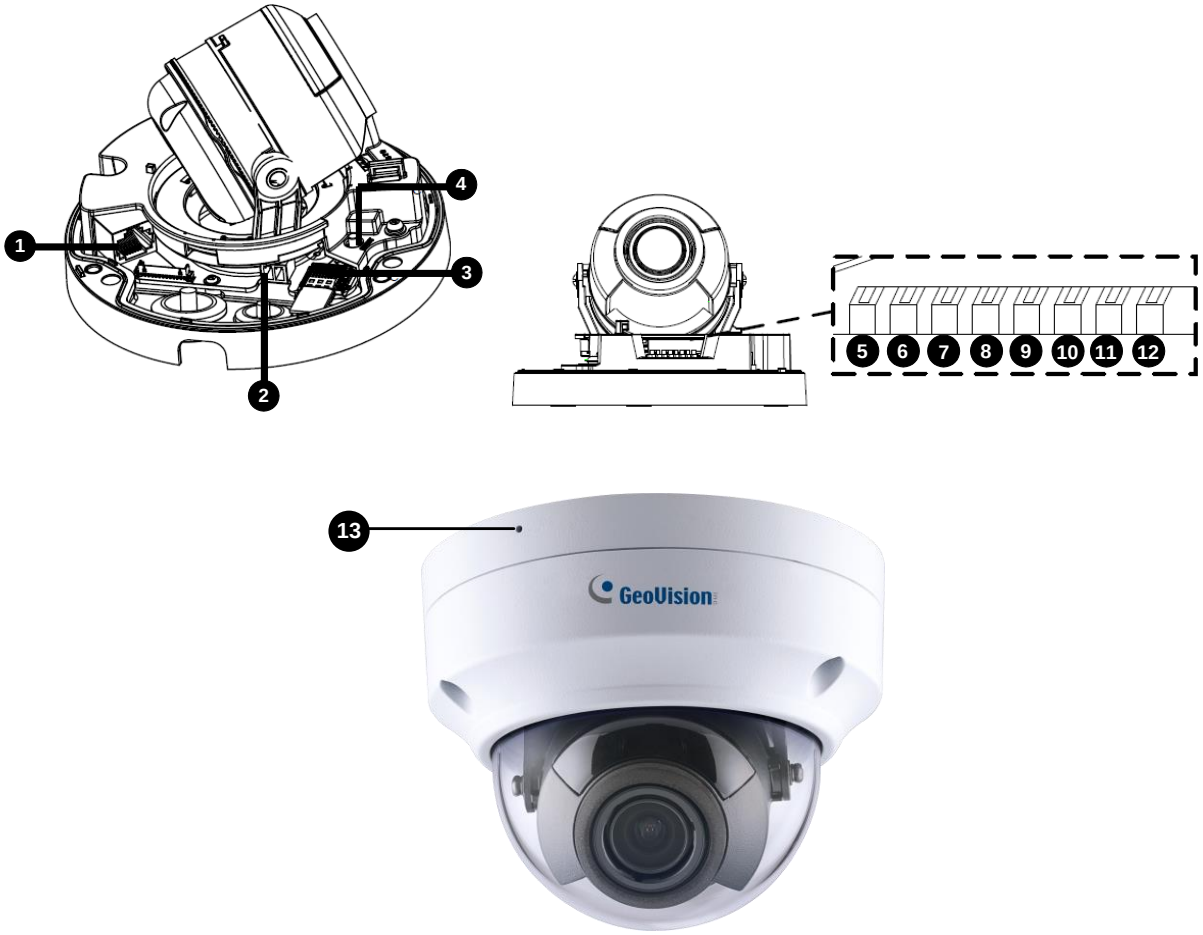

Figure 1-95

No.	Description	No.	Description
1	Ethernet port	8	Digital Input
2	Power port (2-Pin terminal block)	9	GND
3	Micro SD card slot	10	Audio In
4	Default button	11	GND
5	Digital Output (N)	12	Audio Out
6	Digital Output (P)	13	Microphone (**GV-TVD4811** only)
7	GND		

Note: There are two ways to supply power to the camera:

- Use a Power over Ethernet (PoE) adapter to connect the camera to the network, and the power will be provided at the same time.
- Plug the power adapter to the supplied 2-pin terminal block by inserting the striped wire to the right pin (-) and the black wire to the left pin (+), then insert the 2-pin terminal block to *Power Connector, No. 2* in *Figure 1-95*.

Figure 1-96

1.4.3.3 GV-TVD2712

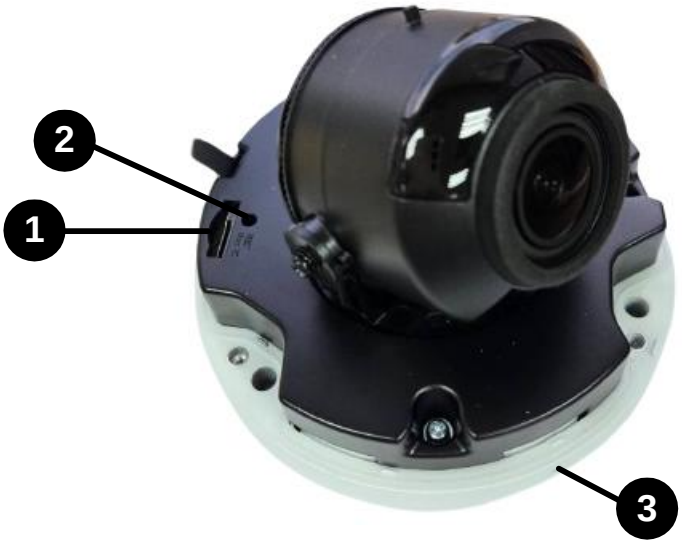

No.	Description	No.	Description
1	Micro SD card slot	3	Built-in microphone
2	Default button		

1.4.4 Installation

The Target Vandal Proof Dome is designed for outdoors. With the standard package, you can install the camera on the ceiling. Alternatively, you can purchase optional mounting accessories to mount the camera on a wall.

Below are the instructions for **Ceiling Mount**. There are two kinds of Ceiling Mount: **Concealed Installation** and **Open Installation**. In Concealed Installation, the cables are hidden in the ceiling. In Open Installation, the cables are led out from the open slot on the camera base.

1.4.4.1 GV-AVD2700 / 4710 / 8710, GV-TVD4700 / 4710 / 4810 / 8710 / 8810

For Concealed Installation

1. Stick the drill template paster to the ceiling, and then drill three holes according to the drill template.

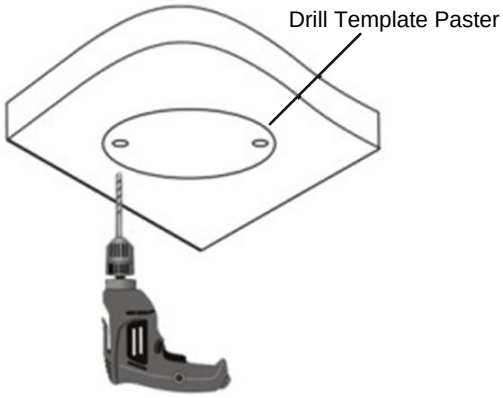

Figure 1-97

2. Insert the screw anchors.

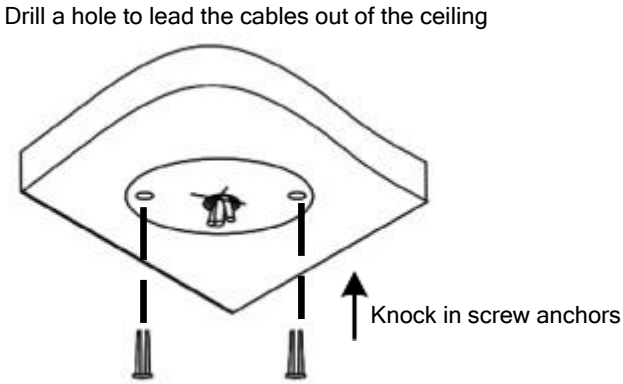

Figure 1-98

3. Unscrew the transparent dome cover with the supplied torx wrench.

4. Connect the camera cables and secure the camera.

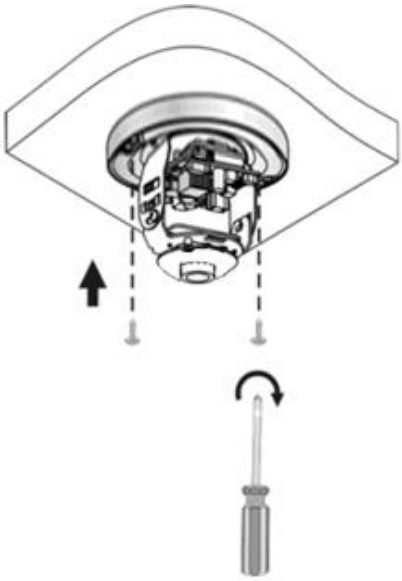

Figure 1-99

5. Insert a SD card into the slot.
6. Adjust the monitoring direction and tighten the screws after vertically adjusting the lens.

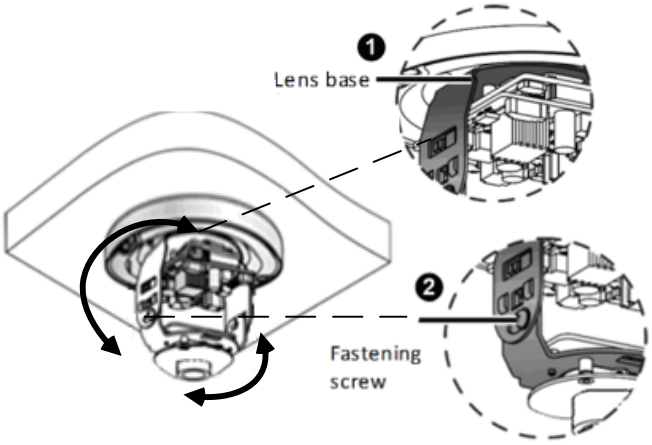

Figure 1-100

7. Secure the transparent dome cover with the supplied torx wrench.

For Open Installation

Lead the cables out from the open slot on the camera base before screwing the camera to the ceiling as shown in *Figure 1-99*.

1.4.4.2 GV-TVD4711 / TVD4811

1. Follow steps 1 to 3 in *1.4.4.1 GV-AVD2700 / 4710 / 8710, GV-TVD4700 / 4710 / 4810 / 8710 / 8810*.

To install an Ethernet / PoE cable:

2. Remove the large waterproof rubber plug from the base of the camera.
3. Cut a small opening on the tip of the large waterproof rubber plug.
4. Attach the cable protection connector to the Ethernet cable head and push the Ethernet cable through the opening.
5. Remove the cable protection connector. Thread the Ethernet cable through the large hole to connect to the camera and press to embed the waterproof rubber plug.

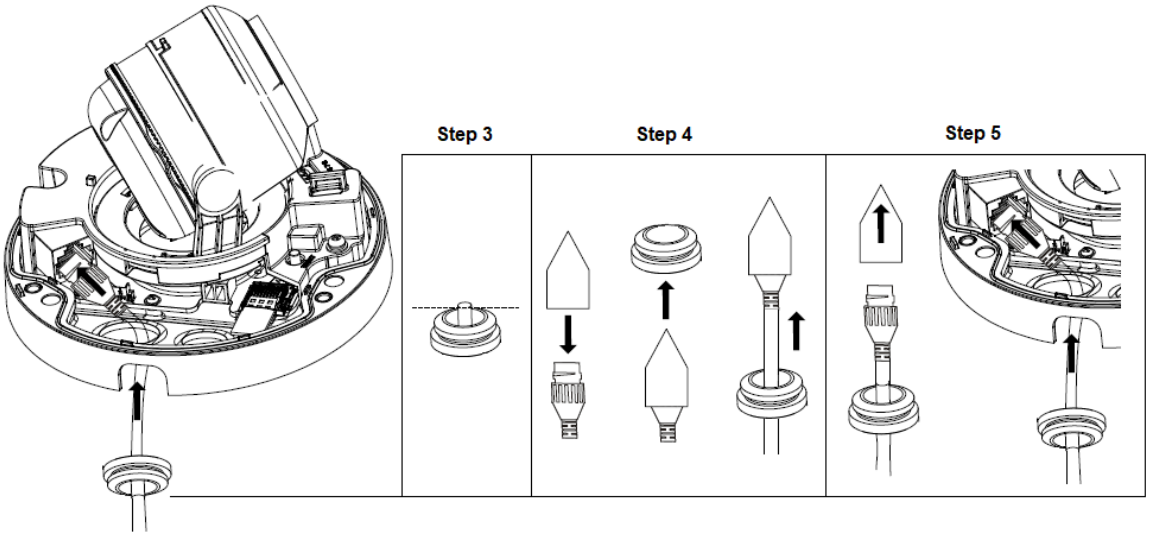

Figure 1-101

To install optional power and I/O wires:

6. Repeat steps 2 to 3 for the small waterproof rubber plug at the base of the camera.
7. Push the power and I/O wires through the opening on the small waterproof plug.
8. Thread the wires through the small hole and press to embed the waterproof rubber plug.
9. Attach the supplied 2-pin terminal block to the power wires.

10. Connect the 2-pin terminal block and I/O wires to the camera.

Tip: When connecting the I/O wires to the camera, thread the I/O wires through the protruded loop.

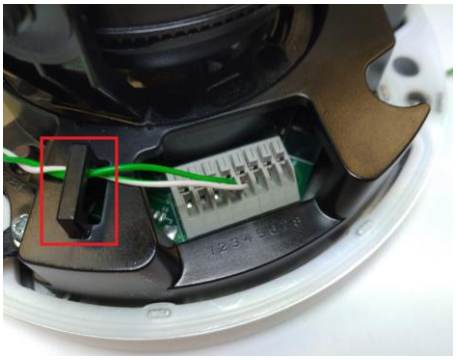

Figure 1-102

To finish the installation:

11. Secure the camera and insert a micro SD card to the slot.
12. Secure the transparent dome cover with the supplied torx wrench.

1.4.5 Optional Installation

You can optionally purchase the following accessories to fit your mounting environment:

- **GV-Mount211P / GV-Mount212P for Wall Box Mount:** see section 1.1.5.1 and 1.1.5.2.
- **GV-Mount420 + GV-Mount211P for Pole Box Mount:** see section 1.1.5.3.
- **GV-Mount212P / GV-Mount212-2 + GV-Mount107 for Pendant Tube Mount:** see section 1.1.5.4.
- **GV-Mount211-2 for Wall Mount**: see section 1.4.5.1.
- **GV-Mount212-2 for Wall / Ceiling Box Mount**: see section 1.4.5.2.
- **GV-Mount420 + GV-Mount211-2 for Pole Box Mount**: see section 1.4.5.3.
- **GV-Mount606 for In-Ceiling Bracket Mount**: see section 1.4.5.4.
- **GV-Mount300-2 / 310-2 for Corner Mount:** see *Appendix F. GV-Mount300-2 / 310-2*.

Note: For detailed instructions on GV-TVD2712, see *GV-A/T/EBD Series IP Camera Mount Installation Guide*.

1.4.5.1 GV-Mount211-2

Figure 1-103

GV-Mount211-2 Packing List

• GV-Mount211-2	• Long Screw x 5
• Short Screw x 4	• Screw Anchor x 5
• Plastic PG21 Conduit Connector	• Drill Template Paster

1. To install the power box from the wall mount bracket on the wall, follow steps 1 to 5 in *1.1.5.1 GV-Mount211P*.

2. Unscrew the transparent dome cover with the supplied torx wrench.

Figure 1-104

3. Optionally insert a SD card into the slot.
4. Thread the camera cables through the bracket.
5. Secure the camera to the wall mount bracket with the provided short screws.

Figure 1-105

6. Thread the Ethernet cable through the PG21 conduit connector and the power box, as shown in No 6, *Figure 1-106* below. Then connect the cable to the camera.
7. Rotate the plastic ring to secure the conduit connector to the power box. Screw in the cap shown in No 7, *Figure 1-106* below.
8. Screw the wall mount bracket to the power box, as shown in No. 8 below.

Figure 1-106

1.4.5.2 GV-Mount212-2

Figure 1-107

GV-Mount212-2 Packing List

• GV-Mount212-2	• Long Screw x 3
• Short Screw x 3	• Screw Anchor x 3

1. Attach the ceiling box to the ceiling and use a marker to mark the location for the center socket and the screws. Make sure the knob points inwards.

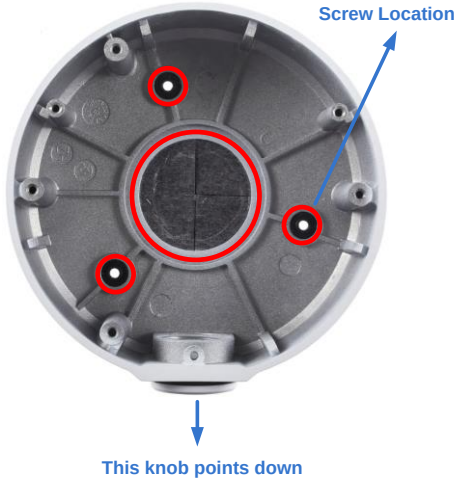

Figure 1-108

2. Drill 3 holes according to the screw location. Then, drill a bigger hole at the center socket location for the Ethernet cable.
3. Insert 3 screw anchors to the screw location and secure the ceiling box to the ceiling with 3 long screws.
4. Thread the Ethernet cable through the center socket, connect other wires and fit the camera cable into the ceiling box. See *1.8 Waterproofing the Cable*.

Figure 1-109

5. Unscrew the transparent dome cover with the supplied torx wrench.

6. Secure the camera to the ceiling box.

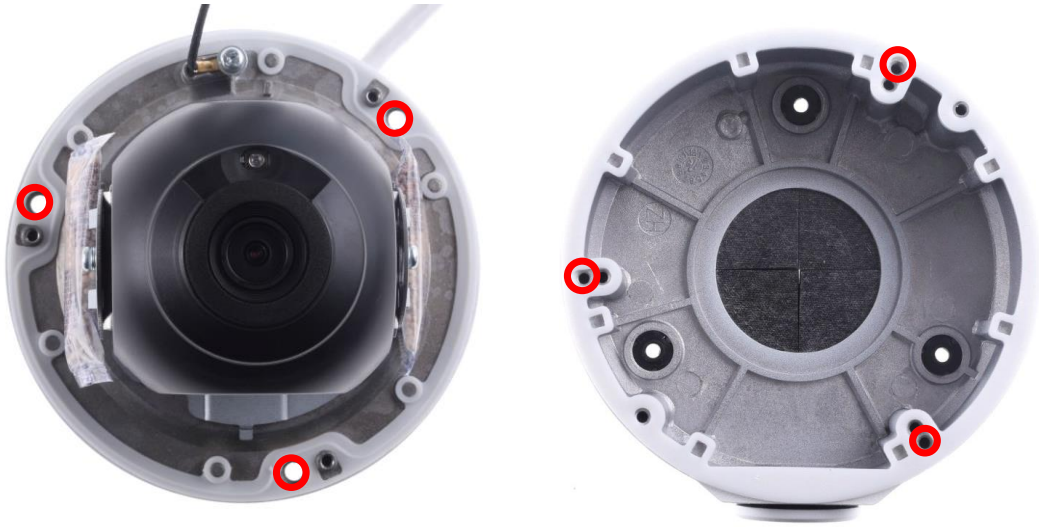

Figure 1-110

Note: In addition to the Standard Installation, you can also choose to run the Ethernet cable through a corrugated tube. To do this, see Figure 1-34 and its related Note.

1.4.5.3 GV-Mount420 + GV-Mount211-2

Figure 1-111

GV-Mount420 Packing List

• GV-Mount420	• M4 Screw x 4
• Additional Screw Kit - M6 Screw x 4 - M6 Nut x 4 - M6 Plain Washer x 4 - M6 Split Washer x 4	

Note: For **GV-AVD Series**, GV-Mount420 can only be used in conjunction with GV-Mount211-2.

1. Follow *Step 1 ~ 4* in *1.1.5.3 GV-Mount420 + GV-Mount211P*.
2. Follow *Step 2 ~ 8* in *1.4.5.1 GV-Mount211-2*.
3. Secure the camera onto the desired pole by tightening the steel straps.

1.4.5.4 GV-Mount606

Figure 1-112

GV-Mount606 Packing List

• In-Ceiling Mount Bracket 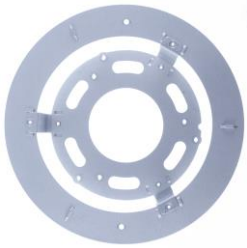	• In-Ceiling Cover
• In-Ceiling Plate	• Drill Template Paster
• Screw Kit: - M4 Screw (8 mm) x 3 - M4 Screw (40 mm) x 2	

1. Paste the drill template to the ceiling and drill the ceiling to the size of the drill template.
2. Place the In-Ceiling Plate behind the ceiling with the flat side facing down.
3. Loosen the knob on the side of the camera and thread the camera wires through.
4. Thread the camera wires through the side of the In-Ceiling Mount Bracket and place the camera in the Mount Bracket.

Figure 1-113

5. Open the transparent dome cover and insert the 3 M4 Screws (8 mm).
6. Align and secure the camera to the Mount Bracket with 3 M4 Screws (8 mm).

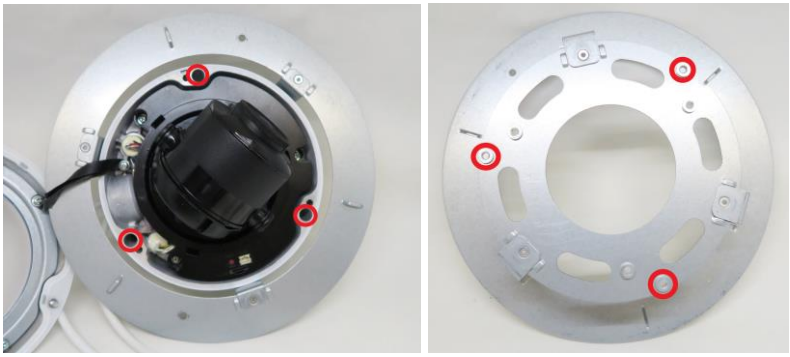

Figure 1-114

7. Connect the camera wires to the necessary wires.
8. Secure the housing cover, flip and hold the camera upside down against the ceiling.
9. Align and secure the Mount Bracket to the In-Ceiling Plate with 2 M4 Screws (40 mm).

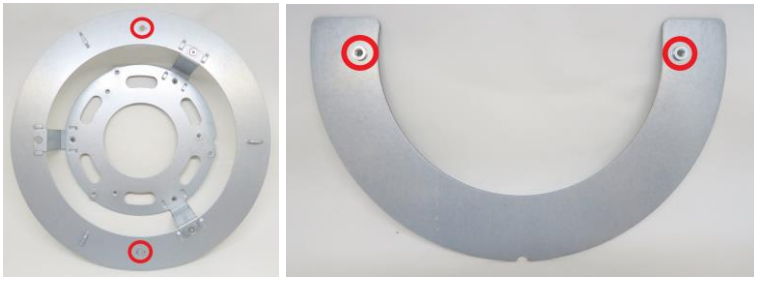

Figure 1-115

10. Put on the In-Ceiling Cover to finish installation.

1.5 GV-TFD Series

The IR Mini Fixed IP Dome is an indoor, fixed, network camera equipped with an automatic IR-cut filter and an IR LED for day and night surveillance. The camera supports H.265 video codec to achieve better compression ratio while maintaining high quality image at reduced network bandwidths.

Model No.		Description
GV-TFD4700	Fixed lens	4 MP, H.265, Super Low Lux, WDR Pro
GV-TFD4800	Fixed lens	4 MP, H.265, Super Low Lux, WDR Pro

1.5.1 Packing List

- IR Mini Fixed IP Dome
- Screw Kit

- 2-Pin Power Terminal Block (only for GV-TFD4700)

- Torx Wrench

- Drill Template Paster
- Download Guide

1.5.2 Optional Accessories

Optional accessories can expand the capabilities and versatility of your camera. Accessory details can be found on the datasheet.

1.5.3 Overview

1.5.3.1 GV-TFD4700 / 4800

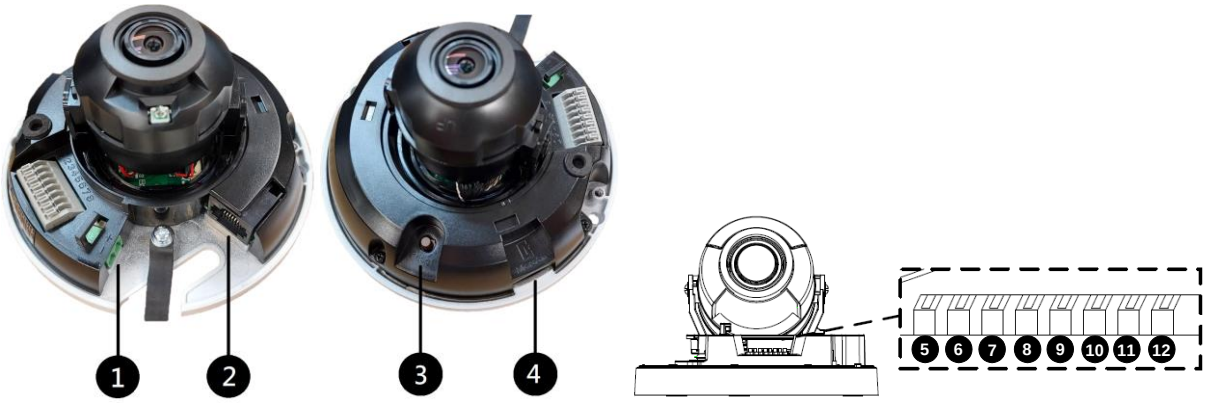

Figure 1-116

No.	Description	No.	Description
1	Power port (2-Pin terminal block)	7	Audio In
2	Ethernet port	8	GND
3	Default button	9	Alarm Input
4	Micro SD card slot	10	GND
5	Audio Out	11	Alarm Output P
6	GND	12	Alarm Output N

Note: There are two ways to supply power to the camera:

- Use a Power over Ethernet (PoE) adapter to connect the camera to the network, and the power will be provided at the same time.
- Plug the power adapter to the supplied 2-pin terminal block by inserting the striped wire to the right pin (-) and the black wire to the left pin (+), and then insert the 2-pin terminal block to *Power Connector, No. 1*.

1.5.4 Installation

The IR Mini Fixed IP Dome is designed for indoors. With the standard package, you can install the camera on the ceiling.

Below are the instructions for **Ceiling Mount**. There are two kinds of Ceiling Mount: **Concealed Installation** and **Open Installation**. In Concealed Installation, the cables are hidden in the ceiling. In Open Installation, the cables are led out from the open slot on the camera base.

1.5.4.1 GV-TFD4700 / 4800

For Concealed Installation

1. Follow steps 1 to 3 in *1.3.4 Installation*.
2. Insert a micro SD card.
3. Connect the Ethernet cable, I/O wires, and power terminal block to the camera through the opening on the camera base, and secure the camera to the ceiling.

Tip: When connecting the I/O wires to the camera, thread the I/O wires through the protruded loop as shown in *Figure 1-102*.

4. Loosen the fastening screws and rotate the lens vertically toward the camera base on the side with the “UP” indicator.

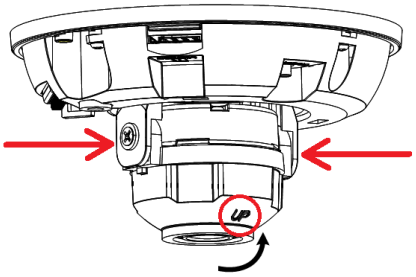

Figure 1-117

Figure 1-118

Note: Make sure to adjust the lens as stated in Step 4 for any type of installation, in order for the lens to rotate smoothly upon powering up. For installation on the wall, also make sure the “UP” indicator is facing up towards the ceiling.

5. Secure the transparent dome cover with the supplied torx wrench.

For Open Installation

Lead the cables out from the opening on the camera base before screwing the camera to the ceiling in Step 3.

1.5.5 Optional Installation

For optional installations, refer to the following sections:

- **GV-Mount213 for Wall / Ceiling Box Mount:** see section 1.3.5.1.

1.6 GV-FER5702

The IR Fisheye Rugged IP Camera is an outdoor, fixed, network camera equipped with an automatic IR-cut filter and an IR LED for day and night surveillance. The camera supports H.265 video codec to achieve better compression ratio while maintaining high quality image at reduced network bandwidths. The camera adheres to IP66 standards for dust / water protection and IK10 for metal casing and can be powered through PoE. With its WDR Pro, it can process scenes with contrasting intensity of lights and produce clear image. It is also equipped with a built-in micro SD card slot for local storage.

Model No.		Description
GV-FER5702	Fixed lens	5 MP, H.265, Super Low Lux, WDR Pro

1.6.1 Packing List

- IR Fisheye Rugged IP Camera (GV-FER5702)

- Drill Template Paster

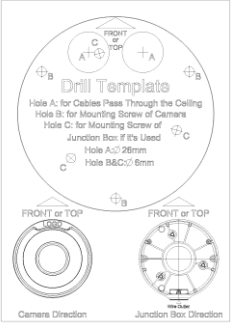

- Waterproof Rubber Set

- Download Guide

- Screw Kit

1.6.2 Optional Accessories

Optional accessories can expand the capabilities and versatility of your camera. Accessory details can be found on the datasheet.

1.6.3 Overview

1.6.3.1 GV-FER5702

Figure 1-119

No.	Description	No.	Description
1	Power connector (DC 12V)	3	Green wire-Alarm output -
2	Ethernet connector / PoE	4	Yellow wire-Audio output
3	Brown wire-Alarm input	4	White wire-GND
3	Blue wire-GND	4	Purple wire-Audio input
3	Orange wire-Alarm output +		

Load Default Button

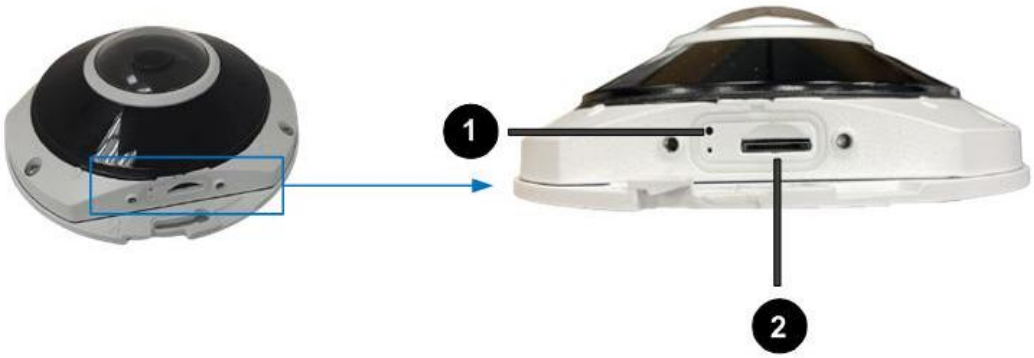

Figure 1-120

No.	Description	No.	Description
1	Load default button	2	SD card slot

Note: If the default button doesn't respond after pressing for 15 seconds, reboot the camera and try again within 10 minutes of rebooting.

1.6.4 Installation

The IR Fisheye Rugged IP Camera is designed for outdoors. With the standard package, you can install the camera on the wall or ceiling. Or, you can purchase optional mounting accessories to mount your camera on a wall.

Below are the instructions for **Ceiling Mount**.

1. Stick the drill template paster to the ceiling and drill holes on the ceiling according to the drill template.

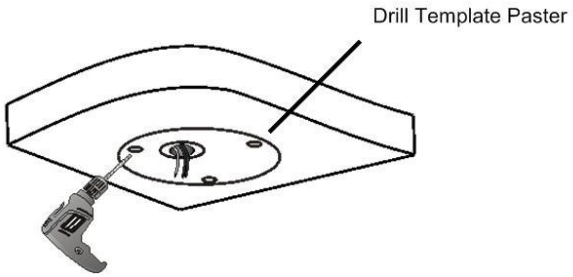

Figure 1-121

2. Insert the screw anchors.

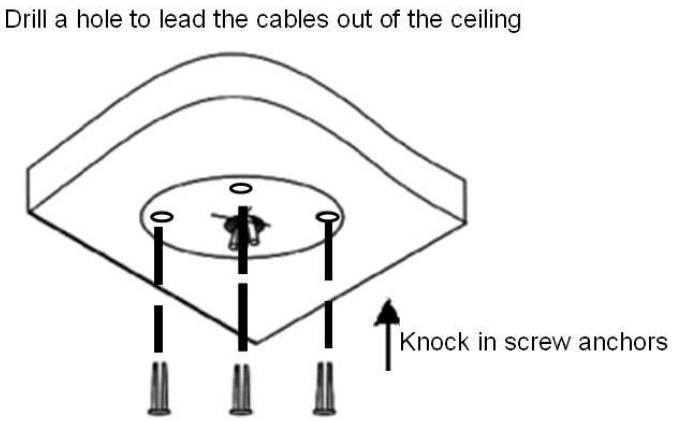

Figure 1-122

3. Remove the housing by turning it anticlockwise.

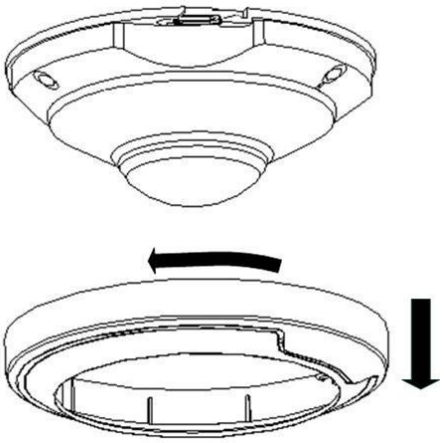

Figure 1-123

4. Secure the camera base onto the ceiling with 3 screws supplied and lock up the housing by turning it clockwise.

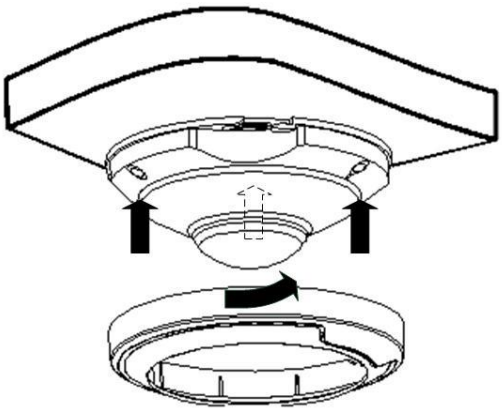

Figure 1-124

1.6.5 Optional Installation

You can optionally purchase the following accessories to fit your mounting environment:

- **GV-Mount212P for Wall Box Mount**: see similar installation procedures in section 1.1.5.2.
- **GV-Mount107 + GV-Mount212P for Pendant Tube Mount**: see similar installation procedures in section 1.1.5.4.

1.7 GV-PTZ5810-IR

GV-PTZ5810-IR is an indoor network PTZ camera that offers 5x optical zoom, capable of showing smooth live view with great details. This camera can simultaneously deliver three video streams in resolutions up to 2880 x 1620 at 30 fps. In low-light environments, night vision is enhanced with its LEDs, which allow up to 30 m (100 ft) effective IR distance. The camera can process scenes with contrasting intensity of lights and produce clear image using the built-in WDR Pro. GV-PTZ5810-IR supports H.265 video codec to achieve better compression ratio while maintaining high quality pictures at reduced network bandwidths.

Model No.		Description
GV-PTZ5810-IR	Motorized lens	5 MP, H.265, Super Low Lux, WDR Pro

1.7.1 Packing List

- IR Mini PTZ IP Camera (GV-PTZ5810-IR)

- Drill Template Paster
- Screw Kit

- Download Guide

1.7.2 Optional Accessories

Optional accessories can expand the capabilities and versatility of your camera. Accessory details can be found on the datasheet.

1.7.3 Overview

1.7.3.1 GV-PTZ5810-IR

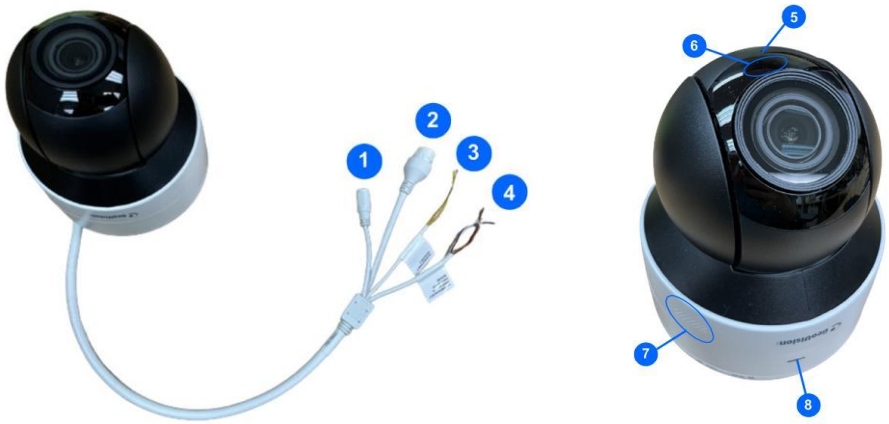

Figure 1-125

No.	Description	No.	Description
1	Power connector (DC 12V)	4	Orange / white wire-Alarm output_P
2	Ethernet connector / PoE	4	Orange wire-Alarm output_N
3	Yellow / black wire-RS485_A	5	Built-in microphone
3	Yellow wire-RS485_B	6	IR LED
4	Purple wire-Alarm input	7	Built-in speaker
4	Black wire-GND	8	Ready LED

Load Default Button

Figure 1-126

No.	Description	No.	Description
1	Load default button	2	SD card slot

Note: If the default button doesn't respond after pressing for 15 seconds, reboot the camera and try again within 10 minutes of rebooting.

1.7.4 Installation

The IR IP Mini PTZ Camera is designed for indoors. With the standard package, you can install the camera on the wall or ceiling. Or, you can purchase optional mounting accessories to mount your camera on a wall.

Below are the instructions for **Ceiling Mount**.

1. Hold the camera and rotate the adapter plate counterclockwise to detach it from the camera.

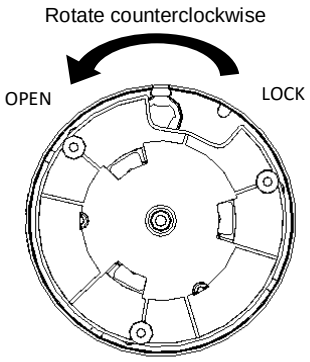

Figure 1-127

2. Stick the drill template paster to the ceiling and drill holes on the ceiling according to the drill template.

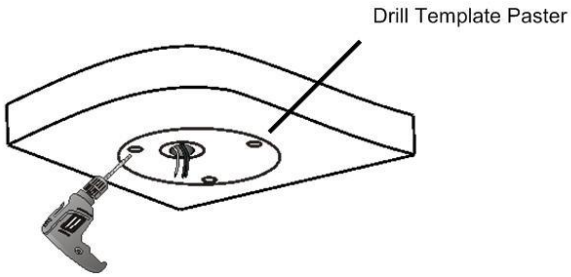

Figure 1-128

3. Fix the adapter plate to the ceiling with screws.

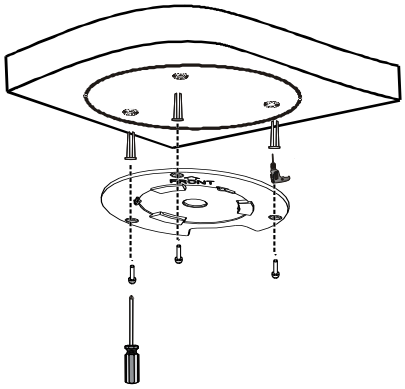

Figure 1-129

4. Secure the camera to the adpater plate and rotate the camera counterclockwise until it's fastened.

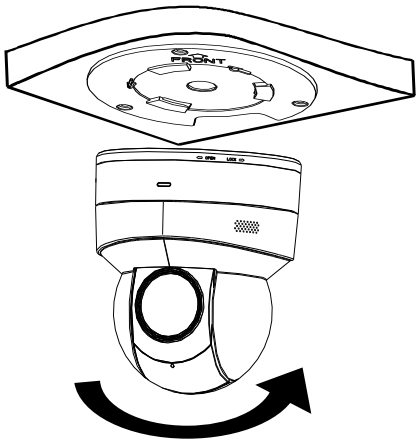

Figure 1-130

1.7.5 Optional Installation

You can optionally purchase the following accessories to fit your mounting environment:

- **GV-Mount107 + GV-Mount212P for Pendant Tube Mount**: see similar installation procedures in section 1.1.5.4.
- **GV-Mount211P / GV-Mount212P for Wall Box Mount:** see section 1.1.5.1 and 1.1.5.2.
- **GV-Mount300-2 / 310-2 for Corner Mount:** see *Appendix F. GV-Mount300-2 / 310-2*.
- **GV-Mount420 + GV-Mount211P for Pole Box Mount:** see section 1.1.5.3.

1.8 GV-TMS8800

GV-TMS8800 features two 4MP CMOS image sensors to deliver a video resolution of 2688 x 1520 at up to 25 fps. It's an outdoor, fixed, network camera equipped with an automatic IR-cut filter and two IR LEDs for day and night surveillance. The camera supports H.265 video codec to achieve better compression ratio while maintaining high quality pictures at reduced network bandwidths. The camera adheres to IP67 and IK10 standards, and can be powered through PoE.

Model No.		Description
GV-TMS8800	Fixed lens	4 MP x 2, H.265, Super Low Lux, WDR Pro

1.8.1 Packing List

- Multi-Lens IR Fixed IP Dome Camera (GV-TMS8800)

- Drill Template Paster
- Screw Kit

- Waterproof Rubber Set

- Torx Wrench

- Download Guide

1.8.2 Optional Accessories

Optional accessories can expand the capabilities and versatility of your camera. Accessory details can be found on the datasheet.

1.8.3 Overview

1.8.3.1 GV-TMS8800

Figure 1-131

No.	Description	No.	Description
1	Alarm input / output	5	Built-in microphone x 2 (on both sides)
2	Ethernet connector / PoE	6	IR LED x 2
3	Power connector (DC 12V)	7	Micro SD card slot
4	Audio input / output	8	Default button

Note: If the default button doesn't respond after pressing for 15 seconds, reboot the camera and try again within 10 minutes of rebooting.

1.8.4 Installation

See *8.3 Installation* in the *Quick Start Guide* for details.

1.8.5 Optional Installation

You can optionally purchase the GV-Mount accessories to fit your mounting environment:

For details, please see *GV-A/T/EBD Series IPCamera Mount Installation Guide*.

1.9 System Requirements

CPU	Intel Core i5-4670, 3.40 GHz
Memory	DDR3 8 GB RAM
On Board Graphics	Intel HD Graphics 4600 (Versions of driver from year 2014 or later required)
Web Browsers	● Internet Explorer 11.0 or later ● Google Chrome ● Microsoft Edge ● Mozilla Firefox ● Safari

Note:

1. Some functions are not available on non-IE browsers, e.g., Local Parameters (see *3.1.2 Local Parameters*) and Photo (see *3.8.3 Backing Up Storage*) are not supported by Google Chrome.
2. Non-IE browsers supporting complete functions include Google Chrome 45.0 or later, Microsoft Edge 52.0 or later, and Mozilla Firefox 79 or later.
3. The following models support complete functions on non-IE browsers: GV-BLFC5800, GV-EBD2705 / 4704 / 4813 / 8800 / 8813, GV-EBDP5800, GV-EBFC5800, GV-FER5702 (V1.06 or later), GV-TBL2706 / 4705 / 4807 / 4810 / 8804 / 8810, GV-TBLP5800, GV-TDR2705 / 4704 / 4803 / 8805, GV-TFD4800, GV-TMS8800, GV-TVD4810 (V1.05 or later) / 4811 / 8810, GV-PTZ5810-IR (V1.02 or later).
4. Live view is not supported on Safari for the following models: GV-BLFC5800, GV-EBD4704 / 4813 / 8800 /8813, GV-EBDP5800 / 8800, GV-EBFC5800, GV-FER5702, GVPTZ5810-IR, GV-TBL2705 / 2718 / 4705 / 4807 / 4810 / 8804 / 8810, GV-TBLP5800 / 8800, GV-TDR2704-2F / 4704-2F / 4704-4F / 4803-2F / 8805, GV-TFD4800, GV-TVD2712 / 4810 / 4811 / 8810.

1.10 Waterproofing the Cable

Waterproof the Ethernet cable by using the supplied waterproof rubber set.

1. Attach the seal ring to the RJ-45 plug.

Figure 1-132

2. Insert the waterproof components through the Ethernet cable as shown below.

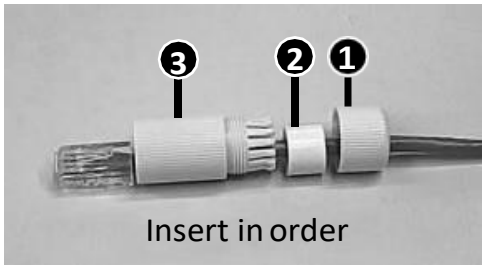

Figure 1-133

3. Insert the cylindrical waterproof ring into waterproof bolt.

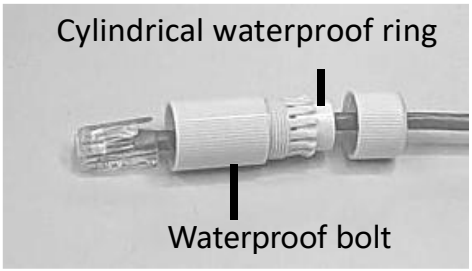

Figure 1-134

4. Insert the cable into the RJ-45 plug and screw the waterproof bolt in.

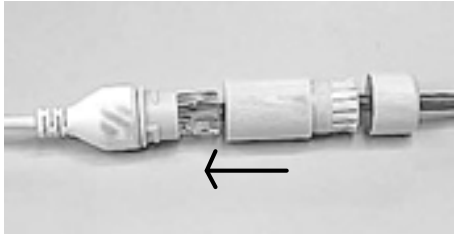

Figure 1-135

5. Screw in the waterproof bolt lid.

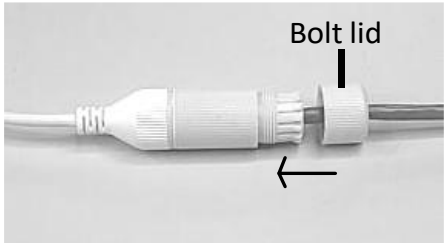

Figure 1-136

6. Finish the waterproof installation.

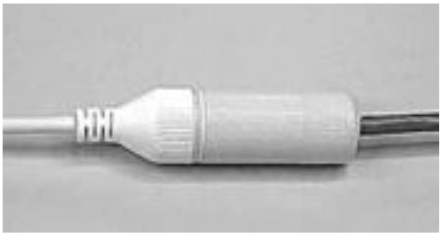

Figure 1-137

7. If the camera has a DC cable and is not in use, you can waterproof it by inserting the supplied plug into the DC interface.

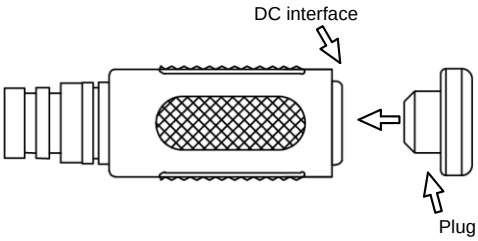

Figure 1-138

IMPORTANT: After installing the camera, it is required to use waterproof tapes to cover and protect any of the tail cables and connection points that are exposed, see *Note for Installing Camera Outdoor* at the beginning of the manual.

Chapter 2 Accessing the Camera

Once installed, the IP camera is accessible on a network. Follow these steps to configure the network settings and access your surveillance images.

2.1 Installing on a Network

These instructions describe the basic connections to install the camera on the network.

1. Using a standard network cable, connect the camera to your network.
2. Connect to power using one of the following methods:
   - Use the optional power adapter to connect to power.
   - Use the Power over Ethernet (PoE) function in which power is supplied over the network cable.
3. You can now access the Web interface of the camera.
   - If the camera is installed in a LAN with DHCP server, use GV-IP Device Utility to look up the camera's dynamic IP address. See *2.1.1 Looking up the Dynamic IP Address and Logging In*.
   - If the camera is installed in a LAN without DHCP server, the default IP address **192.168.0.10** is applied. To assign a different static IP address, see *2.1.2 Configuring the IP Address*.

Note: You must set your browser to allow ActiveX Control and perform a one-time installation of the ActiveX component onto your computer upon your first login.

2.1.1 Looking Up the Dynamic IP Address and Logging In

By default, when the device is connected to LAN with a DHCP server, it is automatically assigned with a dynamic IP address. Follow the steps below to look up its IP address and log in the Web interface.

1. Download and install **GV-IP Device Utility** from the company website.

Note:

1. The PC installed with GV-IP Device Utility must be under the same LAN as the camera you wish to configure.
2. By default, the Administrator's username is **admin** and cannot be modified.

---

2. On the GV-IP Device Utility window, click the button to search for the IP devices connected in the same LAN. Click the **Name** or **Mac Address** column to sort.
3. Find the camera with its Mac Address, click on its IP address.

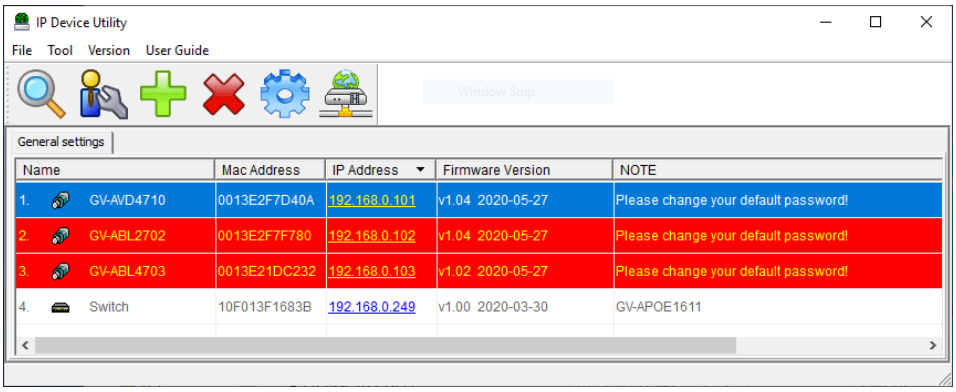

Figure 2-1

4. For the first-time users, you will be requested to set up a password.
5. Type a new password and click **OK**.
6. Type your username and password on the login page and click **Login**.

2.1.2 Configuring the IP Address

By default, when the device is connected to LAN without a DHCP server, it is assigned with a static IP address of **192.168.0.10**. Follow the steps below to assign a new IP address to avoid IP conflict with other GeoVision devices.

1. Open your Web browser and type the default IP address **192.168.0.10**.
2. Type your username and password. Click **Login**.
3. Click **Setup**, select **Common** in the left menu and select **Network**.

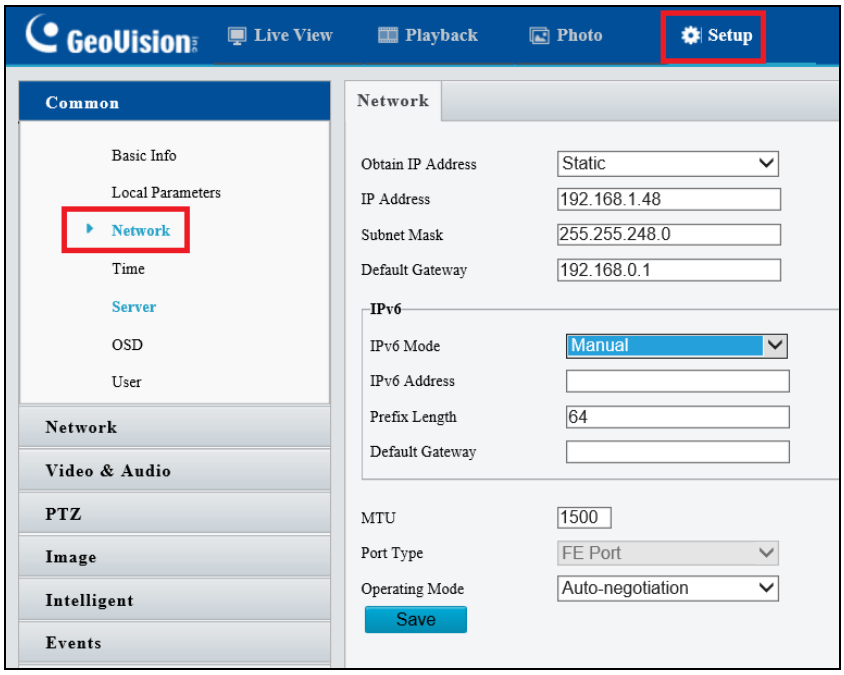

Figure 2-2

4. Select **Static IP** from the **Obtain IP Address** drop-down list.
5. Enter the IP address, subnet mask, and default gateway address. Make sure that the IP address of the camera is unique in the network.
6. Click **Save**.

Note: When you change the network segment through the Web interface or GV-IP Device Utility, you must also change the default gateway for the change to take effect.

2.2 Accessing Live View

After logging into the camera, you will see the Home page as shown below:

GV-TMS8800

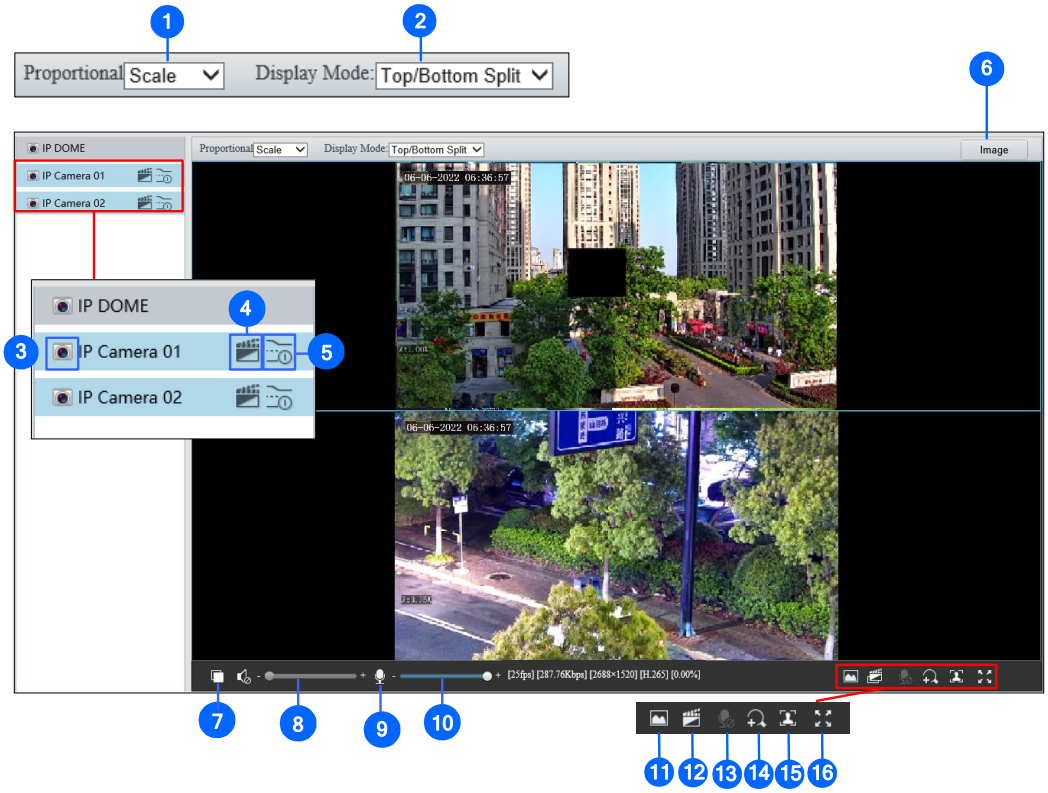

Figure 2-3

No.	Name	Function
1.	Proportional	Set the display ratio of the image. ■ **Scale:** display images by 16:9. ■ **Stretch:** display images by window size. ■ **Original:** display images in its original size.
2.	Display Mode	Set the display mode in the window. ■ **Single Channel:** display live video of a single channel. ■ **Left/Right Split:** display live video in left/right split mode. ■ **Top/Bottom Split:** display live video in top/bottom split mode. ■ **Picture in Picture:** open a floating live view window on top of the current window.
3.	Stop / Start Live View	Stop/start live view of the selected channel.
4.	Local Recording	Stop/start local recording.
5.	Live Stream	Select a live video stream: main stream, sub stream or third stream (when enabled).
6.	Image	Open the image setting page. – See 3.5.1 Image.

7.	Play/Stop	Play or stop live video of both channels.
8.	Video Volume	Adjust the audio output volume on the PC.
9.	Microphone	Enable or disable microphone.
10.	Microphone Volume	Adjust the microphone volume on the PC during audio communication between the PC and the camera.
11.	Snapshot	Take a snapshot of the current image displayed on the PC.
12.	Local Recording	Stop/start local recording of both channels.
13.	Two-way Audio	Start or stop two-way audio.
14.	Digital Zoom	Enable or disable digital zoom. – See 2.2.1 Digital Zoom.
15.	Face Snapshot	Start or stop face snapshot. By activating this function, the camera takes face snapshots, and displays them on the right of the live view window. Before activating this function, you must enable **Face Detection** - See *3.6.1.7 Face Detection*.
16.	Full Screen	Display in full screen mode.

Note:

1. To configure individual channels separately, click on the corresponding live view window before proceeding with the configurations.
2. The paths for saving snapshots and local recordings are set in Local Settings. See *3.1.2 Local Parameters*.

Other Models

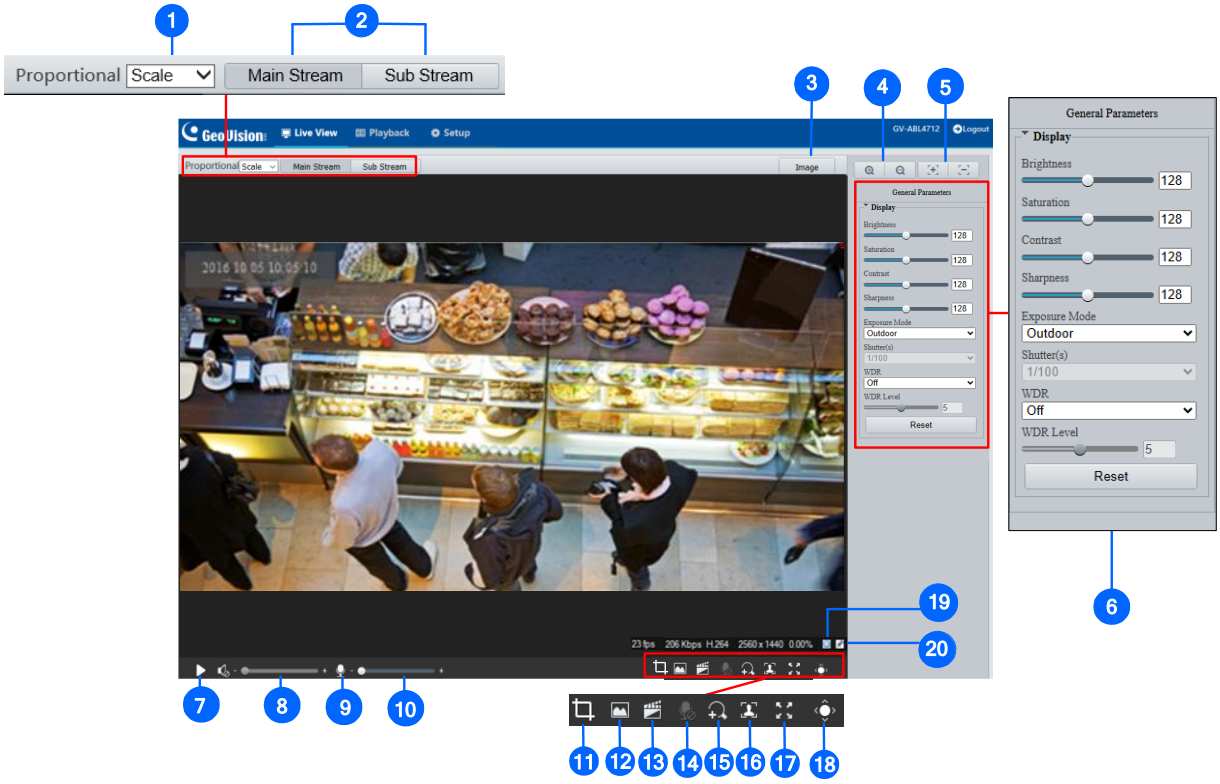

Figure 2-4

No.	Name	Function
1.	Proportional	Set the display ratio of the image. ■ **Scale:** display images by 16:9. ■ **Stretch:** display images by window size. ■ **Original:** display images in its original size.
2.	Live Stream	Select a live video stream: main stream, sub stream or third stream (when enabled).
3.	Image	Open the image setting page. – See *3.5.1 Image*.
4.	Zoom +/-	Only for **models with motorized varifocal lens**, increase or decrease the camera's optical zoom.
5.	Focus +/-	Only for **models with motorized varifocal lens**, increase or decrease the camera focus.
6.	General Parameters	Only for **GV-EBD2704, EBD2705, TBL2705, TBL2706, TDR2704, TDR2705**. Configure the parameters for image enhancement and exposure. See *3.5.1 Image* for details.
7.	Play/Stop	Play or stop live video.
8.	Video Volume	Only for the **audio-supporting models**, adjust the audio output volume on the PC.

9.	Microphone	Only for **audio-supporting models**, enable or disable microphone.
10.	Microphone Volume	Only for **audio-supporting models**, adjust the microphone volume on the PC during audio communication between the PC and the camera.
11.	Calculate Pixels	Only for **GV-EBD2704, EBD2705, TBL2705, TBL2706, TDR2704, TDR2705**. Enable and drag the mouse on the desired object on the live view to calculate its size in pixels.
12.	Snapshot	Take a snapshot of the current image displayed on the PC.
13.	Local Recording	Start or stop local recording.
14.	Two-way Audio	Only for **two-way-audio-supporting models**, start or stop two-way audio.
15.	Digital Zoom	Enable or disable digital zoom. – See *2.2.1 Digital Zoom.*
16.	Face Snapshot	Only for **face-snapshot-supporting models**, start or stop face snapshot. By activating this function, the camera takes face snapshots, and displays them on the right of the live view window. Before activating this function, you must enable **Face Detection** - See *3.6.1.7 Face Detection*.
17.	Full Screen	Display in full screen mode.
18.	Control Panel	Hide or show the camera's optical zoom and focus or the general parameter functions.
19.		Reset the packet loss rate to zero.
20.		Click to always display packet loss rate and bit rate information at the bottom. Click again to restore to only displaying the information for 3 seconds when the mouse cursor is moved onto the live view.

Note:

1. The paths for saving snapshots and local recordings are set in Local Settings. See *3.1.2 Local Parameters*.
2. The No. 19 and 20 buttons will appear on the floating toolbar when you move the mouse cursor onto the live view.

2.2.1 Digital Zoom

To use the digital zoom function, follow these steps:

1. Click (No. 14, Figure 2-3 / No. 15, Figure 2-4) on the toolbar.
2. Click and drag the mouse button in any direction to specify an area.
3. To restore the original image size, right click on the enlarged area.
4. To exit, click (No. 14, Figure 2-3 / No. 15, Figure 2-4) on the toolbar.

2.2.2 Start Recording

For models with local storage, you can start/stop recording manually or by schedule. At the top of Home page, select **Setup**, select **Storage** in the left menu and select **Storage**. For details, see *3.8.1 Formatting Storage*.

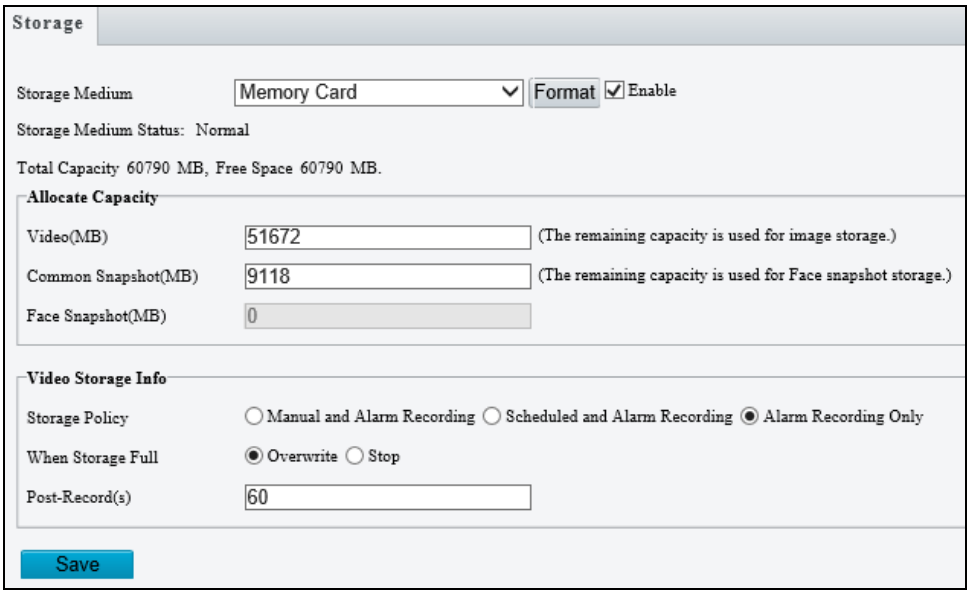

Figure 2-5

2.3 PTZ Control Panel

In this section, you will be guided through the various functions of PTZ Control Panel. The PTZ Control Panel is accessed from the live view interface of the camera.

Note this is only applicable to **GV-PTZ5810-IR**.

2.3.1 Accessing the PTZ Control Panel

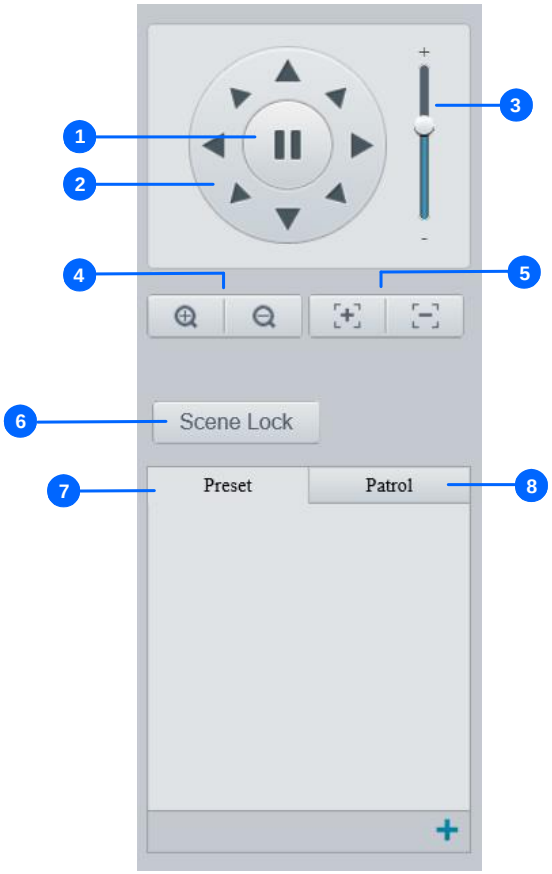

Figure 2-6

No.	Item	Function
1	Auto Pan	Start or stop auto panning of the camera.
2	PTZ Control Panel	Control the direction of the camera and release the control.
3	PTZ Speed	Adjust the moving speed of the PTZ camera.
4	Zoom	Adjust the camera's zoom (optical).
5	Focus	Adjust the camera's focus.
6	Screen Lock	Lock or unlock the camera direction.

7	Preset	Select a preset and the camera goes to the selected preset. -- See *2.3.2 Setting Presets*.
8	Patrol	Select a patrol route. -- See *2.3.3 Setting Patrol*.

2.3.2 Setting Presets

You can create and delete preset points by clicking Preset on the control panel of Live View.

Adding a Preset

1. Select **Preset** on the control panel, and adjust the camera view to the desired direction, zoom and focus.

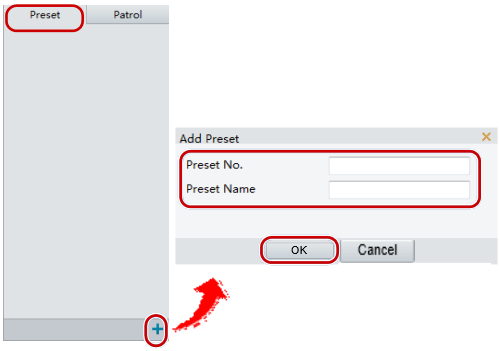

Figure 2-7

2. Click the **Add** button to add it as a preset.
3. Type a number and name for the preset and click **OK**.

Going to a Preset

On the control panel, click for a preset. The PTZ camera goes to the selected preset.

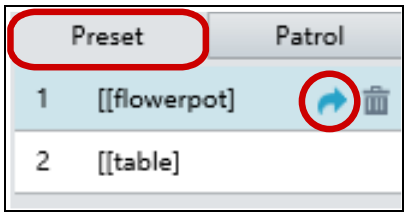

Figure 2-8

Deleting a Preset

On the control panel, click for a preset and confirm the delete.

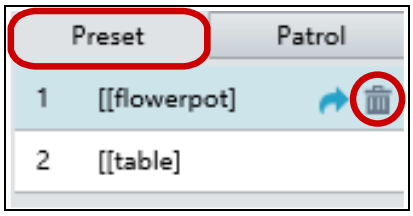

Figure 2-9

2.3.3 Setting Patrol

A patrol route is the track by which the camera follows when moving from a preset to the next. The length of time that the camera stays at each preset is configurable. Multiple patrol routes are allowed for the camera.

Patrol actions include going to a preset and staying at the preset for a certain amount of time before going to the next. You can set the rotation direction, zoom, rotation speed, patrol time, and stay time. You can also record a route and add it to the action list.

Note: To enable **Preset Snapshot**, see 3.*4.5 Patrol*.

To access the Patrol functions, click Patrol on the control panel of Live View.

Adding a Patrol Route

1. On the control panel, click the **Add** button to add a patrol route.

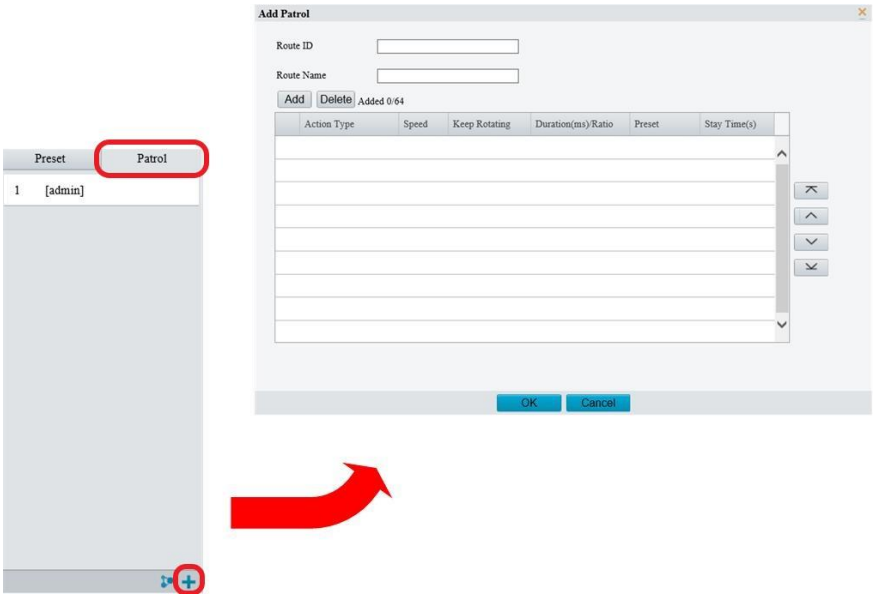

Figure 2-10

2. On the **Add Patrol** page, type the desired route ID and name.
3. Click **Add** to add a patrol action. Use the buttons to adjust the sequence of the actions and click **OK**.

Note:

1. It is recommended that the first action type is **Go to Preset**.
2. If **Keep Rotating** is selected, the camera will rotate at the set speed and zoom in the set direction or position for a certain amount of time.

Starting a Patrol Route

After you have added a patrol route, you can start patrolling by clicking on the control panel.

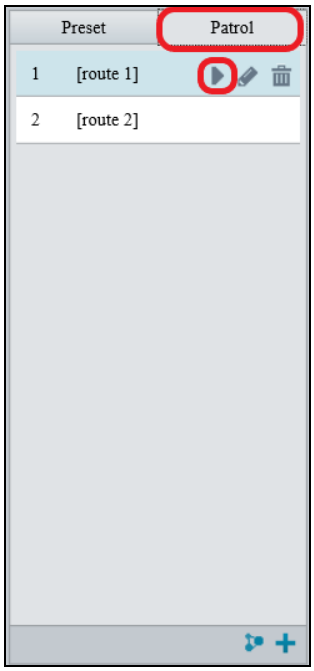

Figure 2-11

Editing a Patrol Route

On the control panel, click to modify the ID, name and movement of an existing patrol route.

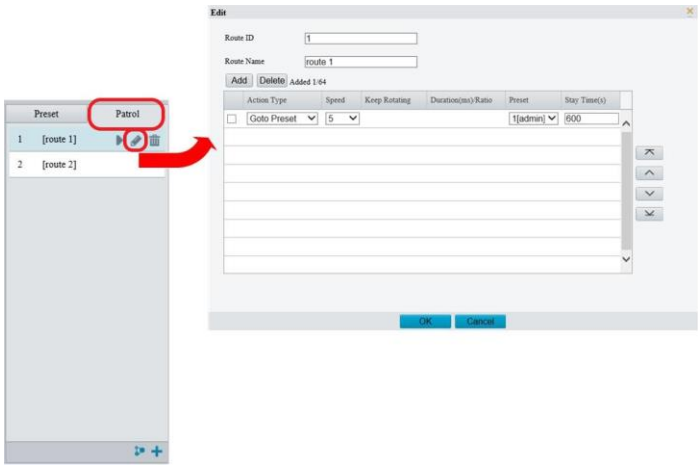

Figure 2-12

Delete a Patrol Route

On the control panel, click for a patrol route and confirm the delete.

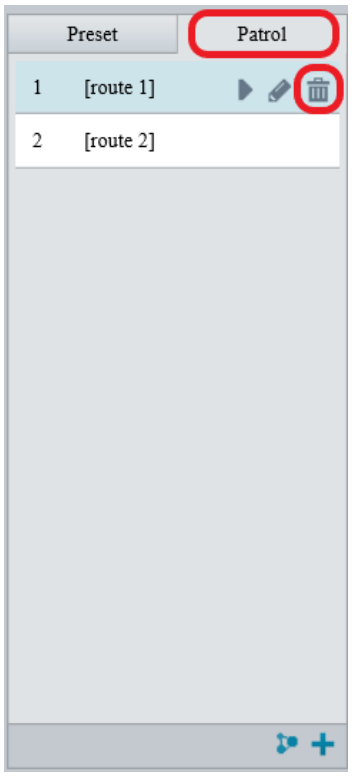

Figure 2-13

Making a Patrol Plan

You can set up the camera to perform different patrol routes at different time periods throughout the week by making a patrol plan.

1. On the control panel, click the **Patrol Plan** button to set the correct patrol time and route.

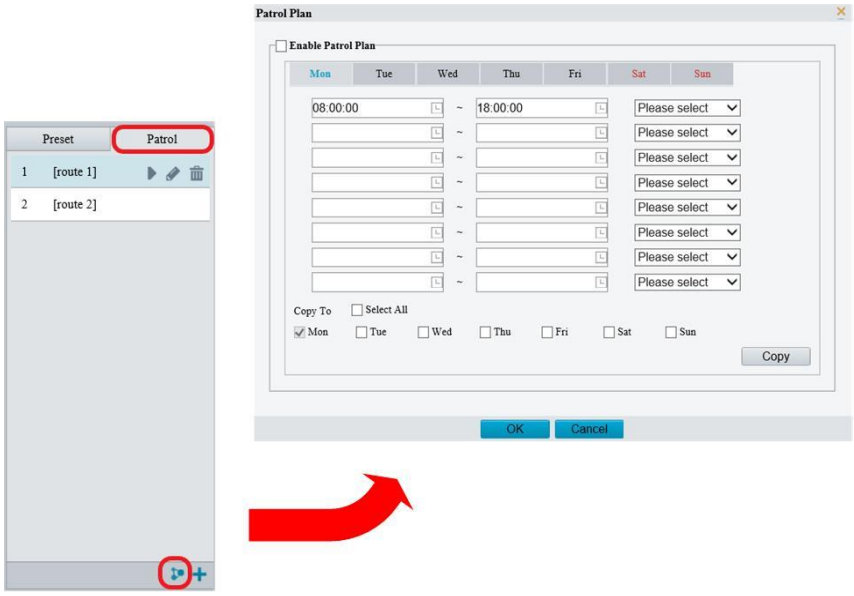

Figure 2-14

2. Select **Enable Patrol Plan**.
3. Click **OK**.

2.4 Playing Back Recorded Videos

To play back recorded videos from the camera's local storage, click **Playback** at the top of the Web interface.

Note this function is only applicable to models with a SD card slot for local storage.

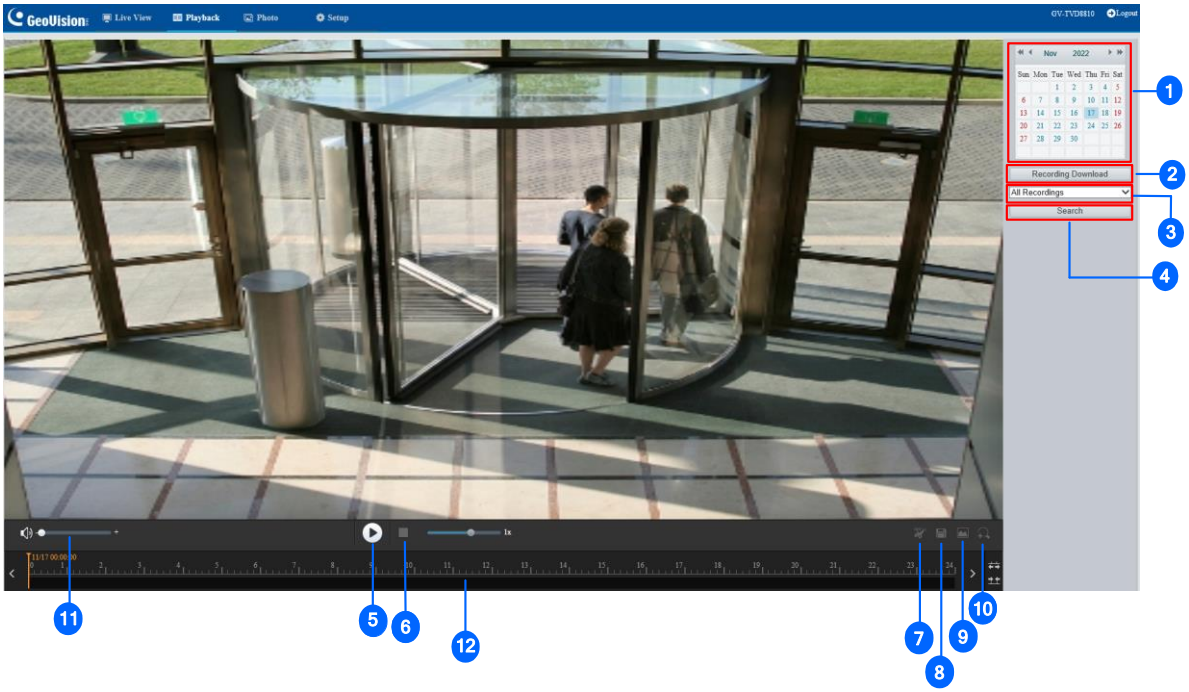

Figure 2-15

No.	Name	Function
1	Date	Select the date of the video to playback.
2	Recording Download	Select to download a recorded video from the camera's local storage. See *2.4.1 Recording Download* for details.
3	Recording Type	Select **All Recordings** or **Alarm Recordings** to access and download the desired recording type.
4	Query/Search	Click **Query** / **Search** to show the list of recorded videos of the date specified.
5	Playback	Play back the recorded video selected.
6	Stop	Stop playback of the recorded video selected.
7	Cut	Cut the clips of the playback recordings.
8	Save	Save the playback recordings.

9	Snapshot	Take a snapshot of the current playback image displayed.
10	Digital Zoom	Enable or disable digital zoom. – See *2.2.1 Digital Zoom.*
11	Volume	Adjust the audio output volume on the PC.
12	Timeline	Users can select the desired time to play the recordings.

Note:

1. To store and play back recorded videos to and from the camera's local storage, make sure to configure the storage settings in **Storage**. For details, refer to *3.7.1 Formatting Storage*.
2. The **Recording Type** option is only available for the models supporting I/O devices.

2.4.1 Recording Download

To download recorded videos from the local storage, follow the steps below:

1. Click **Recording Download** (No. 2, Figure 2-15) on the right of the Playback window.

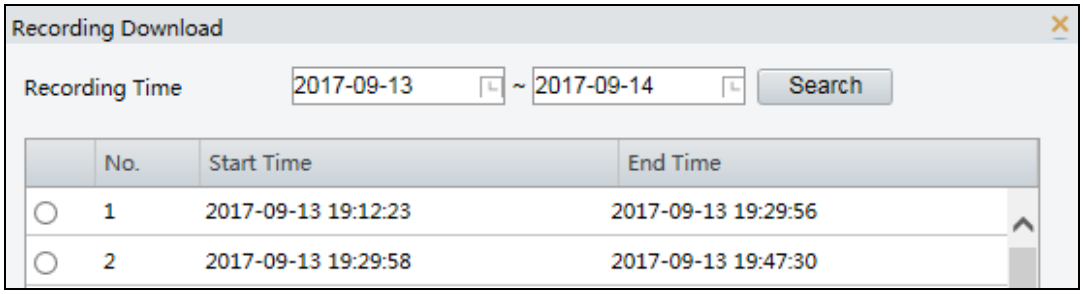

Figure 2-16

2. Search for video within a specified time period. The results are shown in a list.
3. Select your video and click **Download** to download a video to your local path from the local storage.
4. Click **Open** to show the folder in which the downloaded videos are saved.

Chapter 3 Administrator Mode

The Administrator can access and configure the GV-IP Camera through the network. Click **Setup** at the top of the Web interface to access the following configuration tabs: **Common**, **Network**, **Video & Audio**, **Image**, **Intelligent**, **Events**, **Storage**, **Security** and **System**.

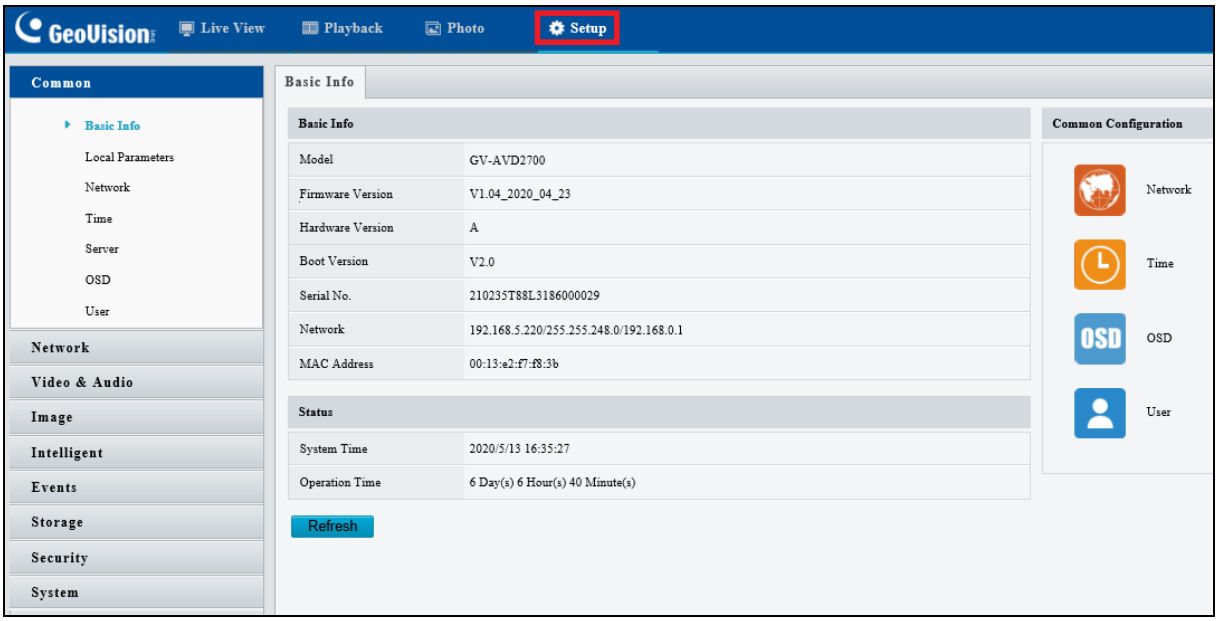

Figure 3-1

List of Options

See the table below for the settings available on the Web interface. Find the topic of interest by referring to the section number prefixed to each option.

IMPORTANT: The available functions may differ between camera models and firmware versions. In addition, based on the model and firmware version, the options in the left-side menu of the Web interface may be organized into different categories (such as Common, Network, etc.).

3.1 Common	3.1.1 Basic Info 3.1.2 Local Parameters
3.2 Network	3.2.1 Network 3.2.2 DNS 3.2.3 Port 3.2.4 DDNS 3.2.5 E-mail 3.2.6 SNMP 3.2.7 802.1x 3.2.8 QoS 3.2.9 WebSocket
3.3 Video & Audio	3.3.1 Video 3.3.2 Snapshot 3.3.3 Audio 3.3.4 ROI 3.3.5 Media Stream
3.4 PTZ	3.4.1 Basic Settings 3.4.2 Home Position 3.4.3 Limit 3.4.4 Remote Control 3.4.5 Patrol 3.4.6 Orientation
3.5 Image	3.5.1 Image 3.5.2 OSD 3.5.3 Privacy Mask
3.6 Intelligent	3.6.1 Smart Settings 3.6.2 Advanced Settings
3.7 Events	3.7.1 Motion Detection 3.7.2 Tampering Alarm 3.7.3 Audio Detection 3.7.4 Alarm Input 3.7.5 Alarm Output 3.7.6 One-Key Disarming

3.8 Storage	3.8.1 Formatting Storage 3.8.2 FTP 3.8.3 Backing Up Storage
3.9 Security	3.9.1 User 3.9.2 Network Security
3.10 System	3.10.1 Time 3.10.2 Server 3.10.3 Maintenance 3.10.4 Network Diagnosis 3.10.5 Log 3.10.6 Ports and Devices

3.1 Common

Under the Common tab, the Administrator can find the general settings of the camera, as well as shortcuts to the following setting pages.

- **Network:** See *3.2.1 Network* for details.
- **Time:** See *3.10.1 Time* for details.
- **OSD:** See *3.5.2 OSD* for details
- **User:** See *3.9.1 User* for details

3.1.1 Basic Info

You can view the current status of your camera. Click **Refresh** for the latest status information. Under **Common Configuration** on the right, you can click on the icons to quickly access the corresponding configuration pages.

Figure 3-2

3.1.2 Local Parameters

You can set the local parameters for your PC.

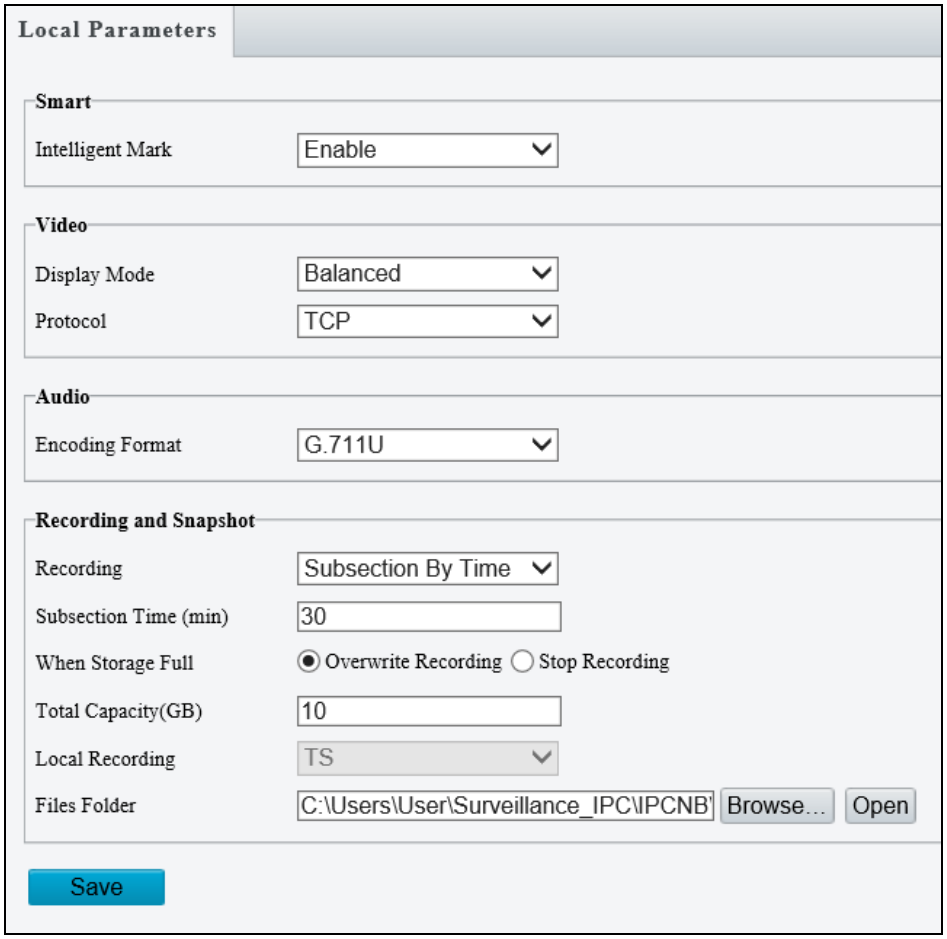

Figure 3-3

[Smart / Intelligent Mark]

- **Intelligent Mark:** When enabled, the detection line or area as defined by **Smart Settings** will be displayed. See details in *3.6.1 Smart Settings*.
- **Untriggered Target:** When enabled, an on-screen mark will display on the target and track it as defined by **Smart Settings** on Live View. You must set up Smart Settings first for this function to work, see *3.6.1 Smart Settings* (not applicable to GV-BLFC5800 / EBFC5800 / TVD4811).
- **Object Attributes:** When this feature and snapshot are enabled, snapshot thumbnails will show object attributes (only applicable to GV-EBDP5800 / 8800, TBLP5800 / 8800).
- **Font Size:** Set the font size of object attributes, including Large, Medium, and Small (only applicable to GV-EBDP5800 / 8800, TBLP5800 / 8800).

Note: The Smart / Intelligent Mark option is not available for GV-ABL2701 series / 2703 series / 4701 series / 4703 / 4711, GV-ADR2701 / 2702 / 4701 / 4702, GV-EBD2704 / 2705 / 4701 / 4702 / 4704 / 4712, GV-TBL2703 series / 2705 / 2706 series / 4700 / 4703 / 4705 / 4711, GV-TDR2702 series / 2704 series / 2705 / 4702 series / 4703 series / 4704 series, GV-TFD4700, GV-TMS8800, GV-TVD4700 / 4711, and GV-FER5702.

[Video]

- **Processing Mode**
  - ⊙ **Real-Time Priority**: Select this if the network is in good condition.
  - ⊙ **Fluency Priority:** Select this if you want short time lag for live video.
  - ⊙ **Ultra-low Latency**: Select this if you want the minimum time lag for live video.
- **Display Mode:** Set the display mode according to the network status, including **Min. Delay**, **Balanced Delay**, and **Fluent Delay** for low to high delay. Or customize the display mode parameters by selecting **Customize / Custom**.
- **Protocol:** Select the protocol used to transmit media streams to be decoded by the PC.

[Audio] This function is only applicable to audio-in-supporting models.

- **Encoding Format:** Select the format used to encode audio.

[Recording and Snapshot]

- **Recording**
  - ⊙ **Subsection by Time (1~60):** Set a maximum time length of each recording file. If you select 5 minutes, a 30-minute event will be chopped into six 5-minute event files.
  - ⊙ **Subsection by Size:** Set a maximum size limit of each recording file.
- **When Storage Full**
  - ⊙ **Overwrite Recording**: When the assigned storage space on the computer is full, the camera deletes the oldest existing recording files to make room for the new ones.
  - ⊙ **Stop Recording**: When the assigned storage space on the computer is full, recording stops automatically.
- **Total Capacity (1~1024):** Set a capacity limit to the assigned storage space on the computer.
- **Local Recording:** Set the file format for saving local recordings, including TS and MP4.
- **Files Folder**: Click **Browse** to set a folder to store the recorded videos and captured snapshots at your local computer.

3.2 Network

The network section allows you to configure the network settings, modify ports, configure FTP server, and set up e-mail for notification.

3.2.1 Network

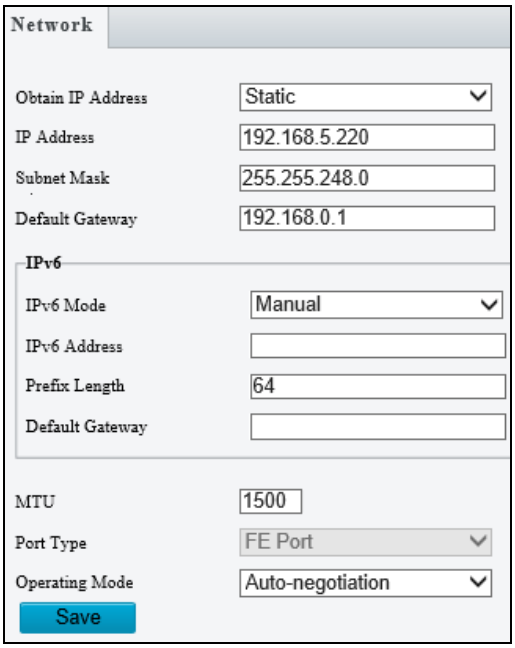

Figure 3-4

- **Obtain IP Address:** Select **Static IP**, **DHCP**, or **PPPoE** according to your network environment.

  - **Static IP address:** Assign a static IP or fixed IP to the camera. Type the camera's IP address, Subnet Mask and Router/Gateway.

Parameters	Default
IP address	192.168.0.10
Subnet Mask	255.255.255.0
Router/Gateway	192.168.0.1

  - **PPPoE:** The network environment is xDSL connection. Type the Username and Password provided by ISP to establish the connection. If you use the xDSL connection with dynamic IP addresses, first use the DDNS function to obtain a domain name linking to the camera's changing IP address.

- ⊙ **DHCP:** The network environment has a DHCP server which will automatically assign a dynamic IP address to the camera. You can look up the current IP address using GV-IP Device Utility.

- **IPv6:** Type the camera's **IPv6 Address** and **Default Gateway**. Optionally change the **Prefix Length** according to your network settings.
- **MTU:** Type the Maximum Transfer Unit (MTU). The default value is **1500.**
- **Operating Mode:** Select a mode to control the bandwidth.

3.2.2 DNS

Type the camera's **Preferred DNS Server** and **Alternate DNS Server**.

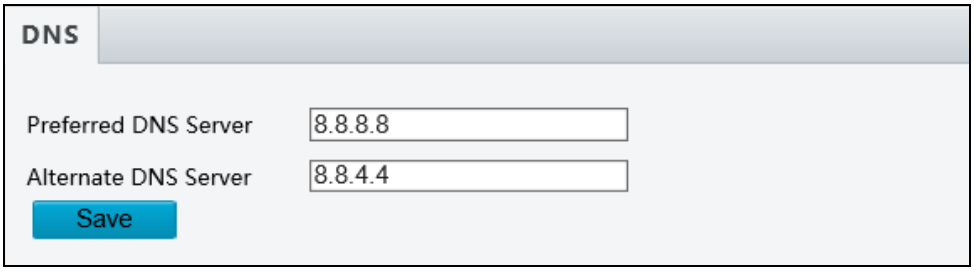

Figure 3-5

3.2.3 Port

Port

You can modify the default **HTTP**, **HTTPS** and **RTSP** ports if necessary.

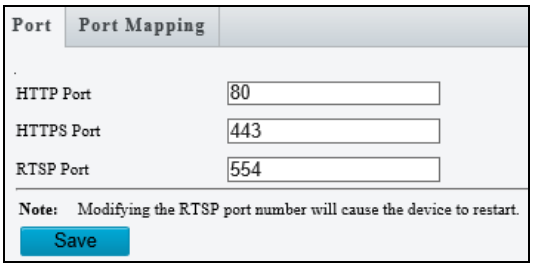

Figure 3-6

Port Mapping

This function can automatically forward and open certain ports on your router, allowing connection to your camera from the Internet.

1. Enable **Port Mapping**, and select **UPnP** or **Manual** for **Mapping Type**.
   - If you select **UPnP**, select between **Auto** and **Manual** to have the router automatically configure the external ports or manually configure the external ports. If the configured port is occupied, the **Status** will show inactive.

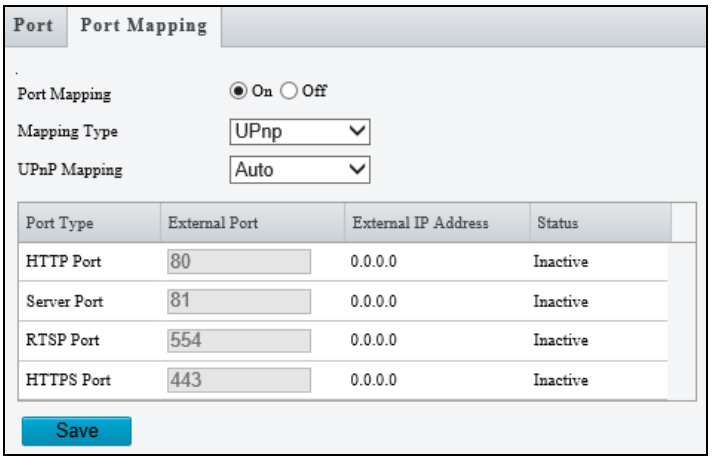

Figure 3-7

   - If you select **Manual**, configure external ports. External IP is applied to the camera automatically.

2. Click **Save**.

Note: For this function to work, your router needs to support **port forwarding**.

3.2.4 DDNS

DDNS (Dynamic Domain Name System) provides a convenient way of accessing the camera when using a dynamic IP. DDNS assigns a domain name to the camera, so that the Administrator does not need to go through the trouble of checking if the IP address assigned by DHCP Server or ISP (in xDSL connection) has changed.

Figure 3-8

1. Click **On** to enable **DDNS Service**.
2. Select the DDNS service provider you have registered with. If you choose DynDNS, skip to *Step 5*.
3. Copy the website address http://ns.gvdip.com/register.aspx to a browser to access Geovision DDNS service.

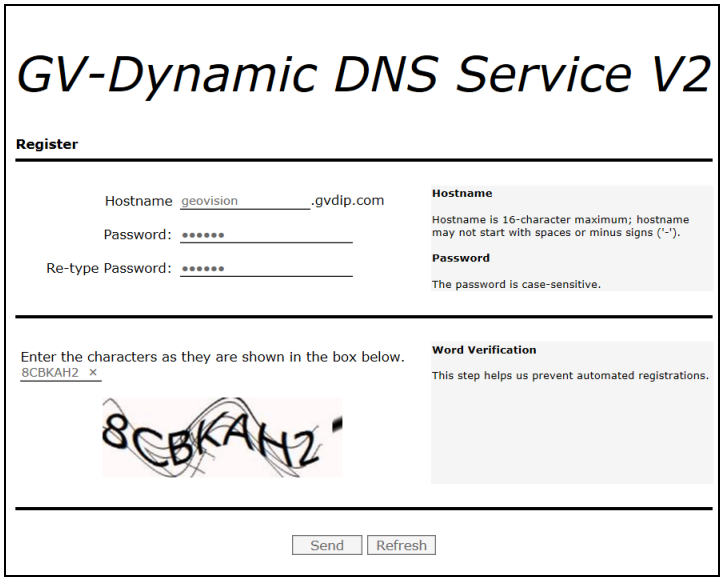

Figure 3-9

4. In the Geovision DDNS Server page, type a desired **Hostname** and **Password**. Re-type Password and type the verification letters shown in the image. Click **Send**.
5. In the Web interface of your camera, type **Username**. The username is the hostname registered in DDNS Server.
6. Type **Password**, and **Confirm Password**.
7. Click **Save**.

After the DDNS is successfully configured, a notification bar will be displayed as shown in *Figure 3-10*. Next time when you log in the camera, type the domain name like this: (hostname).gvdip.com; for example, geovision.gvdip.com.

Figure 3-10

3.2.5 E-mail

After the configuration of E-mail, you will be able to send messages to the specified E-mail addresses when alarms are triggered.

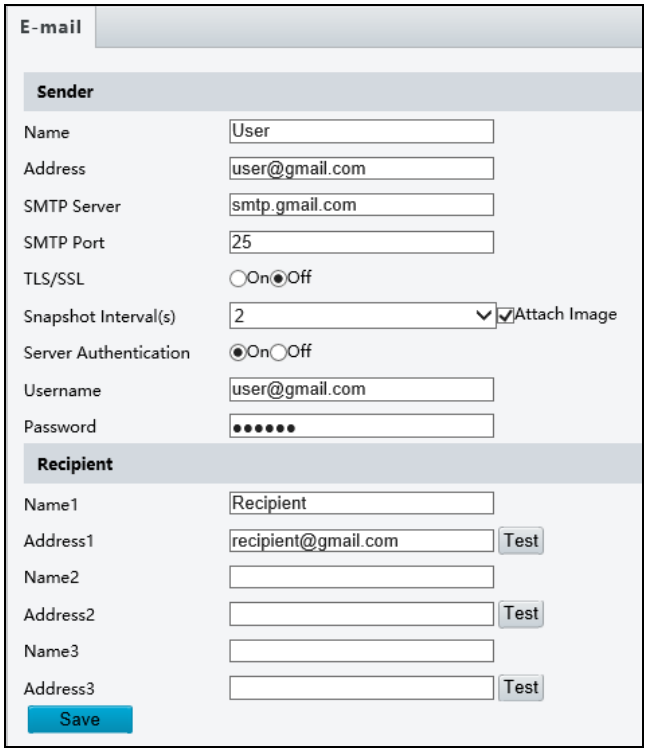

Figure 3-11

1. Type the **Name** and **Address** of the sender.
2. Type the **SMTP Server**.
3. Type the **SMTP Port** number.
4. To send the e-mail through TLS / SSL encryption, enable **TLS/SSL**.
5. Enable **Attach Image** to include 3 instant snapshots as attachment in the e-mail according to the **Snapshot Interval** specified.
6. If the SMTP Server needs authentication, enable **Server Authentication** and type a valid username and password to log in the SMTP server.
7. Type the name(s) and e-mail address(s) of the **Recipient**(s).
8. Click **Save**.

Note: To send snapshots to the specified E-mail addresses, make sure to enable the **Snapshot** function. For more detailed instructions, refer to *3.3.2 Snapshot*.

3.2.6 SNMP

Users can transfer the configurations of the device through SNMP protocol to communicate with and/or integrate it into a central server.

Figure 3-12

- **SNMP Switch:** Select **On** to enable the SNMP function.
- **SNMP Type:** Select the type of SNMP desired, between SNMPv3 and SNMPv2.
- **Authentication Mode:** Define a desired password for authentication between the device and the central server.
- **Encryption Mode:** Define a desired password for encryption that needs to be matched by the central server.

Click **Save** for the changes to take effect.

3.2.7 802.1x

IEEE 802.1x is an IEEE standard for port-based Network Access Control. It provides an authentication mechanism to devices wishing to attach to a LAN or WLAN.

Figure 3-13

1. Enable **IEEE 802.1x**.
2. Type the **Username** and **Password**. Type the password again for confirmation.
3. Click **Save**.

Note: To use this function, your network environment needs to support **802.1x**.

3.2.8 QoS

QoS is the prioritization of network traffic used to ensure resource reservation under abundant data flow.

Figure 3-14

- **Audio & Video**: Optionally modify the priority of value of Audio & Video. The higher the value, the higher the priority.
- **Alarm Report**: Optionally modify the priority of value for Alarm Report. The higher the value, the higher the priority.
- **Configuration Management**: Optionally modify the priority for Configuration Manager. The higher the value, the higher the priority.
- **FTP**: Optionally modify the priority of value for FTP. The higher the value, the higher the priority.

Click **Save** the apply the QoS settings configured.

3.2.9 WebSocket

WebSocket can connect your camera to a third-party platform and enable remote management of the camera from the third-party platform, including viewing device version and capabilities, control PTZ, and receive alarms.

Figure 3-15

- **WebSocket**: Select to enable or disable WebSocket.
- **Destination IP**: Enter the IP address of the third-party platform.
- **Destination Port**: Enter the listener port of the third-party platform.
- **Device ID**: The default device ID is the device's serial number. You can set a device ID as needed.
- **Authentication Key**: Enter the authentication key used to connect the camera to the third-party platform. Make sure the authentication keys configured on the camera and the third-party platform are the same. Note if you first choose not to enable Authentication Key and then enable it after the camera is connected to the platform, authentication does not take effect immediately; it will take effect when the next time the camera is successfully connected to the platform.
- **Confirm Authentication Key:** Confirm the authentication key by entering it again.
- **Online Status**: Check whether the device is successfully connected to the third-party platform.

3.3 Video & Audio

This section allows you to configure the three video streams and audio input.

The audio function is only applicable to audio-supporting models

3.3.1 Video

You can set video parameters that your camera supports. You may also enable the sub-stream and third stream as needed. The third stream is disabled by default.

Figure 3-16

- **Select Channel:** Select the desired channel for video parameters configuration. Note this is only applicable to GV-TMS8800.
- **Capture Mode:** Sets the resolution of Main Stream and the maximum frame rate allowed.

Note: The Resolution under Main Stream will change according to the resolution selected for Capture Mode.

The following options are available for the main, sub and third streams.

- **Video Compression:** Set the codec type to **H.265, H.264** or **MJPEG**.
- **Resolution**: Select different resolutions for each stream.

Note:

1. Changing the resolution in this option will not affect the Capture Mode.
2. For GV-ABL4711, GV-EBD4701 / 4712, GV-TBL4700 / 4711, GV-TDR4703 series, GV-TFD4700, and GV-TVD4700 / 4711, the resolution of the main stream cannot be modified.

- **Frame Rate**: Select a frame rate for encoding images. The unit is frame per second.
- **Bit Rate**: Set the value between **128~16384**.
- **Bitrate Type**:
  - ⊙ **CBR**: The camera transmits data at a constant data rate by varying the quality of the video stream.
  - ⊙ **VBR**: The quality of the video stream is kept as constant as possible at the cost of a varying bitrate.
- **Image Quality**: When VBR is selected for the encoding mode, you can move the slider to adjust the desired quality level the for images. Moving the slider toward **Bit Rate** decreases the bit rate and may affect image quality. Moving the slider toward **Quality** increases the bit rate and improves image quality.
- **I Frame Interval:** Set the number of frames, from 5 to 250, between each I frame (key frame). This option is only available when H.265 or H.264 is selected as the codec.
- **GOP:** The GOP is IP by default.
- **Smoothing**: Set the extent of smoothing. Choosing **Clear** means disabling **Smoothing**. Moving the slider toward **Smooth** increases the level of smoothing but will affect image quality.
- **Smart Encoding**: Select **Basic Mode** to enable Smart Encoding.

[BNC Output] Only for **GV-AVD2700 / 4710 / 8710**, **GV-ABL8712** and **GV-TBL8710**, the status of the BNC device is shown.

- **Mode:** Set the signal format of the video output to either **NTSC** or **PAL**.

3.3.2 Snapshot

Using the Snapshot function, when an alarm is triggered, the camera will automatically upload the captured snapshots to the FTP server and/or send snapshots to the specified e-mail addresses.

Note: If **Upload Images** is selected in *Figure 3-67, 3.8.2 FTP*, the captured snapshots will only be sent to the FTP server.

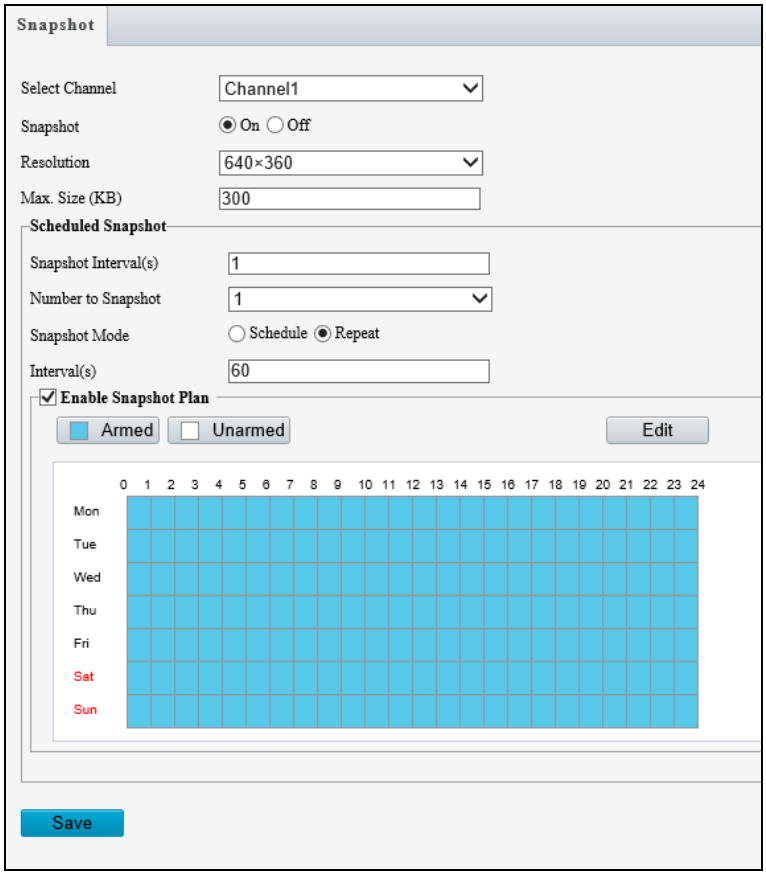

Figure 3-17

1. Select the desired channel from the **Select Channel** dropdown list (only applicable to GV-TMS8800).
2. Select **On** to enable **Snapshot**.
3. Select the **Resolution**.
4. Specify the maximum size (250~1500 KB) of the snapshot image for **Max. Size (KB)**.
5. Specify the length of interval (1~60 sec) between snapshots for **Snapshot Interval(s)**.

6. Choose the **Number** (of snapshot) **to Snapshot** upon alarm trigger.
7. Select **Schedule** or **Repeat** to set up the **Snapshot Mode**.
   - If you select **Schedule**, click + to specify the desired time to take a snapshot.
   - If you select **Repeat**, type the interval, from 1 to 86400 seconds, to repeat the process of taking snapshots and sending them to the FTP server or e-mail.
8. Click **Save**.
9. For **Snapshot Plan**, follow *Step 7* at the bottom of *3.6.1.1 Cross Line*.

3.3.3 Audio

Note this function is only applicable to audio-supporting models.

You can configure the audio settings of the camera.

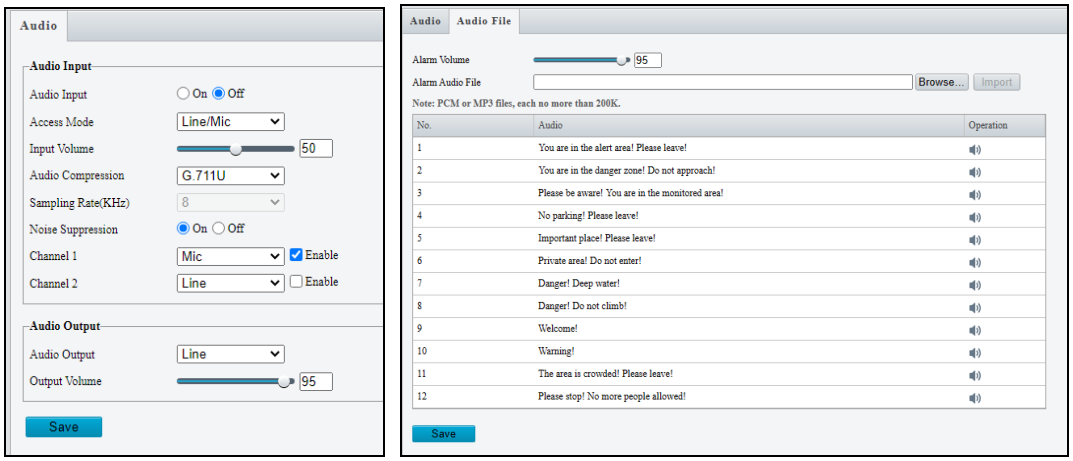

Figure 3-18

- **Audio Input**: Select **On** to enable audio input.
- **Input Volume**: Set the audio signal amplification for sampling. The greater the volume, the greater amplification.
- **Audio Compression:** Select an audio codec.
- **Noise Suppression**: Select **On** to reduce the noise of the audio.
- **Channel 1 / 2**: Click **Enable** to enable audio in through the camera's built-in microphone and/or Audio In wire(s) depending on the model.
- **Audio Output:** Select the source of audio output.
- **Output Volume:** Set the volume for audio output.
- **Alarm Audio File:** For GV-TBL8804 and PTZ5810-IR only, select **Browse** to locate a custom PCM / .mp3 audio file, and click **Import**.

Note: Connection(s) to any software/application must be reestablished when the camera's audio input channel has been alternated for the change to take effect.

3.3.4 ROI

When Region of Interest (ROI) is enabled, the system ensures image quality for ROI first if the bit rate is insufficient.

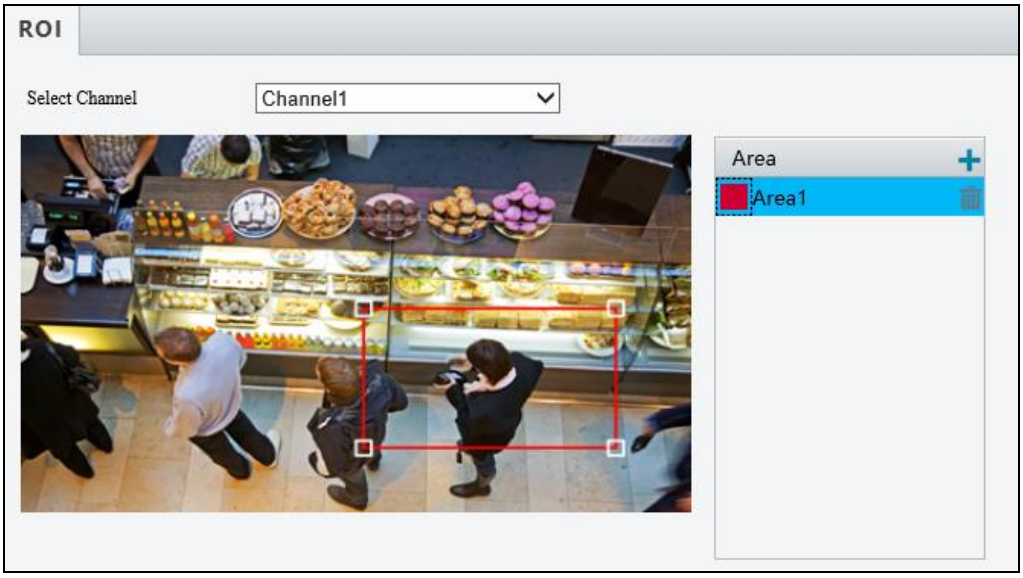

Figure 3-19

1. Select the desired channel from the **Select Channel** dropdown list (only applicable to GV-TMS8800).
2. Click + to enable and add ROI.
3. Click and drag on the image to specify an area.
4. To add additional ROI areas, repeat steps 1 and 2.
5. To delete an ROI area, click 🗑.

Note: Up to **two** ROI areas can be specified for GV-ABL2703 series / 4703, GV-ADR2702 / 4702, GV-TBL2703 series / 4703 and GV-TDR2702 series / 4702 series, **four** for GV-ABL4711, GV-EBD4701 / 4712, GV-TBL4711, GV-TDR4703 series, GV-TFD4700, and GV-TVD4711, and **eight** for all other models.

3.3.5 Media Stream

Media Stream

By configuring media stream, you can set the camera to transmit code streams by UDP or TCP protocol to a specified IP address and port number. The settings can be saved and take effect after the camera is rebooted.

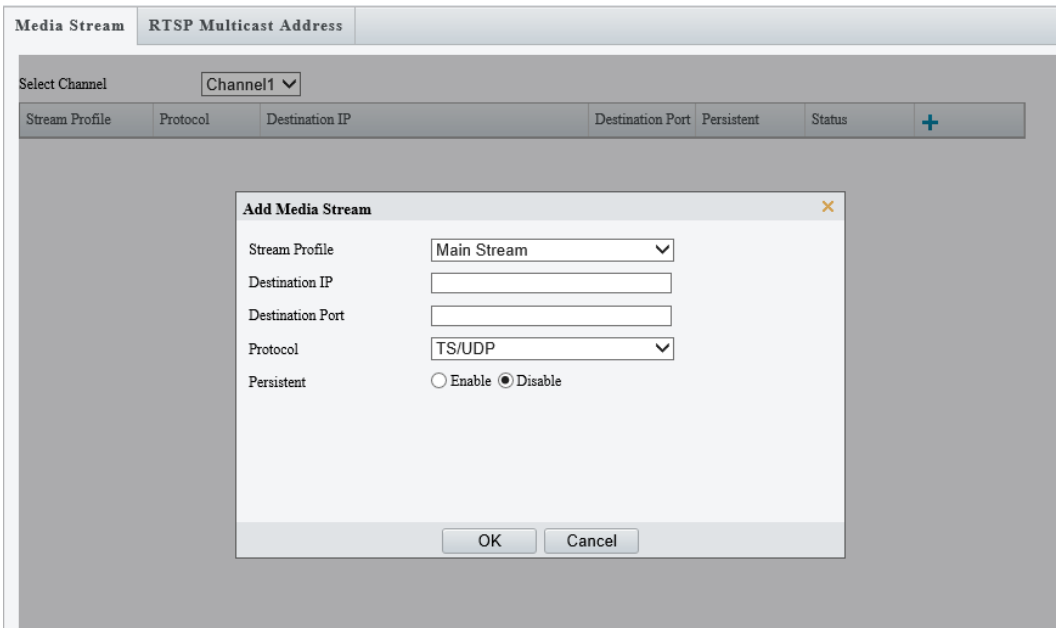

Figure 3-20

1. Select the desired channel from the **Select Channel** dropdown list (only applicable to GV-TMS8800).
2. Click + and select a stream from the **Stream Profile** drop-down list.
3. Type the **Destination IP** and **Port** number of the unicast or multicast group for the decoding device that receives video streams from the camera.
4. Select a **Protocol** type for the media stream.
5. If you want the device to automatically establish the media stream that has been previously configured after the restart, **Enable Persistent**.
6. To delete a stream, click 🗑.
7. Click **OK** to complete the settings.

RTSP Multicast Address

After an RTSP multicast address is configured, the third-party player can request for the RTSP multicast media stream from the camera through RTSP protocol.

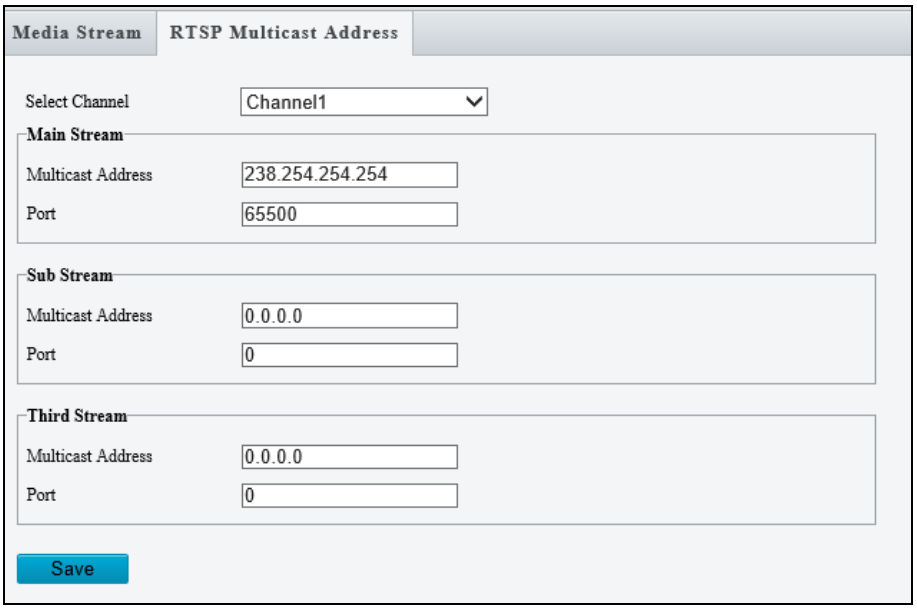

Figure 3-21

1. Select the desired channel from the **Select Channel** dropdown list (only applicable to GV-TMS8800).
2. Type the **Multicast Address** (224.0.1.0 to 239.255.255.255) and **Port** number (0 to 65535).
3. Click **Save**.

For RTSP Multicast command, see *Appendix A*.

3.4 PTZ

This section allows you to configure basic PTZ settings, home position, remote control, orientation and more on the PTZ camera.

Note this is only applicable to **GV-PTZ5810-IR**.

3.4.1 Basic Settings

Basic settings allows you to configure basic PTZ settings related to the camera's position and PTZ control timeout.

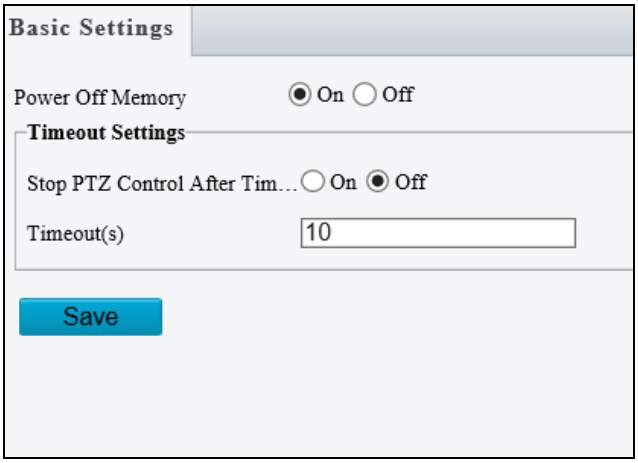

Figure 3-22

[Power Off Memory] Select **On** to enable this function. When restarted, the camera returns to the position before it's powered off.

[Timeout Settings] Select **On** and set the timeout duration. PTZ control is disabled after the set timeout duration.

3.4.2 Home Position

The PTZ camera will return to home position if no operation is made within a specified period. Home Position allows you to select the desired preset as the home position and set the time.

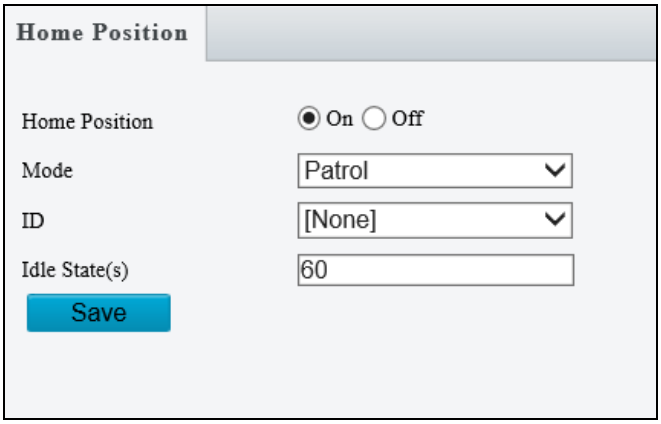

Figure 3-23

3.4.3 Limit

Users can set PTZ limitations to prevent the camera from hitting obstacles such as walls.

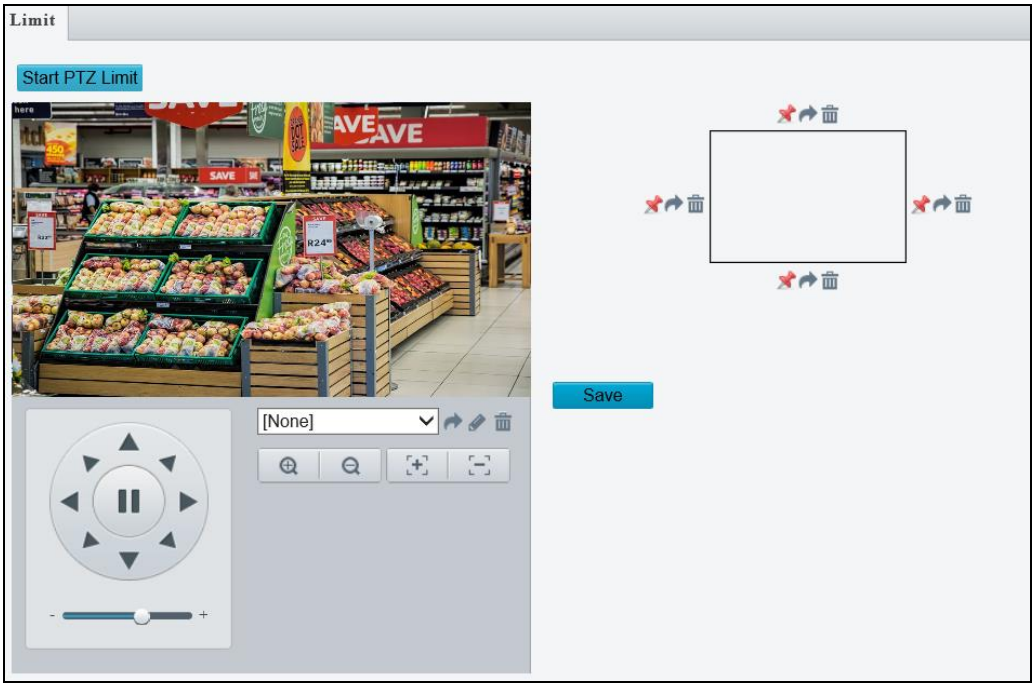

Figure 3-24

1. Click **Start PTZ Limit** to enable the function.
2. Adjust the view in such a way that it reaches the PTZ limit you want to set.
3. Click to set the position relative to the current dome view as a limit. For example, click the at the top to set the upper limit.
4. Repeat Step 2 & 3 to set all limits as needed and click **Save**.

3.4.4 Remote Control

You can connect a third-party PTZ remote control program to your GV-IR IP Mini PTZ Camera once this function is enabled.

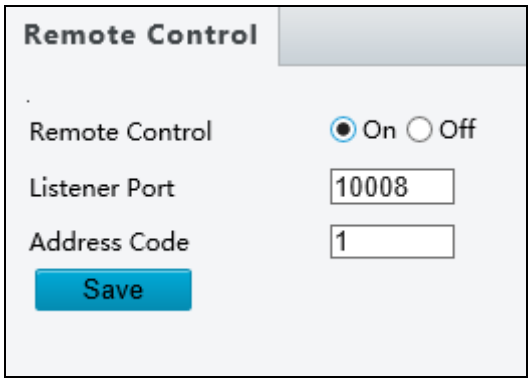

Figure 3-25

1. Specify the **Listener Port** to which the third-party PTZ remote control program connects.
2. Assign an individual **Address Code** (between 0 ~ 255) to each PTZ remote control program
3. Click **Save**.

Note: To use this function, your router needs to support **port forwarding**.

3.4.5 Patrol

You can set the camera to take a snapshot and upload the image to the FTP server when the camera goes to the preset during the patrol route.

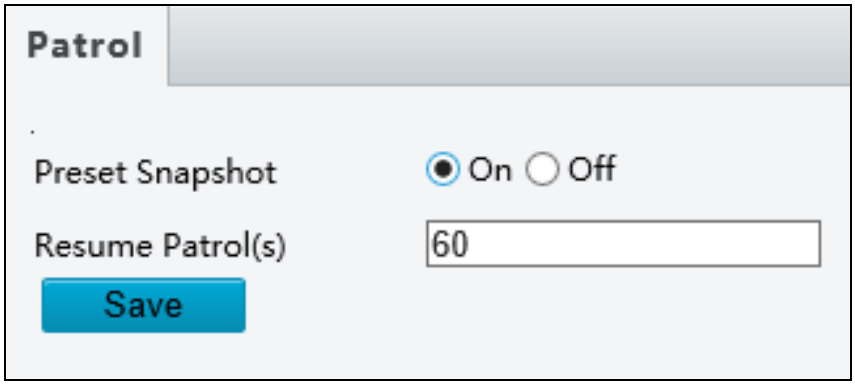

Figure 3-26

1. Enable **Preset Snapshot**.
2. Type the Resume Patrol(s) interval in seconds to upload snapshots.
3. Click **Save**.

Note: To use this function, make sure to configure the settings in *3.8.2 FTP first*.

3.4.6 Orientation

You can manually set a north direction or home position for the camera.

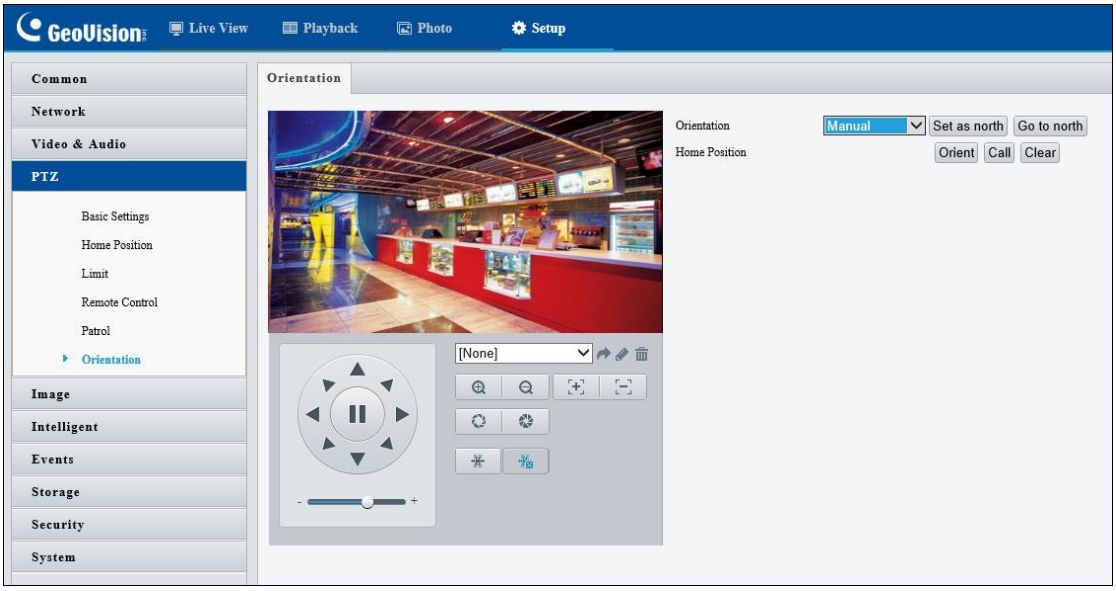

Figure 3-27

[Orientation]

- **Set as north:** After the camera is positioned to a specific direction, the position will be set as the north direction.
- **Go to north:** The camera will move to the specified north direction no matter which direction it points to.

[Home Position]

- **Orient**: Click **Orient** to set a position as the home position.
- **Call**: Click **Call** to move the camera to the specified home position no matter which direction it points to.
- **Clear**: Click **Clear** to delete the home position.

3.5 Image

This section introduces the **Image Settings**, **On-screen Display** and **Privacy Mask**.

3.5.1 Image

This page allows you to adjust image settings such as brightness, exposure, IR illumination, white balance, and focus.

Note: Make sure to select the desired channel for configuration before proceeding with the following items for **GV-TMS8800**.

[Scene]

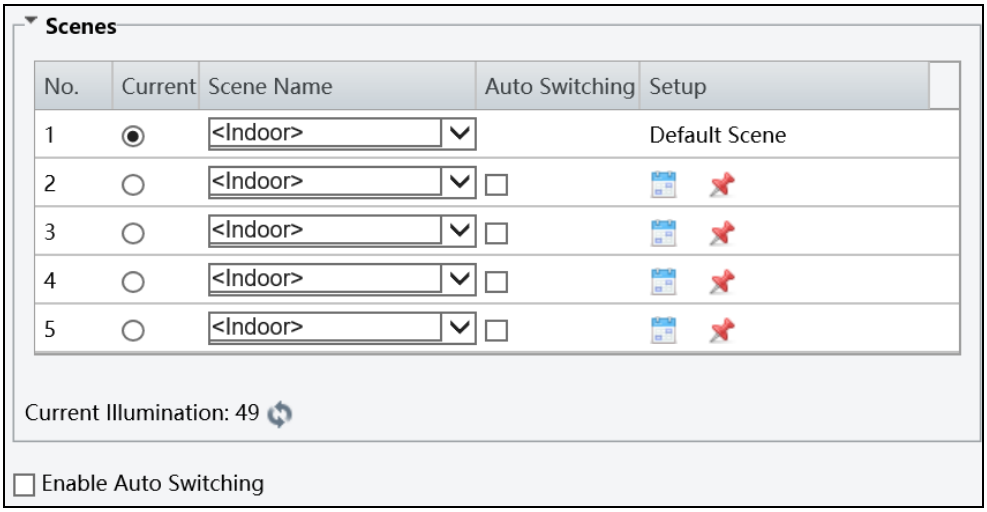

Figure 3-28

- **Current**: Indicates the scene that is being used.
- **Scene Name**: When you select a scene, the corresponding image parameters are displayed. You can adjust the image settings according to actual needs.
- **Auto Switching**: Indicates whether to add a scene to the auto-switching list.
- **Setup**:
  - **Click** to set a schedule for illumination.
  - **Click** to set a scene as the default scene.
- **Enable Auto Switching**: Allow the camera to switch to the scene automatically when the condition for switching to a non-default scene is met.

[Image Enhancement]

Figure 3-29

- **Brightness:** Adjust the degree of brightness of the image.
- **Saturation:** Adjust the amount of hue contained in a color.
- **Contrast:** Set the degree of difference between the blackest pixel and the whitest pixel.
- **Sharpness:** Adjust the sharpness of the image.
- **2D / 3D Noise Reduction**: Reduce the noise of the image.
- **Image Rotation**: Change the rotation of the image by selecting **Normal**, **Flip Vertical**, **Flip Horizontal**, **180°**, **90° Clockwise**, or **90° Anti-clockwise**.

[Exposure]

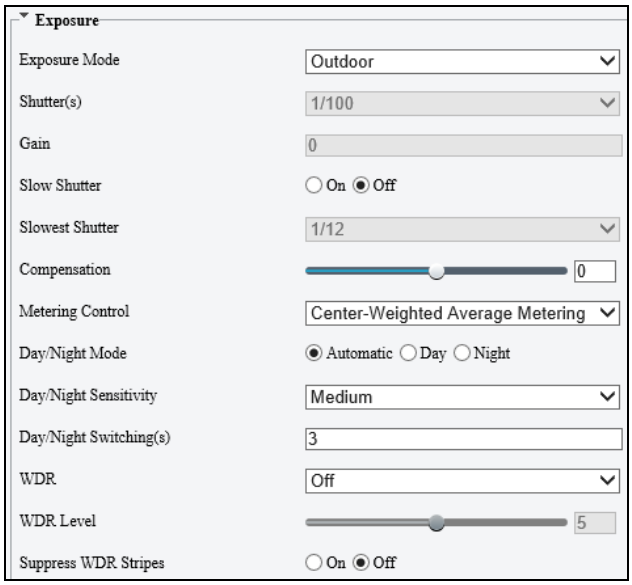

Figure 3-30

- **Exposure Mode:** Select the correct exposure mode to achieve the desired exposure effect. The default setting is Outdoor.
  - **Low Motion Blur:** Improve image quality by reducing motion blur in low light conditions.

- **Shutter(s):** The length of time that allows light to enter into the lens. You can set a shutter speed when **Exposure Mode** is set to **Manual** / **Custom**.

Note: If **Slow Shutter** is set to **Off**, the reciprocal of the shutter speed must be greater than the frame rate.

- **Gain:** Control image signals so that the camera outputs standard video signals according to the light condition. You can set this parameter only when **Exposure Mode** is set to **Manual** / **Custom**.
- **Slow Shutter:** Improve image brightness in low light conditions.
- **Slowest Shutter:** Set the slowest shutter speed that the camera can use during exposure.
- **Compensation:** Adjust the compensation value as required to achieve the desired effects. You can set this parameter only when **Exposure Mode** is not set to **Manual** / **Custom**.
- **Linear Stripe Suppression:** For indoor use only. Reduce stripes by limiting shutter frequency. You can only enable either Line Strip Suppression or WDR, but not both at the same time.
- **Metering Control**: Set the way the camera measures the intensity of light. You can only set this parameter when **Exposure Mode** is not set to **Manual** /**Custom**.
  - **Center-Weighted Average Metering:** Measure light mainly in the central part of the images.
  - **Evaluative Metering (BLC):** Measure light in the customized area of the images.
  - **Face Metering**: Measure light where facial recognition is established.
  - **Spot Metering**: Measure light spot(s) in the specified area of the images.
- **Day/Night Mode:** Select **Automatic** for automatic switch between day mode and night mode depending on the amount of light detected. Select **Night** to produce high-quality black and white images using the existing light. Select **Day** to produce high-quality color images using the existing light. Select **Input Boolean** to trigger an output device and switch on night mode upon common alarm / AI event alarm (only applicable to GV-EBFC5800 / GV-TDR8802).
- **Day/Night Sensitivity:** Set the light threshold for switching between day mode and night mode. The higher the sensitivity, the more easily the camera is to switch from day mode to night mode and vice versa.

- **Day/Night Switching(s):** Set the length of time before the camera switches between day mode and night mode after the conditions for switching are met.
- **WDR:** Enable WDR to distinguish the bright and dark areas in the same image.
- **WDR Level:** After enabling the WDR function, you can improve the image by adjusting the WDR level.
- **Suppress WDR Stripes**: Enable Suppress WDR Stripes to automatically adjust shutter frequency based on the frequency of light measured.

[Smart Illumination]

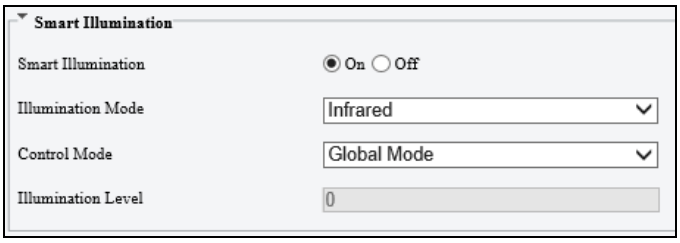

Figure 3-31

- **Smart Illumination:** Select **On** to adjust the IR illumination settings.
- **Illumination Mode:**
  - ⊙ **For regular models:** Set to **Infrared** by default.
  - ⊙ **For GV-BLFC5800 / EBFC5800:** Set to **White Light** by default.
  - ⊙ **For GV-TBL8804:** Refer to the table below to configure the settings.

	Illumination Mode	Action	
		Daytime	Nighttime
With AI functions disabled	Infrared	Day Mode enabled	Night Mode and IR light enabled.
	White Light	Day Mode enabled	Day Mode and White LED light enabled.
With AI functions enabled	Infrared	Day Mode enabled. White LED light flashes for 10 seconds upon an alarm trigger.	Night Mode and IR light enabled. White LED light flashes for 10 seconds upon an alarm trigger.
	White Light		Day Mode and White LED light enabled.
	Dual Light		Night Mode and IR light enabled. Switches to Day Mode and White LED light flashes for 10 seconds upon an alarm trigger.

Note:

1. AI functions refer to the smart settings, including Cross Line, Intrusion, Object Removed, Object Left Behind, Defocus, Scene Change, Enter Area, Leave Area, Face Detection, People Counting, Crowd Density Monitoring, and Human Body Detection. See details in *3.6.1 Smart Settings*.
2. White Light refers to Warm Light LED for GV-BLFC5800 / GV-EBFC5800 / GV-TBL8804.

- **Control Mode:**
  - ⊙ **Global Mode**: Adjust IR illumination and exposure to achieve balanced image effects. Some areas might be overexposed if you select this option. This option is recommended if monitored range and image brightness are your first priority.
  - ⊙ **Overexposure Restrain**: Adjust IR illumination and exposure to avoid regional overexposure. Some areas might be dark if you select this option. This option is recommended if clarity of the central part of the image and overexposure control are your first priority.
  - ⊙ **Manual / Custom Level:** Allow you to manually control the intensity of IR illumination.
- **Illumination Level:** When **Control Model** is set to **Manual** / **Custom Level,** you can set the intensity level of the IR light. The greater the value, the higher the intensity. 0 means that the IR light is turned off.
- **Near / Far Illumination Level:** For GV-TBL8804 only, when **Illumination Mode** is set to **Dual Light** and **Control Mode** to **Manual,** you can set the intensity level of the IR light respectively for wide-angle scene (near illumination level) and telephoto view (far illumination level).

[White Balance]

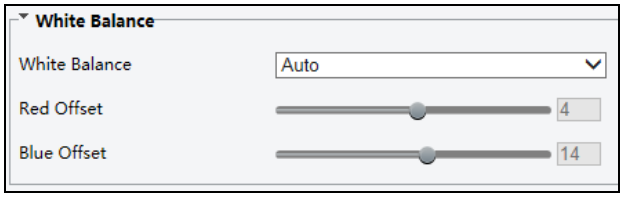

Figure 3-32

- **White Balance**: Adjust the red or blue offset of the image.
  - **Auto / Auto 2:** Adjust the red and blue offset automatically according to the light condition (the color tends to be blue). Select **Auto 2** if the images remain unnaturally red or blue.
  - **Outdoor:** It is recommended for outdoor scenes with a wide range of color temperature variation.
  - **Fine Tune:** Allow you to adjust the red and blue offset manually.
  - **Sodium Lamp:** Adjust the red and blue offset automatically according to the light condition (the color tends to be red).
  - **Locked:** Lock the current color temperature settings without adjustment.

[Advanced]

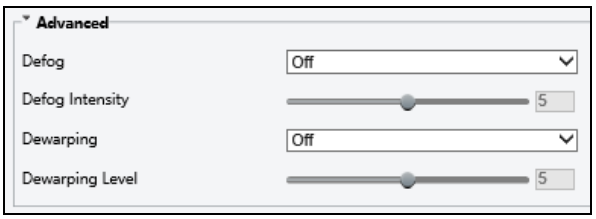

Figure 3-33

- **Defog**: Select **On** to activate the slider for adjusting the **defog intensity** of the image.
- **Dewarping**: Only for GV-ABL2703 series / 4703, GV-ADR2702 / 4702, GV-EBD8800 / 8813, GV-EBDP5800, GV-TBL2703 series / 4703 / 8804 / 8810, GV-TBLP5800, GV-TDR2702 series / 4702 series / 8805, and GV-TVD8810, select **On** to activate the slider for adjusting the **Dewarping Level** of the camera image.

[Engineering]

Click **Reset** to reset the focus of the camera. Note that this function is only applicable to the following models: **GV-BLFC5800, GV-EBD4704 / 4813, GV-EBFC5800, GV-TBL4705 / 4810, GV-TDR4704 / 4803, GV-TFD4800**, and **GV-TVD4810 / 4811**.

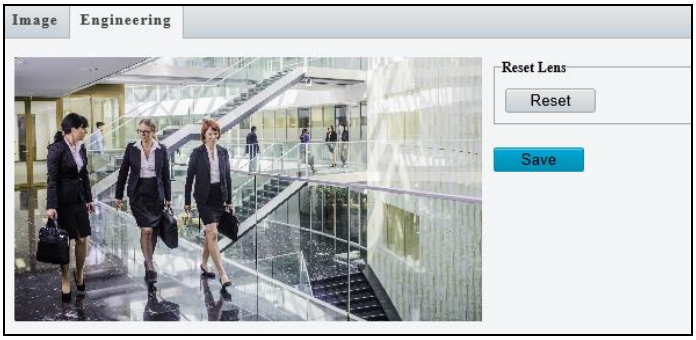

Figure 3-34

3.5.2 OSD

On Screen Display (OSD) is the text displayed on the screen of video images and may include the date and time and other customized contents.

Note **GV-ABL2703 series** / **4703** / **4711**, **GV-ADR2702** / **4702**, **GV-EBD2704 / 2705 / 4701 / 4704 / 4712 / 4813**, **GV-TBL2703 series** / **2705** / **2706 series** / **2718** / **4700** / **4703 / 4705 / 4711**, **GV-TDR2702 series** / **2704 series** / **2705 / 4702 series / 4703 series / 4704 series, GV-TFD4700,** and **GV-TVD2712 / 4700 / 4711** only support up to 4 OSD.

Note: Make sure to select the desired channel for configuration before proceeding with the followings for **GV-TMS8800**.

3.4.2.1 For all models except GV-EBD2702

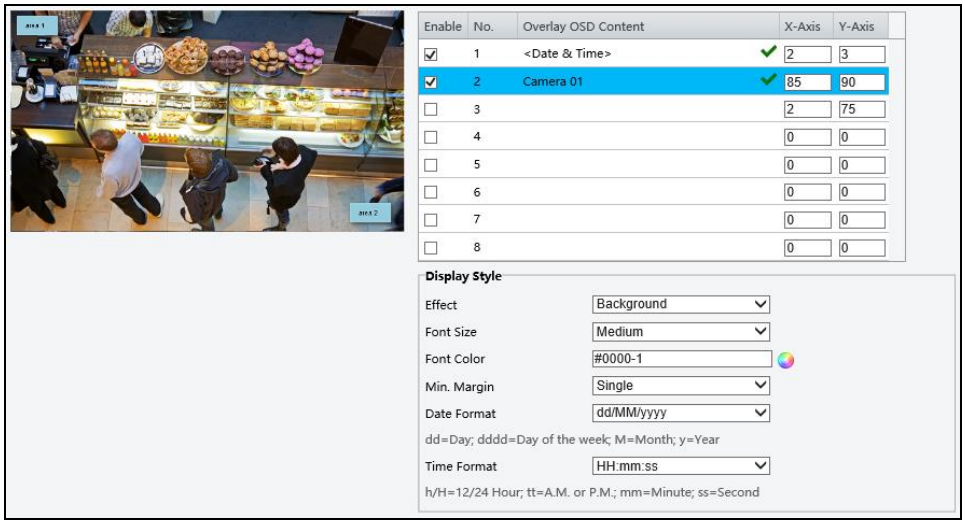

Figure 3-35

1. Enable a number to select an area #, and click **Overlay OSD Content** to select the content to display on the screen.
2. Adjust the position of the Area # boxes either by dragging them directly on the live view or by specifying the coordinates under **X-Axis** / **Y-Axis** column.
3. Under **Display Style**, customize the text style and date/time format and use **Min. Margin**, to adjust the minimum margin between the OSD and the image's border.

3.4.2.2 For GV-EBD2702

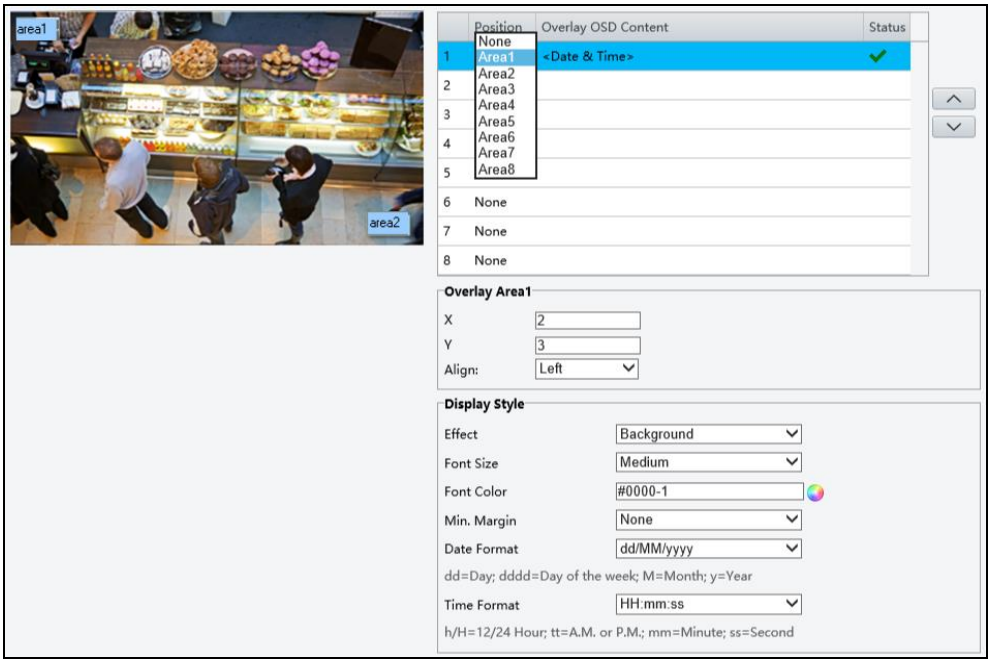

Figure 3-36

1. Click **Overlay OSD Content** to select the content or type a self-defined text to be displayed on the screen.
2. Click **Position** and select from Areas 1 to 8 to specify the position of the OSD on the image. If more than one OSD are specified to one Area #, they are displayed at the same position in numerical order, as accorded to the number column.
3. Click the arrow buttons ^ or v to adjust the order of the OSD displayed.
4. Adjust the position of the Area # boxes either by dragging them directly on the live view or by specifying the coordinates under **X-Axis** / **Y-Axis** column.
5. Under **Display Style**, customize the text style and date/time format and use **Min. Margin**, to adjust the minimum margin between the OSD and the image's border.

After you have set the position and OSD content, the ✔ symbol appears in the **Status** column, which means that the OSD is set successfully.

3.5.3 Privacy Mask

On certain occasions, you may need to set a mask area to block out parts of the camera image to protect privacy, for example, the keyboard of an ATM machine. When PTZ changes its position or zooms, the Privacy Mask will be adjusted accordingly to protect the area all along.

Note: Make sure to select the desired channel for configuration before proceeding with the following items for **GV-TMS8800**.

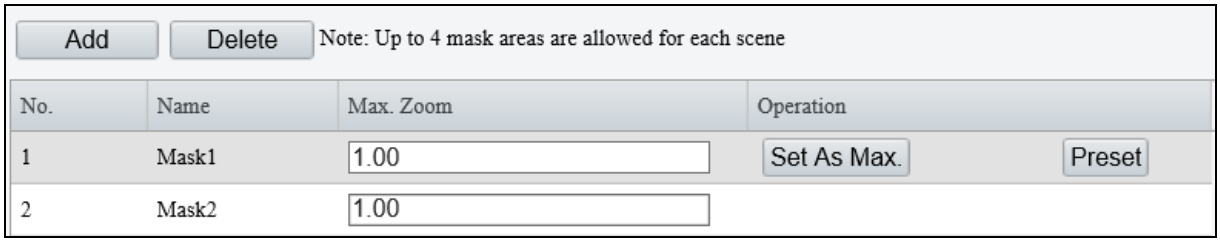

Figure 3-37

1. Click Add to place a privacy mask on the live view.
2. Drag the **Mask** box to the intended position and adjust the size of the box. Alternatively, you can also use the mouse to draw a box on the area you want to mask.
3. Repeat steps 1 and 2 to add more masks.
4. To delete a mask, select the desired mask and click Delete.

Note:

1. The max. number of mask areas can be defined:
   - Up to four mask areas for GV-ABL2703 series / 4703 / 4711, GV-ADR2702 / 4702, GV-BLFC5800, GV-EBD2705 / 4701 / 4712 / 4813, GV-EBDP5800 / 8800, GV-EBFC5800, GV-TBL2703 series / 2706 series / 2718 / 4700 / 4703 / 4711 / 4810 / 8710, GV-TBLP5800 / 8800, GV-TDR2702 series / 2705 / 4702 series / 4703 series / 4803 series, GV-TFD4700 / 4800, GV-TMS8800, GV-TVD2712 / 4700 / 4711 / 4810 / 4811,
   - Up to twenty-four mask areas for GV-PTZ5810-IR
   - Up to eight mask areas for all other models.
2. **Max. Zoom** and **Operation** are only applicable to **GV-PTZ5810-IR**.

3.6 Intelligent

Under Intelligent, users can set the camera to detect for a number of video-analytic events, which can be used to send FTP and/or e-mail alerts, based on the parameters set. Note this function is NOT supported by GV-ABL2701 series / 2703 series / 4701 series / 4703, GV-ADR2701 / 2702 / 4701 / 4702, GV-TBL2703 series / 4703, GV-TDR2702 / 4702, and GV-FER5702.

3.6.1 Smart Settings

Smart Settings allow alerts to be sent to FTP or designated e-mail address(es) upon **Cross Line**, **Intrusion**, **Object Removed**, **Object Left Behind**, **Defocus**, **Scene Change**, **Enter Area, Leave Area**, **Face Detection, People Counting, Crowd Density Monitoring** or **Human Body Detection** events.

Note:

1. In order for event alerts to work, you also need to configure the necessary settings of FTP, e-mail server or snapshots, see *3.8.2 FTP*, *3.2.5 E-mail* and *3.3.2 Snapshot*, respectively.
2. For certain models, to display the detection lines and/or areas on the live view, you need to enable **Untriggered Target** as mentioned in *3.1.2 Local Parameters*.
3. GV-ABL4711, GV-EBD4701 / 4712, GV-TBL4700 / 4711, GV-TDR4703 series, GV-TFD4700, and GV-TVD4700 / 4711 only support two smart settings: **Intrusion** and **Human Body Detection**.
4. GV-EBD2704 / 2705 / 4704, GV-TBL2705 / 2706 series / 2718 / 4705, GV-TDR2704 series / 2705 / 4704 series, and GV-TVD2712 only support two smart settings: **Cross Line** and **Intrusion**.
5. GV-BLFC5800, GV-EBD4813 / 8800 / 8813, GV-EBFC5800, GV-TBL4810 / 4807 / 8804 / 8810, GV-TDR4803 / 8805, GV-TFD4800, GV-TVD4810 / 4811 / 8810, and GV-PTZ5810-IR support the following smart settings: **Cross Line, Intrusion, Enter Area, Leave Area, Face Detection, People Counting**, and **Crowd Density Monitoring**.
6. GV-EBDP5800 / 8800 and GV-TBLP5800 / 8800 only support the following smart settings: **Cross Line**, **Enter Area**, **Leave Area**, and **Intrusion**.
7. For GV-TMS8800 only, smart settings can be set separately for each channel. See the table below for the smart settings supported by each channel:

Channel	Smart Setting
Channel 1	Cross Line, Intrusion, Enter Area, Leave Area, Face Detection, People Counting, Crowd Density Monitoring
Channel 2	Cross Line, Intrusion, Enter Area, Leave Area

8. Smart Settings will not work if **Image Rotation** is set to **90° Clockwise** or **90° Anti-clockwise** under the Image Enhancement settings in *3.5.1 Image*.

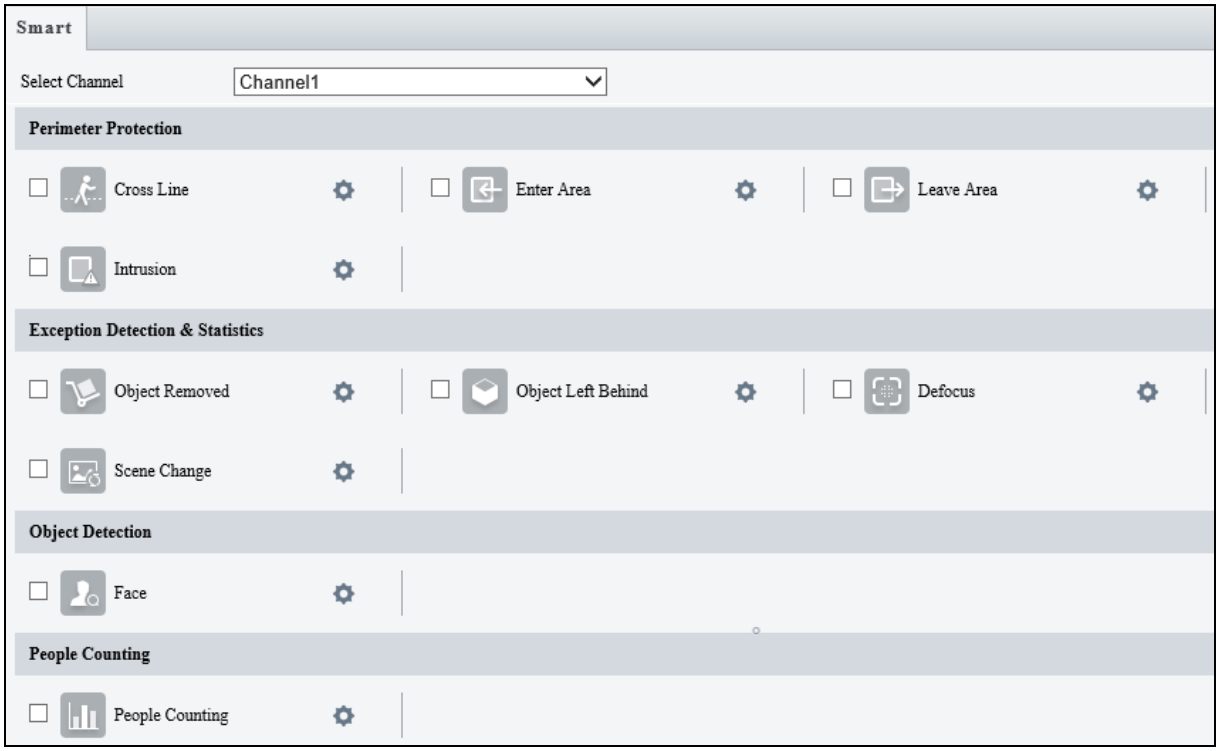
Smart
Select Channel
Channel1
Perimeter Protection
Cross Line
Enter Area
Leave Area
Intrusion
Exception Detection & Statistics
Object Removed
Object Left Behind
Defocus
Scene Change
Object Detection
Face
People Counting
People Counting

Figure 3-38

3.6.1.1 Cross Line

Cross line detection generates an alarm when an object moves past the detection threshold in the direction you defined. Up to 4 detection lines can be added. Note that when adding multiple detection lines, make sure they do **NOT** intersect as it may affect the detection results. Select the checkbox next to **Cross Line** to enable and click ⚙ to configure.

For AI models:

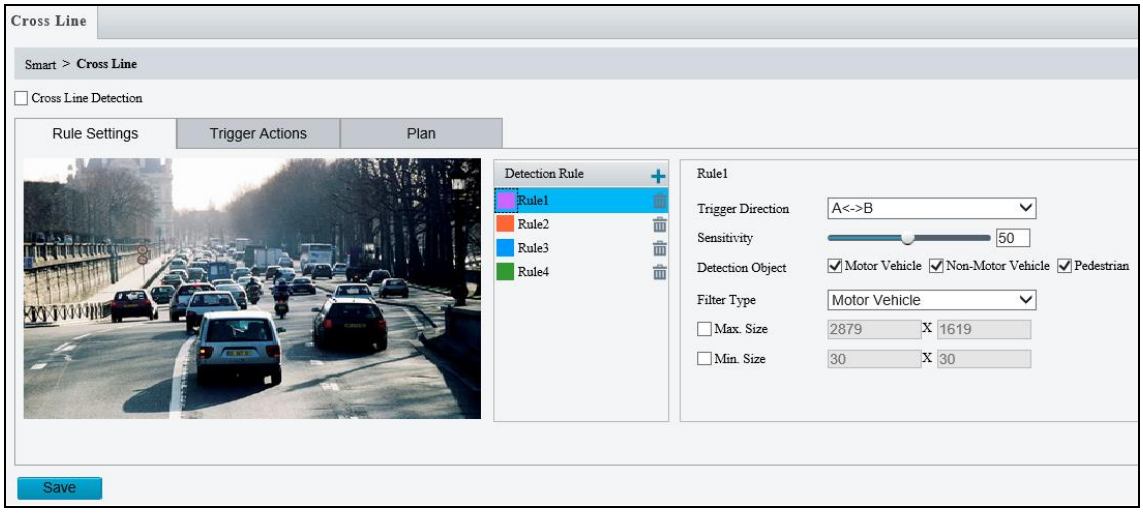

Figure 3-39

1. Click ＋ to add a detection line. Repeat to add another detection line (maximum of **4**).
2. Drag the ends of the detection line to the intended position to mark the detection boundary.
3. Select the **Trigger Direction**, which defines the direction to trigger an alarm. For example, if you choose **A -> B**, people moving from direction A to B will trigger an alarm.
4. For **Sensitivity**, drag the slider to adjust the detection sensitivity.
5. For **Detection Object**, select the type of object you want to take a snapshot of.
6. For **Filter Type**, select the type of object you want to define and its minimum or maximum size for detection. Once selected, click **Max. Size** and/or **Min. Size**, drag the nodes of the size area to adjust and the system will detect objects within that size range. Repeat this step to define the size range for another type of object.
7. For **Trigger Actions** and **Plan**, follow *Step 6 ~ 7* below.

Note: Motor Vehicle includes cars, trucks, and buses. Non-Motor Vehicle includes bicycles and motorcycles.

For non-AI models:

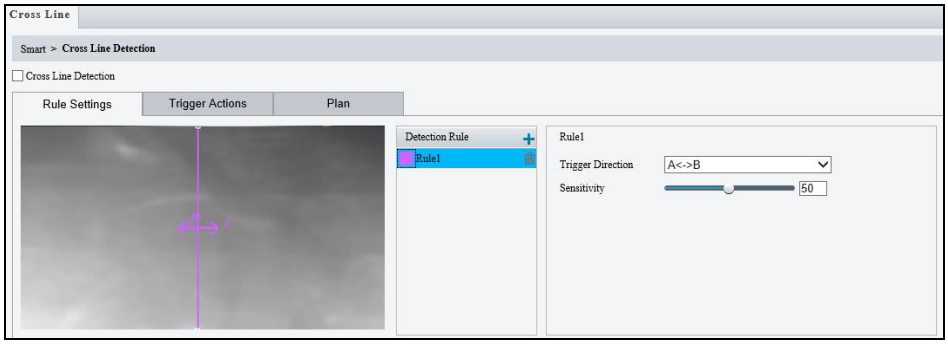

Figure 3-40

1. Based on your installation environment, select the **Detection Scene** between outdoor and indoor (see *Detection Parameters* in *3.6.2 Advanced Settings*). By default, **Outdoor** is selected.
2. Once enabled, select Rule Settings > click + to add a detection line. Repeat to add another detection line.
3. Drag the ends of the detection line to the intended position to mark the detection boundary.
4. Select the **Trigger Direction**, which will define the direction to trigger an alarm. For example, if you choose **A -> B**, people moving from direction A to B will trigger an alarm.
5. Move the slider to adjust the detection **Sensitivity**.
6. Set up **Trigger Actions:**

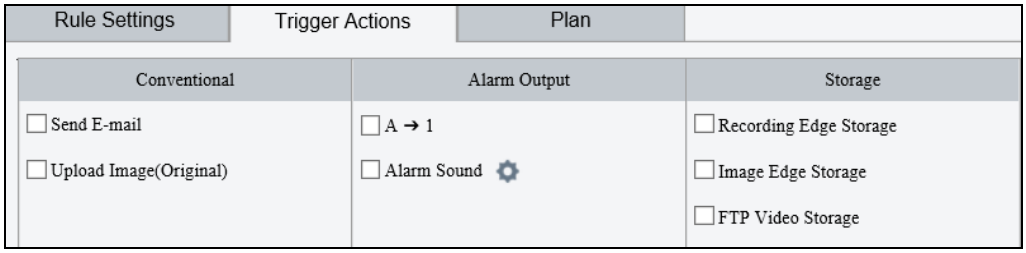

Figure 3-41

A. Select **Upload to FTP** / **Send E-mail** / **Upload Image (Original) / Attribute Collection** under **Trigger Actions** to automatically upload snapshots to the specified FTP server, send snapshots to the specified e-mail address upon the video analytic events, and/or upload object attribute information to the server.

B. Select **A -> 1** / **Alarm Sound** to trigger an output device upon cross line detection. Depending on your model, select **A -> 1** or **Alarm Sound** to trigger an output device upon people / vehicle / non-motor vehicle detection.

C. Optionally click ⚙ next to **Alarm Sound** to set the desired **Day, Start Time, End Time, Alarm Audio**, and **Number of Repeat Times**. You can set up to four periods for each time, and the time periods cannot overlap.

D. Select **Recording Edge Storage**, **Image Edge Storage,** or **FTP Video Storage**. Snapshots captured or videos recorded will automatically be stored in the selected storages.

7. Optionally select **Enable Plan** under **Plan** to set the start and end times during which the video analytic monitoring is enabled. You can directly drag the mouse to draw a plan or click **Edit** to edit time periods in the table. You can set up to four periods for each day, and the time periods cannot overlap. The camera reports alarms during the specified period only.

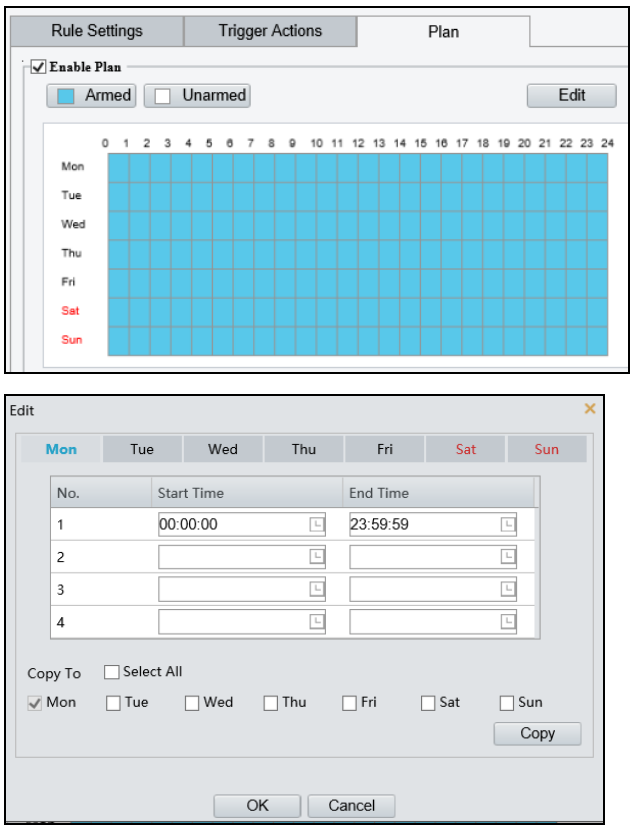

Figure 3-42

Note:

1. Certain models may only support uploading snapshots to an FTP server and output trigger for **Trigger Actions**.
2. Alarm Sound is only applicable to GV-PTZ5810-IR / GV-TBL8804 and Alarm Light is only applicable to GV-BLFC5800 / EBFC5800 / TBL8804. See details in *3.3.3 Audio* for Alarm Sound and *3.5.1 Image (Smart Illumination)* for Alarm Light.
3. Attribute Collection is only applicable to certain models. See *3.6.3 Attribute Collection* for details.

Also see *Appendix J. Installation Guidelines for Perimeter Protection.*

3.6.1.2 Intrusion

With Intrusion Detection, an alarm is generated when an object enters the boundaries of the detection area. Up to 4 detection areas can be added.

Note that it is recommended **NOT** to overlap the detection areas when adding multiple detection areas. Select the checkbox next to **Intrusion** to enable and click ⚙ to configure.

For AI models:

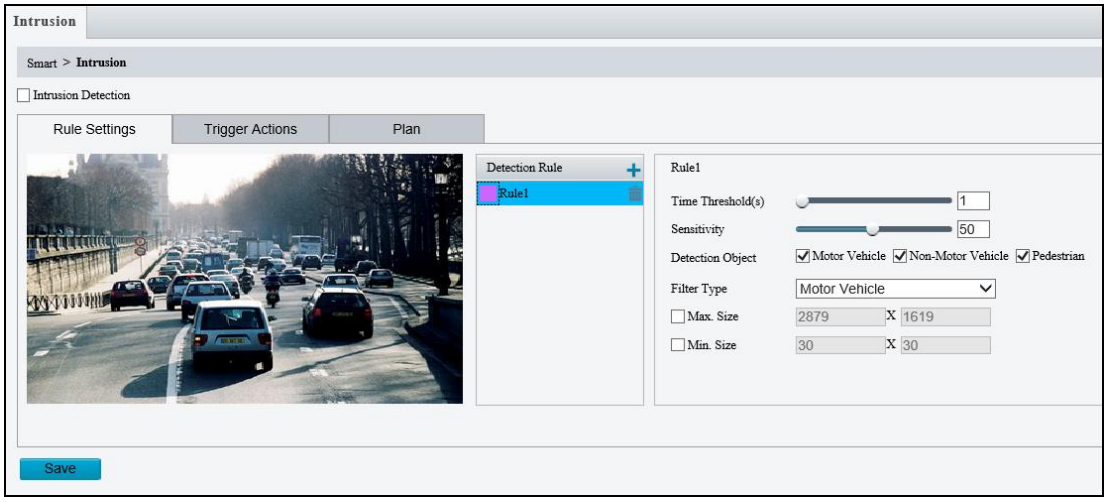

Figure 3-43

1. Click ＋ to mark the live view with a detection area. Repeat this step to add another detection area (maximum of **4**).
2. Drag the nodes of the detection area to mark the boundary for detection.
3. You can use the following functions to reduce false alarm.
   - **Time Threshold:** The minimum period of time for an object to stay within the detection area before an alarm is triggered.
   - **Sensitivity:** Move the slider to adjust the detection sensitivity.
4. For **Detection Object**, select the type of object you want to take a snapshot of.
5. For **Filter Type**, select the type of object you want to define and its minimum or maximum size for detection. Once selected, click **Max. Size** and/or **Min. Size**, drag the nodes of the size area to adjust and the system will detect objects within that size range. Repeat this step to define the size range for another type of object.
6. For **Trigger Actions** and **Plan**, follow *Step 6 ~7* at the bottom of *3.6.1.1 Cross Line*.

Note:

1. Certain models may only support uploading snapshots to an FTP server and output trigger for Trigger Actions.
2. Motor Vehicle includes cars, trucks, and buses. Non-Motor Vehicle includes bicycles and motorcycles.
3. Alarm Sound is only applicable to GV-PTZ5810-IR / GV-TBL8804 and Alarm Light is only applicable to GV-BLFC5800 / EBFC5800 / TBL8804. See details in *3.3.3 Audio* for Alarm Sound and *3.5.1 Image (Smart Illumination)* for Alarm Light.

For non-AI models:

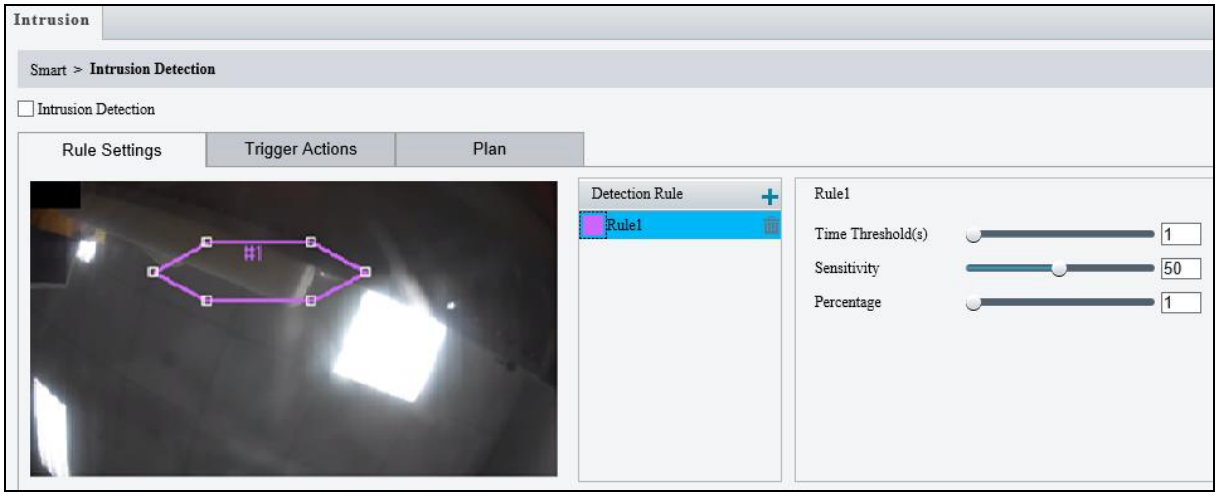

Figure 3-44

1. Based on your installation environment, select the **Detection Scene** between outdoor and indoor (see *Detection Parameters* in *3.6.2 Advanced Settings*). By default, **Outdoor** is selected.
2. Once enabled, click + to mark the live view with a detection area. Repeat this step to add another detection area.
3. Drag the nodes of the detection area to mark the boundary for detection.
4. You can use the following functions to reduce false alarm.
   - **Time Threshold:** The minimum period of time for an object to stay within the detection area before an alarm is triggered.
   - **Sensitivity:** Move the slider to adjust the detection sensitivity.
   - **Percentage:** Type the minimum size of the object compared to the detection area for the object to be detected.

5. For **Trigger Actions** and **Plan**, follow *Step 6 ~ 7* at the bottom of *3.6.1.1 Cross Line*.

Also see *Appendix J. Installation Guidelines for Perimeter Protection.*

3.6.1.3 Object Removed

Object Removed can generate an alarm when an object is removed from the specified area. Up to 4 detection areas can be added.

Note that it is recommended **NOT** to overlap the detection areas when adding multiple detection areas. Select the checkbox next to **Object Removed** to enable and click to configure.

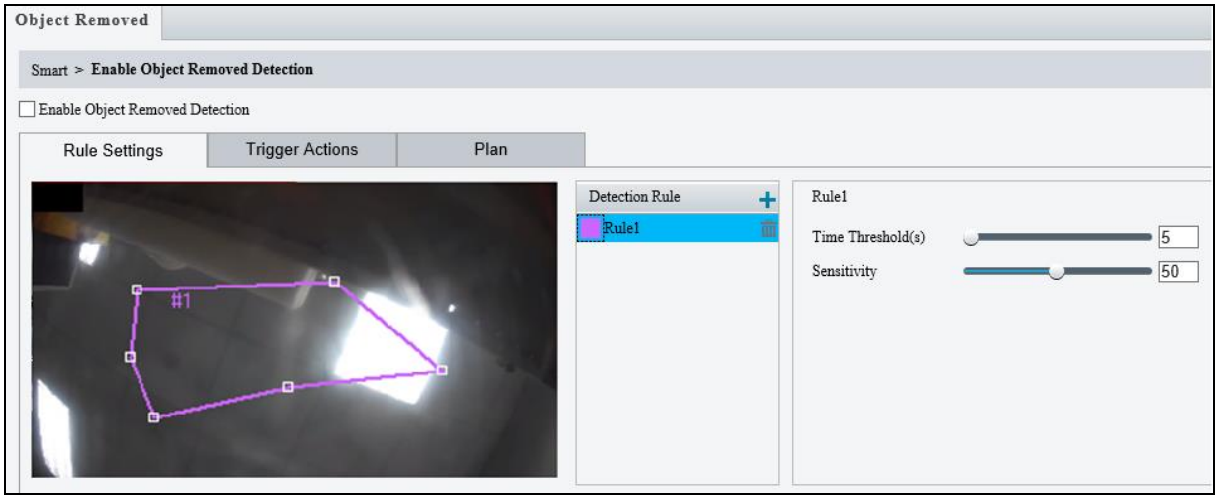

Figure 3-45

1. Once enabled, click to mark the live view with a detection area. Repeat this step to add another detection area.
2. Drag the nodes of the detection area to mark the boundary for detection.
3. You can use the following functions to reduce false alarm.
   - **Time Threshold:** The minimum period for an object to be absent from the detection area before an alarm is triggered.
   - **Sensitivity:** Move the slider to adjust the detection.
4. For **Trigger Actions** and **Plan**, follow *Step 6 ~ 7* at the bottom of *3.6.1.1 Cross Line*.

3.6.1.4 Object Left Behind

With Object Left Behind, an alarm can be generated when an object which remained in the detection area for the specified period of time, leaves the specified region. Up to 4 detection areas can be added.

Note that it is recommended **NOT** to overlap the detection areas when adding multiple detection areas. Select the checkbox next to **Object Left Behind** to enable and click ⚙ to configure.

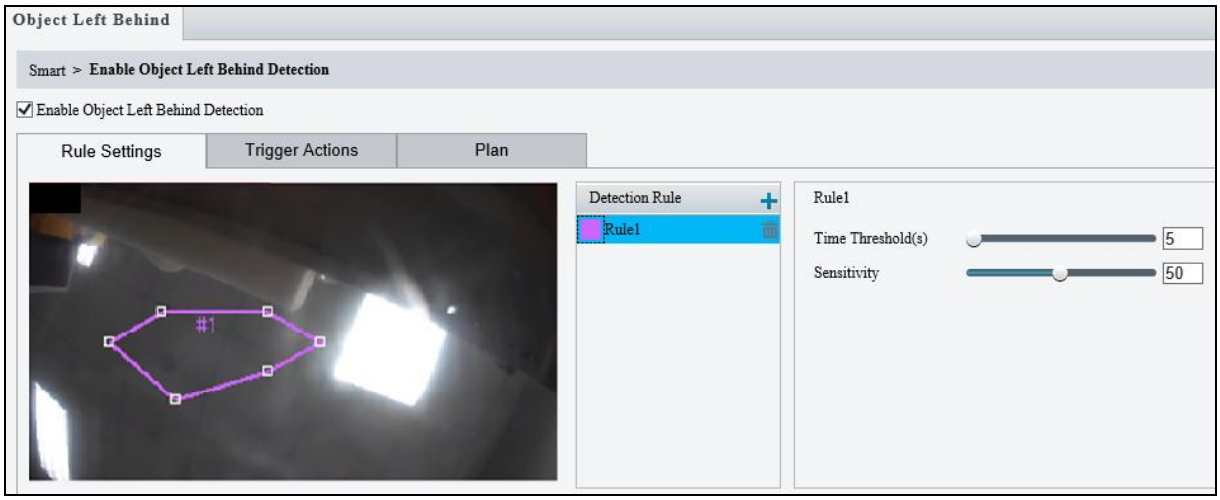

Figure 3-46

1. Once enabled, click ➕ to mark the live view with a detection area. Repeat this step to add another detection area.
2. Drag the nodes of the detection area to mark the boundary for detection.
3. You can use the following functions to reduce false alarm.
   - **Time Threshold:** The minimum period of time for an object to stay within the detection area for an alarm to trigger.
   - **Sensitivity:** Move the slider to adjust the detection sensitivity.
4. For **Trigger Actions** and **Plan**, follow *Step 6 ~ 7* at the bottom of *3.6.1.1 Cross Line*.

3.6.1.5 Defocus

Defocus generates an alarm to be sent through e-mail whenever the camera's image is out of focus. Select the checkbox next to **Defocus** to enable and click ⚙ to configure.

`

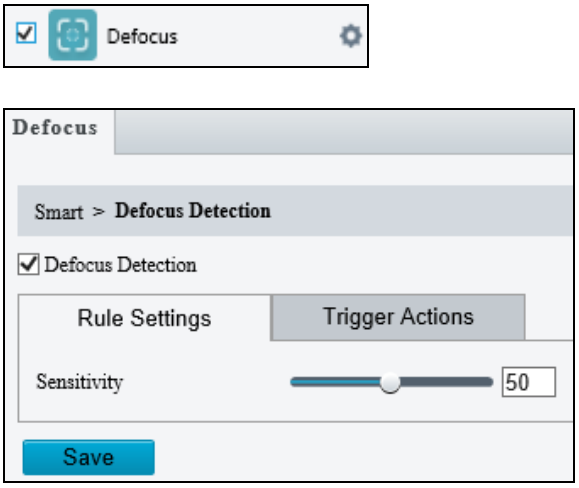

Figure 3-47

Once enabled, drag the slider to adjust the detection **Sensitivity**. For **Trigger Actions**, follow *Step 6* at the bottom of *3.6.1.1 Cross Line.*

3.6.1.6 Scene Change

Scene Change is able to generate an alarm whenever there is a drastic scene change to the image of the camera. Select the checkbox next to **Scene Change** to enable and click ⚙ to configure.

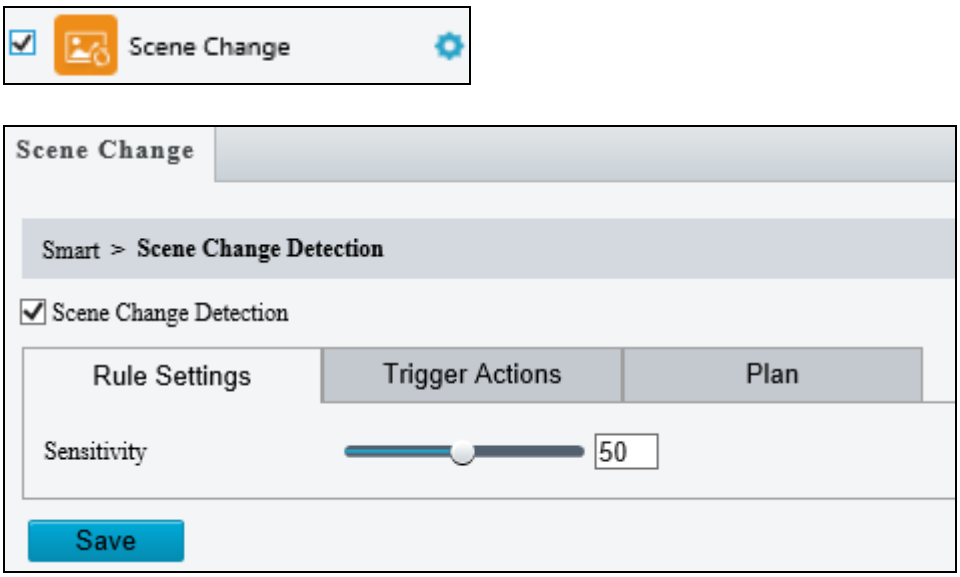

Figure 3-48

Once enabled, drag the slider to adjust the detection **Sensitivity**. For Trigger Actions and Plans, follow *Step 6 ~ 7* at the bottom of *3.6.1.1 Cross Line*.

3.6.1.7 Face Detection

The Face function can detect for and capture face(s) in a specified area and send to an FTP server. Select the checkbox next to **Face** to enable and click ⚙ to configure.

For non-AI models:

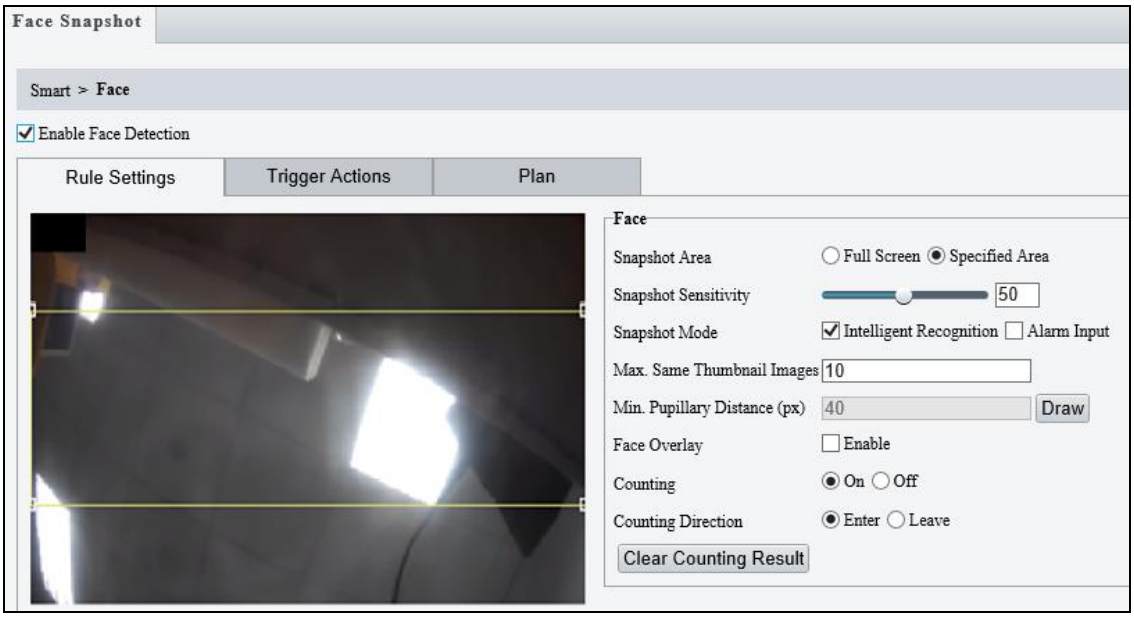

Figure 3-49

1. Once enabled, define the detection area, either by drawing a desired area on the image or select **Full Screen** next to **Specified Area** to set the entire image as detection area.
2. Configure the following functions as needed:
   - **Snapshot Sensitivity:** Drag the slider to adjust the detection sensitivity. By default, the value is set to 50. When the sensitivity is increased, the detection rate increases but so does the false detection rate, and vice versa.
   - **Snapshot Mode:** Select **Intelligent Recognition** to set the maximum of repeated face snapshots (1~30) for **Max. Same Thumbnail Image**.
   - **Min. Pupillary Distance (px):** Click **Draw** and draw in the live view window. Set according to camera resolutions. The min. pupillary distance should be 1/2 of face pixel.
   - **Face Overlay:** Enable to include the camera's text overlay on the snapshot(s) captured.

3. Under **Trigger Actions**, select **Upload Image (Original)** to upload a snapshot of the entire image and a snapshot of the face detected upon face detection. Select **Upload Image (Target)** to upload only the snapshot of the face detected.
4. For **Plan**, follow *Step 7* at the bottom of *3.6.1.1 Cross Line*.

Note: The **Counting** and **Counting Direction** features are currently nonfunctional.

For AI models:

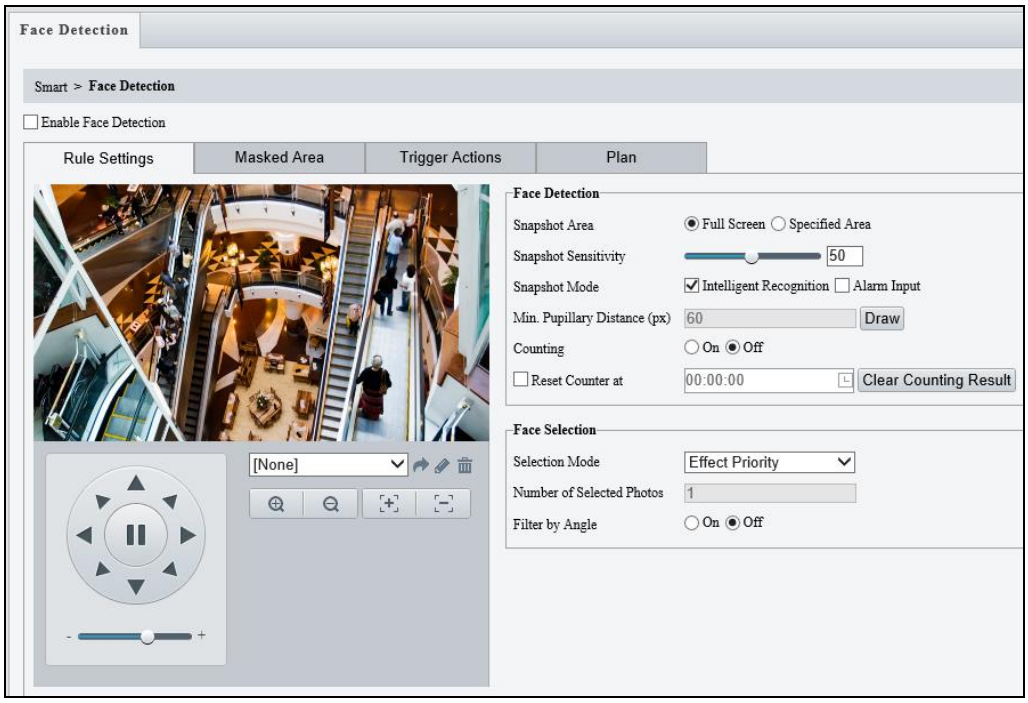

Figure 3-50

1. Once enabled, define the detection area, either by selecting **Specified Area** and drawing a desired area on the image, or select **Full Screen** to set the entire image as detection area.
2. Configure the following functions as needed:

   [Face Detection]

   - **Snapshot Sensitivity**: Drag the slider to adjust the detection sensitivity.
   - **Snapshot Mode**: Select **Intelligent Recognition** for the camera to detect and take snapshots of the object automatically.
   - **Min. Pupillary Distance (px)**: Click Draw and draw in the live view window.
   - **Counting:** To count the number of people entering / exiting in the detection area, enable this function. To display the counting results in the live view window, select **People Counting** in OSD settings. Refer to *3.5.2 OSD* for details.

[Face Selection]

- **Selection Mode:** Select **Effect Priority** for the best image quality of the captured snapshots, **Speed Priority** for optimal snapshots from the moment of detection until the specified timeout is up, and **Periodic Selection** for a snapshot captured in every selection period. For example, if **Periodic Selection** is set to 500 millisecond (ms), the camera selects a face snapshot every 500 ms.)
- **Number of Selected Photos:** Set 1 ~ 3 selected photos for different selection modes.
- **Filter by Angle:** Enable this function to set the desired face angle for detection.

3. Under **Trigger Actions**, select **Upload Image (Original)** to upload a snapshot of the entire image and a snapshot of the face detected upon face detection. Select **Upload Image (Target)** to upload only the snapshot of the face detected.
4. For **Plan**, follow *Step 7* at the bottom of *3.6.1.1 Cross Line*.

Local Snapshot

Click the Start Capture button (see figure below) on the Live View page to start taking local snapshots.

When enabled, captured faces and people will display in real time on the right side of the Live View page.

Note: If green detection boxes are displayed but local snapshots are not, re-install the plugin, disable the firewall on your computer, and disable the protected mode for all the zones in your IE (Internet options > Security).

Also see *Appendix M. Installation Guidelines for Face Detection, and Appendix N. Installation Guidelines for Face Detection (Non-AI).*

3.6.1.8 People Counting

The People Counting function can count the number of person(s) entering and leaving the vicinity, which is useful at an entrance/exit setting. Select the checkbox next to **People Counting** to enable and click ⚙ to configure.

For non-AI models:

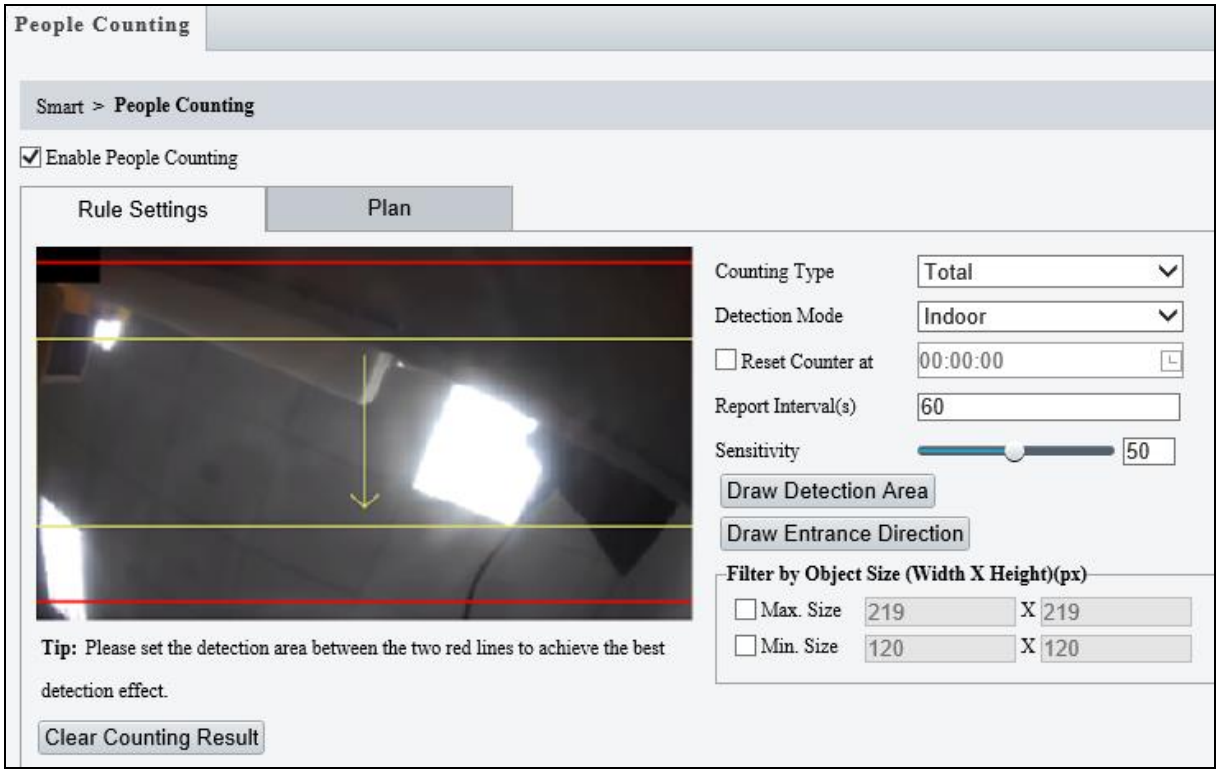

Figure 3-51

1. Once enabled, draw a detection area and entrance direction on the image by clicking **Draw Detection Area** and **Draw Entrance Direction**, respectively.
2. Select the desired **Counting Type**, from Total, People Entered or People Left.
3. Select a **Detection Mode**, between Indoor and Outdoor, depending on your environment.
4. Under **Filter by Object Size**, set the **Max.** and **Min. Size** of the objects to be counted.
5. Select **Reset Counter at** to set a time within a day when to reset the counter.
6. Adjust the detection sensitivity by dragging the **Sensitivity** slider.
7. For **Plan**, follow *Step 7* at the bottom of *3.6.1.1 Cross Line*.

For AI models:

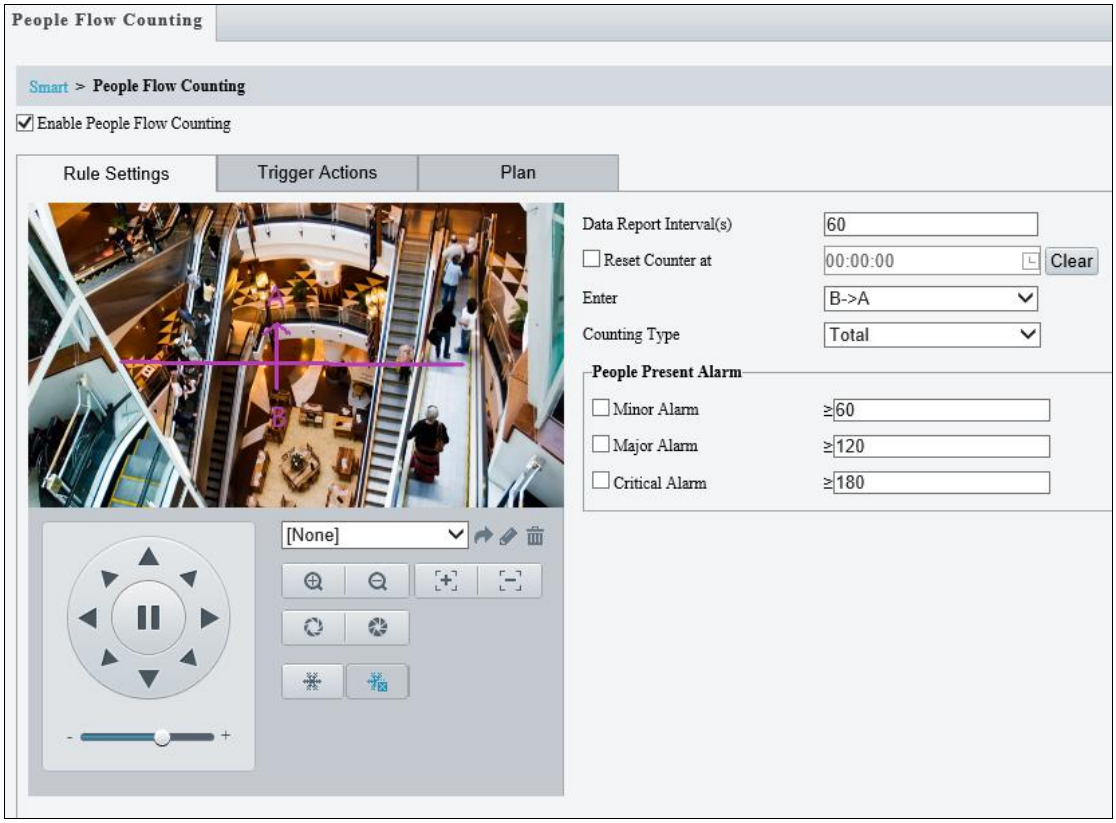

Figure 3-52

1. Once enabled, draw a detection line and define the entrance direction. Select the entrance direction from the **Enter** drop-down list.
2. Select the desired **Counting Type**, from **Total**, **People Entered** or **People Exited**. When any of the People Present Alarms is enabled, this function will not be available.
3. Under **People Present Alarm**, set the **Minor Alarm, Major Alarm, or Critical Alarm**. When the number of people present reaches a set threshold, an alarm will be triggered.
4. Select **Reset Counter at** to set a time within a day when to reset the counter.
5. For **Trigger Actions**, select to edit the desired trigger actions under each alarm. See *Step 6* at the bottom of *3.6.1.1 Cross Line* for details.
6. For **Plan**, follow *Step 7* at the bottom of *3.6.1.1 Cross Line*.

Also see *Appendix K. Installation Guidelines for People Flow Counting,* and *Appendix O. Installation Guidelines for People Counting (Non-AI).*

3.6.1.9 Human Body Detection

Human Body Detection is used to generate an alarm whenever a human figure appears in the specified area. Note this function is only applicable to **GV-ABL4711, GV-EBD4701 / 4712**, **GV-TBL4700 / 4711, GV-TDR4703 series, GV-TFD4700, and GV-TVD4700 / 4711**.

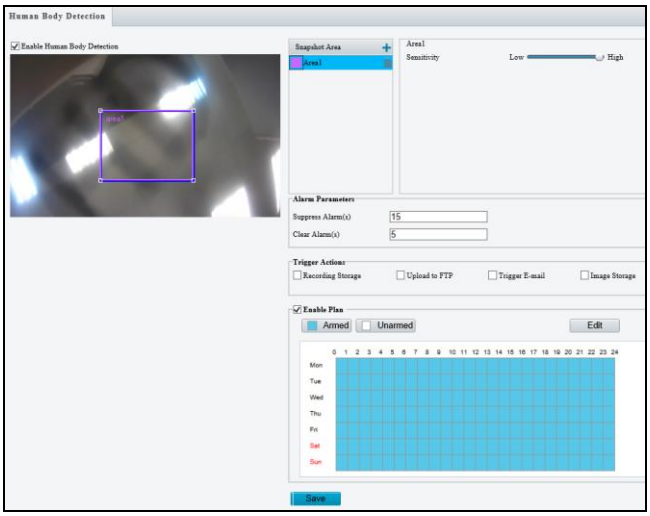

Figure 3-53

1. In the **Snapshot Area**, click to add a new detection area.
2. Click and drag the detection area to a desired location.
3. Adjust the detection sensitivity by dragging the **Sensitivity** slider.
4. Set up **Alarm Parameters**.
   - **Suppress alarm**: After a detection is triggered, the detection will not be reported within the set time.
   - **Clear alarm**: After a detection is triggered,
     - If the detection is not triggered within the set time, the detection will be cleared and the detection can be reported again.
     - If the detection is triggered within the set time, the detection will not be cleared until the suppress alarm time expires. Then the detection can be reported again.
5. Set up **Trigger Actions**.
   - **Upload to FTP** and **Trigger E-mail**: Automatically upload snapshots captured to the specified FTP server and/or send snapshots to the specified e-mail address.
   - **Recording Storage** and **Image Storage**: Automatically save videos and/or snapshots captured to the selected storage(s).
6. For **Enable Plan**, follow Step 7 at the bottom of *3.6.1.1 Cross Line*.

3.6.1.10 Enter Area / Leave Area

With Enter Area / Leave Area, an alarm is generated when a person or vehicle enters / leaves the boundaries of the detection area.

It is **NOT** recommended to overlap the detection areas when adding multiple detection areas.

Select the checkbox next to **Enter Area** or **Leave Area** to enable and click to configure.

Here we use **Enter Area** as an example.

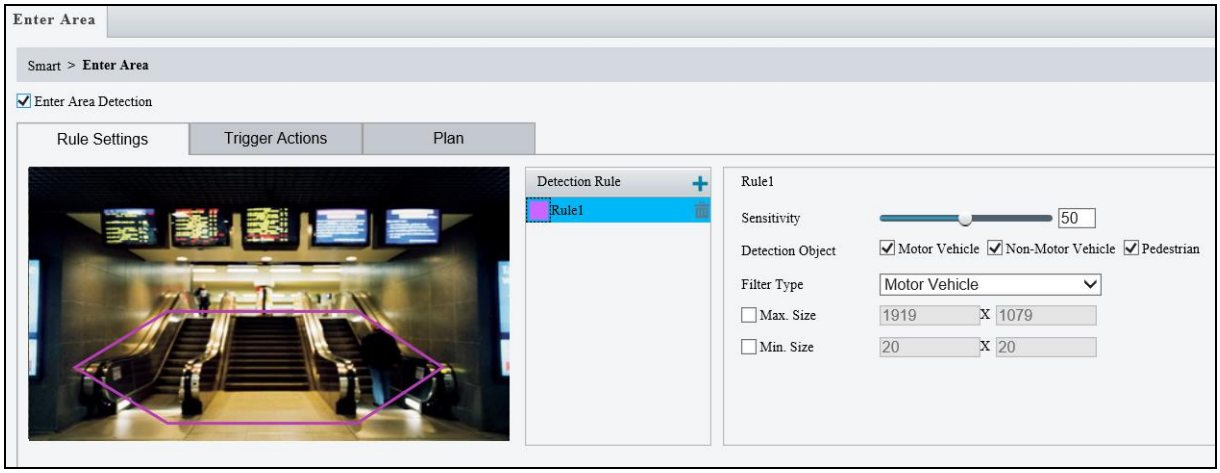

Figure 3-54

1. Click to mark the live view with a detection area. Repeat this step to add another detection area (maximum of **4**).
2. Drag the nodes of the detection area to mark the boundary for detection.
3. For **Sensitivity**, drag the slider to adjust the detection sensitivity.
4. For **Detection Object**, select the type of object to detect when it enters / leaves area.
5. For **Filter Type**, select the type of object you want to define and its minimum or maximum size for detection. Once selected, click **Max. Size** and/or **Min. Size**, drag the nodes of the size area to adjust and the system will detect objects within that size range. Repeat this step to define the size range for another type of object.

6. Under **Trigger Actions**, select **Upload Image (Original)** to automatically upload snapshots to the specified FTP server. Depending on your model, select **A -> 1**, **Alarm Sound**, or **Alarm Light** to trigger an output device upon people / vehicle / non-motor vehicle detection.
   - Optionally click ⚙ next to **Alarm Sound** to set the desired **Day**, **Start Time, End Time, Alarm Audio**, and **Number of Repeat Times**. You can set up to four periods for each time, and the time periods cannot overlap.
7. For **Plan**, follow *Step 7* at the bottom of *3.6.1.1 Cross Line*.

Note:

1. Certain models may only support uploading snapshots to an FTP server and output trigger for Trigger Actions.
2. Motor Vehicle includes cars, trucks, and buses. Non-Motor Vehicle includes bicycles and motorcycles.
3. Alarm Sound is only applicable to GV-PTZ5810-IR / GV-TBL8804 and Alarm Light is only applicable to GV-BLFC5800 / EBFC5800 / TBL8804. See details in *3.3.3 Audio* for Alarm Sound and *3.5.1 Image (Smart Illumination)* for Alarm Light.

Also see *Appendix J. Installation Guidelines for Perimeter Protection.*

3.6.1.11 Crowd Density Monitoring

With Crowd Density Monitoring, an alarm is triggered when the number of people in a specified area exceeds the defined alarm threshold.

Select the checkbox next to **Crowd Density Monitoring** to enable and click ⚙ to configure.

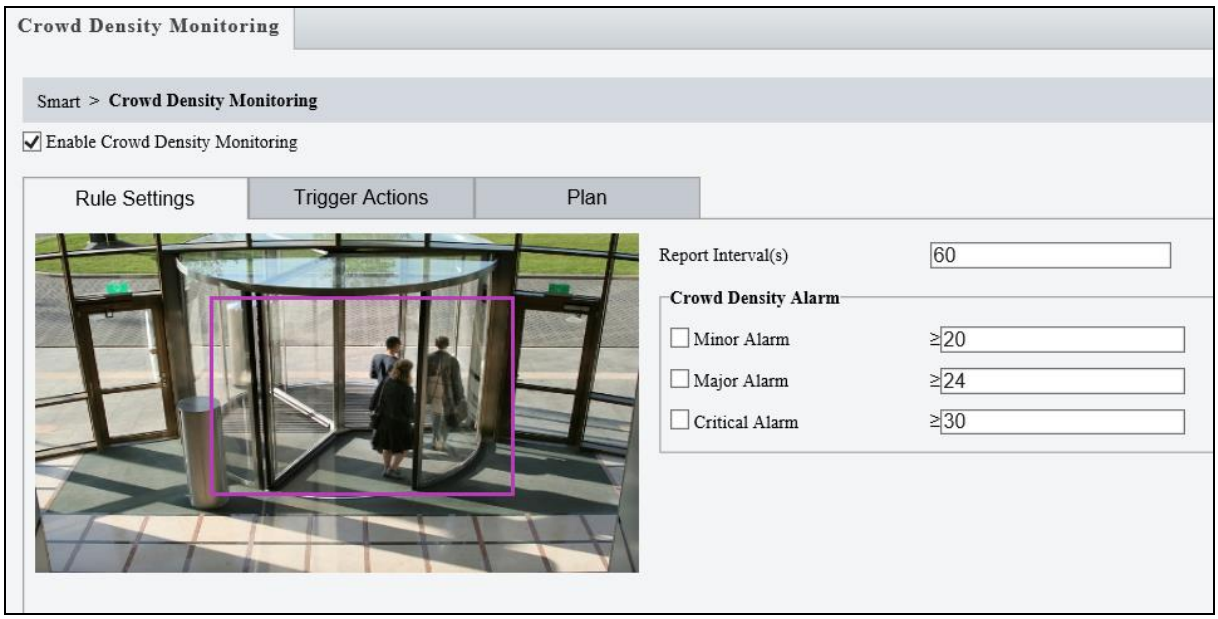

Figure 3-55

1. Once enabled, define the detection area on the live view.
2. For **Report Interval(s)**, set the time interval (in seconds) for reporting crowd density data.
3. Under **Crowd Density Alarm**, set the alarm threshold for **Minor Alarm, Major Alarm,** and **Critical Alarm.** The number of people set for **Critical Alarm** accounts for the largest and **Minor Alarm** the smallest. The value ranges from 1 to 40, and each alarm will be triggered when the number of people reaches the set threshold.
4. Under **Trigger Actions**, select ✎ on the desired alarm. See details in *Step 6* at the bottom of *3.6.1.1 Cross Line*.
5. For **Plan**, follow *Step 7 at the bottom of 3.6.1.1 Cross Line*.

Also see *Appendix L. Installation Guidelines for Crowd Density Monitoring.*

3.6.2 Advanced Settings

This section allows you to configure the clarity of the snapshots captured by face detection events and choose the detection modes used for all video-analytic events.

Photo Parameters

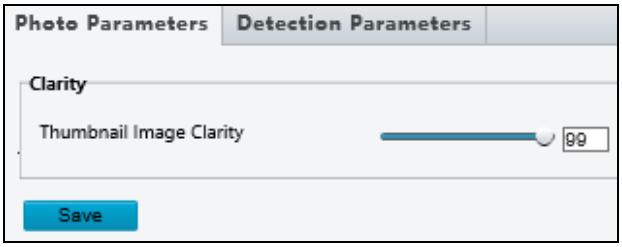

Figure 3-56

- **Thumbnail Image Clarity:** Drag the slider to adjust the clarity of the snapshots captured by face detection events.

Detection Parameters

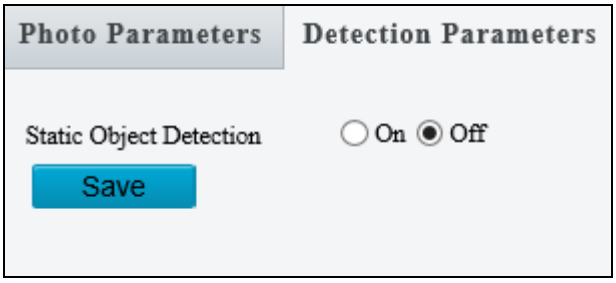

Figure 3-57

- **Static Object Detection:** Select **On** for the camera to detect both static and moving targets and **Off** to detect moving targets only.

3.6.3 Attribute Collection

You can configure attribute collection rules to collect desired attribute information of the monitored objects.

Note: This function is only applicable to GV-EBDP5800 / 8800 and TBLP5800 / 8800.

Collecting Attributes

By configuring attribute collection rules, users are allowed to collect desired attribute information of the monitored objects.

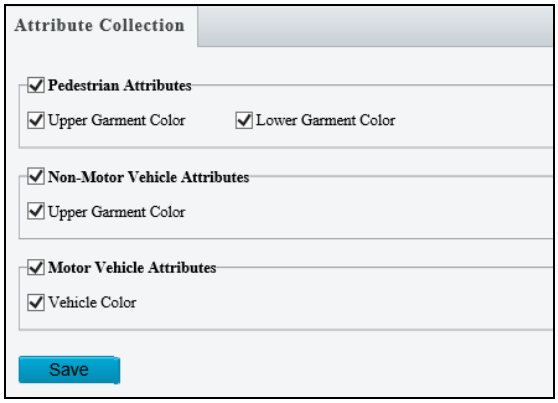

Figure 3-58

Select the desired attributes to be collected and click **Save**.

3.7 Events

You can set the camera to generate an alarm upon motion detection, tampering alarm, audio detection and one-key disarming.

3.7.1 Motion Detection

Motion detection is used to generate an alarm whenever movement occurs in the specified area.

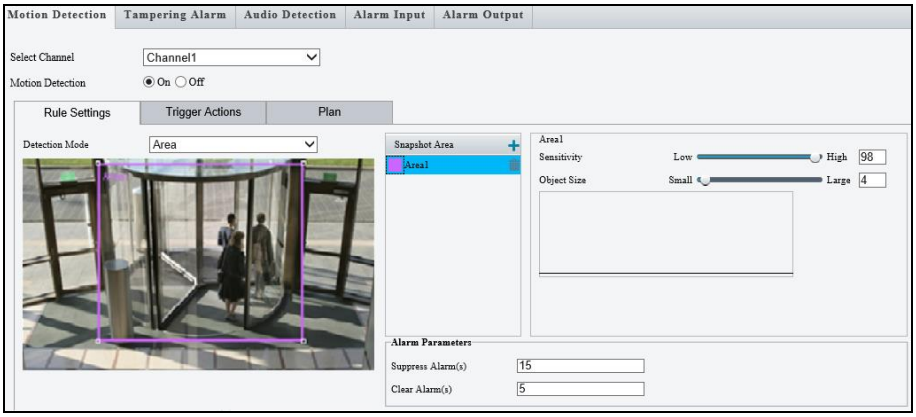

Figure 3-58-1

1. Select the desired channel from the **Select Channel** dropdown list (only applicable to GV-TMS8800).
2. To create a detection area, click . A rectangle appears on the image.
3. Adjust the position, size and shape of the rectangle detection area.
4. Alternatively, select **Grid** as the **Detection Mode** to define the area for detection.
5. Use the following functions to reduce false alarm.
   - **Sensitivity:** Move the slider to adjust the detection sensitivity.
   - **Object Size:** When the extent of motion within the detection area exceeds the set object size, motion detection alarm is triggered.

   Motion detection results of the current detection area are shown below in real time. The red means motions that have triggered a motion detection alarm. The height of the lines indicates the extent of motion. The density of the lines indicates the frequency of motion. The higher a line, the greater the extent. The denser the lines, the higher the frequency.

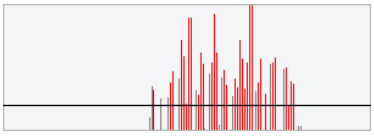

6. Set up **Alarm Parameters**.

- **Suppress alarm (5~3600):** After an alarm is triggered, the alarm will not be reported within the set time.
- **Clear alarm (1~600):** After an alarm is triggered,
  - If the alarm is not triggered within the set time, the alarm will be cleared and the alarm can be reported again.
  - If the alarm is triggered within the set time, the alarm will not be cleared until the suppress alarm time expires. Then the alarm can be reported again.

7. For **Trigger Actions** and **Plan**, follow *Step 6 ~ 7* at the bottom of *3.6.1.1 Cross Line*.

[Ultra Motion Detection]

The camera detects motions of motor vehicles and pedestrians in specified detection areas and reports an alarm when detection rules are triggered.

Figure 3-58-2

1. To add a detection area, click +. A rectangle apppears on the image.
2. Adjust the position, size and shape of the rectangle detection area.
3. Move the **Sensitivity** slider to adjust the detection sensitivity. The higher the sensitivity level, the higher the detection rate of small motions, and the higher the false alarm rate. Configure the setting based on the scene and your actual needs.
4. Select the detection objects: Motor Vehicle, Non-Motor Vehicle and Pedestrian.
5. For **Trigger Actions** and **Plan**, follow *Step 6 ~ 7* at the bottom of *3.6.1.1 Cross Line*.

Note:

1. GV-ABL2703 series / 4703 / 4711, GV-ADR2702 / 4702, GV-BLFC5800, GV-EBD2704 / 2705 / 4701 / 4704 / 4712 / 4813 / 8800 / 8813, GV-EBDP5800 / 8800, GV-EBFC5800, GV-PTZ5810-IR, GV-TBL2703 series / 2705 / 2706 series / 2718 / 4700 / 4703 / 4705 / 4711 / 4810 / 8710 / 8804 / 8810, GV-TBLP5800 / 8800, GV-TDR2702 series / 2704 series / 2705 / 4702 series / 4703 series / 4704 series / 4803 series / 8805, GV-TFD4700 / 4800, GV-TMS8800, GV-TVD2712 / 4700 / 4711 / 4811 / 4810 / 8810, and GV-FER5702 support up to 4 Motion Detection areas while all other models support up to 8.
2. For the **Upload to FTP** function, make sure to configure the settings in *3.8.2 FTP* and *3.3.2 Snapshot* first.
3. For the **Trigger E-mail** function, make sure to configure the settings in *3.2.5 E-mail* and *3.3.2 Snapshot* first.
4. Enabling the Ultra Motion Detection (for Motor Vehicle, Non-Motor Vehicle or Pedestrian) helps detect specific objects and reduces false alarms. However, note that the accuracy of this feature may vary due to environmental factors. Adjust settings as needed for optimal performance.

3.7.2 Tampering Alarm

Tampering alarm is used to detect when the camera is being physically tampered with. An alarm can be generated when the camera is moved, covered up, or out of focus.

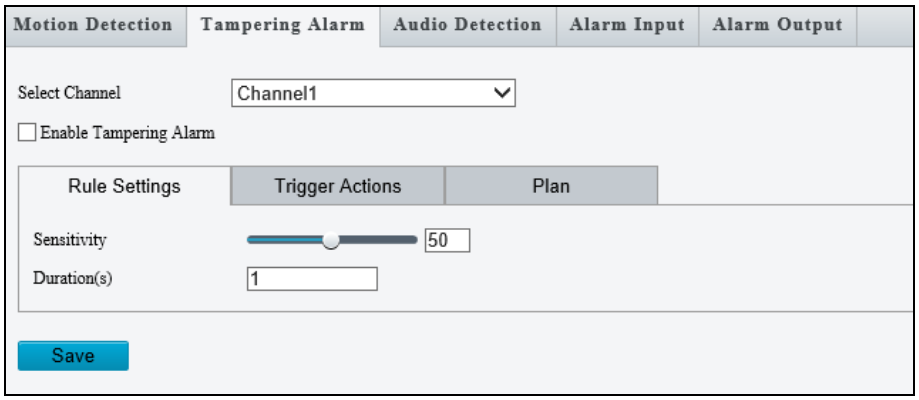

Figure 3-59

1. Select the desired channel from the **Select Channel** dropdown list (only applicable to GV-TMS8800).
2. Select **On** / **Enable Tampering Alarm** to enable **Tampering Alarm**.
3. Use the following functions to adjust the alarm settings.
   - **Sensitivity:** Move the slider to increase or decrease detection sensitivity.
   - **Duration**: Specify the duration of the alarm after which the triggered output device will be turned off.
4. For **Trigger Actions** and **Plan**, follow *Step 6 ~ 7* at the bottom of *3.6.1.1 Cross Line*.

3.7.3 Audio Detection

Note this function is only applicable to audio-in-supporting models.

Audio detection is used to detect abnormal audio volume. When the rise, fall, or change of volume exceeds the set limit, or when the input volume reaches the set threshold, an alarm is generated. Make sure audio input is enabled.

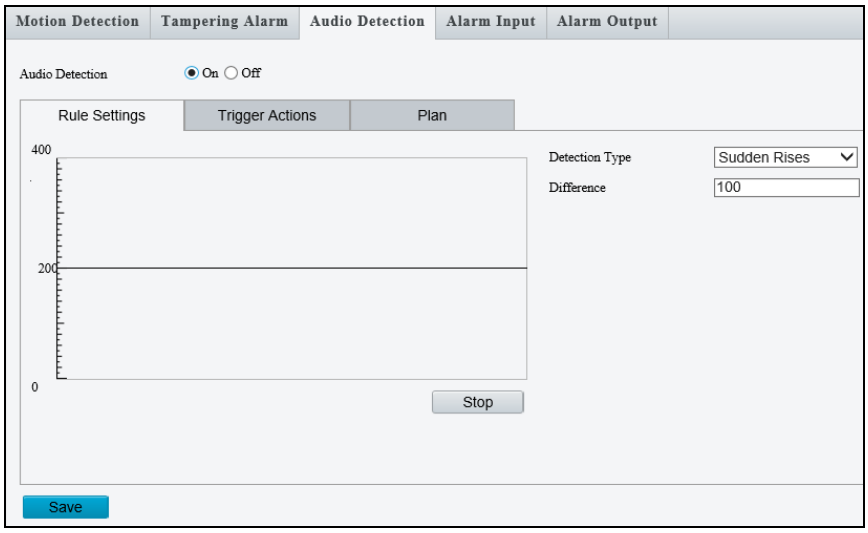

Figure 3-60

1. Select **On** to activate **Audio Detection**.
2. Select a **Detection Type**.
   - **Sudden Rises:** An alarm is reported when the rise of volume exceeds the set Difference.
   - **Sudden Fall**: An alarm is reported when the fall of volume exceeds the set Difference.
   - **Sudden Change**: An alarm is reported when the rise or fall of volume exceeds the set Difference.
   - **Threshold**: An alarm is reported when the volume exceeds the set Threshold.
3. Set a **Difference** or **Threshold**.
4. For **Trigger Actions** and **Plan**, follow *Step 6 ~ 7* at the bottom of *3.6.1.1 Cross Line.*

Select the actions to be triggered by an audio alarm and set a schedule plan if needed. Refer to *3.7.1 Motion Detection* for detailed instructions.

3.7.4 Alarm Input

The camera can receive alarm information from an input device.

Note this function is only applicable to the models supporting the I/O device.

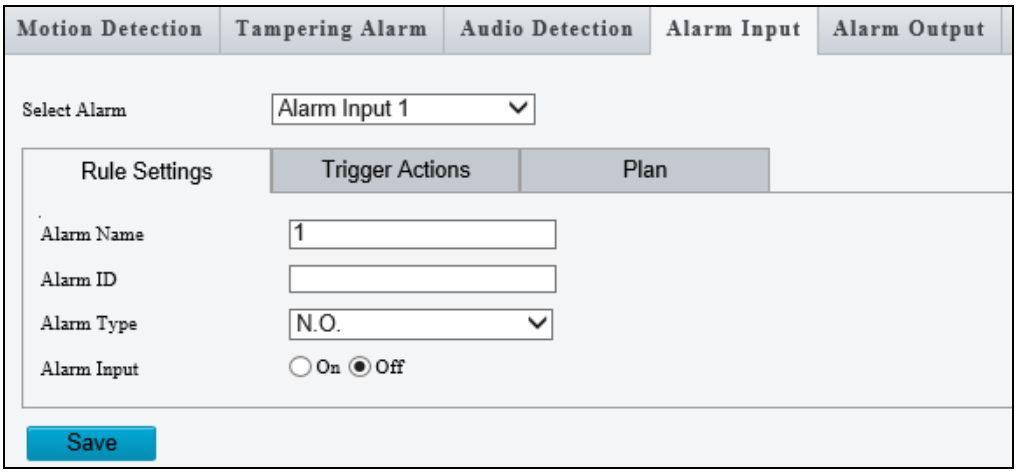

Figure 3-61

1. Select **Alarm Input 1** or **Alarm Input 2** from the drop-down list.
2. Type an **Alarm Name**, and set an **Alarm ID**.
3. Select **Normally Open** or **Normally Closed** according to the type of the alarm input device.
4. Select **Enable** next to Alarm Input.
5. For **Trigger Actions** and **Plan**, follow *Step 6 ~ 7* at the bottom of *3.6.1.1 Cross Line*.
6. Click **Save**.

3.7.5 Alarm Output

After alarm output is triggered by a motion detection alarm, temperature alarm or input alarm, the camera can trigger an output device.

Note this function is only applicable to the models supporting the I/O device.

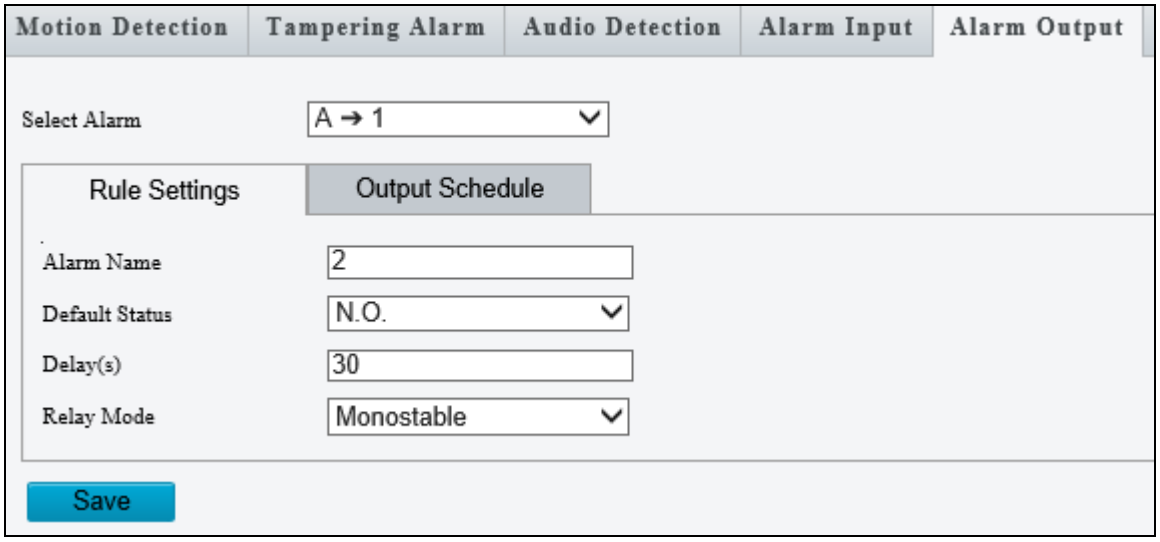

Figure 3-62

1. Type the **Alarm Name** for the output device.
2. Set the status to **Normally Open** (default setting).
3. Set the alarm duration.
4. Set relay mode to trigger the output device as alarm lights. Select **Monostable** to trigger by pulse or **Bistable** by low or high level.
5. Set a schedule plan in **Output Schedule** by following *Step 7* at the bottom of *3.6.1.1 Cross Line*.
6. Click **Save**.

3.7.6 One-Key Disarming

You can disable input / output alarms or e-mail alert triggers over a specified time period.

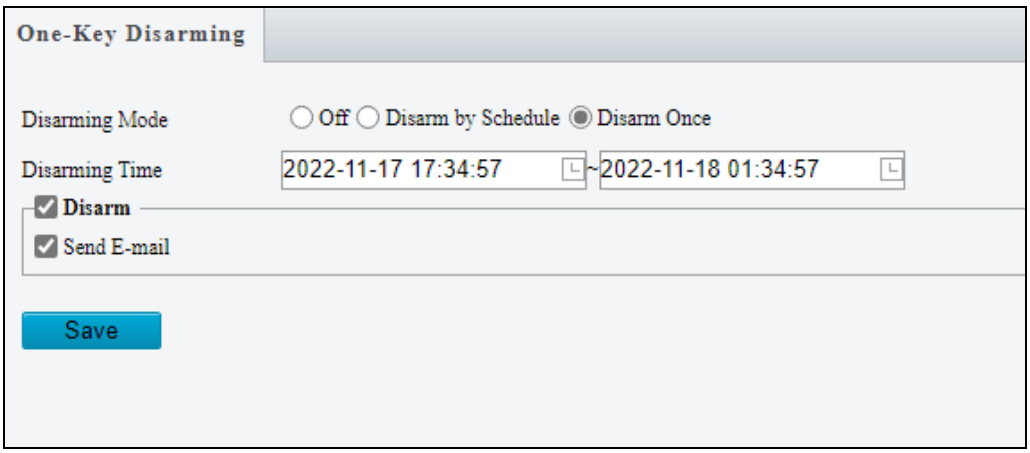

Figure 3-63

1. Select **Off**, **Disarm by Schedule**, or **Disarm Once** under the **Disarming Mode**. For **Disarm by Schedule** and **Disarm Once**, set the desired shielding time period under **Disarming Time**.
2. Select **Alarm Input / output** / **Send E-mail** / **Alarm Sound** you wish to disable under **Disarm**.
3. Click **Save**.

3.8 Storage

This section allows you to configure storage related settings and set up FTP server.

3.8.1 Formatting Storage

After inserting a memory card, you need to reboot the camera and refresh the Web interface. You can configure the storage settings on the **Storage** page.

Note this function is only available on the models with a SD card slot.

[Storage]

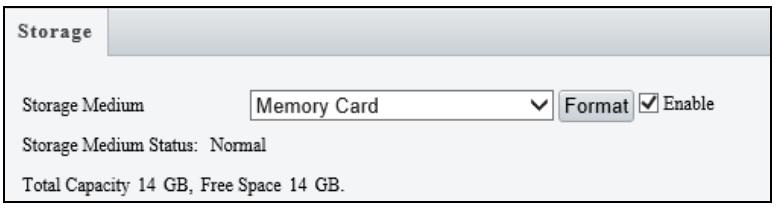

Figure 3-64

- **Storage Medium**: Click the **Format** button to format the memory card before you start recording and **Enable** the memory card.

[Allocate Capacity]

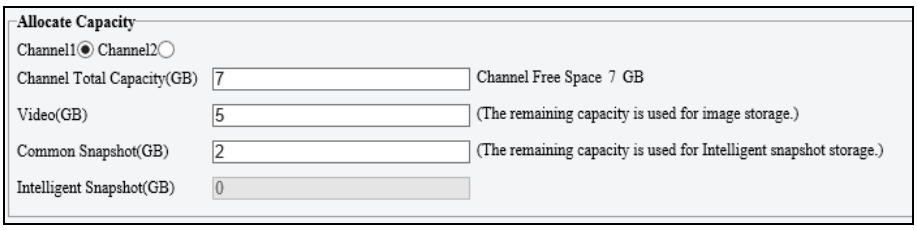

Figure 3-65

- **Channel 1 / Channel 2:** Select the channel for the following capacity configurations (only applicable to GV-TMS8800).
- **Channel Total Capacity (GB):** Specify the total capacity for the selected channel (only applicable to GV-TMS8800). The camera will automatically allocate the capacity for the other channel after the capacity for one channel is set.
- **Video**: Set the storage capacity used to store recorded videos. The remaining capacity is used for captured snapshots.

- **Common Snapshot**: The storage capacity used to store captured snapshots.
- **Face Snapshot**: The storage capacity used to store captured face snapshots.
- **Intelligent Snapshot**: The storage capacity used to store captured snapshots of motor vehicle (cars, trucks, and buses), non-motor vehicle (bicycles and motorcycles), and people.

[Video Storage Info]

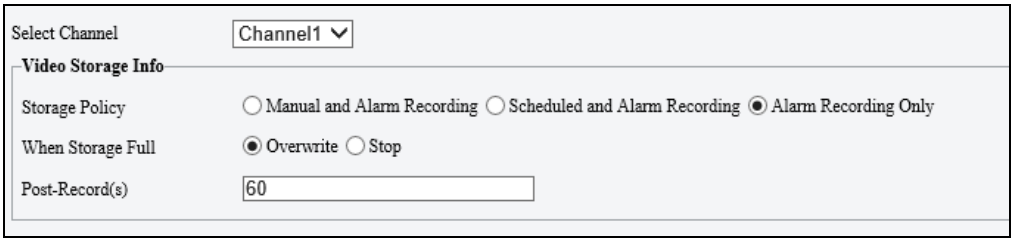

Figure 3-66

- **Select Channel:** Select the desired channel for video storage configurations from the dropdown list (only applicable to GV-TMS8800).
- **Storage Policy**: Choose the Storage Policy from the three options.
  - **Manual and Alarm Recording**: Manually start recording and upon input-triggered events.
  - **Scheduled and Alarm Recording**: Start recording by schedule and upon input-triggered events.
  - **Alarm Recording Only**: Start recording upon input-triggered events.

Note: The file size of more than 500 MB is required to create one recording file.

Note for **GV-ABL4711, GV-EBD2704 / 4701 / 4712, GV-TBL2705 / 4700 / 4711, GV-TDR2704 series / 4703 series, GV-TFD4700, and GV-TVD4700 / 4711**, the options for Storage Policy are as follows:

- **Manual Storage**: Manually start recording.
- **Planned Storage**: Start recording by schedule.
- **Off**: Stop recording.

- **Stream**: Select the stream you want to use for recording.
- **When Storage Full**:
  - **Overwrite**: If there is no free space in the memory card, new data will overwrite the existing date repeatedly.
  - **Stop**: If there is no free space in the memory card, new data will not be saved to the memory card.

Note: This function is NOT applicable to GV-ABL4711 / TBL4711 / TFD4700 / TVD4711.

- **Post Record(s)**: When an alarm is raised, the camera is triggered to record live video and continues recording for the specified post-record time after the alarm is cleared.

3.8.2 FTP

You can upload snapshots and videos from the camera to a specified FTP server.

FTP

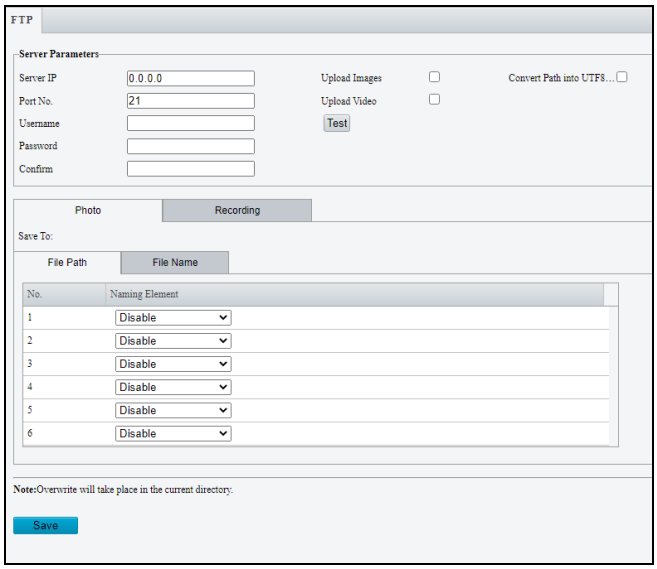

Figure 3-67

1. Type the **Server IP** address.
2. Change the **Port No.** of the FTP server if needed.
3. Type the **Username** and **Password** of the upload account.
4. Enable **Upload Images / Upload Video**.
5. Select **Convert Path to UTF8** format if necessary.
6. Under **File Path** on the **Photo / Recording** tab, select a directory in which to save the images / recordings, or select **Custom** to name a storage folder on the FTP server.
7. Under **File Name**, select a **Separator** and a combination of **Naming Element(s)** to name the snapshots captured. A template of the file name is shown.
8. Click **Save.**

Note: To upload snapshots, make sure to enable the **Snapshot** function. For more detailed instructions, refer to *3.3.2 Snapshot*.

Certain models have the following UI**:**

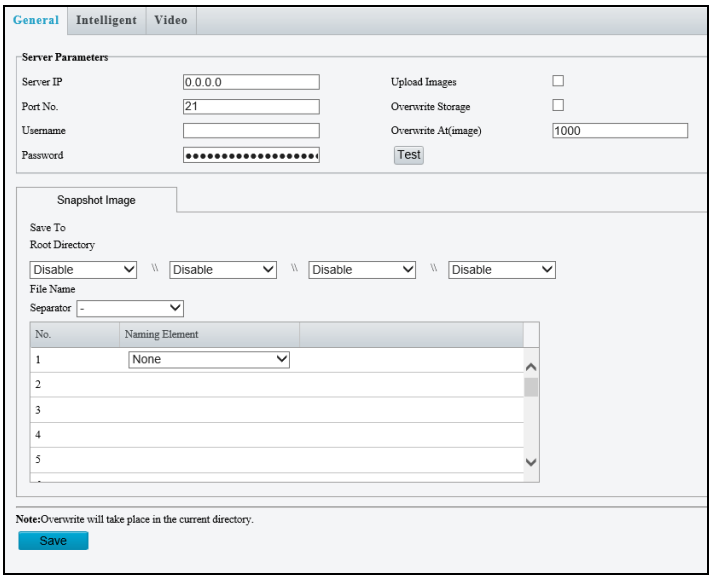

Figure 3-68

1. Type the **Server IP** address.
2. Change the **Port No.** of the FTP server if needed.
3. Type the **Username** and **Password** of the upload account.
4. Enable **Upload Images**.
5. Select **Overwrite Storage** to overwrite the oldest images when the storage is full. You can set the maximum number of images allowed in **Overwrite At (Image)**. When the defined image threshold is reached, the oldest image is overwritten.
6. **Save To Root Directory**: Select a directory in which to save the images, or select **Custom** to name a storage folder on the FTP server.
7. Under **File Name**, select a **Separator** and a combination of **Naming Element(s)** to name the snapshots captured. A template of the file name is shown.
8. Click **Save.**

Note:

1. To upload snapshots, make sure to enable the **Snapshot** function. For more detailed instructions, refer to *3.3.2 Snapshot*.
2. If **Overwrite Storage** is not selected and the storage is full, snapshots can no longer be taken.

Face (Intelligent)

This function is used to store snapshots taken for smart functions such as face detection.

For **GV-BLFC5800, GV-EBD4813 / 8800 / 8813, GV-EBFC5800, GV-PTZ5810-IR, GV-TBL4810 / 8804 / 8810, GV-TDR4803 series / 8805, GV-TFD4800,** and **GV-TVD4810 / 8810**, this function is named Intelligent to store captured snapshots of motor vehicle (cars, trucks, and buses), non-motor vehicle (bicycles and motorcycles), and people.

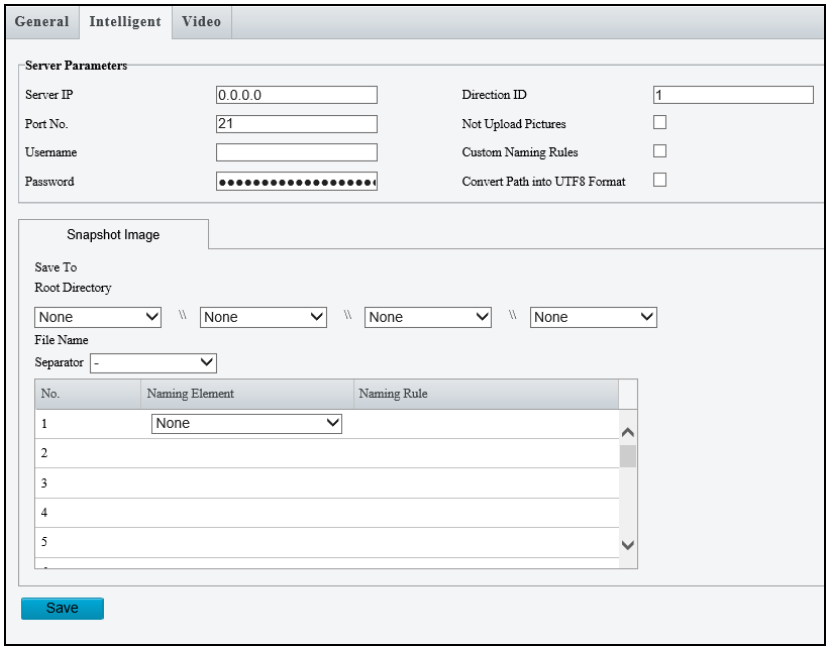

Figure 3-69

1. Type the **Server IP** address.
2. Change the **Port No.** of the FTP server if needed.
3. Type the **Username** and **Password** of the upload account.
4. **Save To Root Directory**: Select a directory in which to save the images, or select **Custom** to name a storage folder on the FTP server.
5. Under **File Name**, select a **Separator** and a combination of **Naming Element(s)** to name the snapshots captured. A template of the file name is shown.

3.8.3 Backing Up Storage

Note this function is only applicable to Internet Explorer browsers.

In the Photo setting, you can back up the existing videos and snapshots to your local PC.

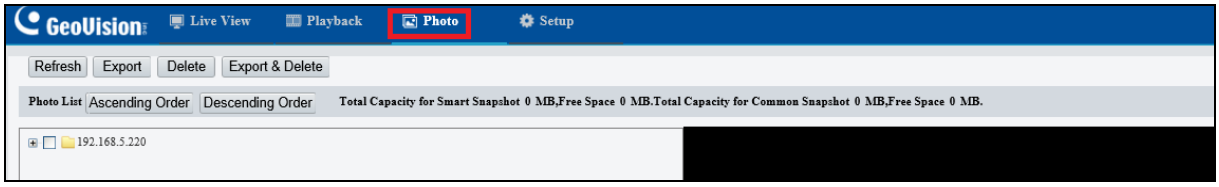

Figure 3-70

1. Select **Photo** at the top of the Web interface and click **Refresh**.
2. Click **Ascending Order** or **Descending Order** to sort the folders.
3. Click ⊞ to view more folders and select or deselect the folders to back up.
4. Click **Export** and select a destination to store the selected folders.
5. Click **Delete** to delete the selected folders.

3.9 Security

This section allows you to create user accounts and set the network security settings.

3.9.1 User

There are three types of accounts: **Administrator**, **Common User**, and **Operator**.

- **Administrator:** Admin has full permission and can manage all users and devices. Only one admin account is allowed in the system.
- **Common User:** Common User only has permission to play live and recorded video. Up to 31 common users are allowed in the system.
- **Operator:** Operator has access to live view, playback, snapshot, two-way audio, PTZ control, log, and has permission for configurations under Parameter Configuration, Event, Subscription, Maintenance, and Upgrade.

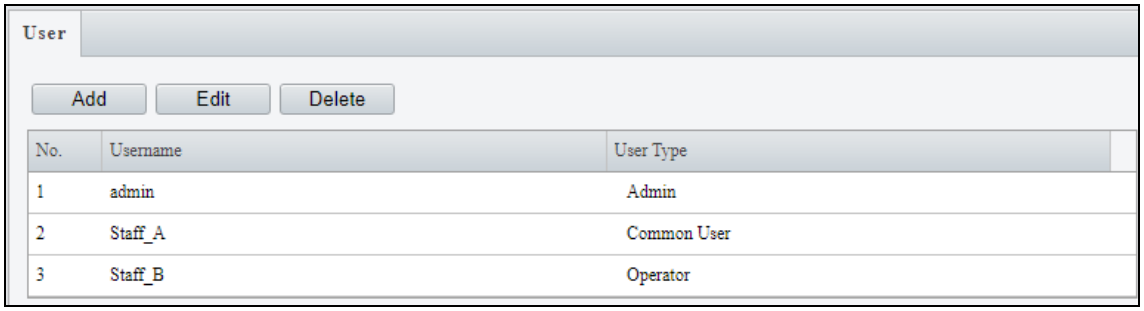

Figure 3-71

Note:

1. The Username of the Admin account cannot be modified.
2. Changing the username or password of a user while the user is logged in will force the user to log out. The user must use the new username or password to log in.
3. A total of 31 common and operator users are allowed in the system.
4. The **Operator** is not available in some models.

3.9.2 Network Security

There are six types of network security settings: **HTTPS**, **Authentication**, **ARP Protection, IP Address Filtering**, **Access Policy**, and **WebSocket**.

HTTPS

You can enable the Hypertext Transfer Protocol Secure (HTTPS) settings to access the camera through a secure protocol. Click **On** to enable, and optionally click **Browse** to locate an SSL certificate from your local computer and click **Upload**.

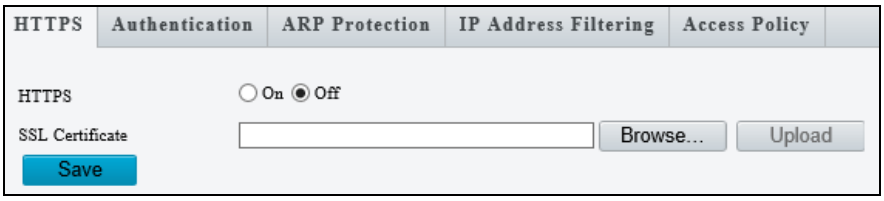

Figure 3-72

Authentication

RTSP (Real Time Streaming Protocol) and HTTP (Hypertext Transfer Protocol) are different application layer protocols for transmitting video. Set the **Authentication** mode for RTSP streaming or HTTP streaming.

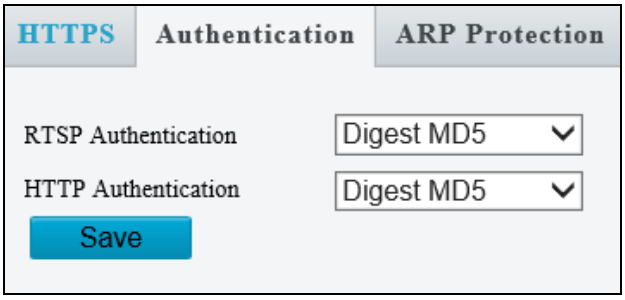

Figure 3-73

For RTSP command, see *Appendix B*.
For HTTP command, see *Appendix C*.

ARP Protection

This function can protect the camera from ARP attacks. When the camera visits an IP of another network segment via a gateway, it can only communicate with the MAC address binding to the gateway address in the same segment.

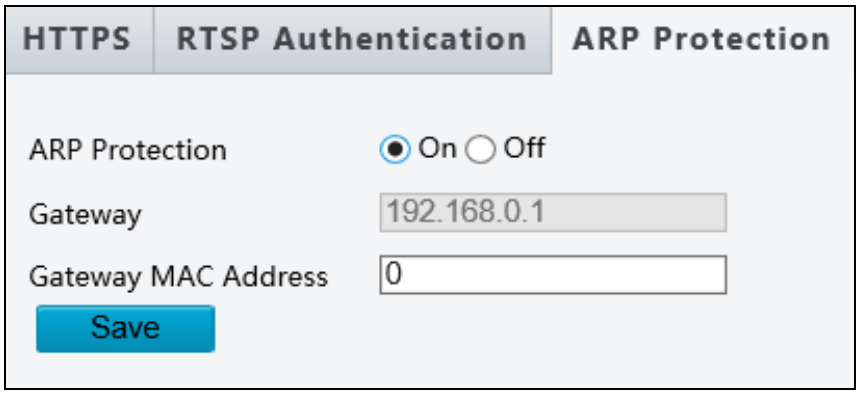

Figure 3-74

1. Select **On** to enable **ARP Protection**.
2. Type **Gateway MAC Address**.
3. Click **Save**.

IP Address Filtering

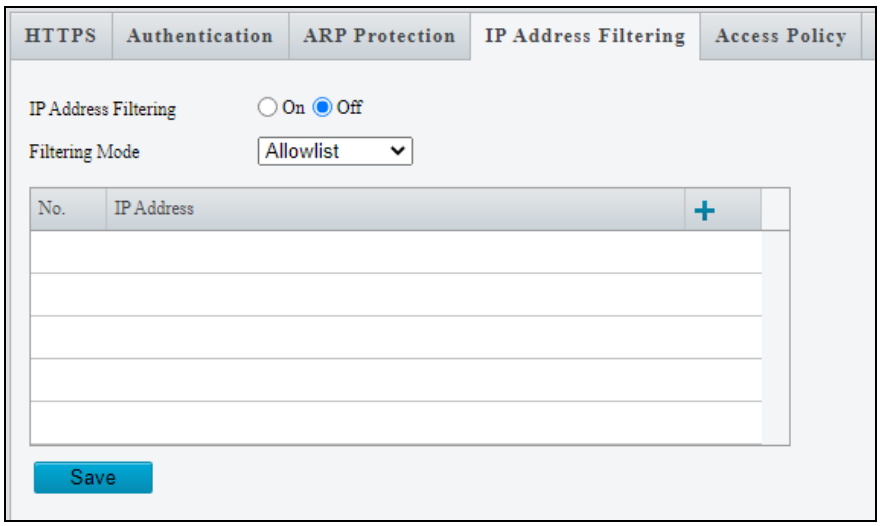

Figure 3-75

1. Select **On** to enable IP Address Filtering.
2. Choose a Filtering Mode: **Allowlist** or **Deny Access**.
3. Click + to add an IP address.
4. Click 🗑 to delete an IP address.
5. Click **Save**.

Access Policy

Access Policy measures the strength of account passwords upon login.

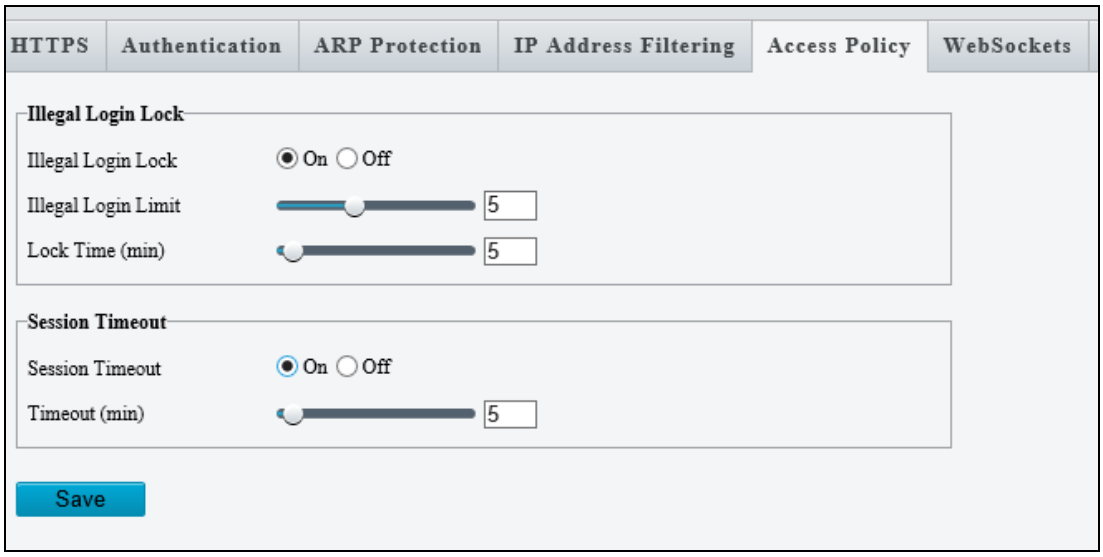

Figure 3-76

[Illegal Login Lock]

1. Select **On** to enable Illegal Login Lock for the camera to apply an account lockout.
2. Specify the **Illegal Login Limit** and **Lock Time** to activate the lockout when reaching the number of failed login attempts and for the lockout duration.

[Session Timeout]

1. Select **On** to enable an automatic logout.
2. Specify the **Timeout** duration for the camera to automatically log out when reaching the set duration.

Some models have the following setting page:

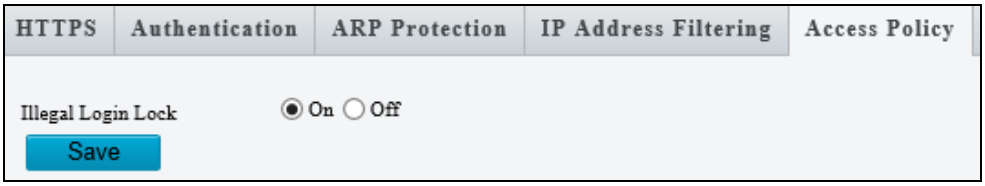

Figure 3-77

By enabling **Illegal Login Lock,** the camera will apply a 5-minute account lockout duration after 5 failed login attempts.

WebSocket

The page allows you to enable and disable WebSocket settings. For details, see *3.2.9 WebSocket*.

3.10 System

This section allows you to set the camera time and update the firmware.

3.10.1 Time

You can use the following methods to adjust the system time of your camera.

Time

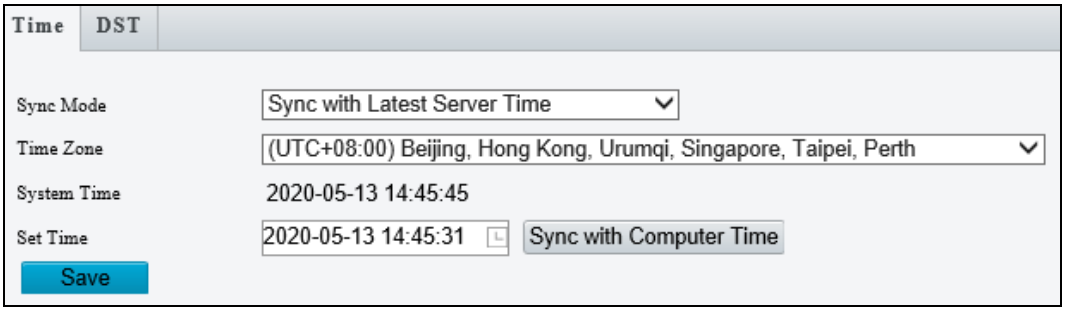

Figure 3-78

1. Select a **Sync Mode**.
   - ⊙ **Sync with System Configuration**: Select a Time Zone, manually set a time by clicking on the System Time, or synchronize with the computer time.
   - ⊙ **Sync with NTP Server**: To synchronize with a network time server, type the IP address of the network time server next to **NTP Server Address** and specify the Update Interval.
   - ⊙ **Sync with Management Server (ONVIF)**: The device time is synchronized with Management Server (ONVIF).
   - ⊙ **Sync with Latest Server Time**: The device time is synchronized with the latest updated time, either on ONVIF or the Web interface.
2. Select a **Time Zone**.
3. Next to **System Time**, manually set the camera's time or click **Sync with Computer Time** to synchronize with the time of your PC.
4. Click **Save**.

DST

To adjust the camera's time for daylight saving time:

1. Click the **DST** tab at the top.

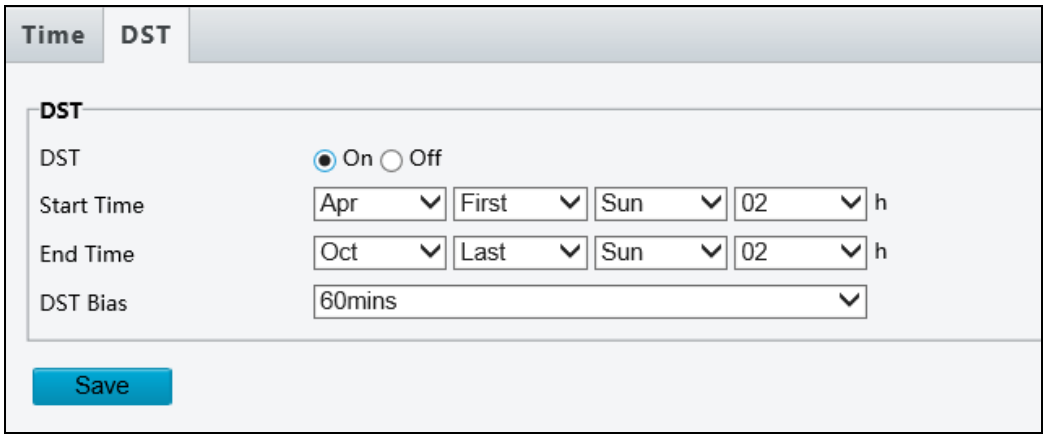

Figure 3-79

2. Select **On** to enable **DST**.
3. Set a **Start Time** and **End Time** for the Daylight Saving Time.
4. Select a time period for **DST Bias**.
5. Click **Save**.

3.10.2 Server

Server

The Server allows you to quickly access the FTP setting page. Click the **Configure FTP** button to go to the FTP settings page and complete the storage settings. See *3.8.2 FTP* for details.

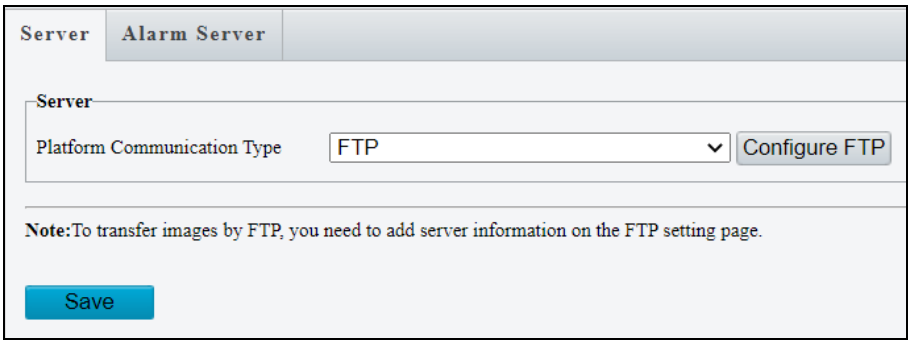

Figure 3-80

Alarm Server

The camera can automatically report alarms to a specified third-party server. You need to configure the server IP, port, and protocol (HTTP or HTTPS). Then the camera can report alarms to the server.

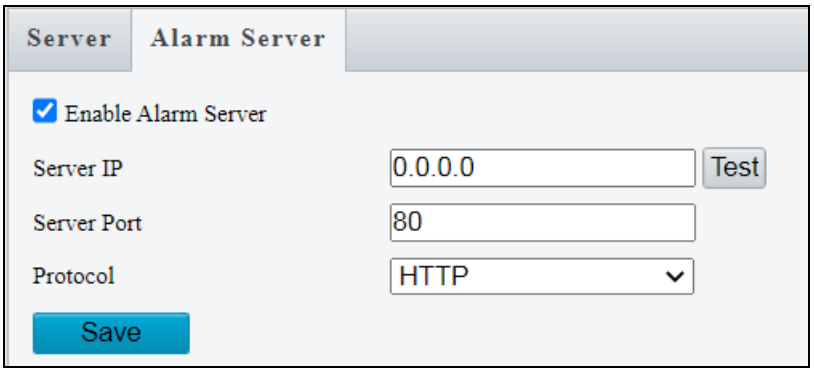

Figure 3-81

3.10.3 Maintenance

This section allows you to upgrade the firmware, restart the camera, and backup/import camera configurations.

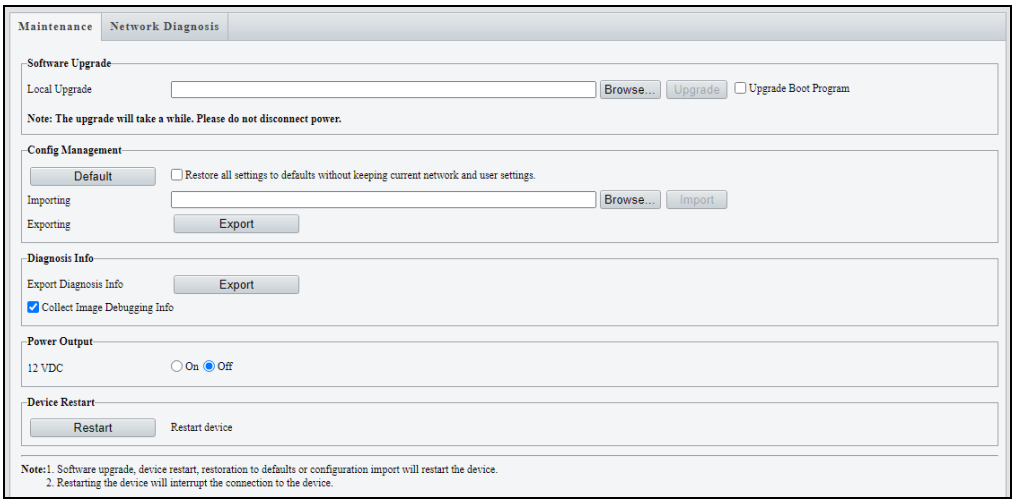

Figure 3-82

[Software Upgrade]

For detailed instructions, refer to *4.1 Upgrading System Firmware* and *4.1.1 Using the Web Interface*.

[Config Management] Export the current configurations of the camera and save them to the PC or an external storage medium. You can also quickly restore configurations by importing backup configurations stored on the PC or an external storage medium back to the camera.

Note:

1. When exporting the configuration file, you will be prompted to set the password, which will be later requested for importing the file.
2. To ensure a successful configuration import, avoid using the exported file from a different firmware version and model.

[Diagnosis Info] Includes logs and system configurations. Click **Browse** to select a destination folder on your PC and then **Export** to save diagnostic information.

[Power Output] Click **On** to enable 12V DC power output. Note this is only applicable to GV-TFD4800, TMS8800, and TVD4810 / 4811 / 8810.

[Device Restart] Click **Restart** to restart the device after you confirm the operation.

3.10.4 Network Diagnosis

This section allows personnel to examine your network environment.

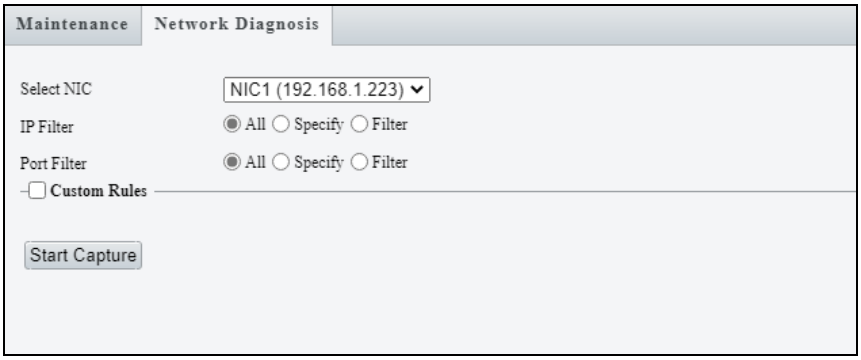

Figure 3-83

3.10.5 Log

Log allows you to inquire configurations made on the camera and export the information to the local PC.

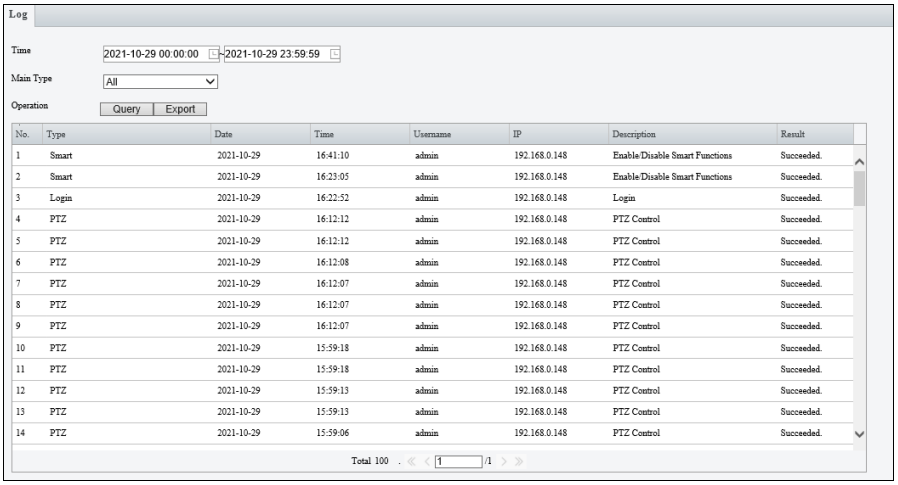

No.	Type	Date	Time	Username	IP	Description	Result
1	Smart	2021-10-29	16:41:10	admin	192.168.0.148	Enable/Disable Smart Functions	Succeeded.
2	Smart	2021-10-29	16:23:05	admin	192.168.0.148	Enable/Disable Smart Functions	Succeeded.
3	Login	2021-10-29	16:22:52	admin	192.168.0.148	Login	Succeeded.
4	PTZ	2021-10-29	16:12:12	admin	192.168.0.148	PTZ Control	Succeeded.
5	PTZ	2021-10-29	16:12:12	admin	192.168.0.148	PTZ Control	Succeeded.
6	PTZ	2021-10-29	16:12:08	admin	192.168.0.148	PTZ Control	Succeeded.
7	PTZ	2021-10-29	16:12:07	admin	192.168.0.148	PTZ Control	Succeeded.
8	PTZ	2021-10-29	16:12:07	admin	192.168.0.148	PTZ Control	Succeeded.
9	PTZ	2021-10-29	16:12:07	admin	192.168.0.148	PTZ Control	Succeeded.
10	PTZ	2021-10-29	15:59:18	admin	192.168.0.148	PTZ Control	Succeeded.
11	PTZ	2021-10-29	15:59:18	admin	192.168.0.148	PTZ Control	Succeeded.
12	PTZ	2021-10-29	15:59:13	admin	192.168.0.148	PTZ Control	Succeeded.
13	PTZ	2021-10-29	15:59:13	admin	192.168.0.148	PTZ Control	Succeeded.
14	PTZ	2021-10-29	15:59:06	admin	192.168.0.148	PTZ Control	Succeeded.

Figure 3-84

3.10.6 Ports and Devices

This section allows you to exchange data with a third-party device with the RS485 serial port. Note that the serial setting on the camera should match that of the connected third-party device.

Note this function is only applicable to **GV-PTZ5810-IR**.

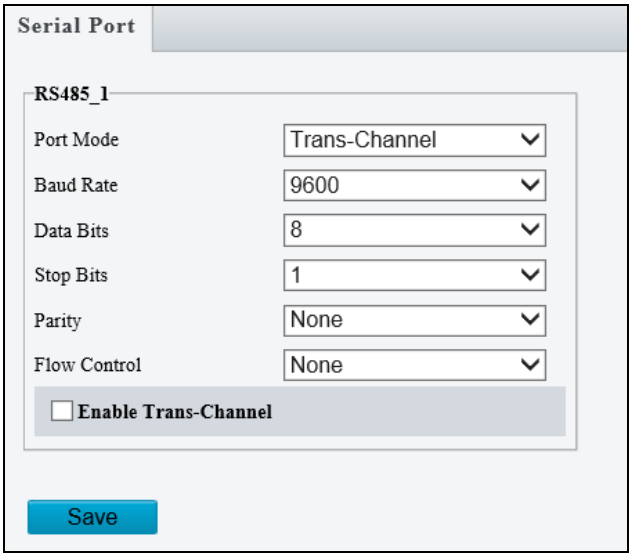

Figure 3-84

[Port Mode]

- **Transparent Channel:** Select **Trans-Channel** from the drop-down list of **Port Mode** to achieve a transparent data transmission with a third-party device.
- **OSD:** Select **OSD** from the drop-down list of **Port Mode** to display information from a third-party device. This mode allows the camera to receive information from the third-party device through the RS485 serial port, translate the received information, and display it on the local OSD.
- **Local PTZ Control:** Select **Local PTZ Control** from the drop-down list of **Port Mode.** This mode allows you to control a local PTZ camera through a third-party device without having to use the local camera's PTZ control panel.
- **ONVIF Transparent Channel:** Select **Trans-Channel via ONVIF** from the drop-down list of **Port Mode**. This mode allows you transmit data through ONVIF transparent channel between the camera's RS485 port and a third-party device.

Chapter 4 Advanced Applications

This chapter introduces more advanced applications.

4.1 Upgrading System Firmware

GeoVision periodically releases updated firmware on the company website. The new firmware can be loaded into the camera using the Web interface or **GV-IP Device Utility**.

Important Notes before You Start

Before you start updating the firmware, please read these important notes:

1. If you use GV-IP Device Utility for firmware upgrade, the computer used to upgrade firmware must be under the same network as the camera.
2. Stop monitoring on the camera.
3. Stop the camera's connection to GV-VMS / DVR / NVR and all remote connections.
4. While the firmware is being updated, the power supply must not be interrupted.
5. If firmware upgrade fails, you will need to restore the camera back to its default settings. For details, see *4.2 Restoring to Factory Default Settings*.

WARNING:

1. The interruption of power supply during updating causes not only update failures but also damages to your camera. In this case, please contact our sales representatives and send your device back to GeoVision for repair.
2. It is not suggested to downgrade firmware since it may cause unpredictable issues.

4.1.1 Using the Web Interface

Log into the Web interface and follow the steps below to update the firmware.

1. At the top, click **Setup.**
2. In the left menu, select **System** and select **Maintenance**. This page appears.

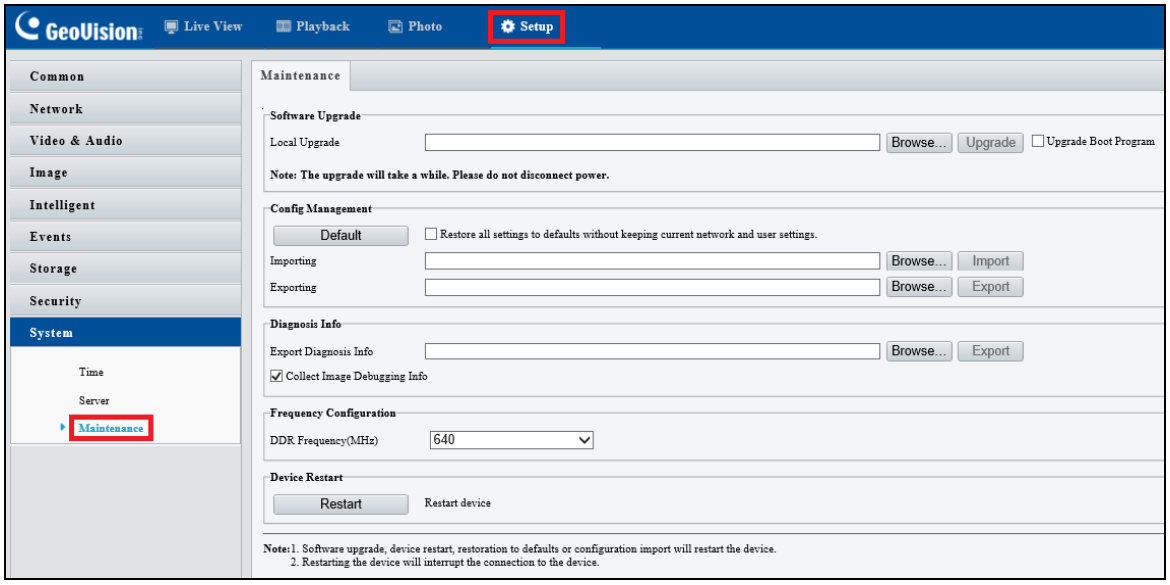

Figure 4-1

3. Click **Browse** under **Software Upgrade** to locate the firmware file (.zip) saved at your local computer.
4. Click **Upgrade** to process the upgrade.

4.1.2 Using GV-IP Device Utility

You can upgrade the camera firmware using GV-IP Device Utility. Note the computer used to upgrade firmware must be under the same network as the camera.

1. Download **GV-IP Device Utility** from the company website. Then follow the onscreen instructions to install the program.
2. Double-click the **GV IP Device Utility** icon created on your desktop.
3. Click the camera in the list and select **Configure**.

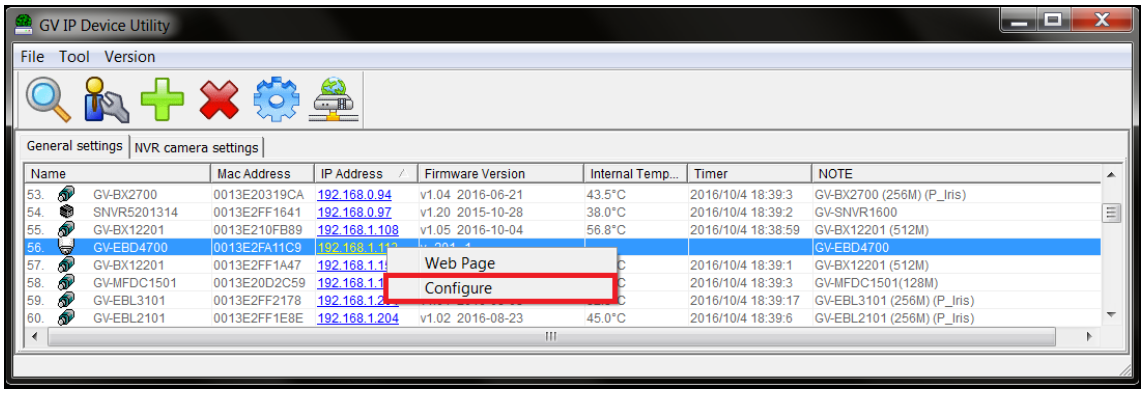

Figure 4-2

5. Type the camera's user name and password to log in.
6. Click the **Firmware Upgrade** tab. This dialog box appears.

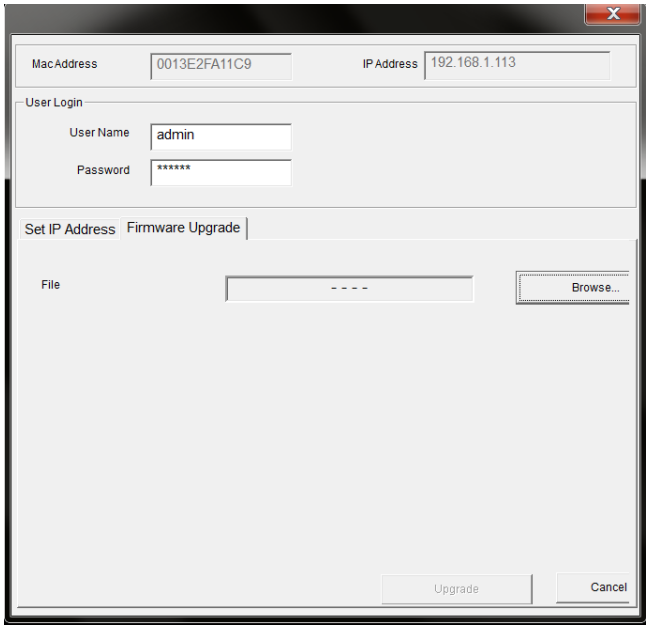

Figure 4-3

7. Click **Browse** to locate the firmware file (.zip) saved at your local computer.
8. Click **Upgrade** to start upgrading the firmware.

4.2 Restoring to Factory Default Settings

If for any reason the camera is not responding correctly, you can restore the camera back to its factory default settings using the Web interface or the Default button.

To use the Web interface:

1. In the Web interface, click **Setup**.
2. In the left menu, select **System** and select **Maintenance**.
3. Under the **Config Management** section, click **Default**.

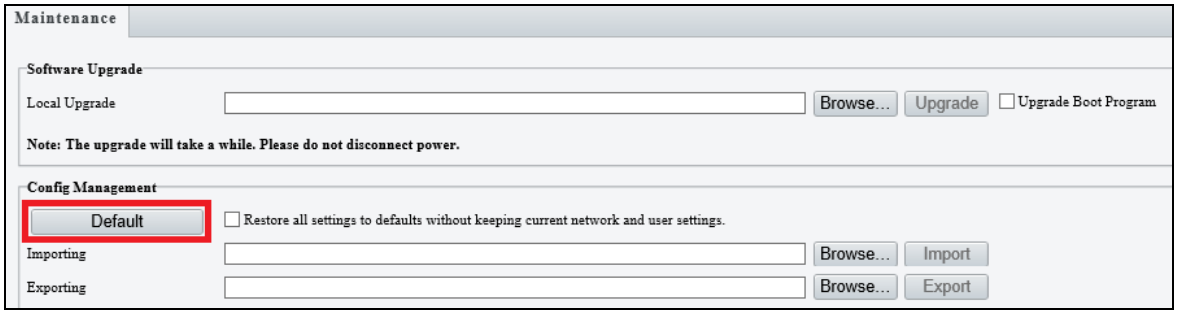

Figure 4-4

Note:

1. Only the following models have a default button: **GV-EBD4711** / **4712** / **8711 / 8813**, **GV-EBDP5800**, **GV-ABL2703 series** / **4703**, **GV-AVD2700** / **4710** / **8710**, **GV-FER5702, GV-PTZ5810-IR, GV-TBL2703 series** / **2718** / **4703 / 4807 / 8804, GV-TBLP5800, GV-TFD4700 / 4800, GV-TMS8800**, and **GV-TVD2712 / 4700** / **4710** / **4711** / **4811** / **8710 / 8810**. For where the button is on the camera, see the *Overview* section in their respective chapters.
2. If the default button doesn't respond after pressing for 15 seconds, reboot the camera and try again within 10 minutes of rebooting.

Chapter 5 DVR / NVR / VMS

The GV-VMS / DVR / NVR provides a full range of video management functions and features, such as video viewing, recording, playback, alert settings, and more. The following is a list of related integration specifications:

- For a list of compatible versions of GV-VMS / DVR / NVR based on your camera model, see *Appendix D*.
- The following lists the maximum throughput and streams when an IP camera is connected to other applications:

Model	Maximum throughput	Maximum stream (When the total bitrate is within the maximum throughput)
GV-ABL4712 GV-AVD4710 GV-TBL4710 GV-TVD4710	30 Mbps	20
GV-EBD2704 GV-EBD4704 GV-TBL2705 GV-TBL4705 GV-TDR2704 GV-TDR4704	40 Mbps	6
GV-TMS8800 GV-EBDP8800 GV-TBLP8800	50 Mbps	20
GV-EBD2705 GV-TBL2706 series GV-TBL2718 GV-TDR2705 GV-TVD2712	50 Mbps	6
Other models	40 Mbps	20

- When an IP camera is connected to IE browser or any GeoVision CMS application, it takes up 1 stream; when it is connected to GV-VMS / DVR / NVR, it takes up 2 streams.

5.1 Setting Up IP Cameras on GV-DVR / NVR

To set up the camera on GV-DVR / NVR, follow these steps:

1. On the main screen, click the **Configure** button, select **System Configure**, select **Camera Install** and click **IP Camera Install**. This dialog box appears.

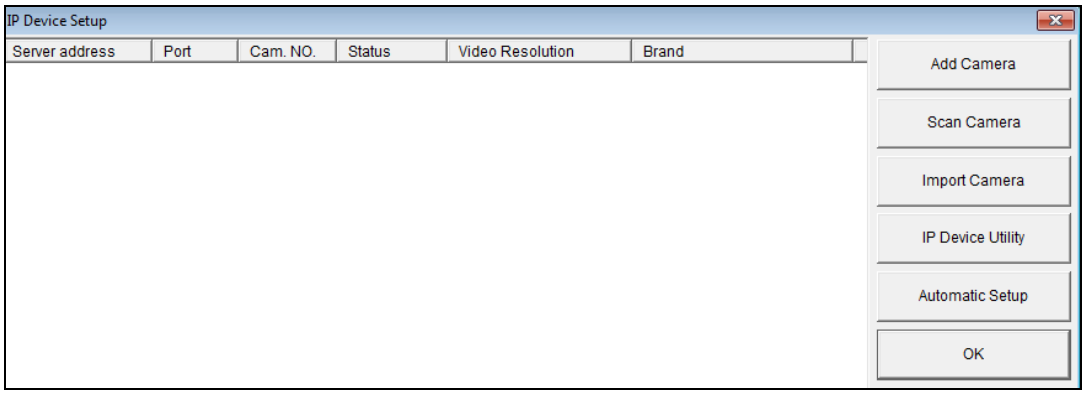

Figure 5-1

2. To automatically set up the camera, click **Scan Camera** to detect any camera on the LAN.

3. Double-click your camera and type the camera's **User name** and **Password.**

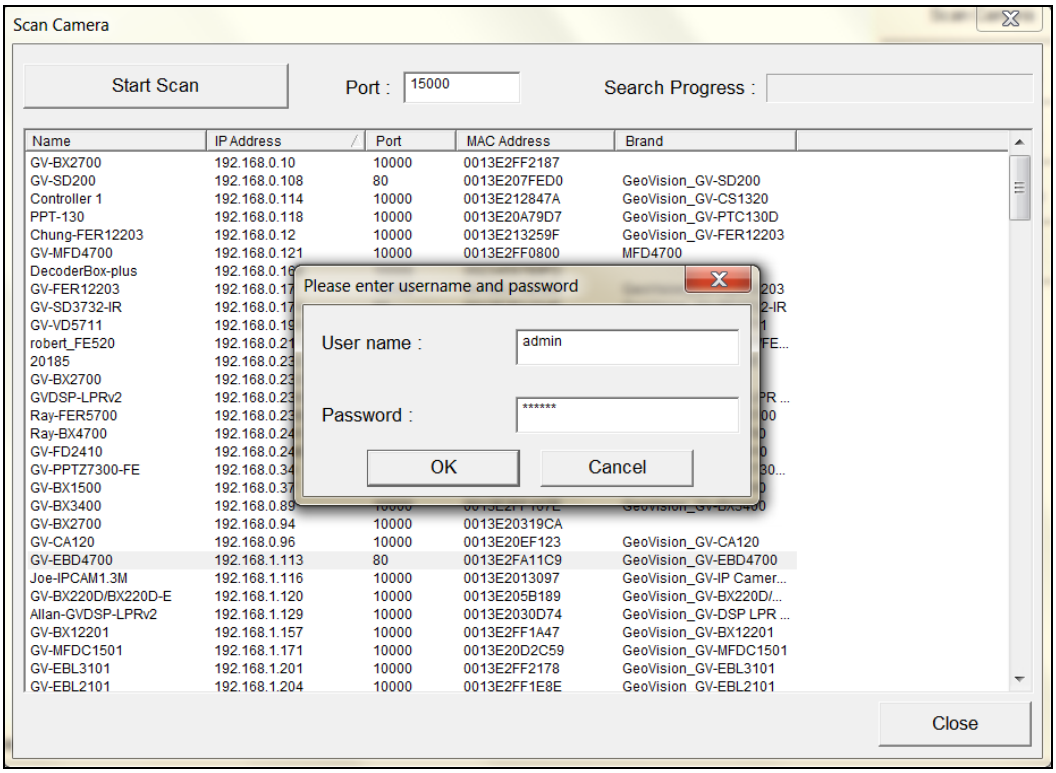

Figure 5-2

4. Click **OK**. This dialog box appears.

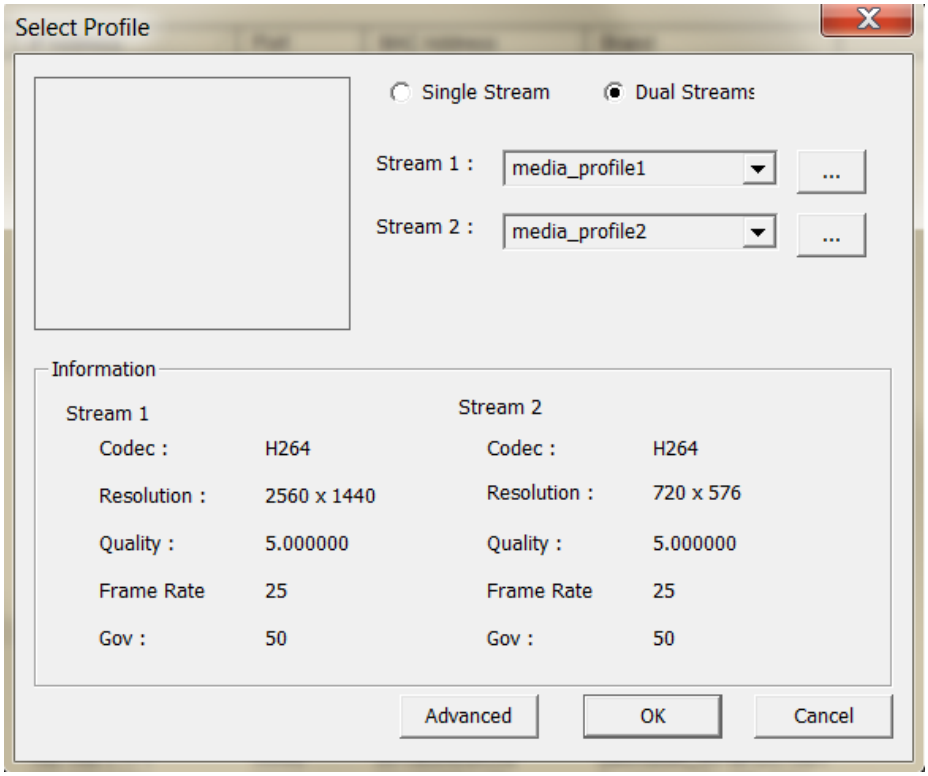

Figure 5-3

5. Click **OK**. The IP camera is added to the connection list.

6. Click the listed camera and select **Display position** to map the IP camera to a channel on the GV-DVR / NVR.

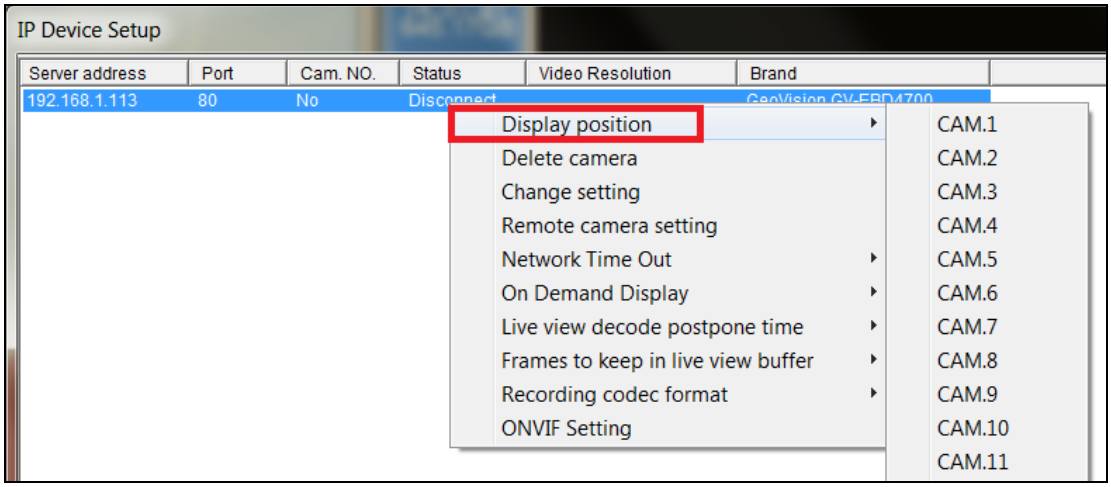

Figure 5-4

7. The Statue column should display "**Connected**". Click **OK.**

After the camera is connected and assigned with a display position, you can configure the camera's settings, such as frame rate, codec type and resolution. Right-click the desired camera to see the following list of options:

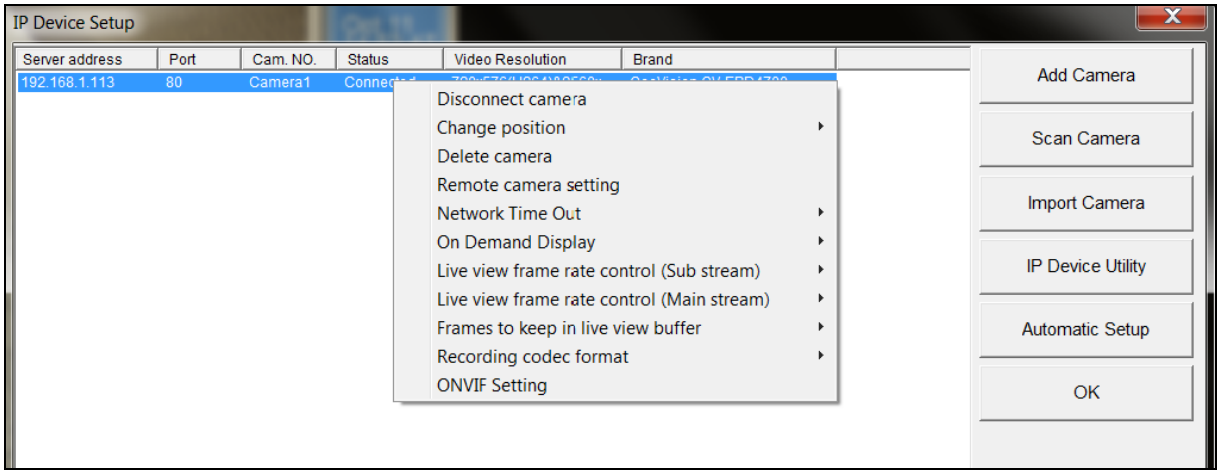

Figure 5-5

- **Network Time Out:** When network disconnection exceeds the specified time period, the camera status displayed as Connection Lost.
- **On-Demand Display:** Enable automatic switching between main stream and sub stream based on the size of camera image on screen.
- **Live-view frame rate control (Sub / Main):** Set the frame rate of the stream to help reduce the CPU usage. If the codec is set as MJPEG, select the number of frames to allow in a second. If the codec is H.265 or H.264, select one of the following options:
  - **Maximum Live-view Frame Rate:** View the video at the maximum frame rate possible.
  - **Live-view Key Frame only:** You can choose to view the key frames of the videos only instead of all frames on the live view. This option is related to the GOP setting of the IP camera. For example, if the GOP value is set to 30, there is only one key frame in every 30 frames.
- **Frames to keep in live view buffer:** Specify the number of frames to keep in the live view buffer.
- **Recording Codec Format:** Select the codec to record in.

5.2 Setting Up IP Cameras on GV-VMS

Follow the steps below to manually connect your camera to GV-VMS.

1. To access the IP Device Setup page, click **Home**, select **Toolbar**, click **Configure** and select **Camera Install**.

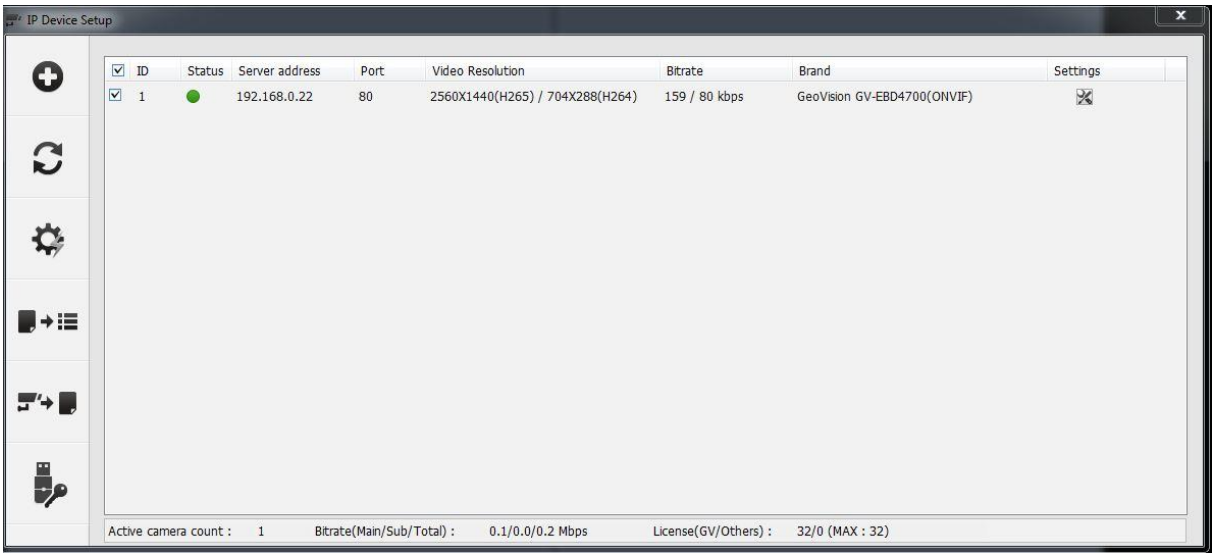

Figure 5-6

2. Click **Automatic Setup**.
3. Double-click the camera and type the **User name** and **Password** of the camera.

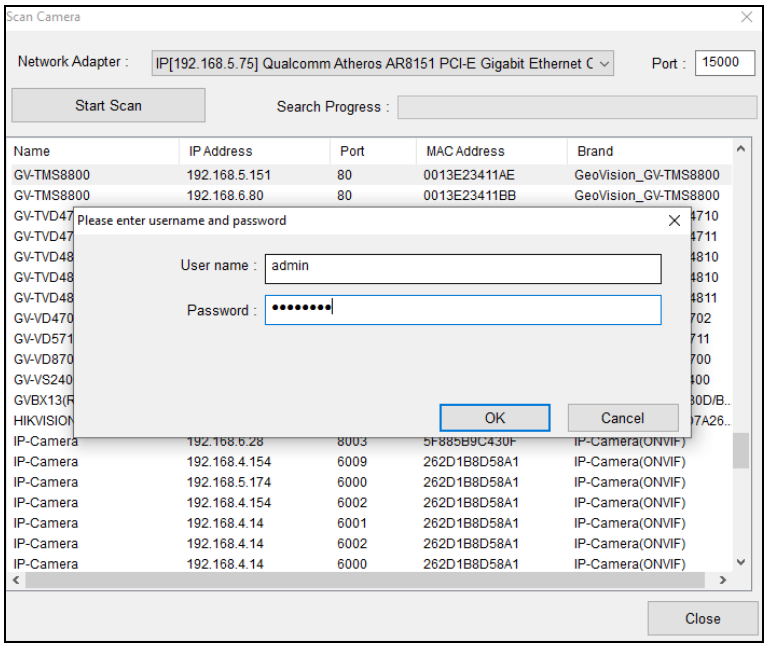

Figure 5-7

4. Click **OK**.
5. For **GV-TMS8800** only, select the desired channel. To fully display the live view of the camera, add the 2 channels one by one at a time.

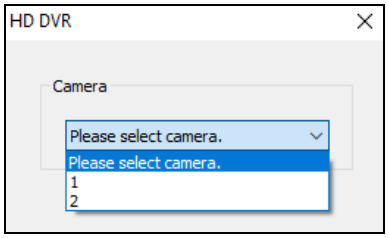

Figure 5-8

6. This dialog box appears.

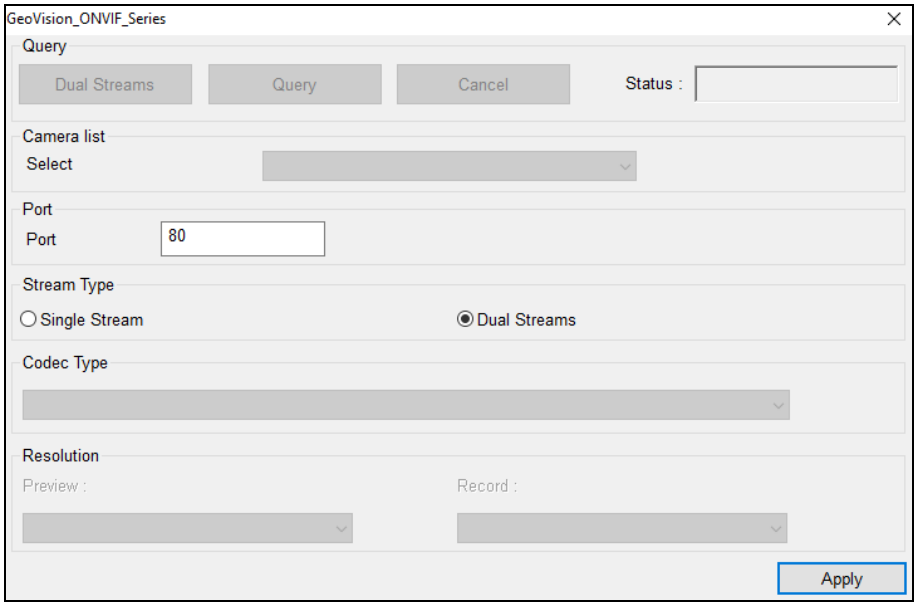

Figure 5-9

7. Click **Apply** to add the camera to the list.
8. To connect the added camera, click the box beside the **ID** column. Upon successful connection, the **Status** icon shows green, with the video resolution and bitrate being displayed in the correspondent columns.

ID	Status	Server address	Port	Video Resolution	Bitrate	Brand	Settings
1		192.168.0.22	80	2560X1440(H265) / 704X288(H264)	159 / 80 kbps	GeoVision GV-EBD4700(ONVIF)	

Figure 5-10

Appendix

A. RTSP Multicast Protocol Support

The camera allows video and audio streaming using the RTSP multicast protocol. To view camera images, use the following RTSP multicast command:

- In general:

rtsp://<IP>/media/<video#>/multicast

<IP> specifies the IP address of the camera.

<video#> specifies the main stream (1) or sub stream (2).

For example, to view the main stream of a camera, the command is as follows: rtsp:// 192.168.4.115/media/video1/multicast

- GV-TMS8800:

rtsp://<IP>/<media#>/<video#>/multicast

<IP> specifies the IP address of the camera.

<media#> specifies the channel number.

<video#> specifies the main stream (1) or sub stream (2).

For example, to view the channel No. 2 and the main stream of GV-TMS8800, the command is as follows: rtsp:// 192.168.4.115/media2/video1/multicast

B. RTSP Protocol Support

The camera allows video and audio streaming using the RTSP protocol. To view camera images, use the following RTSP command:

rtsp://<ID>:<Password>@<IP>/<media#>/<video#>

<IP> specifies the IP address of the camera.

<media#> specifies the channel number.

<video#> specifies the main stream (1) or sub stream (2).

For example, to view the channel No. 2 and main stream of GV-TMS8800, the command is as follows: rtsp://admin:admin@192.168.3.111/media2/video1

Note:

1. See *3.9.2 Network Security* for RTSP related settings on the Web interface.
2. Only VLC and QuickTime players are supported for video streaming via RTSP protocol.

C. HTTP Protocol Support

The camera supports HTTP protocol for accessing snapshots. To obtain a snapshot of the live view, type the following HTTP command on your Web browser:

http://<IP of the camera>/images/snapshot.jpg
For example, http://192.168.0.10/images/snapshot.jpg

When the Windows Security dialog box appears, type the camera's **user name** and **password** to receive the captured snapshot.

Note: See *3.9.2 Network Security* for HTTP related settings on the Web interface.

D. Compatible Versions of GV-VMS / DVR / NVR

Compatible versions of GV-VMS / DVR / NVR based on camera models are listed as follows:

Camera Model	Compatible GV-DVR / NVR	Compatible GV-VMS
GV-ABL2701 Series	V8.7.4.0 with patch files or later	V16.11.0.0 with patch files or later
GV-ABL2702	V8.7.4.0 with patch files or later	V17.1 with patch files or later
GV-ABL2703	V8.8.0 with patch files or later	V17.2.0 (no patch files required)
GV-ABL4701 Series	V8.7.4.0 with patch files or later	V16.11.0.0 with patch files or later
GV-ABL4703	V8.8.0 with patch files or later	V17.2.0 (no patch files required)
GV-ABL4711	V8.8.0 with patch files or later	V17.3.0 with patch files or later V18.1.1 with patch files or later
GV-ABL4712	V8.7.4.0 with patch files or later	V16.11.0.0 with patch files or later
GV-ABL8712	V8.7.4.0 with patch files or later	V17.1 with patch files or later
GV-ADR2701	V8.7.4.0 with patch files or later	V16.11.0.0 with patch files or later
GV-ADR2702	V8.8.0 (no patch files required)	V17.1.0.100 with patch files or later
GV-ADR4701	V8.7.4.0 with patch files or later	V16.11.0.0 with patch files or later
GV-ADR4702	V8.8.0 (no patch files required)	V17.1.0.100 with patch files or later
GV-AVD2700	V8.7.4.0 with patch files or later	V17.1 with patch files or later
GV-AVD4710	V8.7.4.0 with patch files or later	V16.11.0.0 with patch files or later
GV-AVD8710	V8.7.4.0 with patch files or later	V17.1 with patch files or later
GV-BLFC5800	V8.9.1 with patch files or later	V17.4.3 with patch files or later V18.2.1 with patch files or later
GV-EBD2702	V8.7.4.0 with patch files or later	V17.1 with patch files or later
GV-EBD2704	V8.9.1 with patch files or later	V17.4.1 with patch files or later V18.2.1 with patch files or later
GV-EBD2705	N/A	V17.4.7 or later V18.3.2 or later
GV-EBD4700	V8.7.3.0 with patch files or later	V16.11.0.0 with patch files or later
GV-EBD4701	V8.9.0 (no patch files required)	V17.4.0 (no patch files required) V18.1.1 with patch files or later
GV-EBD4704	V8.9.1 with patch files or later	V17.4.1 with patch files or later V18.2.1 with patch files or later
GV-EBD4711	V8.7.4.0 with patch files or later	V16.11.0.0 with patch files or later
GV-EBD4712	V8.9.0 (no patch files required)	V17.4.0 (no patch files required) V18.1.1 with patch files or later
GV-EBD4813	V8.9.1 with patch files or later	V17.4.2 with patch files or later V18.2.1 with patch files or later
GV-EBD8700	V8.8.0 with patch files or later	V17.1.0.100 with patch files or later
GV-EBD8711	V8.7.4.0 with patch files or later	V17.1 with patch files or later
GV-EBD8800	V8.9.1 with patch files or later	V17.4.1 with patch files or later V18.2.1 with patch files or later
GV-EBD8813	V8.9.1 with patch files or later	V17.4.1 with patch files or later V18.2.1 with patch files or later
GV-EBDP5800	V8.9.1A with patch files or later	V17.4.7 with patch files or later V18.3.2 with patch files or later

GV-EBDP8800	N/A	V17.4.7 or later V18.3.2 or later
GV-EBFC5800	V8.9.1 with patch files or later	V17.4.4 or later V18.2.1 with patch files or later
GV-TBL2703 Series	V8.8.0 with patch files or later	V17.3.0 with patch files or later
GV-TBL2705	V8.9.1 with patch files or later	V17.4.1 with patch files or later V18.2.1 with patch files or later
GV-TBL2706	N/A	V17.4.7 or later V18.3.2 or later
GV-TBL2718	N/A	V17.4.8 with patch files or later V18.3.4 with patch files or later
GV-TBL4700	V8.8.0 with patch files or later	V17.3.0 with patch files or later V18.1.1 with patch files or later
GV-TBL4703	V8.8.0 with patch files or later	V17.3.0 with patch files or later
GV-TBL4705	V8.9.1 with patch files or later	V17.4.1 with patch files or later V18.2.1 with patch files or later
GV-TBL4710	V8.8.0 with patch files or later	V17.1.0.100 with patch files or later
GV-TBL4711	V8.8.0 with patch files or later	V17.3.0 with patch files or later V18.1.1 with patch files or later
GV-TBL4807	V8.9.1A with patch or later	V17.4.7 with patch files or later V18.3.2 with patch files or later
GV-TBL4810	V8.9.1 with patch files or later	V17.4.2 with patch files or later V18.2.1 with patch files or later
GV-TBL8710	V8.8.0 with patch files or later	V17.1.0.100 with patch files or later
GV-TBL8804	V8.9.1 with patch files or later	V17.4.1 with patch files or later V18.2.1 with patch files or later
GV-TBL8810	V8.9.1 with patch files or later	V17.4.1 with patch files or later V18.2.1 with patch files or later
GV-TBLP5800	V8.9.1A with patch files or later	V17.4.7 with patch files or later V18.3.2 with patch files or later
GV-TBLP8800	N/A	V17.4.7 or later V18.3.2 or later
GV-TDR2700	V8.7.6.0 with patch files or later	V17.1.0.100 with patch files or later
GV-TDR2702	V8.8.0 with patch files or later	V17.3.0 with patch files or later
GV-TDR2704 Series	V8.9.1 with patch files or later	V17.4.1 with patch files or later V18.2.1 with patch files or later
GV-TDR2705	N/A	V17.4.7 or later V18.3.2 or later
GV-TDR4700 Series	V8.8.0 with patch files or later	V17.1.0.100 with patch files or later
GV-TDR4702	V8.8.0 with patch files or later	V17.3.0 with patch files or later
GV-TDR4703 Series	V8.9.0 (no patch files required)	V17.4.0 (no patch files required) V18.1.1 with patch files or later
GV-TDR4704 Series	V8.9.1 with patch files or later	V17.4.1 with patch files or later V18.2.1 with patch files or later
GV-TDR4803 Series	V8.9.1 with patch files or later	V17.4.2 with patch files or later V18.2.1 with patch files or later

GV-TDR8805	V8.9.1 with patch files or later	V17.4.4 or later V18.2.1 with patch files or later
GV-TFD4700	V8.9.1 with patch files or later	V17.4.1 with patch files or later V18.2.1 with patch files or later
GV-TMS8800	N/A	V17.4.8 with patch files or later V18.3.3 with patch files or later
GV-TFD4800	V8.9.1 with patch files or later	V17.4.5 or later V18.3.0 or later
GV-TVD2712	N/A	V17.4.8 with patch files or later V18.3.4 with patch files or later
GV-TVD4700	V8.8.0 with patch files or later	V17.3.0 with patch files or later V18.1.1 with patch files or later
GV-TVD4710	V8.8.0 with patch files or later	V17.1.0.100 with patch files or later
GV-TVD4711	V8.8.0 with patch files or later	V17.3.0 with patch files or later V18.1.1 with patch files or later
GV-TVD4810	V8.9.1 with patch files or later	V17.4.2 with patch files or later V18.2.1 with patch files or later
GV-TVD4811	V8.9.1 with patch files or later	V17.4.6 or later V18.3.2 or later
GV-TVD8710	V8.8.0 with patch files or later	V17.1.0.100 with patch files or later
GV-TVD8810	V8.9.1 with patch files or later	V17.4.1 with patch files or later V18.2.1 with patch files or later
GV-FER5702	N/A	V17.4.3 with patch files or later V18.2.1 with patch files or later
GV-PTZ5810-IR	V8.9.1 with patch files or later	V17.4.3 with patch files or later V18.2.1 with patch files or later

E. GV-Mount Dimensions

Dimensions of various GV-Mount are illustrated below:

GV-Mount Models	Dimensions
GV-Mount107	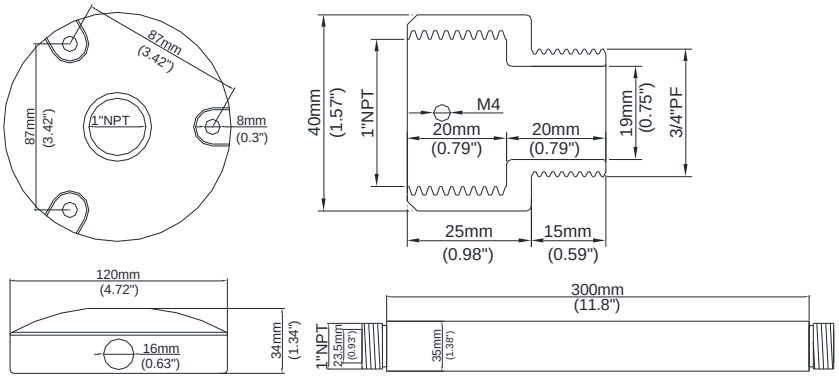
GV-Mount211-2	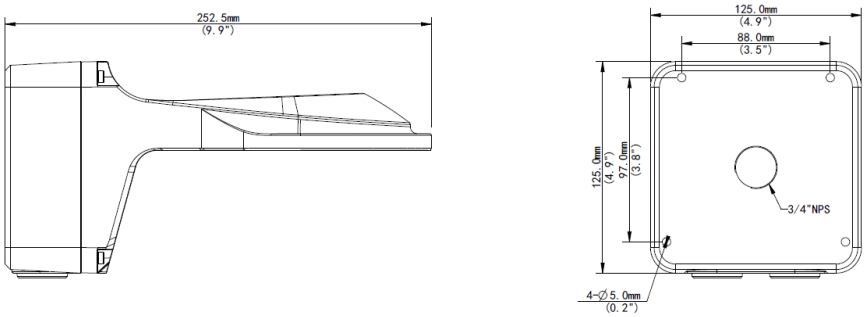
GV-Mount211P	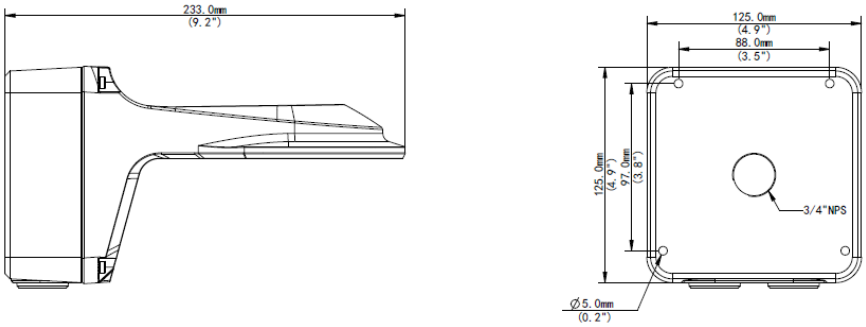
GV-Mount212-2	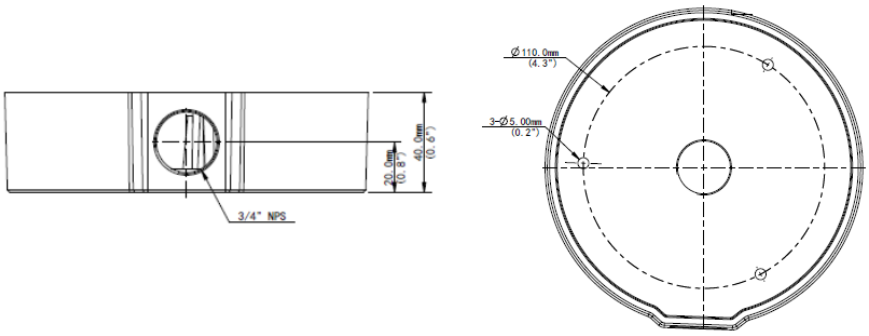

GV-Mount212P	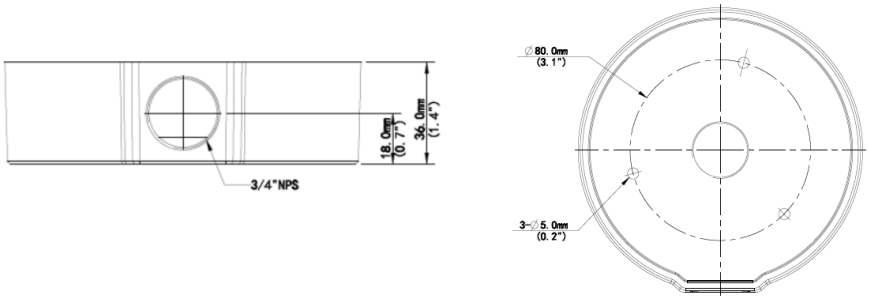
GV-Mount213	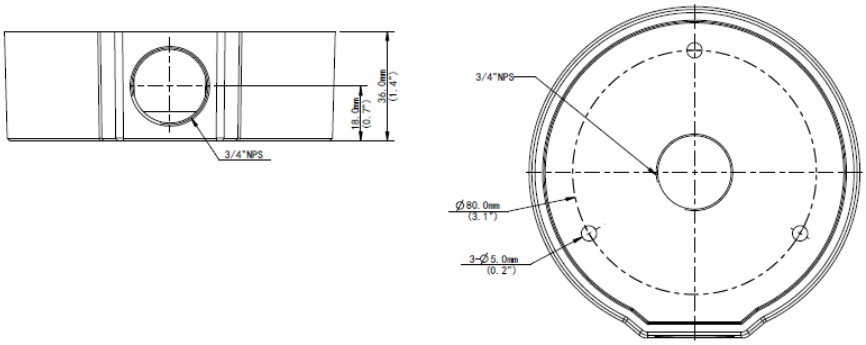
GV-Mount300-2	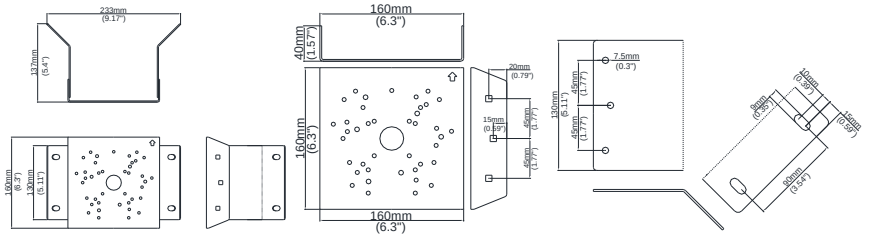
GV-Mount310-2	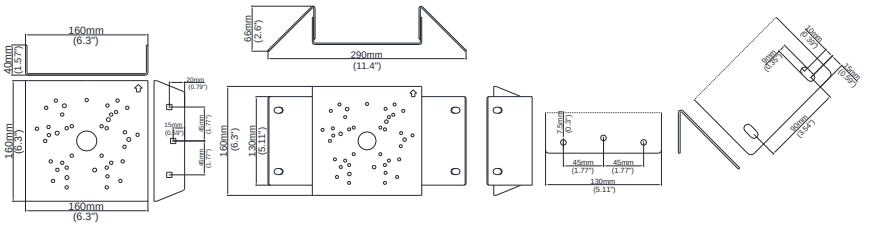
GV-Mount502	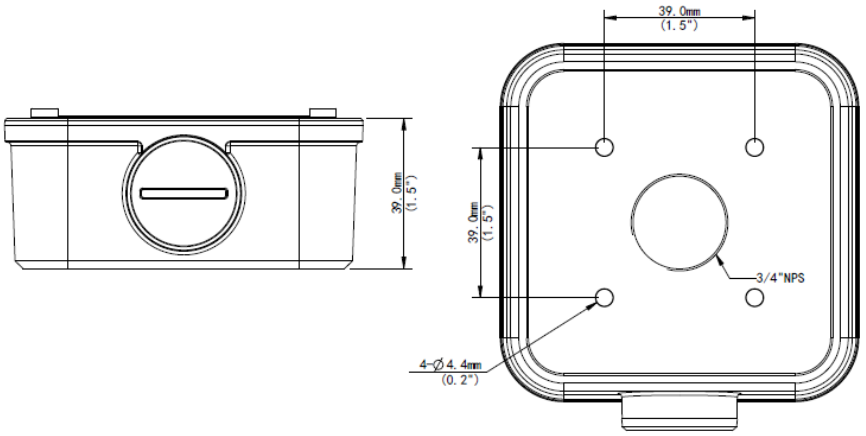

GV-Mount503	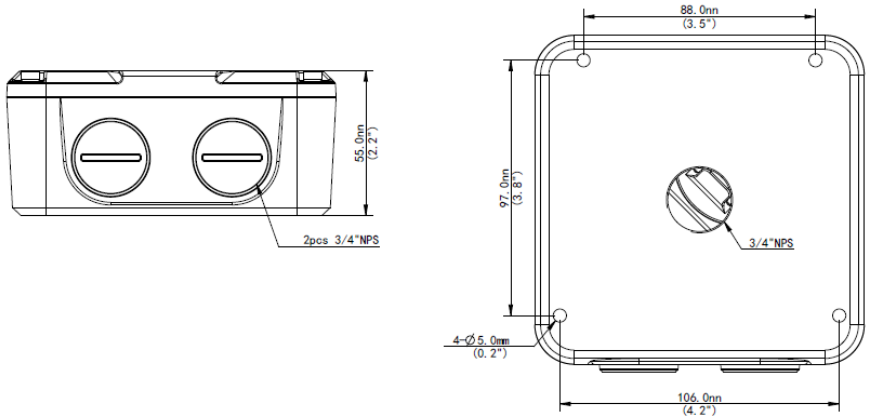
GV-Mount504	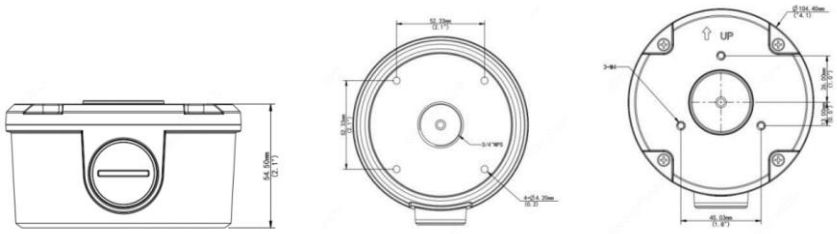
GV-Mount511	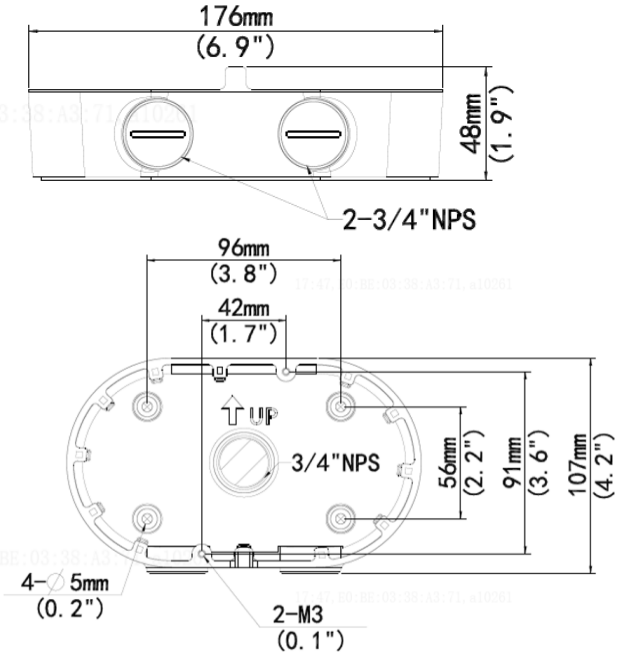
GV-Mount606	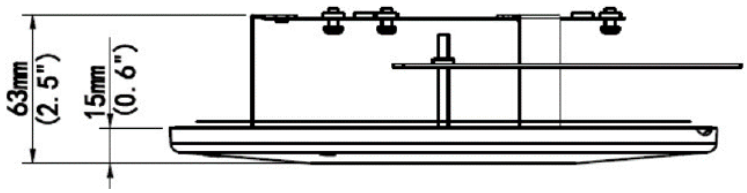

GV-Mount704 10 / 20 / 30 / 50 cm	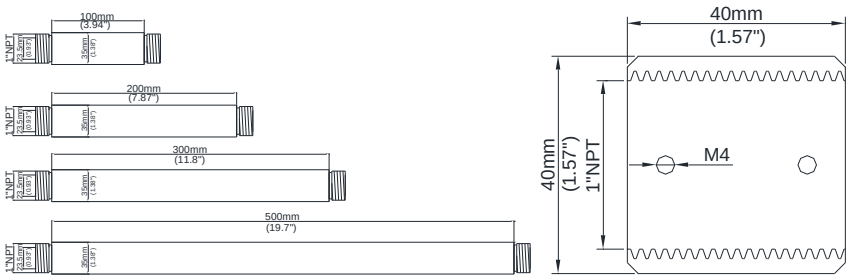

F. GV-Mount300-2 / 310-2

GV- Mount300-2

GV- Mount310-2

GV-Mount300-2 / 310-2 Packing List

• Mounting Bracket	• Convex Mounting Plate x 2 (for GV-Mount300-2) • Concave Mounting Plate x 2 (for GV-Mount310-2)
• Carriage Bolt x 6	• 1/4” Plain Washer x 6
• 1/4” Flange Nut x 6	• M4 Screw (25 mm) x 4
• M4 Plain Washer x 4	• M4 Flange Nut x 4
• M3 Screw (15 mm) x 4	• M3 Plain Washer x 4
• M3 Flange Nut x 4	

To install **GV-ABL / TBL Series, GV-ADR2702 / 4702, GV-AVD / TVD Series, GV-BLFC5800, GV-EBD Series, GV-EBFC5800, GV-PTZ5810-IR, GV-TDR Series, GV-TFD4700 / 4800,** and **GV-TBL2705 / TBL2706 / TBL4705 / TBL8804,** or directly on GV-Mount300-2 / 310-2, follow the instructions below.

1. Assemble the GV-Mount300-2 / 310-2, by attaching the two mounting plates onto the mounting bracket with the supplied carriage bolts, 1/4" plain washers, and 1/4" flange nuts.
2. Thread the camera wires through the hole in the center of the mounting bracket.
3. Position the base of your camera according to the enclosed *Screw Position Chart*.
4. Attach the camera onto the mounting bracket.
   A. For **GV-EBD2702 / 2704 / 4700 / 4701 / 4704 / 8700 / 8800 and GV-EBFC5800**
   Remove the camera housing and attach the camera base to the mounting bracket with the supplied M3 screws, washers, and flange nuts. See similar installation in Step 3 ~ 6*, 1.1.4.1 GV-EBD2702 / 2704 / 4700 / 4701 / 4704 / 8700 / 8800 Standard Installation*.
   B. For **GV-EBD4711 / 4712 / 4813 / 8711 / 8813, GV-EBDP5800 / 8800, GV-PTZ5810-IR**
   Remove the camera housing and attach the camera base to the mounting bracket with the supplied M3 screws, washers, and flange nuts. See similar installation in Step 3 ~ 6*, 1.1.4.2 GV-EBD4711 / 4712 / 4813 / 8711 / 8813 Standard Installation*.
   C. For **GV-ABL / TBL Series & GV-BLFC5800** (Not applicable to **GV-TBL2705 / 4705 / 8804**)
   Attach the camera to the mounting bracket with the supplied M4 screws, washers, and flange nuts.
   D. For **GV-ADR2702 / 4702 / GV-TDR Series / GV-TFD4700 / 4800**
   Attach the camera to the mounting bracket with the supplied M3 screws, washers, and flange nuts. Close and secure the camera housing.
   E. For **GV-AVD / TVD Series**
   Remove the camera housing and attach the camera base to the mounting bracket with the supplied M4 screws, washers, and flange nuts. See similar installation in Step 3 ~ 4*, 1.4.4 Installation*.
5. Secure the assembled GV-IP Camera and GV-Mount300-2 / 310-2 to the wall with the 4 self-prepared screws with the arrow pointing up.

To install **GV-TBL2705 / TBL4705 / TBL8804,** on GV-Mount300-2 / 310-2 with GV-Mount504, follow the instructions below.

1. Assemble the GV-Mount300-2 / 310-2, by attaching the two mounting plates onto the mounting bracket with the supplied carriage bolts, 1/4” plain washers, and 1/4” flange nuts.
2. Detach the upper cover of GV-Mount504.
3. Secure the base of GV-Mount504 to GV-Mount300-2 / 310-2 based on the following holes.

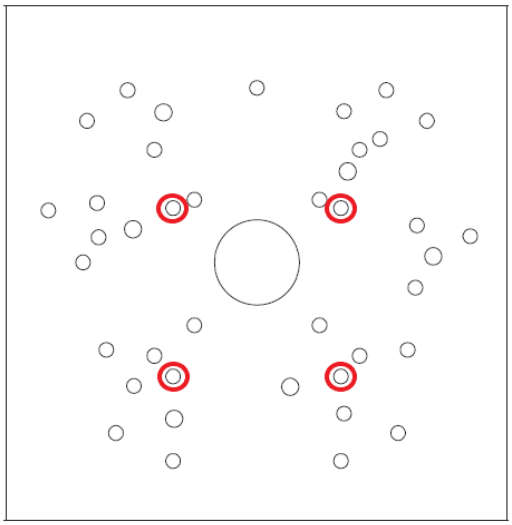

4. Secure the camera to the upper cover of GV-Mount504.
5. Assemble the upper cover of GV-Mount504 to its base and thread the wires through the center of GV-Mount504.
6. Secure the assembled GV-IP Camera, GV-Mount300-2 / 310-2, and GV-Mount504 to the wall with the 4 self-prepared screws with the arrow pointing up.

To install **GV-Mount211P / 211-2 / 212-2 / 212P / 213 / 502 / 503** on GV-Mount300-2 / 310-2

1. Assemble the GV-Mount300-2 / 310-2, by attaching the two mounting plates onto the mounting bracket with the supplied carriage bolts, 1/4” plain washers, and 1/4” flange nuts.
2. Position and secure GV-Mount211P / 211-2 / 212-2 / 212P / 213 / 502 / 503 to GV-Mount300-2 / 310-2 as instructed on the enclosed *Screw Position Chart*.
3. Secure your GV-IP Camera to the GV-Mount211P / 211-2 / 212-2 / 212P / 213 / 502 / 503 to complete the installation.

Note: For details on attaching your GV-IP Camera to GV-Mount211P / 211-2 / 212-2 / 212P / 213 / 502 / 503 / 504, see optional installations in *Chapter 1 Introduction*.

G. Screw Position Chart

	Screws:M4*25 GV-Mount502 GV-TBL2703/4703 GV-ABL2701/4701/2703/4703	Screws:M4*25 GV-Mount503 GV-Mount211P GV-Mount211-2	Screws:M4*25 GV-Mount212-2	Screws:M4*25 GV-Mount212P	Screws:M4*25 GV-Mount213
	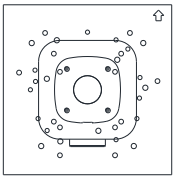	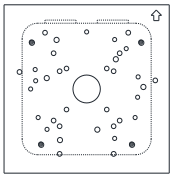	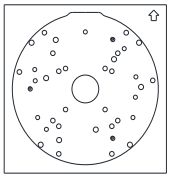	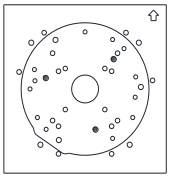	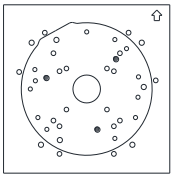
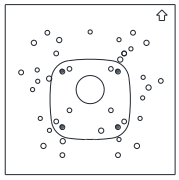	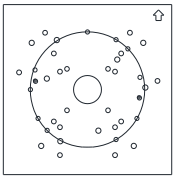	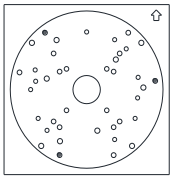	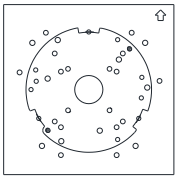	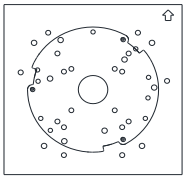	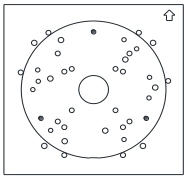
Screws:M4*25 GV-ABL2702/4711/4712/8712 GV-TBL4700/4710/4711/4810 /8710/8810	Screws:M3*15 GV-ADR2702/4702 GV-TFD4700 GV-TDR2700/2702/2704/4700/ 4702/4703/4704/4803	GV-AVD2700/4710/8710 GV-TVD4700/4710/4711/4810/8710/8810	Screws:M3*15 GV-EBD2702/2704	Screws:M3*15 GV-EBD4700/4701/4704/8700/8800	Screws:M3*15 GV-EBD4711/4712/4813/8711/8813
If you cannot find the desired camera model, please visit our website for more information.					

H. Note for Fisheye Camera with IR LED

When installing Mount107 / 211P / 212P to your GV-FER5702, leave a distance of 1 M (3.28 ft) or more between the camera body and nearby walls to avoid reflected glare by IR LED.

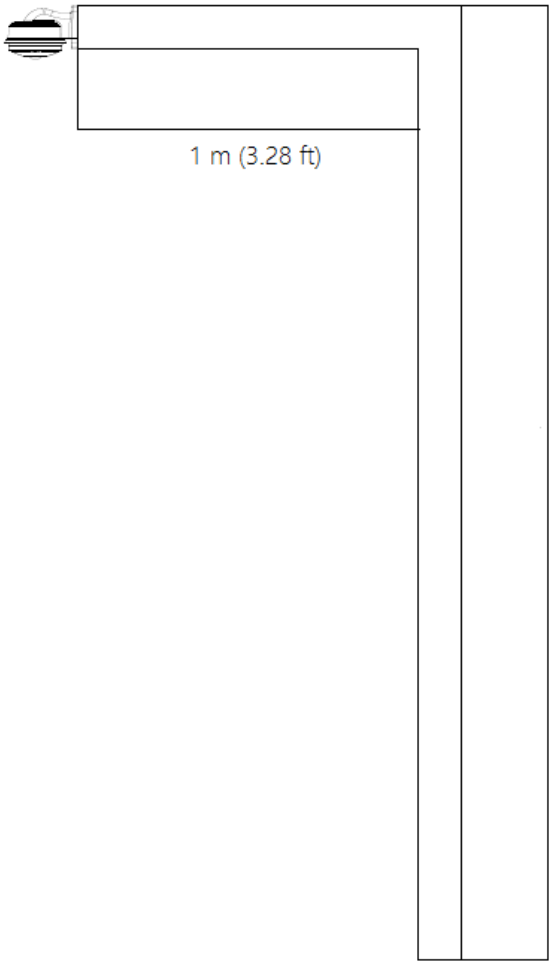

I. Retrieve Camera's Password

You can collect required information and contact our support teams to retrieve your camera's password. Refer to the instructions here.

J. Installation Guidelines for Perimeter Protection

To use the functions of **Cross Line**, **Intrusion Detection**, **Enter Area**, and **Leave Area**, which is only supported by AI-capable cameras, it is recommended to install the camera according to the criteria listed below:

Lighting Requirements

1. Lighting at the site must be greater than 50 lux.
2. Lighting at the site must be even and stable.

Environmental Requirements

3. Mount height: 3 ~ 6 meters.
4. Monitoring distance: 6 ~ 30 meters.
5. Coverage width: 10 ~ 20 meters with a maximum of 30 meters.
6. Avoid strong backlight or front light in outdoor scenes.
7. Avoid scenes with strobe or flash illuminators in outdoor scenes.

Note: The mount height, monitoring distance and coverage width are all affected by the object pixel. For motor vehicle/non-motor vehicle/pedestrian, 200 pixels or more is recommended, and it must not be lower than 100 pixels.

Surveillance Illustration

H: Mount height; L: Capture distance; W: Coverage width

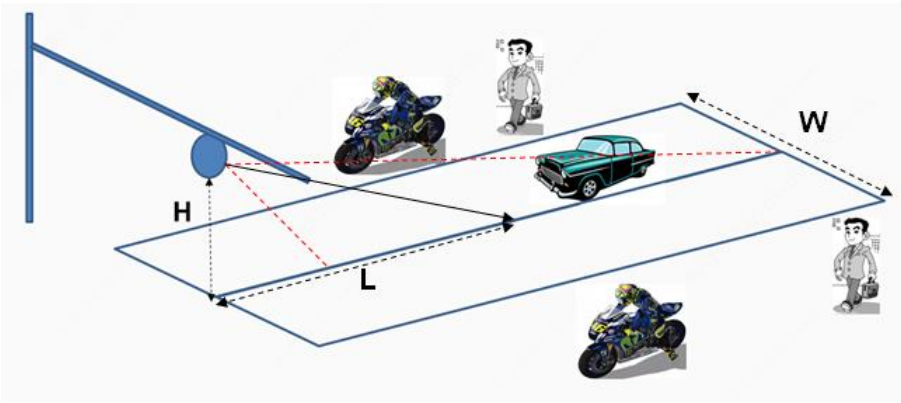

Recommended Scenes

Clear background, even lighting, and installation angle meets the requirement.

Note Recommended Scenes

Complex perimeter, bad environment; large top view angle, causing objects hard to recognize; uneven lighting.

Image Configuration

Use the default parameters of Starlight or Common scene.

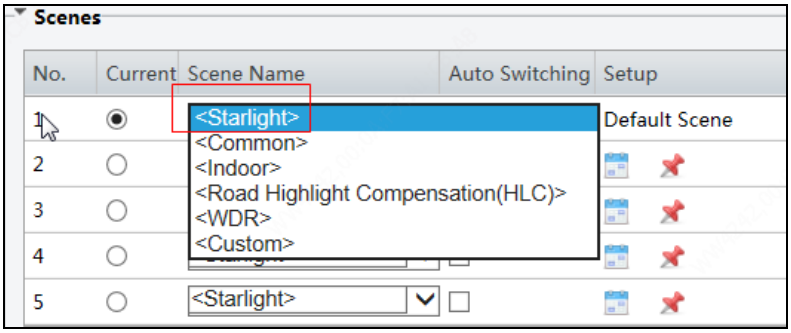

K. Installation Guidelines for People Flow Counting

To use the People Flow Counting function, which is only supported by AI-capable cameras, it is recommended to install the camera according to the criteria listed below:

Installation Considerations

1. It is recommended to install the camera at a height of 4 ~ 9 meters (13.1 ~ 29.5 ft) when the overhead angle of the camera is 30°~60°, and the effective monitoring width is between 1 ~ 8 meters (3.3 ~ 26.2 ft).
2. It is recommended to install the camera at a height of 3 ~ 5 meters (9.8 ~ 16.4 ft) when the overhead angle of the camera is 60°~90°, and the effective monitoring width is between 1 ~ 5 meters (3.3 ~ 16.4 ft).
3. Avoid areas that may affect accuracy as far as possible, such as in the detection area there are leaf shaking interference, serious shadow shaking, glass floor tile reflective scenes.
4. If the flow of people in the area is too dense and stagnant, if there is a block on the head, it will have an impact on the index. Such scenes should be avoided as far as possible in the detection area.
5. The camera should be well fixed, unable to move or shake.
6. Input image aspect ratio is required to be 16:9.
7. It does not support infrared scenes, strong backlight, dim scenes and night light changing scenes, etc.
8. The scene with reflection is not supported, which will cause more false detections. It is recommended to adjust the camera angle to eliminate the reflection.
9. When there is unusual weather such as rain, snow and fog, the scene indicators will be greatly affected.
10. All functions are not suitable for scenes with more occlusion and interference.

11. When adjusting the monitoring range and setting business rules, attention should be paid to the pixel size of pedestrian head and shoulder. When the resolution is 1920 x 1080, the pixel size requirements of head and shoulder are: lower limit: 55 x 55; upper limit: 180 x 180; best: 65 x 65 ~ 160 x 160, and other dimensions are converted according to the proportion of single side length of the picture.

Resolution Ratio	Recommended Min. Pixel	Recommended Max Coverage (width x depth)
1920 x 1080	65 x 65	12 m x 10 m
2560 x 1440	90 x 90	12 m x 10 m
3840 x 2160	130 x 130	12 m x 10 m

Recommended Scenes

People Flow Counting applicable scenarios: The entrances and exits of shopping malls, parks, squares, escalators, and other places; passages and gates of railway stations and subways. The scene is relatively clean, with few people present and no light, leaves shaking, shadow, or other interference.

Not Recommended Scenes

1. The scene where many people gather in the room and basically stop moving.
2. There are umbrellas in rainy days.
3. The pixels from heads to shoulders of some people occupy too many pixels in the image, which cannot meet the pixel requirements.
4. The screen is too dark, and the installation height falls short of the required height.
5. The camera installation location is too far from the horizontal distance of the escalator, which does not meet the requirement of 0.5 ~ 2 m.
6. The installation position of the camera is tilted, and the detection box is horizontally tilted, which affects the recognition rate.

L. Installation Guidelines for Crowd Density Monitoring

To use the Crowd Density Monitoring function, which is only supported by AI-capable cameras, it is recommended to install the camera according to the criteria listed below:

Installation Considerations

1. The scene should be open, wide, without shielding interference and non-dense crowd.
2. The effective monitoring width is affected by the depression angle of the camera and the installation height. The higher the installation height, the larger the monitoring range; The larger the depression angle of the camera, the smaller the monitoring scope.

Recommended Scenes

Crowd Density Monitoring is applicable to squares, open places, shelters and places with less Interference and non-dense population.

Not Recommended Scenes

1. The camera installation height is low, and the depth of the scene is too deep (that is, the People Flow Counting scene should not be used for the Crowd Density Monitoring).
2. The distance is too far, the target is too small.

Note: People Flow Counting is applicable to places such as squares and open places. Crow Density Monitoring is applicable to places such as roads, entrances and exits.

Installation Requirements

1. Installation height: It is recommended between 6 ~ 10m
2. Installation position: it is installed in the place with wide vision to avoid backlighting and many light interferences.
3. The camera depression angle: Between 30 ° ~ 80 °, the best angle is 45 ° ~ 75 °

4. Monitoring range: It is related to the focal length and installation height of different lenses. The target size shall meet the requirements of head and shoulder size.

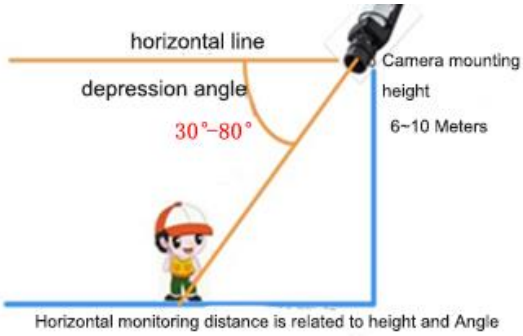

M. Installation Guidelines for Face Detection

To use the Face Detection function, which is only supported by AI-capable cameras, it is recommended to install the camera according to the criteria listed below:

Lighting Requirements

1. Select a bright scene (with light no less than 100 lux). Scenes with wide dynamic range and backlight are not recommended.
2. Lighting at the site must be even and stable.

Note: Illuminators are required if the natural lighting in the scene is lower than 100 lux.

Environmental Requirements

1. Mount height: 2.5 ~ 4.5 m.
2. Capture distance: 3 ~ 15 m.
3. Angle: It is recommended to install the camera right in front of the passageway, with horizontal deflection angle ≤30°, the top view angle ≤15° (≤10° is recommended).
4. Surveillance coverage width:

   4MP IPC: ≤4.5m

   8MP IPC: ≤6m
5. In outdoor scenes, avoid installing in an east-west direction (avoid strong backlight or front light).
6. Install the camera in a bright spot to capture people coming from the dark for installations at a passageway, entrance or exit, etc.

Note: The surveillance coverage width of the camera is determined by face pixel. It is recommended that the minimum face pixel is no less than 80.

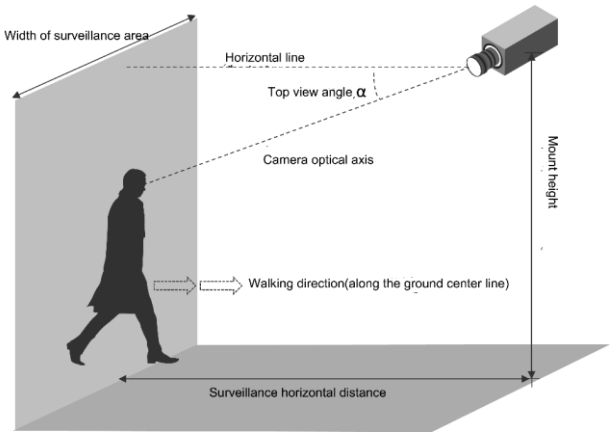

Recommended Scenes

Face Detection is applicable to turnstile passageway, indoor passageway, and outdoor sidewalk.

Not Recommended Scenes

1. **Crossroads, turns, and zebra crossings** where faces are not captured from the front
2. **Tilted mount** with an excessively large face deflection angle
3. **Dark scenes** in which faces are not clear enough
4. **Super wide-angle scenes** with insufficient face pixel
5. **Scenes with LED screens** in which lighting is unstable due to the LED screen

Special Scenes

1. **Scenes with WDR or strong backlight:** Use curtains or a double-glazed door to avoid WDR or strong backlight.
2. **Scenes with strong reflection on the ground:** Avoid strong light reflections on the ground by laying carpets on the floor or setting up screens.

Note: For special scenes, assessment must be done thoroughly during survey to determine whether solutions can be fully implemented. Scenes that cannot be fully implemented shall be avoided; otherwise, image quality and capture results may not be satisfactory.

Image Configuration

1. Scenes

Scenes: Starlight

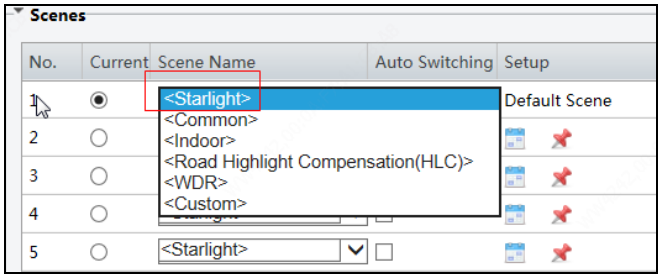

2. Exposure Parameters

- **Exposure Mode:** Select Custom.
- **Shutter(s):** 1/100-1/200 is recommended for the upper limit. Set appropriately according to the face movement speed.
- **Gain**: It is recommended to set the upper limit to 40. Set appropriately according to the brightness of face.
- **Metering Control**: Select Face Metering.
- **Face Brightness:** 50 is recommended. Set appropriately if the captured face is too dark or overexposed.
- **Min. Duration(min):** 5 is recommended. Set appropriately as required.

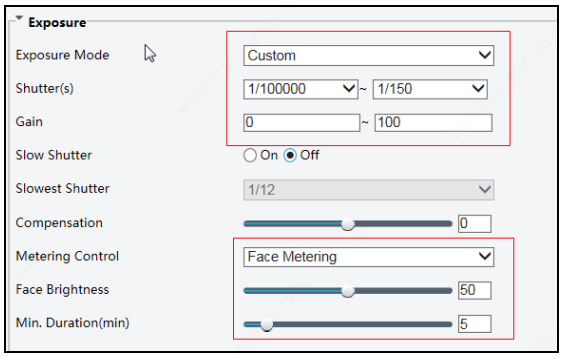

N. Installation Guidelines for Face Detection (Non-AI)

To use the camera's built-in face detection feature (see *3.6.1.7 Face Detection*), which is only supported by certain models, it is recommended to install the camera according to the criteria listed below:

Surveillance Condition

- The camera shall be installed at a site with uniform, sufficient lighting, where the face(s) to be detected are fully illuminated.

Example of Recommended Scene	Example of Non-recommended Scene
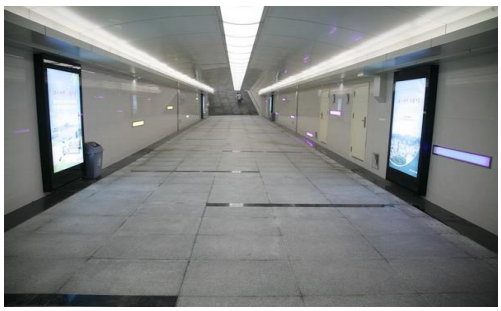	

Camera Position

- The camera shall be mounted at a recommended height of 2.5 ~ 3 m (8.2 ~ 9.84 ft).
- The camera shall be mounted with a recommended depression angle of around 10°.
- The camera shall be positioned so that the face(s) to be detected are directly aligned with the lens of the camera, with a horizontal deviation of no greater than 30°, a vertical deviation of no greater than 15° and a face size of at least 120 pixels.

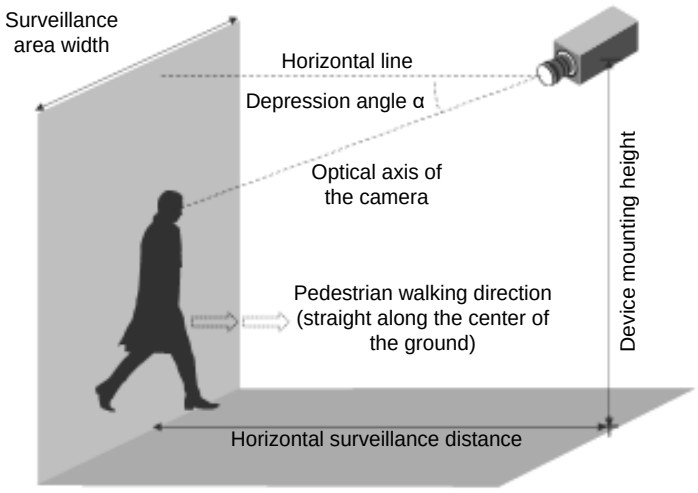

O. Installation Guidelines for People Counting (Non-AI)

To use the camera's built-in people counting feature (see *3.6.1.8 People Counting*), which is only supported by certain models, it is recommended to install the camera according to the criteria listed below:

Surveillance Condition

- The camera shall be installed at a site with uniform, sufficient lighting, where the person(s) to be counted are fully illuminated.
- The camera shall be installed at an entrance or exit with an ideal width of 1 ~ 4 m (3.28 ~ 13.12 ft), where the persons(s) to be counted move toward the lens of the camera in single file.

Example of Recommended Scene	Example of Non-recommended Scene

Camera Position
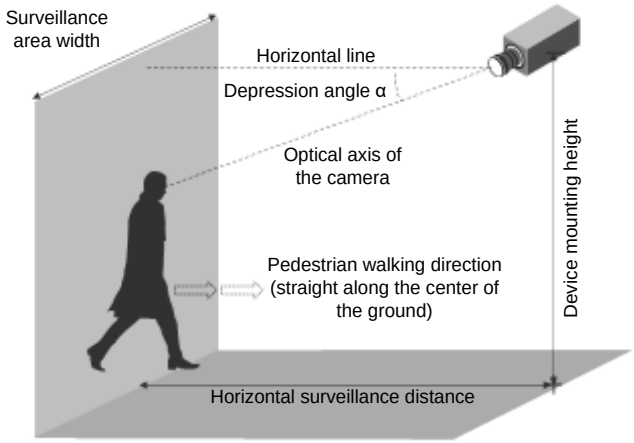
- The camera shall be mounted at a recommended height of 3 ~ 5 m (9.84 ~ 16.4 ft).
- The camera shall be mounted with a recommended depression angle of 70 ~ 80°.
- The camera shall be positioned so that the person(s) to be counted face toward the lens of the camera and are displayed on the image with a shoulder size of between 120 ~ 160 pixels.