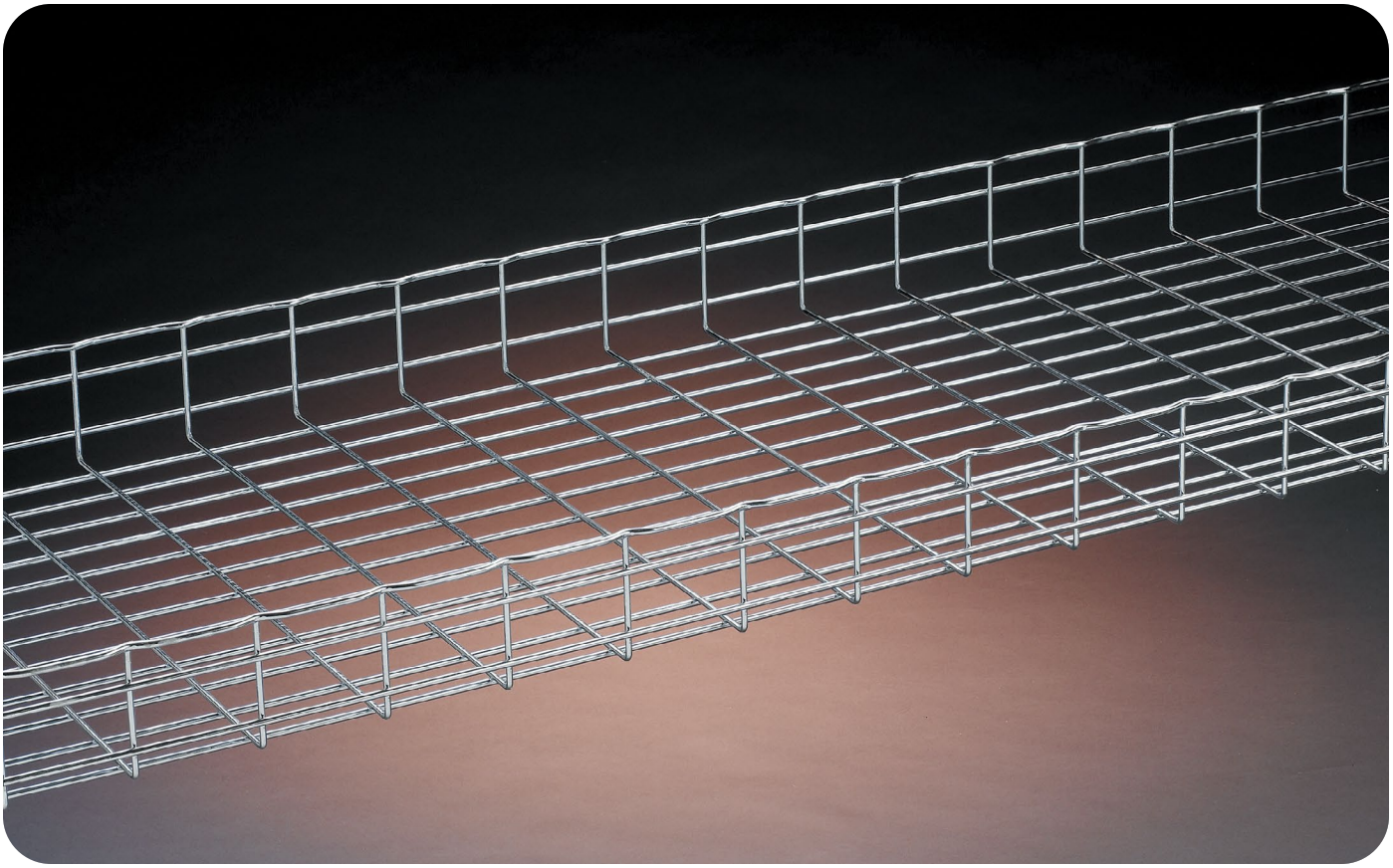

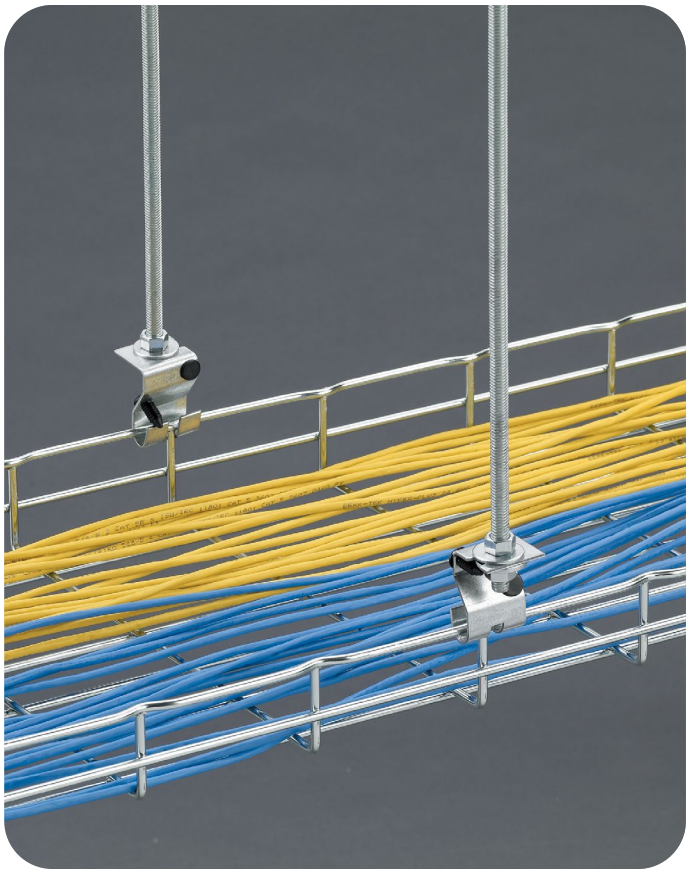

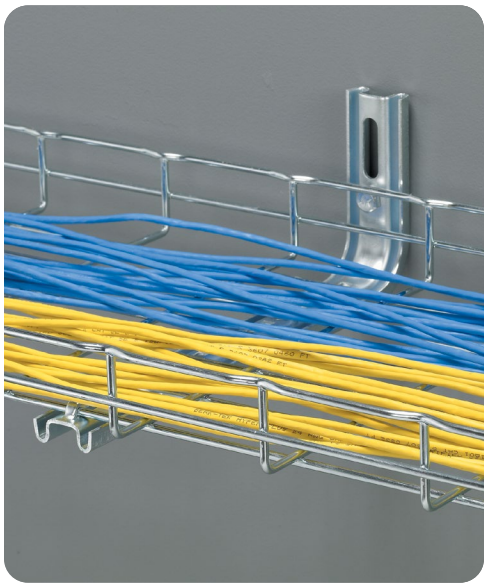

The Flextray™ system is a flexible, field-adaptable way to manage cables throughout your project. The tray can be cut and bent to the needs of the installer on the jobsite, allowing cable runs to be adjusted as needed. The wide range of sizes offered makes Flextray a great choice for everything from a small cable drop to a large trunk of cables. Our tray has the market-preferred "T" weld safety edge, protecting both the cable and the installer during cable installation. Flextray is also UL Classified as an equipment grounding conductor.

Finish Information

Flextray cable tray and accessories are available in a wide variety of finishes to meet the environmental or aesthetic requirements of customer installations. Use the list below to find the finish and suffix that will meet your needs.

Available product finishes will be listed on individual pages throughout the catalog.

Finish codes shown in **bold** type are the standard for that product.

Plain wire: ASTM A510, Grade 1008

EG (ELG)
Electroplated zinc galvanized finish applied after fabrication
Recommended applications: Controlled interior
UL/CSA Classified as an equipment ground conductor when spliced as recommended
ASTM B633 - Average thickness of 0.3 mils (8 microns)

GS (GLV)
Pre-galvanized zinc finish applied before fabrication
Recommended applications: Limited industrial & interior
UL/CSA Classified as an equipment ground conductor when spliced as recommended
ASTM A641

BLE
Black powder coat finish applied after fabrication
Recommended applications: Controlled interior
UL/CSA Classified as an equipment ground conductor when coating has been removed at splice contact points
Average paint thickness of 1.2 mils (30 microns) to 3.0 mils (75 microns)

HD (HDG)
Hot dip galvanized finish applied after fabrication
Recommended applications: Exterior, corrosive. Not intended for clean room applications.
UL/CSA Classified as an equipment ground conductor when spliced as recommended
ASTM A123 - Average thickness of 2.4 mils (60 microns) to 3.2 mils (80 microns)

304S (SS4)
304L Stainless steel
Recommended applications: Food preparation, wash-down areas
ASTM A580

316S (SS6)
316L Stainless steel
Recommended applications: Highly corrosive applications & marine environments
ASTM A580

Custom powder coat finish applied after fabrication
Recommended applications: Controlled interior
UL/CSA Classified as an equipment ground conductor when coating has been removed at splice contact points
No Specification

Grounding Information

Statement for all UL Classified products:

This product is classified by Underwriters Laboratories, Inc. as to its suitability as an equipment grounding conductor only. 556E

Most sizes of the Flextray system are UL Classified to serve as an Equipment Ground Conductor. The ground path can be achieved in one of two ways listed on page D-4:

Grounding Information (cont.)

1. Use the recommended quantity of UL Classified splices to connect sections and at places where the tray is cut.
2. Run an appropriately sized ground wire alongside the tray and attach it to each tray section and on both sides of a cut in the tray. (This method is recommended by NEMA VE-2 Installation Manual.)

Load & Fill Chart

Flextray Series Part Number	Size height x width	Support Span / Loading Capacity* Lbs/Ft (max) 5'-0"	6'-0"	7'-0"	8'-0"	Cable Fill (50% fill)** Actual Area Inside Tray (in²)	Number of CAT 5e Cables***	Number of CAT CAT 6 Cables***	Number of CAT CAT 6A Cables***
FT2X2	2" x 2"	34	28	24	20	4.3	61	43	33
FT2X4	2" x 4"	52	43	35	27	8.2	118	83	64
FT2X6	2" x 6"	66	47	35	27	12.1	175	123	95
FT2X8	2" x 8"	66	47	35	27	16.1	231	163	125
FT2X12	2" x 12"	68	47	35	27	23.9	345	243	187
FT2X16	2" x 16"	68	47	35	27	31.8	459	324	249
FT2X18	2" x 18"	68	47	35	27	35.8	516	364	280
FT2X20	2" x 20"	68	47	35	27	39.7	573	404	311
FT2X24	2" x 24"	68	47	35	27	47.5	686	484	372
FT2X30	2" x 30"	68	47	35	27	59.8	862	608	468
FT2X32	2" x 32"	77	53	39	30	63.3	914	645	496
FT4X4	4" x 4"	58	49	42	36	15.8	227	160	123
FT4X6	4" x 6"	93	77	60	46	23.6	341	240	185
FT4X8	4" x 8"	94	78	61	47	31.5	454	321	247
FT4X12	4" x 12"	119	83	61	47	47.5	686	484	372
FT4X16	4" x 16"	119	83	61	47	63.5	917	647	498
FT4X18	4" x 18"	119	83	61	47	71.5	1032	728	560
FT4X20	4" x 20"	119	83	61	47	79.5	1148	810	623
FT4X24	4" x 24"	128	89	65	50	95.5	1379	973	749
FT4X30	4" x 30"	128	89	65	50	119.5	1725	1217	936
FT6X8	6" x 8"	111	77	57	43	47.3	682	481	370
FT6X12	6" x 12"	124	86	63	48	71.6	1034	729	561
FT6X16	6" x 16"	128	89	65	50	95.3	1375	970	746
FT6X18	6" x 18"	128	89	65	50	107.3	1549	1092	840
FT6X20	6" x 20"	141	98	72	55	118.9	1716	1211	932
FT6X24	6" x 24"	154	107	78	60	143.3	2068	1459	1123

* Published load chart has not been tested with Flexmate™ splice. Please consult the factory for load information when using the Flexmate option.

** Flextray fill capacity is based on NEC allowable fill of 50%. The NEC rule requires that the cable cross-sectional areas together may not exceed 50% of the tray area (width x depth = fill). Cables will nearly completely fill the cable tray when reaching the 50% cable fill, due to empty space between the surface of the cables. TIA recommends 40% fill ratio. Flextray loads shown in the loading chart will not be exceeded at 50% fill.

*** CAT 5e 4-pr non-plenum approximated at .21 in. diameter, CAT 6 4-pr non-plenum approximated at .25 in. diameter, CAT 6A approximated at .285 diameter. Actual diameters vary by cable manufacturer.

2" Deep Flextray

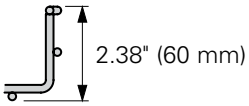

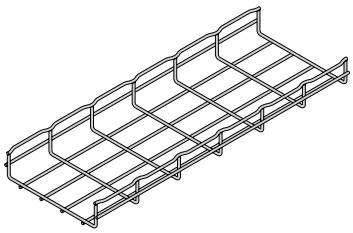

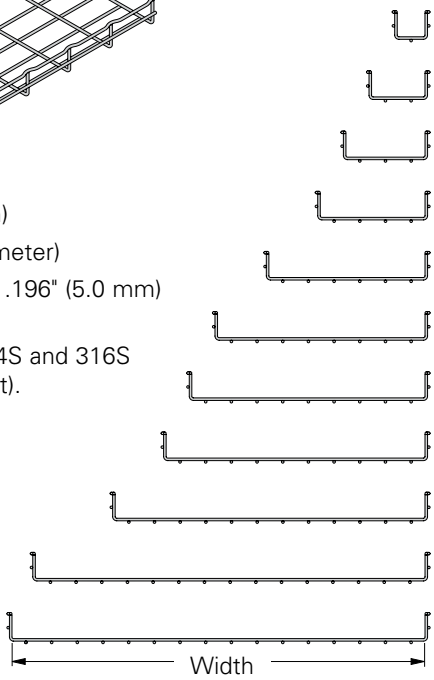

Height: 2.38" (60 mm)
Length: 118.312" (3 meter)
Wire Dia. Minimum: .196" (5.0 mm)
Finishes:
EG, **BLE** (GS, HD, 304S and 316S available upon request).

Part Number	Width in. (mm)	Wt. Per Piece lbs. (kg)	UL Marking
FT2X2X10	2 (50)	6.6 (2.99)	None
FT2X4X10	4 (100)	8.2 (3.72)	None
FT2X6X10	6 (150)	9.7 (4.40)	.20IN^2
FT2X8X10	8 (200)	11.2 (5.08)	.20IN^2
FT2X12X10	12 (300)	14.3 (6.48)	.20IN^2
FT2X16X10	16 (400)	17.4 (7.89)	.20IN^2
FT2X18X10	18 (450)	18.9 (8.57)	.20IN^2
FT2X20X10	20 (500)	20.4 (9.25)	.40IN^2
FT2X24X10	24 (600)	23.5 (10.66)	.40IN^2
FT2X30X10	30 (750)	28.1 (12.74)	.40IN^2
FT2X32X10	32 (800)	29.7 (13.47)	.40IN^2

FT2X6 (6" wide) through FT2X32 (32" wide) are UL Classified

See page D-3 for finish information

4" Deep Flextray

Part Number	Width in. (mm)	Wt. Per Piece lbs. (kg)	UL Marking
FT4X4X10	4 (100)	11.25 (5.10)	.20IN²
FT4X6X10	6 (150)	12.79 (5.80)	.20IN²
FT4X8X10	8 (200)	14.32 (6.49)	.20IN²
FT4X12X10	12 (300)	17.39 (7.89)	.20IN²
FT4X16X10	16 (400)	20.45 (9.27)	.40IN²
FT4X18X10	18 (450)	21.99 (9.97)	.40IN²
FT4X20X10	20 (500)	23.52 (10.67)	.40IN²
FT4X24X10	24 (600)	26.59 (12.06)	.40IN²
FT4X30X10	30 (750)	31.19 (14.15)	.40IN²

All 4" deep Flextrays are UL Classified

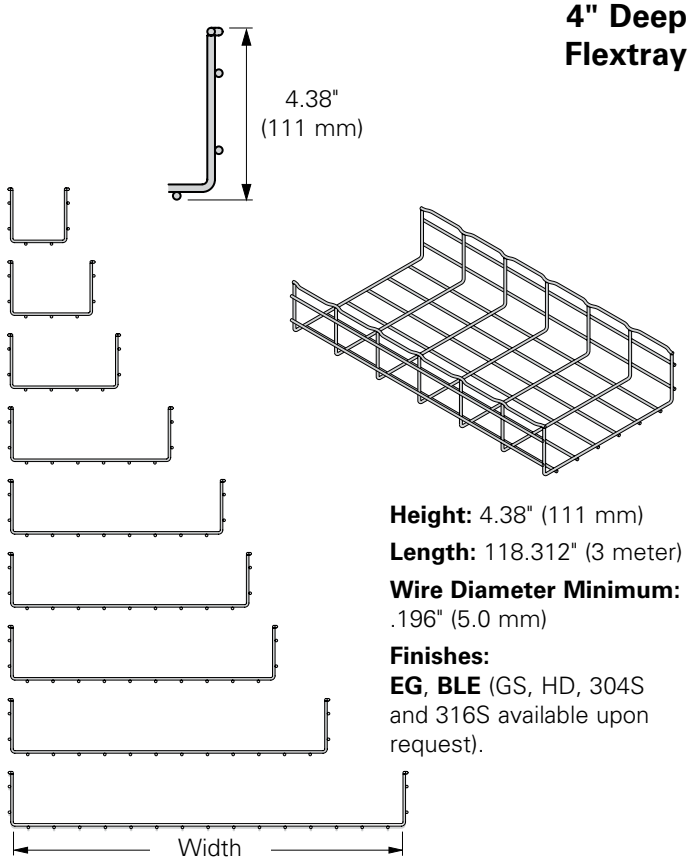

Height: 4.38" (111 mm)

Length: 118.312" (3 meter)

Wire Diameter Minimum: .196" (5.0 mm)

Finishes:
EG, **BLE** (GS, HD, 304S and 316S available upon request).

6" Deep Flextray

Part Number	Width in. (mm)	Wt. Per Piece lbs. (kg)	UL Marking
FT6X8X10	8 (200)	17.39 (7.89)	.20IN²
FT6X12X10	12 (300)	20.45 (9.27)	.40IN²
FT6X16X10	16 (400)	23.52 (10.67)	.40IN²
FT6X18X10	18 (450)	25.06 (11.37)	.40IN²
FT6X20X10	20 (500)	26.59 (12.06)	.40IN²
FT6X24X10	24 (600)	29.66 (13.45)	.40IN²

All 6" deep Flextrays are UL Classified

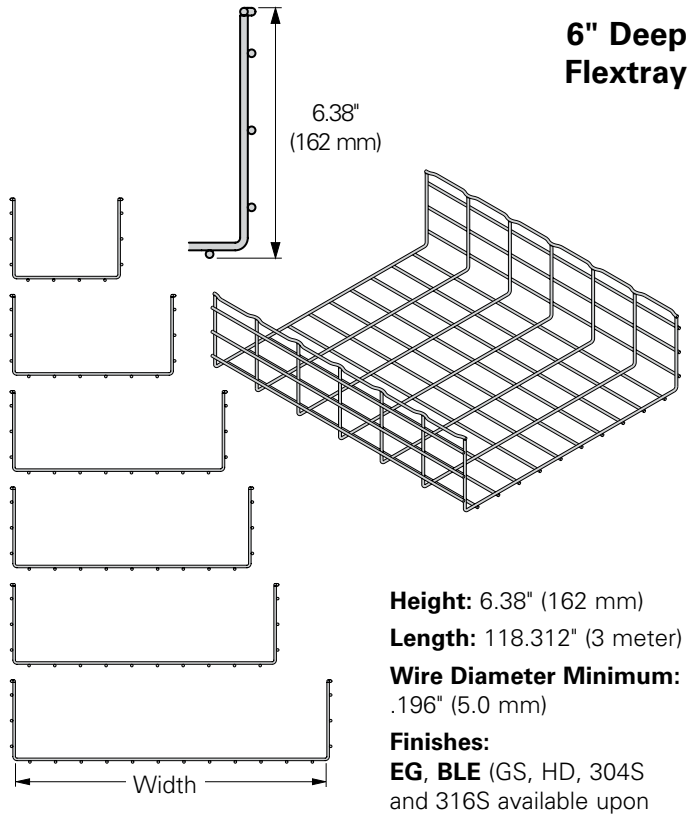

Height: 6.38" (162 mm)

Length: 118.312" (3 meter)

Wire Diameter Minimum: .196" (5.0 mm)

Finishes:
EG, **BLE** (GS, HD, 304S and 316S available upon request).

See page D-3 for finish information

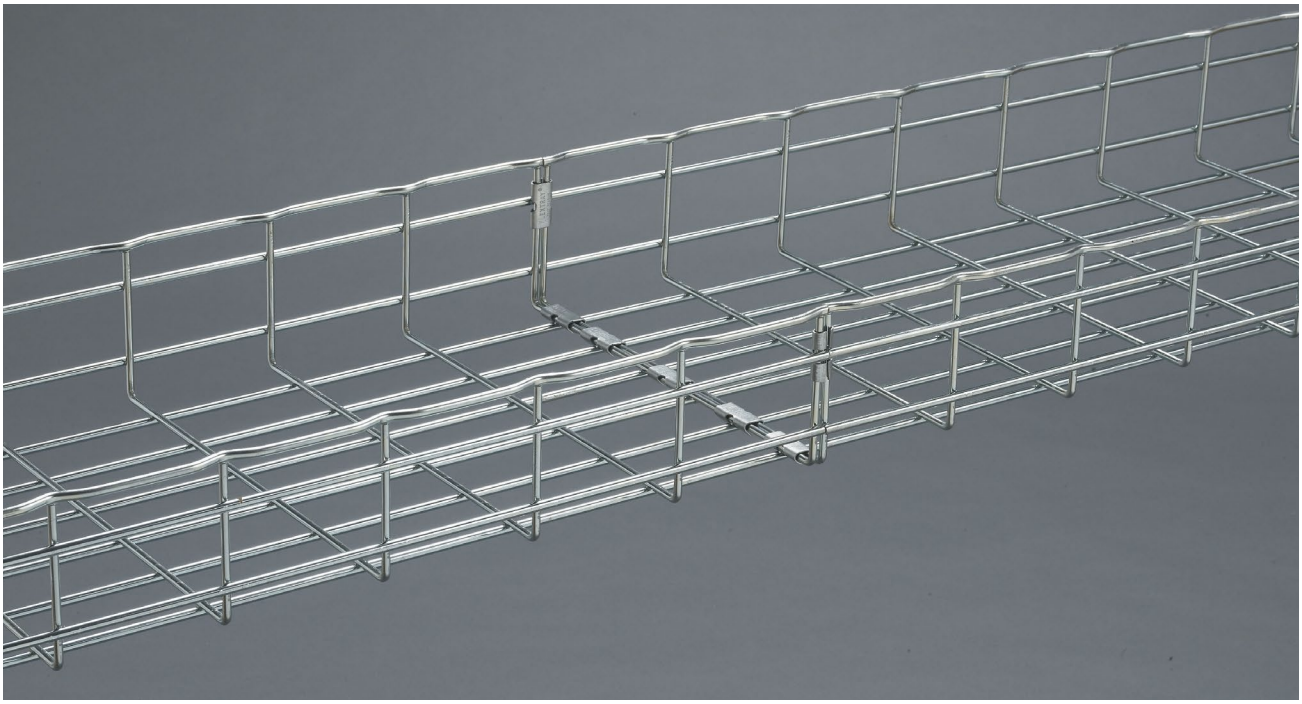

Washer Splice Kit

- Washer is staked to bolt, holding part stationary during installation.
- Fewer parts to handle.
- For use with all tray widths and sizes.
- Finishes __: **EG**, **BLE.**

Part Number	Description	Qty./Box	Wt./Box lbs. (kg)
WASHER SPL KIT__	Assembly of Staked Washer Stud/Washer & Finned Nut	100	4.5 (2.04)

- **BLE** suffix indicates black zinc finish for this part only

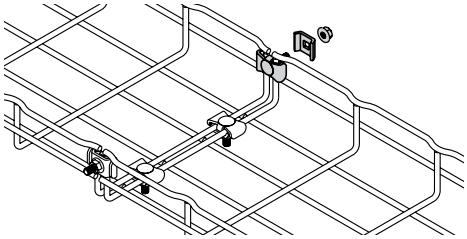

Splicing Chart (number of splices required for UL Classification)

Tray Height	Tray Width - number of splices									
	2" (50mm)	4" (100mm)	6" (150mm)	8" (200mm)	12" (300mm)	16" (400mm)	18" (450mm)	20" (500mm)	24" (600mm)	>24" (>600mm)
2"	NC	NC	3	3	3	4	4	4	4	5
4"	NM	3	3	3	3	4	4	4	4	5
6"	NM	NM	3	3	3	4	4	4	4	5

NC = Not UL Classified in this size NM = Flextray is not manufactured in this size

Splice Hardware Components

- Works with all splicing needs.
- For use with all tray widths and sizes.
- Components are sold separately.
- Finishes __: **EG**, **BLE** (304S and 316S available upon request). **FTHDWE 1/4** not available in **BLE**.

Part Number	Description	Qty./Box	Wt./Box lbs. (kg)
FTHDWE 1/4__	1/4" x 1" Carriage Bolt & Finned nut	50	2.4 (1.08)
TOP WASHER__	1" Square Splice Washer	100	2.8 (1.26)
BTM WASHER __	13/16" Square Splice Washer	100	4.0 (1.82)

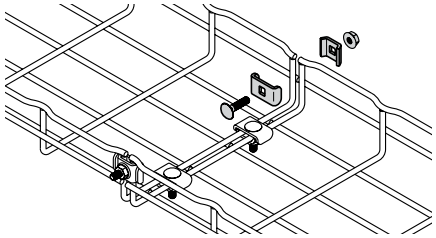

BTM WASHER

FTHDWE1/4

TOP WASHER

Splicing Chart (number of splices required for UL Classification)

Tray Height	Tray Width - number of splices									
	2" (50mm)	4" (100mm)	6" (150mm)	8" (200mm)	12" (300mm)	16" (400mm)	18" (450mm)	20" (500mm)	24" (600mm)	>24" (>600mm)
2"	NC	NC	3	3	3	4	4	4	4	5
4"	NM	3	3	3	3	4	4	4	4	5
6"	NM	NM	3	3	3	4	4	4	4	5

NC = Not UL Classified in this size NM = Flextray is not manufactured in this size

See page D-3 for finish and grounding information

Connecting Hardware

Part Number	Description	Qty./Box	Wt./Box lbs. (kg)
FTSCH__	Connecting Hardware	50	2.0 (0.91)

- Adaptable and designed for use with splice plate (FTS3SP), SPLICE BAR, and long splice bar (FTS36SB).
- Finishes __: **EG** (BLE, BLO, 304S and 316S available upon request).

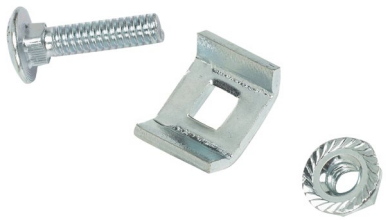

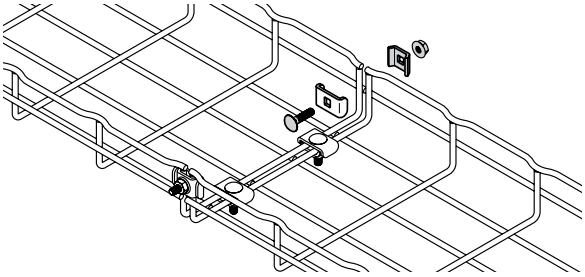

Splicing Chart

Tray Height	Tray Width - number of splices									
	2" (50mm)	4" (100mm)	6" (150mm)	8" (200mm)	12" (300mm)	16" (400mm)	18" (450mm)	20" (500mm)	24" (600mm)	>24" (>600mm)
2"	NC	NC	3	3	3	4	4	4	4	5
4"	NM	3	3	3	3	4	4	4	4	5
6"	NM	NM	3	3	3	4	4	4	4	5

NC = Not UL Classified in this size NM = Flextray is not manufactured in this size

Wing Splice

Part Number	Description	Qty./Box	Wt./Box lbs. (kg)
FTSWN__	Wing Splice™	50	3.0 (1.38)

- Two piece design for easy handling.
- Tool-less installation.
- Reduces installation time, especially when used on fittings and bends.
- Finish__: **ZN**.

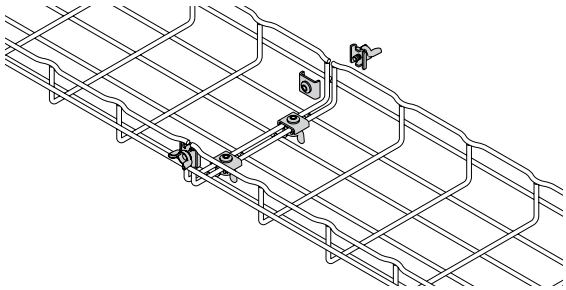

Splicing Chart (number of splices required for UL Classification)

Tray Height	Tray Width - number of splices									
	2" (50mm)	4" (100mm)	6" (150mm)	8" (200mm)	12" (300mm)	16" (400mm)	18" (450mm)	20" (500mm)	24" (600mm)	>24" (>600mm)
2"	NC	NC	3	3	3	4	4	4	4	5
4"	NM	3	3	3	3	4	4	4	4	5
6"	NM	NM	3	3	3	4	4	4	4	5

NC = Not UL Classified in this size NM = Flextray is not manufactured in this size

See page D-3 for finish and grounding information

Splice Plate (only)

Part Number	Description	Length in. (mm)	Height in. (mm)	Hole Diameter in. (mm)	Qty./ Box	Wt./Box lbs. (kg)
FTS3SP__	Splice Plate	2.7″ (68.5)	1.6″ (40.6)	0.27″ (6.8)	50	6.1 (2.76)
FTS3SPKIT	Splice Plate Kit includes FTSCH	—	—	—	—	—

- Splice plate is designed for use with connecting hardware (FTSCH) to provide added stability of splice connections.
- Hardware sold separately.
- Finish__: **ZN** (SS6 available upon request).
- Note: FT2x2x10 and FT2x4x10 are not UL Classified.

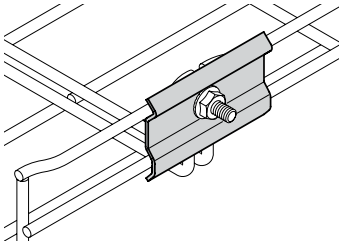

FLEXMATE Splice System

- One of the fastest splice connection methods available in the industry.
- For use with 2" (100mm) to 12" (300mm) wide tray.
- FLEXMATE™ clips and tool sold separately.
- Finishes __: **GS** (BLE available upon request).

Note: Tray widths larger than 12" (300mm) are not UL Classified. We recommend that splice/supports comply with NEMA VE-2 installation requirements

Part Number	Description	Qty./Box	Wt./Box lbs. (kg)
FLEXMATE2__	Flexmate Splice Clips	100	1.0 (0.45)
FLEXMATE TOOL	Flexmate Splice Tool	1	0.7 (0.32)

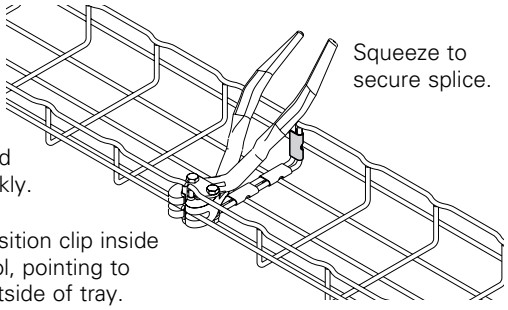

FLEXMATE2

FLEXMATE TOOL

Splicing Chart (number of splices required for UL Classification)

Tray Height	Tray Width - number of splices 2" (50mm)	4" (100mm)	6" (150mm)	8" (200mm)	12" (300mm)
2"	2 (NC)	2 (NC)	4	4	4
4"	NM	4	5	6	6
6"	NM	NM	NM	6	6

NM = Flextray is not manufactured in this size
NC = Not UL Classified in this size

See page D-3 for finish and grounding information

Tab-Loc Connector

Part Number	Description	Length in. (mm)	Qty./Box	Wt./Box lbs. (kg)
FTSTLC__	Tab-Loc Connectors	9.29″ (235.9)	50	7.2 (3.26)

- Fast splice for straight runs of tray.
- For use with 2" (50mm) to 32" (800mm) wide tray to connect straight sections only.
- Finishes __: **ZN** (SS6 available upon request).

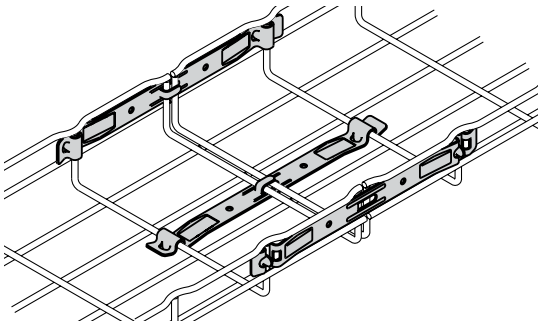

Application Requirements

The recommendations listed are equal for all depths (except as noted).

Splicing Chart

Tray Height	Tray Width - number of splices								
	2" (50mm)	4" (100mm)	6" (150mm)	8" (200mm)	12" (300mm)	16" (400mm)	18" (450mm)	20" (500mm)	24" (600mm)
2"	2	2	4	4	4	4	4	5	5
4"	NM	4	5	6	6	7	7	7	8
6"	NM	NM	NM	6	6	7	7	7	8

NM = Flextray is not manufactured in this size

Tab-Loc security without special tools.
Screwdriver can also be used to bend tab-locs (hold connector ends while bending).

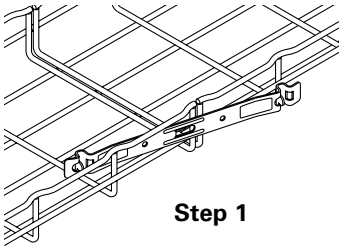

Step 1

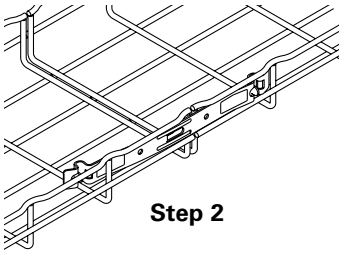

Step 2

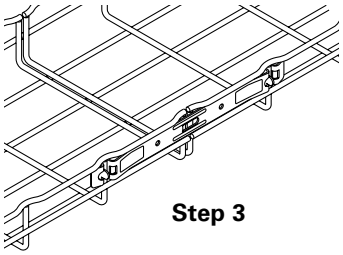

Step 3

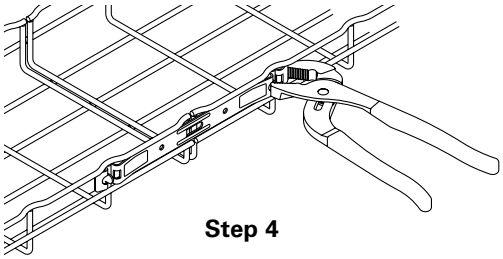

Step 4

See page D-3 for finish and grounding information

Splice Bar

- Adds rigidity to washer splice methods.
- Used on side rails only (not for use in tray bottom).
- For use on trays when using splice hardware FTSCH.
- Hardware sold separately.
- Each splice bar requires three (3) each of Hardware Splice Components - TOP WASHER, and FTHDWE 1/4 to complete connection. These items must be ordered separately.
- Washer Splice Kits (WASHER SPL KIT) are required for connections on bottom of tray.
- Finishes __: **EG**, (BLE, HD, 304S and 316S available upon request).

Part Number	Bar Length in.	(mm)	Qty./Box	Wt./Box lbs.	(kg)
SPLICE BAR__	10 13/16"	(274.6)	50	14.0	(6.35)

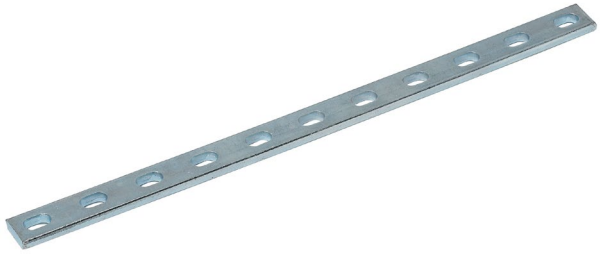

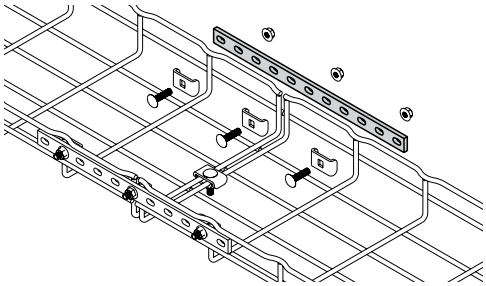

Splicing Chart (number of splices required for UL Classification)

Tray Height	Tray Width - number of splices 2" (50mm)	4" (100mm)	6" (150mm)	8" (200mm)	12" (300mm)	16" (400mm)	18" (450mm)	20" (500mm)	24" (600mm)
2"	NC	NC	2	2	2	2	2	2	2
4"	NM	2	2	2	2	2	2	2	2
6"	NM	NM	2	2	2	2	2	2	2

NC = Not UL Classified in this size NM = Flextray is not manufactured in this size

Splice Bar Kit

- Adds rigidity.
- Includes two (2) SPLICE BAR and hardware.
- Finishes __: **ZN** (FB and SS6 available upon request).

Part Number	Bar Length in.	(mm)	Qty./Box	Wt./Box lbs.	(kg)
FTSBK__	12"	(304.8)	5 Sets	6.4	(2.90)

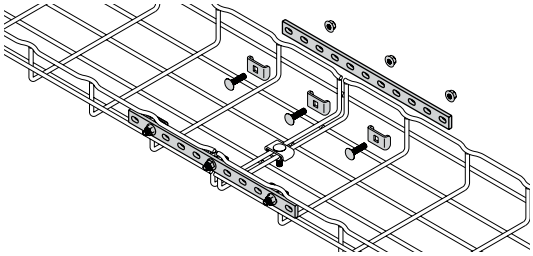

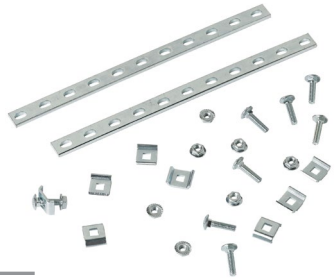

Splicing Chart (number of splices required for UL Classification)

Tray Height	Tray Width - number of splices 2" (50mm)	4" (100mm)	6" (150mm)	8" (200mm)	12" (300mm)	16" (400mm)	18" (450mm)	20" (500mm)	24" (600mm)
2"	NC	NC	2	2	2	2	2	2	2
4"	NM	2	2	2	2	2	2	2	2
6"	NM	NM	2	2	2	2	2	2	2

NC = Not UL Classified in this size NM = Flextray is not manufactured in this size

See page D-3 for finish and grounding information

Expansion Splice Kit

Part Number	Bar Length in. (mm)	Qty./Box	Wt./Box lbs. (kg)
FTS12ESK__	12" (304.8)	1 Kit	0.45 (0.20)

- Allows 1 3/4" (44mm) of expansion between two pieces of Flextray at expansion joints.
- To install, tighten nylon loc-nut until nut comes into contact with splice bar, then loosen approximately 1/4 turn.
- Includes two (2) splice bars and eight (8) sets of hardware.
- Finishes __: **ZN.**

Requires supports within 24" on both sides, per NEMA VE 2.

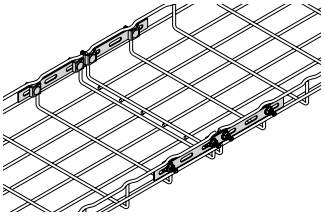

Long Splice Bar (only)

Part Number	Bar Length in. (mm)	Qty./Box	Wt./Box lbs. (kg)
FTS12SB__	12" (304.8)	1	0.13 (0.06)
FTS36SB__	36" (914.4)	1	0.40 (0.18)

- FTS36SB long splice bar is used for assembly of large radius horizontal bends or field cut into short splice bars.
- Splice Bars are designed for use with connecting hardware (FTSCH).
- Hardware sold separately.
- Finishes __: **ZN** (FB and SS6 available upon request).

FTS12SB - 6 slots

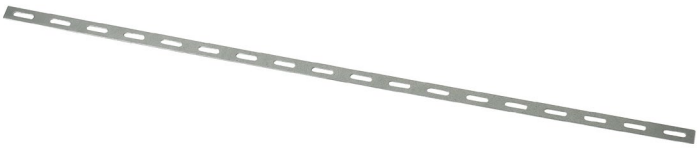

FTS36SB - 18 slots

Hold Down Plate

Part Number	Description	Box/ Qty.	Wt./Box lbs. kg
SUPT WASHER__	.28" x .70" (7.1mm x 17.8mm)	100	9.4 (4.26)
FTA6HD__	.40" x .70" (10.1mm x 17.8mm)	100	7.0 (3.17)

- Easy way to mount 4" (100mm) wide tray for raceway run.
- Use 1/4" screws to attach SUPT WASHER to your specific wall/stud application (hardware sold separately).
- FTA6HD can be used in pairs to create a center-hung support using 3/8" rod.
- To protect cables use threaded rod protector (page D-21).
- To complete 3/8" center hanger assembly use:
  2 - FTA6HD
  2 - HN 3/8"-16 hex nuts
- Finish: **ZN** (SS6 available upon request).

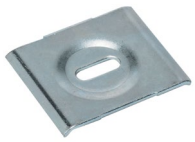

SUPT WASHER

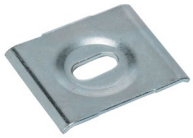

FTA6HD

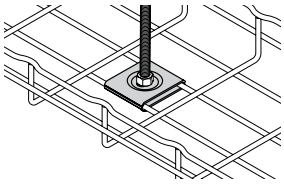

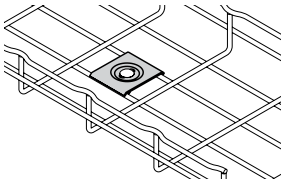

See page D-3 for finish and grounding information

Horizontal Adjustable Kit

- Horizontal adjustable kit can be used to create horizontal angles from prepared Flextray straight sections.
- Conveniently poly-bagged.
- Finishes __: **EG** (BLE and 316S available upon request).

Part Number	Description	Qty./Box	Wt./Box lbs. (kg)
FTSHAK__	Horizontal Adjustable Kit	10	2.4 (1.09)

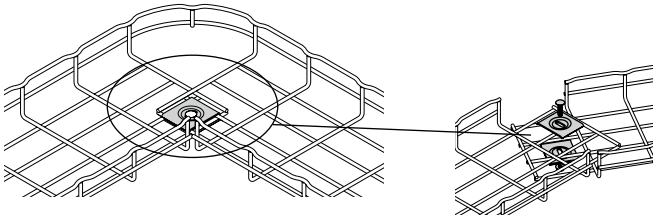

90 Degree Kit

- For fast assembly of 90° turns and tee fittings.
- For use with all tray widths and sizes.
- One kit will make two 90° turns or one tee fitting.
- 90 DEGREE KIT includes: two (2) 90° splice bars and eight (8) FTSCH.
- Finishes __: **EG** (BLE and 316S available upon request).

Part Number	Description	Qty./Box	Wt./Box lbs. (kg)
90 DEGREE KIT__	90 degree splice bar & hardware	1	1.3 (0.59)

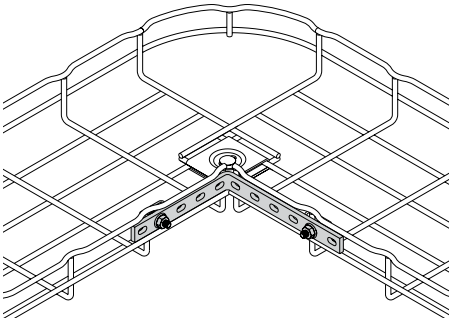

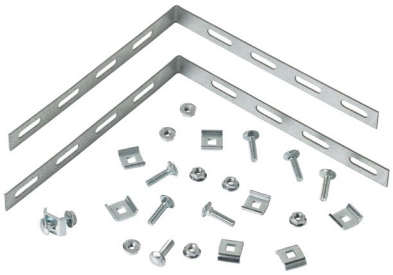

Corner Radius Kit

- Helps eliminate need for field fabrication and is quick to install.
- Built in tab features for positioning onto side rails at transition locations.
- For fast assembly of a 90° bend, tee, and cross fittings.
- One kit will make one 90° bend, two kits will make one tee, and four kits will make one cross fitting.
- Kit includes: one (1) corner radius and two (2) WASHER SPL KIT.
- Finishes __: **EG** (BLE and 316S available upon request).

Part Number	Height in. (mm)	Radius in. (mm)	Qty. per Box	Wt./Box lbs. (kg)
FTACRS-2	2" (50.8)	6" (152.4)	1	1.3 (0.59)
FTACRS-4	4" (101.6)	6" (152.4)	1	1.3 (0.59)
FTACRS-6	6" (152.4)	6" (152.4)	1	1.3 (0.59)
FTACRS-12-2	2" (50.8)	12" (304.8)	1	1.3 (0.59)
FTACRS-12-4	4" (101.6)	12" (304.8)	1	1.3 (0.59)
FTACRS-12-6	6" (152.4)	12" (304.8)	1	1.3 (0.59)

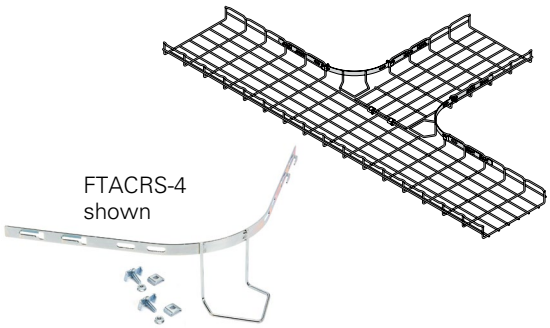

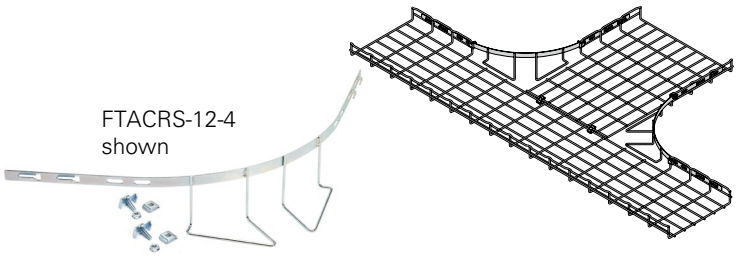

See page D-3 for finish and grounding information

Components Required to Connect Two Sections of Flextray

System Part Number	System Width in.	System Width (mm)	Connector Assembly WASHER SPL KIT	Connecting Hardware FTSCH	Splice Plate FTS3SP	Splice Bar SPLICE BAR
FT2X2 †	2"	(50)	2	—	—	—
FT2X4 †	4"	(100)	2	—	—	—
FT2X6	6"	(150)	3[1]	—	—	—
FT2X8	8"	(200)	3[1]	—	—	—
FT2X12	12"	(300)	3[1]	—	—	—
FT2X16	16"	(400)	4[1]	—	—	—
FT2X18	18"	(450)	4[1]	—	—	—
FT2X20	20"	(500)	4[1]	—	—	—
FT2X24	24"	(600)	4[1]	—	—	—
FT2X30	30"	(750)	5[1]	—	—	—
FT2X32	32"	(800)	5[1]	—	—	—
FT4X4	4"	100	3[1]	—	—	—
FT4X6	6"	150	3[1]	—	—	—
FT4X8	8"	200	3[1]	—	—	—
FT(*)X12	12"	300	3[1]	—	—	—
FT(*)X16	16"	400	4[1]	—	—	—
FT(*)X18	18"	(450)	4[1]	—	—	—
FT(*)X20	20"	500	4[1]	—	—	—
FT(*)X24	24"	600	4[1]	—	—	—
FT(*)X30	30"	(750)	5[1]	—	—	—
FT2X2 †	2"	(50)	—	2	2	—
FT2X4 †	4"	(100)	—	2	2	—
FT2X6	6"	(150)	1	2	2	—
FT2X8	8"	(200)	1	2	2	—
FT2X12	12"	(300)	1	2	2	—
FT2X16	16"	(400)	2	2	2	—
FT2X18	18"	(450)	2	2	2	—
FT2X20	20"	(500)	2	2	2	—
FT2X24	24"	(600)	2	2	2	—
FT2X30	30"	(750)	3	2	2	—
FT2X32	32"	(800)	3	2	2	—
FT4X4	4"	(100)	1	2	2	—
FT4X6	6"	(150)	1	2	2	—
FT4X8	8"	(200)	1	2	2	—
FT(*)X12	12"	(300)	1	2	2	—
FT(*)X16	16"	(400)	2	2	2	—
FT(*)X18	18"	(450)	2	2	2	—
FT(*)X20	20"	(500)	2	2	2	—
FT(*)X24	24"	(600)	2	2	2	—
FT(*)X30	30"	(750)	3	2	2	—
FT2X2 †	2"	(50)	—	6	—	2
FT2X4 †	4"	(100)	—	6	—	2
FT2X6	6"	(150)	1	6	—	2
FT2X8	8"	(200)	1	6	—	2
FT2X12	12"	(300)	1	6	—	2
FT2X16	16"	(400)	2	6	—	2
FT2X18	18"	(450)	2	6	—	2
FT2X20	20"	(500)	2	6	—	2
FT2X24	24"	(600)	2	6	—	2
FT2X30	30"	(750)	3	6	—	2
FT2X32	32"	800	3	6	—	2
FT4X4	4"	(100)	1	6	—	2
FT4X6	6"	(150)	1	6	—	2
FT4X8	8"	(200)	1	6	—	2
FT(*)X12	12"	(300)	1	6	—	2
FT(*)X16	16"	(400)	2	6	—	2
FT(*)X18	18"	(450)	2	6	—	2
FT(*)X20	20"	(500)	2	6	—	2
FT(*)X24	24"	(600)	2	6	—	2
FT(*)X30	30"	(750)	3	6	—	2

(*) 4 for 4" Deep Flextray
6 for 6" Deep Flextray

Washer Splice Kits

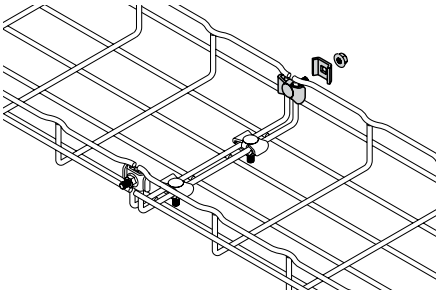

[1] Install one kit on each side and remaining kit(s) on bottom.

Splice Plates

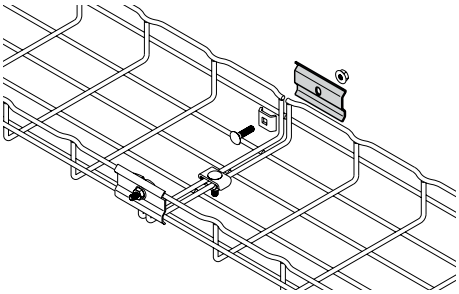

Install splice plates on sides and WASHER SPL KIT on bottom.

Splice Bars

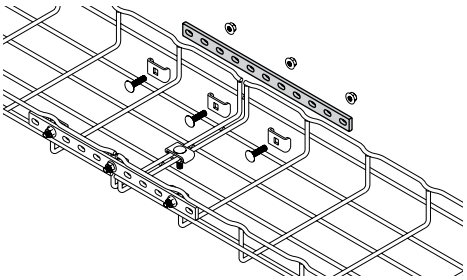

Install splice bars on sides and WASHER SPL KIT on bottom.

† Sizes not UL Classified

Flextray

Splice Plate Kits for 2" Deep Flextray

Part Number	System Width in.	System Width (mm)	Weight Per 100 lbs.	Weight Per 100 (kg)	Box Quantity	Conveniently poly-bagged for use with 2" Deep Flextray
FTS20SK	2" 4"	(50) (100)	2.91	(1.32)	10	
FTS21SK	6" 8" 12"	(150) (200) (300)	3.63	(1.64)	10	
FTS22SK	16" 18" 20" 24"	(300) (450) (500) (600)	4.35	(1.97)	10	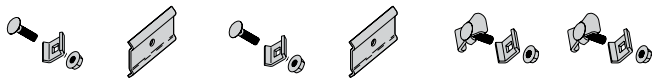
FTS23SK	30" 32"	(750) (800)	5.07	(2.30)	10	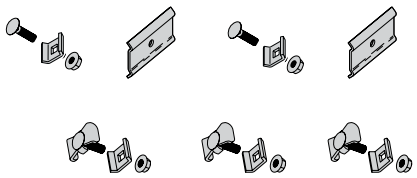

Splice Plate Kits for 4" & 6" Deep Flextray

Part Number	System Width in.	System Width (mm)	Weight Per 100 lbs.	Weight Per 100 (kg)	Box Quantity	Conveniently poly-bagged for use with 4" & 6" Deep Flextray
FTS21SK	4" 6" 8" 12"	(100) (150) (200) (300)	3.63	(1.64)	10	
FTS22SK	16" 18" 20" 24"	(400) (450) (500) (600)	4.35	(1.97)	10	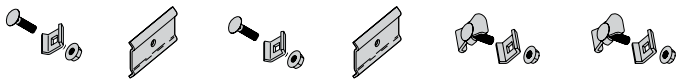
FTS23SK	30"	(750)	5.07	(2.30)	10	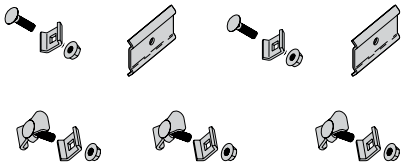

Flextray

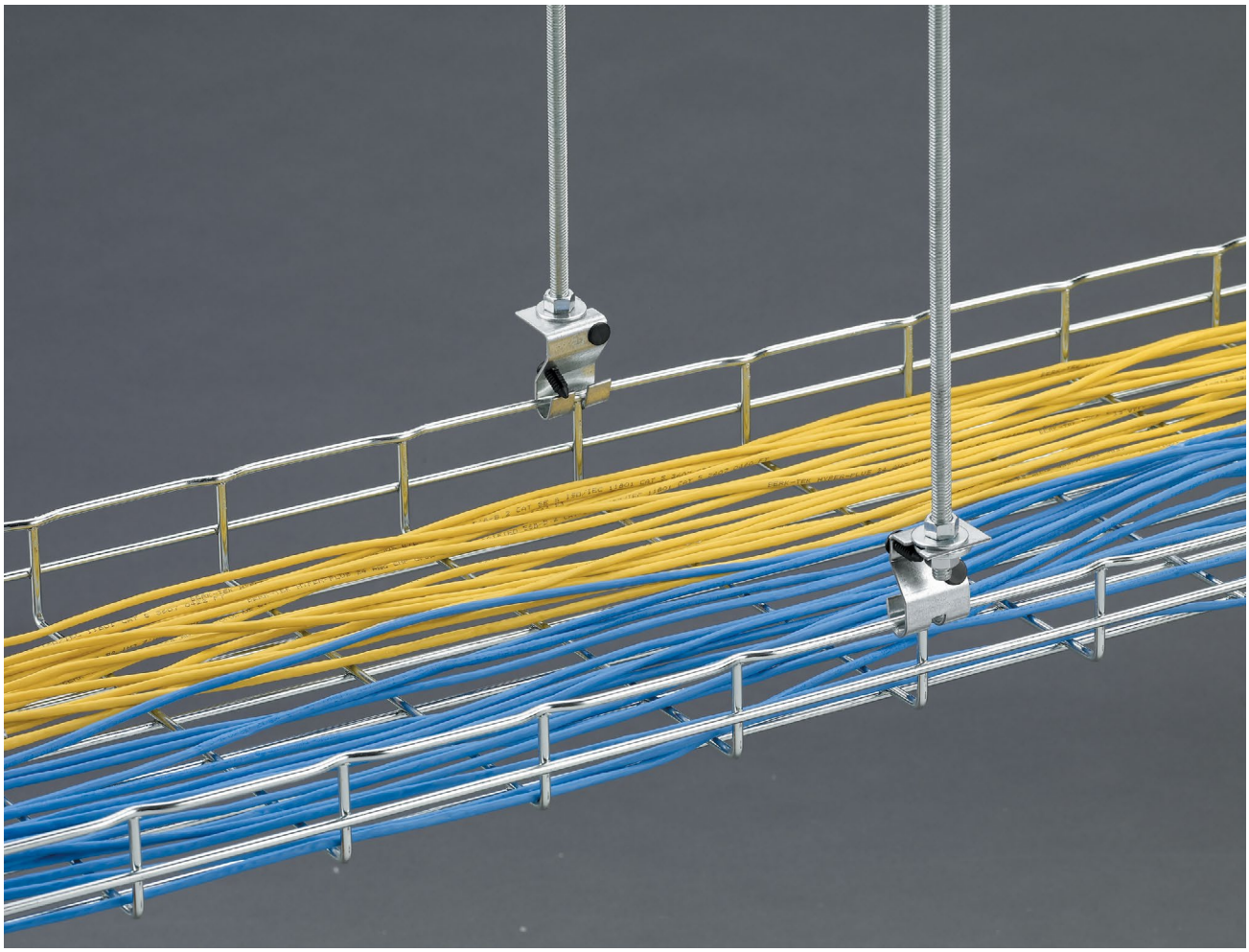

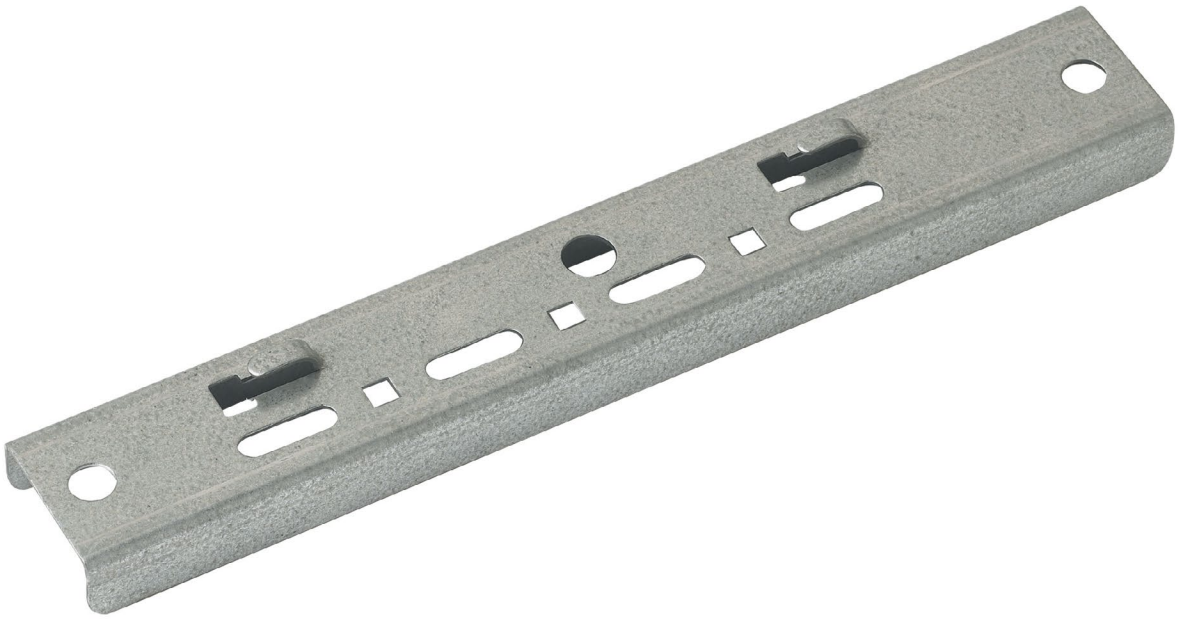

Flip Clip™

- Accommodates 1/4" and 3/8" rod sizes.
- Installs quickly with a screwdriver or pliers thus reducing installation time.
- Requires only one hex nut (not included) to hang and level the Flextray.
- Retainer tabs can be bent over to lock-in the threaded rod and wire basket.
- Finishes __: **ZN** (FB and SS6 available upon request).

Part Number	Description	Qty./Box	Wt./Box lbs. (kg)
WB46H__	Flip Clip™	50	5.2 (2.36)

Snap retainer stops in place after cable is loaded.

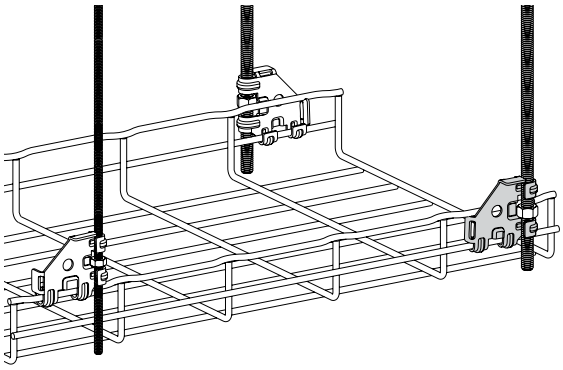

Trapeze Support

- Trapeze Clip installs fast.
- For use with trays up to 4" (100mm) deep, 12" (300mm) wide, and spans up to 8'-0" (2.44m).
- Tray can be released from support to allow side cable loading.
- Accepts 1/4" and 3/8" threaded rod sizes.
- Finishes __: **GS** (BLE available upon request).

Part Number	Description	Qty./Box	Wt./Box lbs. (kg)
TRAPEZE SUPT2__	Trapeze Support Clip	50 trapeze clips 100 retainer stops	7.0 (3.17)

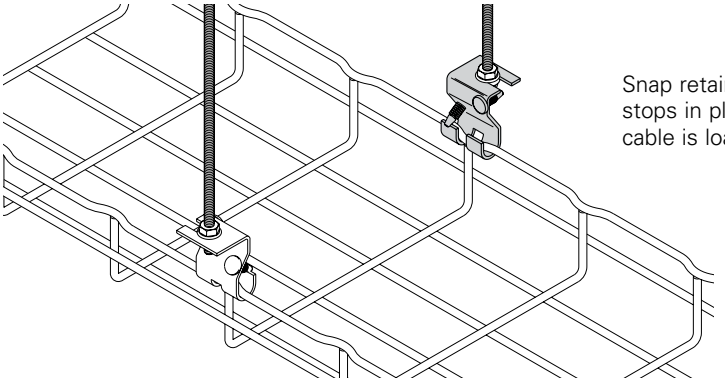

Snap retainer stops in place after cable is loaded.

See page D-3 for finish information

2" Center Hanger

Part Number	Description	Qty./Box	Wt./Box lbs. (kg)
2 IN CTR SUPT__	Center Support Hanger for FT2x2	50	5.0 (2.27)

- For use with 2" (50mm) tray widths only.
- Accepts 1/4" threaded rod.
- Hardware sold separately.
- Assemble with ATTACHMENT CLP & FTHDWE 1/4 hardware.
- Finishes __: **GS** (BLE available upon request).

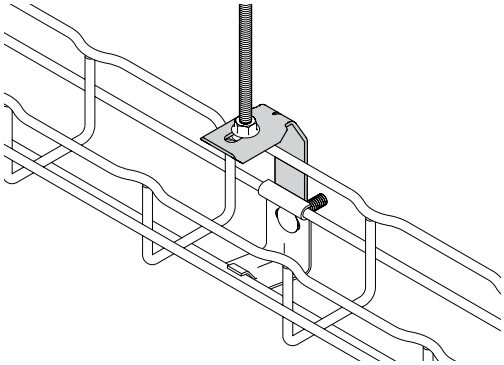

Hold Down Plate

Part Number	Description	Qty./Box	Wt./Box lbs. (kg)
SUPT WASHER__	.28" x .70" (7.1mm x 17.8mm)	100	9.4 (4.26)
FTA6HD__	.40" x .70" (10.1mm x 17.8mm)	100	7.0 (3.18)

- Easy way to mount 4" (100mm) wide tray for raceway run.
- Use 1/4" screws to attach SUPT WASHER to your specific wall/stud application (hardware sold separately).
- FTA6HD can be used in pairs to create a center-hung support using 3/8" rod.
- To protect cables use threaded rod protector (page D-20).
- To complete 3/8" center hanger assembly use:
  2 - FTA6HD
  2 - HN 3/8"-16 hex nuts
- Finish: **ZN** (SS6 available upon request).

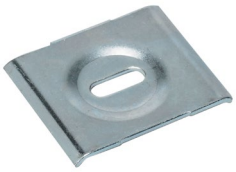

SUPT WASHER

FTA6HD

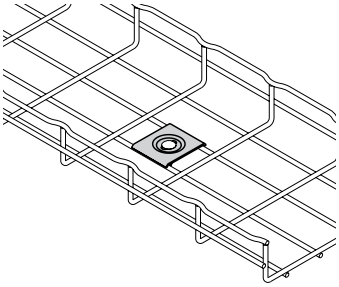

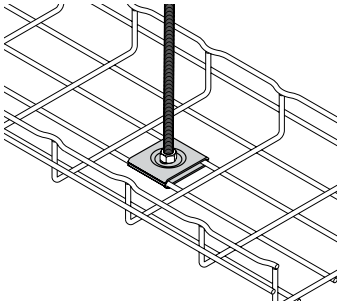

See page D-3 for finish information

Mounting Bracket

- Designed to support FT2X2X10 Flextray.
- Click tabs for Flextray attachment.
- Use 1/4" hardware and washer (not included) to mount bracket.
- Finishes __: **SS6.**

Part Number	Description	Qty./Box	Wt./Box lbs. (kg)
FTB2UB__	Light Duty Wall/Rack Bracket	10	2.1 (0.95)

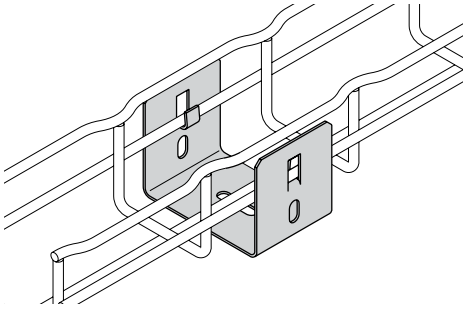

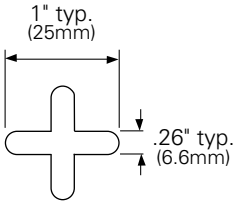

Center Hung Clip

- Use for light duty cabling applications.
- For use with 1 1/2" (38mm) & 2" (51mm) deep tray with 4" (100mm) and 6" (150mm) widths.
- When hanging 4" (100mm) wide tray, center hung clip must be run parallel with the tray.
- Built-in hold down tab.
- Accepts 1/4" threaded rod.
- Threaded rod and nuts sold separately.
- Finishes __: **GS** (BLE available upon request).

Part Number	Description	Qty./Box	Wt./Box lbs. (kg)
CTR HUNG CLP__	Light Duty Center Hanger	50	4.0 (1.81)

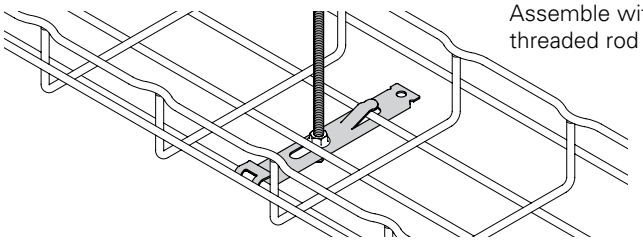

Threaded Rod Protector

- Use to protect cables from 1/4" to 1/2" threaded rod.
- PVC UL94V-O material.
- Color: Gray.
- Not plenum rated.

Part Number	Description	Qty./Box	Wt./Box lbs. (kg)
SB301-1/2x8	Rod Protector	1	0.03 (0.013)

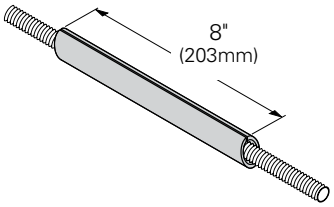

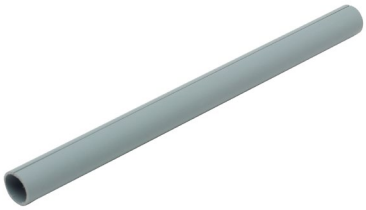

See page D-3 for finish information

Center Trapeze Hanger

- Can be installed as center-hung or traditional trapeze hanger.
- Multiple options to secure Flextray to hanger.
  - Built in hold down tabs (use screwdriver to bend down tab).
  - Compatible with TOOLLESS CLIP with snap-inlocking pin.
  - Compatible with WBUHD hold down clip whentray crosswire is aligned over top of hanger.
  - Slots and holes for optional hardware attachment.
- Corrosion resistant pre-galvanized zinc finish (other finishes available upon request).
- Center hole for up to 1/2" rod.
- Hole on each end for up to 3/8" rod.
- Threaded rod protector available (SB301-1/2 x 8) see page D-20.
- When 1/2" trapeze rods are required, add -1/2 to end of part number when ordering.

Part Number	Maximum Tray Width in.	(mm)	Actual Length in.	(mm)	Wt./Pc. lbs.	(kg)
FTB06CT	6"	(150)	9.78"	(248)	0.61	(0.27)
FTB08CT	8"	(200)	11.75"	(298)	0.74	(0.33)
FTB12CT	12"	(300)	15.69"	(398)	0.98	(0.44)
FTB16CT	16"	(400)	19.63"	(498)	1.61	(0.73)
FTB18CT	18"	(450)	21.59"	(548)	1.77	(0.80)
FTB20CT	20"	(500)	23.56"	(598)	1.93	(0.87)
FTB24CT	24"	(600)	27.50"	(698)	2.25	(1.02)

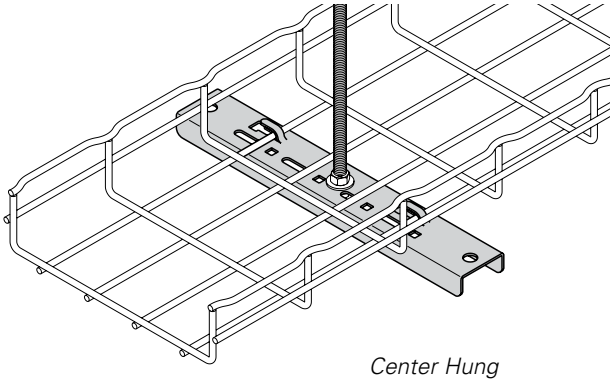

Center Hung

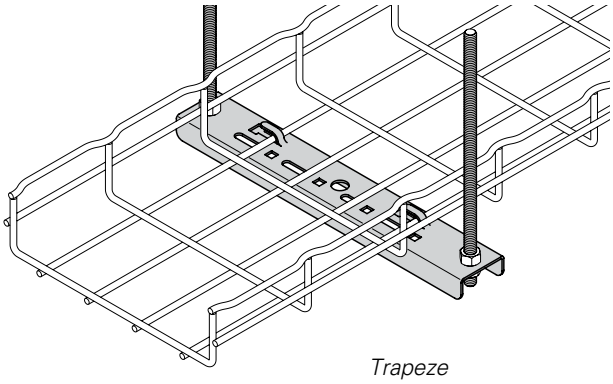

Trapeze

See page D-3 for finish information

KwikWire Clamps & Wire Rope

- KwikWire™ system replaces jack chain or ATR to support lighting, ductwork, and Flextray.
- Can be quickly installed around beams - No drilling required.
- Ideal for sloped ceilings - can hang objects at up to 60° angles.
- Simple height adjustments are made by releasing locking tab, no tools required.
- Spools of wire can be cut to length in field, reducing waste and up front planning.

Part No.	Clamps - For Use With Wire Rope Diameters	Box Qty.
BKC100	1/16" (1.6mm) & 3/32" (2.3mm)	100
BKC200-1	3/32" (2.4 mm), 1/8" (3.2mm), & 3/16" (4.7mm)	50

Part No.	Rope Dia. in.	Rope Dia. (mm)	Working Load Lbs.	Working Load (kg)	Spool
BKW063 (1)	1/16"	(1.6)	96	(43.5)	500 ft.
BKW094 (1)	3/32"	(2.3)	184	(83.4)	500 ft.
BKW125 (1)	1/8"	(3.2)	340	(154.2)	500 ft.
BKW188 (2)	3/16"	(4.8)	840	(381.0)	250 ft.

Wire Rope Construction

(1) 7 x 7

(2) 7 x 19

KwikWire Clamp Working Loads*

Clamp Part No.	Wire Rope Dia.	Lbs. Safety Factor 4
BKC100	1/16"	0-75
BKC100	3/32"	25-150
BKC200-1	3/32"	25-150
BKC200-1	1/8"	25-250
BKC200-1	3/16"	50-500

* Working loads shown are for hanging vertically. For suspending at 15°, 30°, 45° or 60° angles from vertical, use the following percentage of the working loads from the chart:

15° = 96%
30° = 86%
45° = 70%
60° = 50%

Cutter Part No.	Box Qty.
BKCC	1

KwikPak Wire Rope & Clamps

- KwikPak™ includes a supply of kwik-clamps and a spool of wire rope.
- KwikPak are shipped in a specially designed dispenser box to ease field cutting of wire.

Part No.	For Use With Wire Rope Diameters	Box Qty.
BKP10063	BKC100 (100 pcs.) 1/16"Ø Wire Rope (500 ft.)	1
BKP10094	BKC100 (100 pcs.) 3/32"Ø Wire Rope (500 ft.)	1
BKP20125	BKC200-1 (50 pcs.) 1/8"Ø Wire Rope (500 ft.)	1
BKP20188	BKC200-1 (50 pcs.) 3/16"Ø Wire Rope (500 ft.)	1

See page D-3 for finish information

KwikWire Accessory Features

- Helps reduce on the job installation time.
- Can be installed quickly without drilling into existing structure.
- Increases versatility in the field.
- KwikWire accessory system helps reduce inventory and shipping costs.
- No more sawing, filing, or fixing nuts.
- Designed for use with cable tray, lighting, and HVAC.
- Eliminates the need for all threaded rod.
- Cost effective solution for jack chain.
- "Y" style accessories require 50% less drilling.

KwikWire Accessory Numbering System

Product Line	Assembly Configuration	Leg Termination	Leg Length	Wire Rope Diameter	Straight Length	Assembly or Kit
BK = KwikWire	Blank = Single Leg	A = Angle Bracket w/Pin	Blank = See Straight Length	063 = 1/16"	Blank = Loop w/ Plastic Tube	Blank = Assembly Only
	Y = 2 Legs	H = Hook	18 = 18" Leg	094 = 3/32"	18 = 18"	K = Kit (Assembly & BKC100 Clamp)
	3 - 3 Legs	L = Loop	30 = 30" Leg		30 = 30"	
		T = Toggle			40 = 40"	
		W = Fuse Cut			80 = 80"	
		B25 = Bolt w/ 1/4"-20 Thread			120 = 120"	
		B38 = Bolt w/ 3/8"-16 Thread			180 = 180"	
		BM6 = Bolt w/ M6 Thread			240 = 240"	
		BM8 = Bolt w/ M8 Thread			360 = 360"	
		BM10 = Bolt w/ M10 Thread				

Examples

BKYT18-094-120K

BK Y T 18 - 063 - 120 K

KwikWire Accessory
2 legs - toggle leg termination - 18" legs - 1/16" diameter wire - 120" straight length - kit with clamp

BKL-063-120K

BK L - 063 - 120 K

KwikWire Accessory
single leg - looped leg termination - 1/16" diameter wire - 120" straight length - kit with clamp

See page D-3 for finish information

KwikWire 'Y' Style Hook Termination

Part No.	Leg Length in.	Leg Length (mm)	Wire Rope Dia. in.	Wire Rope Dia. (mm)	Length in.	Length (mm)
BKYH18-094-40	18"	(457)	3/32"	(2.3)	40"	(1016)
BKYH18-094-80	18"	(457)	3/32"	(2.3)	80"	(2032)
BKYH18-094-120	18"	(457)	3/32"	(2.3)	120"	(3048)
BKYH18-094-180	18"	(457)	3/32"	(2.3)	180"	(4572)
BKYH18-094-240	18"	(457)	3/32"	(2.3)	240"	(6096)
BKYH18-094-360	18"	(457)	3/32"	(2.3)	360"	(9144)
BKYH30-094-40	30"	(762)	3/32"	(2.3)	40"	(1016)
BKYH30-094-80	30"	762)	3/32"	(2.3)	80"	(2032)
BKYH30-094-120	30"	(762)	3/32"	(2.3)	120"	(3048)
BKYH30-094-180	30"	(762)	3/32"	(2.3)	180"	(4572)
BKYH30-094-240	30"	(762)	3/32"	(2.3)	240"	(6096)
BKYH30-094-360	30"	(762)	3/32"	(2.3)	360"	(9144)

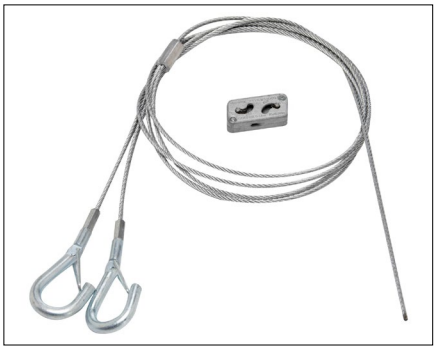

Box Quantity - 10
5 bags containing 2 pieces per bag

KwikWire 'Y' Style Hook Termination With Loop

Part No.	Wire Rope Dia. in.	Wire Rope Dia. (mm)	Length in.	Length (mm)
BKYH18-094	3/32"	(2.3)	18"	(457)
BKYH30-094	3/32"	(2.3)	30"	(762)

- Hook designed for up to 3/8" diameter wire.
- Available as a wire rope with hook termination only or as a ready-to-use kit with a BKC100 clamp.
- Available in lengths of 40", 80", 120", 180", 240", and 360".
- Available in single, double (Y), and triple (3) leg styles.

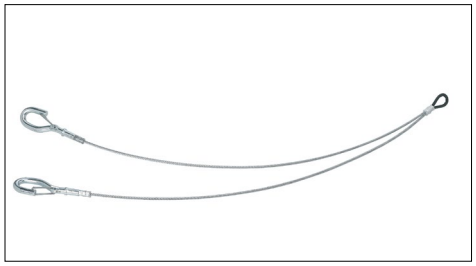

Box Quantity - 10
5 bags containing 2 pieces per bag

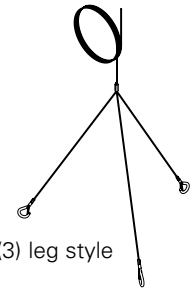

Triple (3) leg style

For more information on KwikWire accessories see the KwikWire catalog.

See page D-3 for finish information

Shelf Brackets

- Heavy-duty support bracket.
- For use with 6" (150mm) to 24" (600mm) wide trays.
- Built-in tab for hold down.
- Optional hardware (FTSCH) sold separately.
- Finishes __: **GLV** (HDG and SS6 available upon request).

Part Number	Use With Tray Width in.	(mm)	Qty./Box	Wt./Pc. lbs.	(kg)
FTB06CS__	6"	(150)	1	0.5	(0.22)
FTB08CS__	8"	(200)	1	0.6	(0.27)
FTB12CS__	12"	(300)	1	1.2	(0.54)
FTB16CS __	16"	(400)	1	1.7	(0.77)
FTB18CS __	18"	(450)	1	1.9	(0.86)
FTB20CS __	20"	(500)	1	2.6	(1.18)
FTB24CS __	24"	(600)	1	3.2	(1.45)

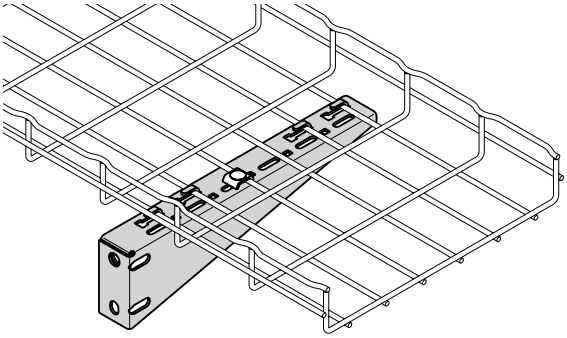

L Brackets

- Installs tray to wall cleanly.
- Built-in tab for hold down (not available in stainless steel).
- For use with 4" (100mm) to 24" (600mm) wide trays.
- Use with pedestal clamp in raised floor applications.
- Optional hardware (FTSCH) sold separately.
- Finishes __: **EG** (HD, BLE and 316S available upon request).

Part Number	Use With Tray Width in.	(mm)	Qty./Box	Wt./Pc. lbs.	(kg)
4 L BRKT__	4"	(150)	1	0.6	(0.27)
8 L BRKT__	6" 8"	(150) (200)	1	0.8	(0.36)
12 L BRKT__	12"	(300)	1	1.3	(0.59)
16 L BRKT__	16"	(400)	1	1.4	(0.63)
20 L BRKT__	18" 20"	(450) (500)	1	2.0	(0.91)
24 L BRKT__	24"	(600)	1	2.3	(1.04)

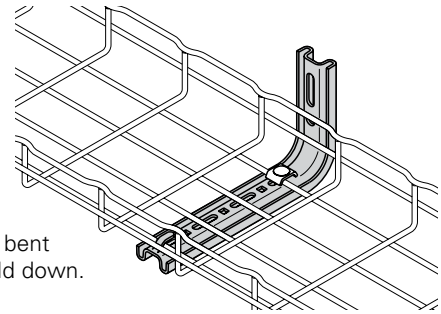

Tab can be bent over for hold down.

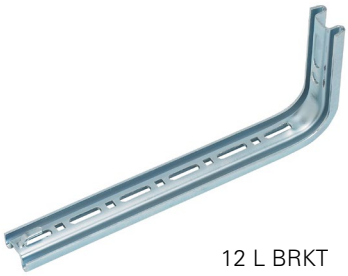

12 L BRKT

See page D-3 for finish information

Z Brackets

Part Number	Description	Qty./Box	Wt./Box lbs. (kg)
Z BRKT__	Z Bracket	25	14.0 (6.35)

- Used for horizontal and/or vertical mounting.
- 8" (200mm) wide bracket for use with 6" (100mm) to 32" (800mm) wide trays.
- Can be used to offset trays from floor.
- Can be used to terminate tray run at wall.
- Multiple brackets can be used for wider tray widths.
- Use with two (2) FTSCH (sold separately).
- Finishes __: **GS** (BLE available upon request).

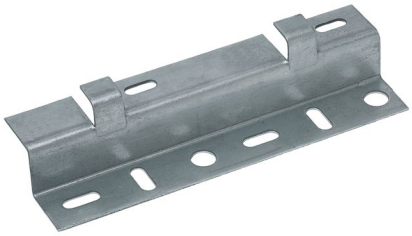

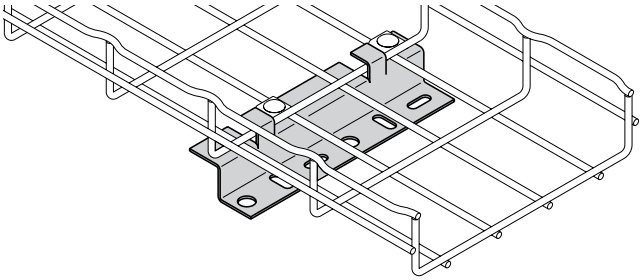

Hold Down Plate

Part Number	Description	Qty./ Box	Wt./Box lbs. (kg)
SUPT WASHER__	.28" x .70" (7.1mm x 17.8mm)	50	4.7 (2.13)
FTA6HD__	.40" x .70" (10.1mm x 17.8mm)	50	3.5 (1.59)

- Easy way to mount 4" (100mm) wide tray for raceway run.
- Use 1/4" screws to attach SUPT WASHER to your specific wall/ stud application (hardware sold separately).
- FTA6HD can be used in pairs to create a center-hung support using 3/8" rod.
- To protect cables use threaded rod protector (page D-20).
- To complete 3/8" center hanger assembly use:
  2 - FTA6HD
  2 - HN 3/8"-16 hex nuts
- Finish: **ZN** (SS6 available upon request).

SUPT WASHER

FTA6HD

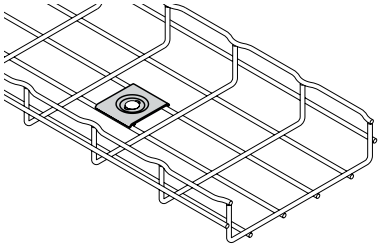

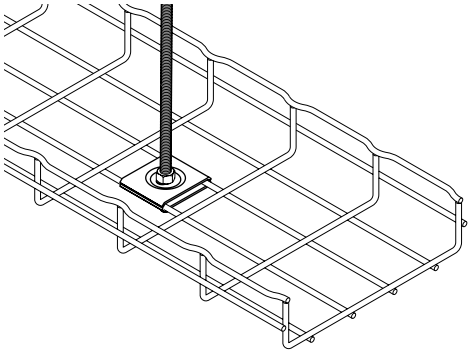

See page D-3 for finish information

Attachment Clips

- Wall attachment for 2" (50mm) wide tray only (FT2X2X10).
- Low-profile appearance.
- Built-in tab to hold down tray.
- Can also be used with 2" (50mm) Center Hanger (see page D-19).
- Hardware sold separately.
- Finishes __: **GS** (BLE available upon request).

Part Number	Description	Qty./Box	Wt./Box lbs. (kg)
ATTACHMENT CLP__	Support for FT2x2x10	50	3.4 (1.54)

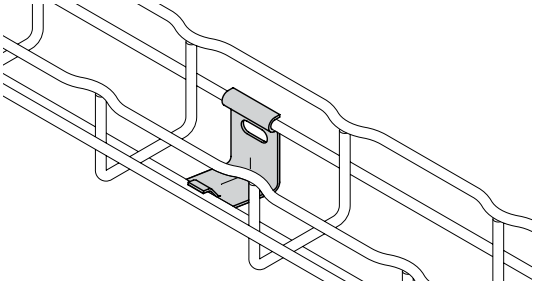

Mounting Bracket

- Designed to support FT2X2X10 Flextray.
- Click tabs for Flextray attachment.
- Use 1/4" hardware and washer (not included) to mount bracket.
- Finishes __: **SS6.**

Part Number	Description	Qty./Box	Wt./Box lbs. (kg)
FTB2UB__	Light Duty Wall/Rack Bracket	10	2.1 (0.95)

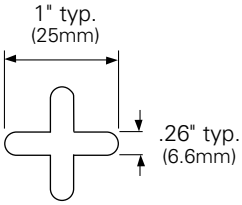

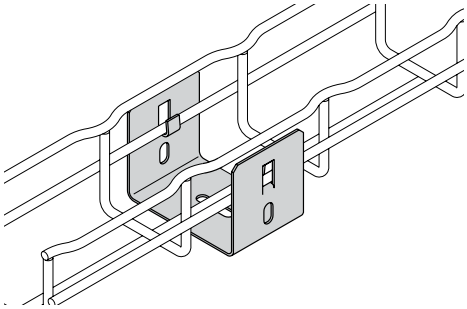

Wall Supports

- Used to attach 2" (50mm) or 4" (100mm) wide trays to walls, struts or cabinets.
- Use for raceway mounting.
- Mount to metal framing for vertical support.
- Tabs are built in for tray hold down.
- Mount to side rail for electrical box connection.
- Finishes __: **GLV.**

Part Number	Description	Qty./Box	Wt./Box lbs. (kg)
FTA050CC__	Wall Support Bracket	1	0.8 (0.36)

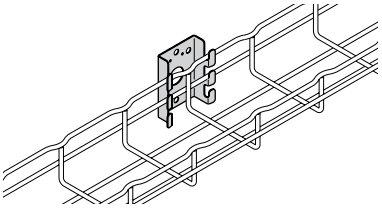

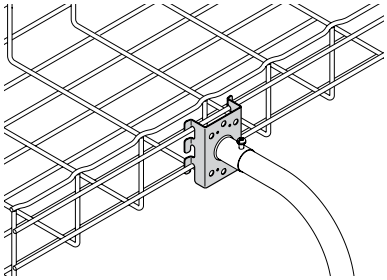

See page D-3 for finish information

Wall Termination Kit

Part Number	Length in. (mm)	Qty./Box	Wt./Box lbs. (kg)
FTA9WTK__	9" (228.6)	1	1.3 (0.59)

- Kit includes all hardware necessary to support Flextray when terminated at a wall.
- Mount slotted angle to wall with up to 3/8" hardware (not included).
- Wall Termination Kit includes:
  1 - Angle with Slots
  2 - FTSCH
- Finishes __: **ZN** (FB and SS6 available upon request).

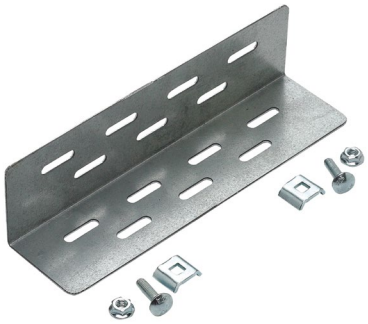

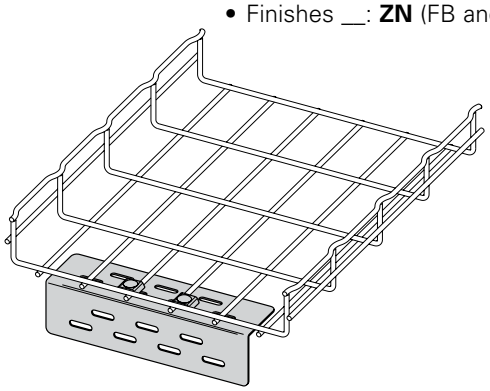

Wall Mount Kit

Part Number	Length in. (mm)	Qty./Box	Wt./Box lbs. (kg)
WB48WMK__	8" (203.2)	1	0.76 (0.35)
WB1224WMK__	12" (304.8)	1	1.22 (0.55)

- Kit includes all components necessary to mount Flextray to a wall horizontally or vertically
- Mount strut to wall with up to 1/2" hardware (not included).
- Wall Mount Kit includes:

WB48WMK	WB1224WMK	
1	1	B54SH Strut
1	2	SUPT WASHER Hold Downs
1	2	1/4"-20 x 1" Slotted Head Screw
1	2	N224WO Channel Nut

- Finish: Channel - **GLV**; Hardware - **ZN;**
  (SS6 available upon request)

WB1224WMK shown

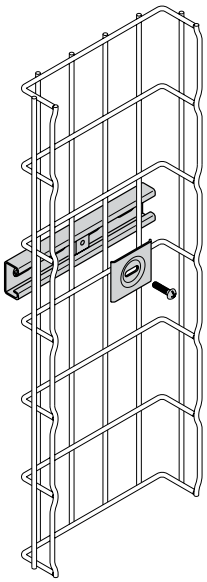

Vertically Mounted

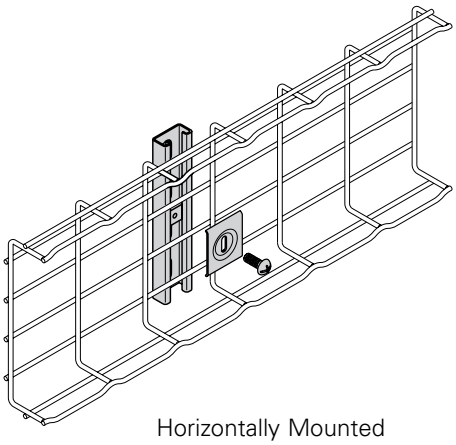

Horizontally Mounted

See page D-3 for finish information

C Brackets

- Tab can be used for hold down (stainless steel will not have these tabs)
- For use with 4" (100mm) to 12" (300mm) wide trays
- C bracket attaches to hard ceiling types
- All brackets are 7-7/8" (200mm) tall
- Cables can be side loaded
- L brackets (page D-26) and C brackets can be combined for layered tray runs
- Finishes __: **EG** (BLE and HD available upon request)

Part Number	Tray Width - Up To in.	(mm)	Qty./Box	Wt./Box lbs. (kg)
4 C BRKT__	4"	(100)	1	1.2 (0.54)
8 C BRKT__	8"	(200)	1	1.4 (0.63)
12 C BRKT__	12"	(300)	1	1.9 (0.86)

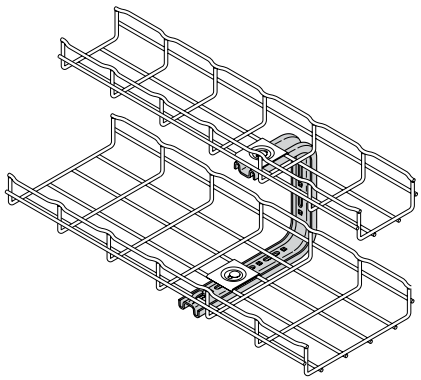

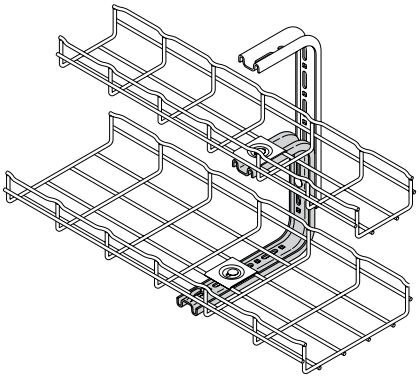

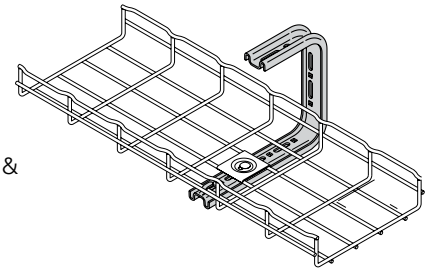

Under floor support bracket

- Under floor support bracket provides rugged support for FLEXTRAY System from access floor post.
- To complete the installation, the following hardware must be ordered separately.
  (2) - B501 U-Bolts
  (1) - SUPT WASHER Hold Down
  (1) - 1/4"-20 x 1" Slotted Head Screw
  (1) - N224WO Channel Nut
- Finish: **ZN**

Part Number	'A' in.	(mm)	Box Quantity	Wt. Per Each lbs. (kg)
B409UF-12	12"	(300)	1	3.6 (1.63)
B409UF-18	18"	(450)	1	4.5 (2.04)
B409UF-21	21"	(533)	1	5.4 (2.45)

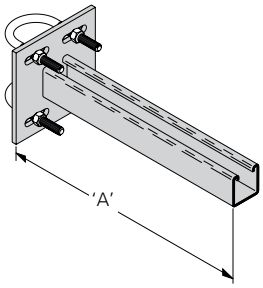

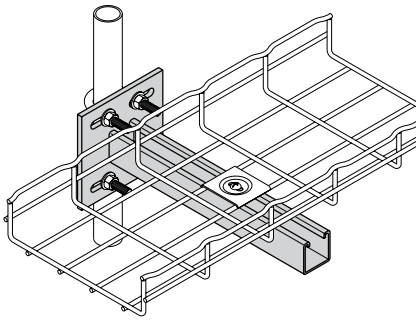

See page D-3 for finish information

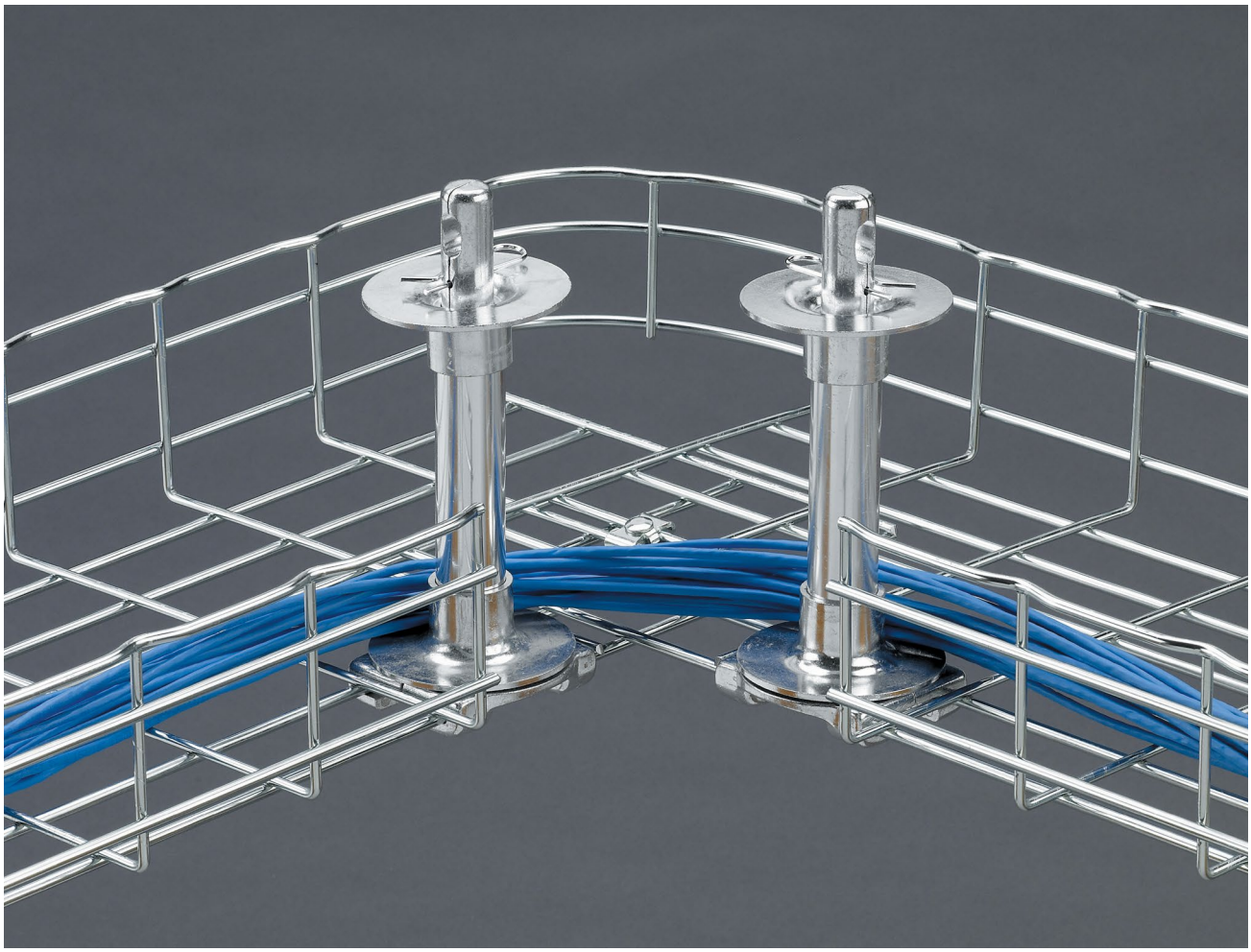

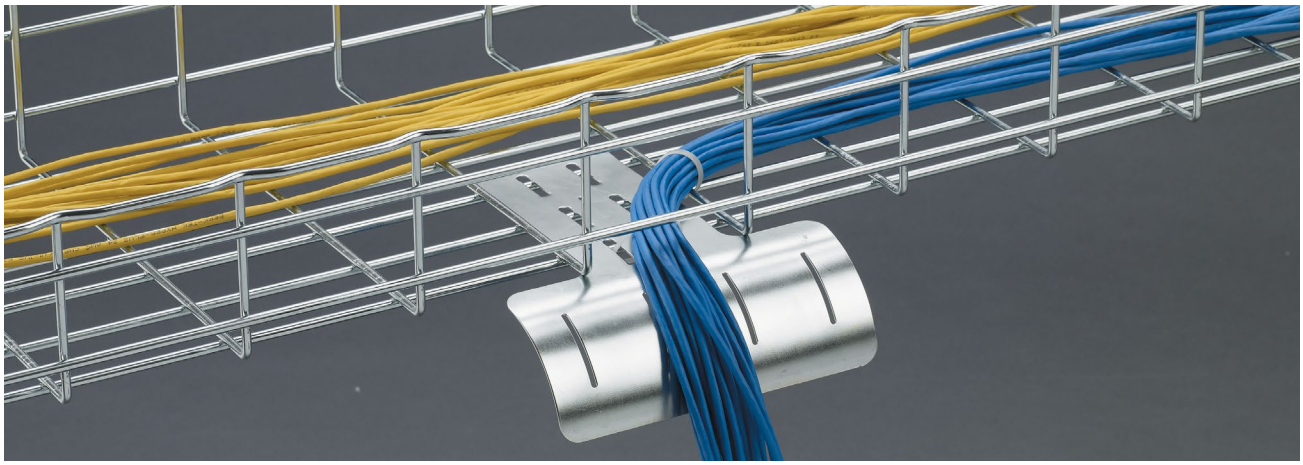

FLEXTRAY®
IT'S SIMPLE CABLE MANAGEMENT

Covers

- Protects cable from debris and dust
- Adds security to installation; please note flex tray covers are not designed to be utilized in environments with environmental loads
- Easy bend-over tabs secure cover to trays
- Available for 2" (50mm) to 24" (600mm) wide trays
- Comes in 118" (2997mm) length
- Flextray covers are intended for indoor use only
- Finishes __: **GS** (BLE, 304S and 316S available upon request)

Part Number	For Tray Width Of in.	(mm)	Qty./Box	Wt./Box lbs.	(kg)
2 IN COVER__	2"	(50)	1	3.8	(1.72)
4 IN COVER__	4"	(100)	1	5.7	(2.58)
6 IN COVER__	6"	(150)	1	6.7	(3.04)
8 IN COVER__	8"	(200)	1	8.7	(3.94)
12 IN COVER__	12"	(300)	1	11.6	(5.26)
16 IN COVER__	16"	(400)	1	15.6	(7.07)
18 IN COVER__	18"	(450)	1	17.0	(7.71)
20 IN COVER__	20"	(500)	1	18.5	(8.39)
24 IN COVER__	24"	(600)	1	22.0	(9.98)

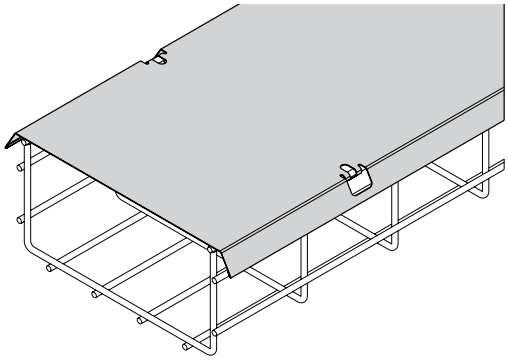

Dividers

- Allows cable separation within a single tray
- Hemmed, rounded edge provides cable jacket safety
- Hardware included (see image below)
- Field miter for bends and turns
- Dual slots every 24" (609mm) for field cutting
- Available in 2" (50mm), 4" (100mm) and 6" (150mm) heights
- Comes in 118.125" (3000mm) length
- Finishes __: **GS** (BLE, 304S and 316S available upon request)

Part Number	For Tray Depth Of in.	(mm)	Qty./Box	Wt./Box lbs.	(kg)
2 IN DIVIDER__	2"	(50)	1	3.5	(1.59)
4 IN DIVIDER __	4"	(100)	1	9.6	(4.35)
6 IN DIVIDER __	6"	(150)	1	14.5	(6.58)

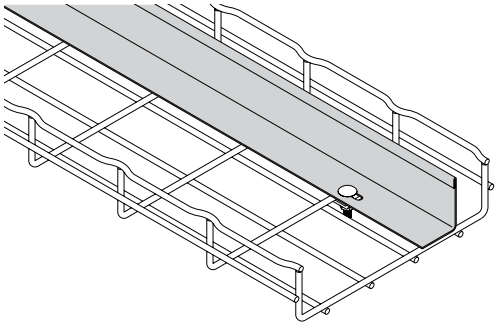

Dividers include hardware shown below

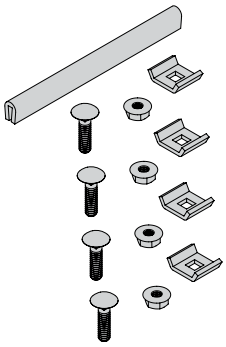

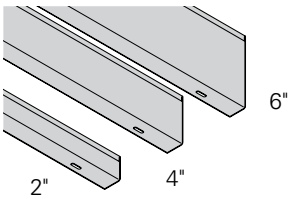

See page D-3 for finish information

Polypropylene liner for Flextray wire basket

- Uses UL 94 V-0 rated material in thickness of 0.017"
- Available in flat and scored flat for sidewalls
- Available in black (BLK) and white (WHT)
- Rolls are 100 feet in length
- Installation is as simple as position, roll and cut to size by using industrial utility knife

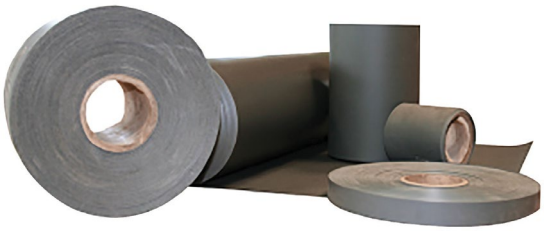

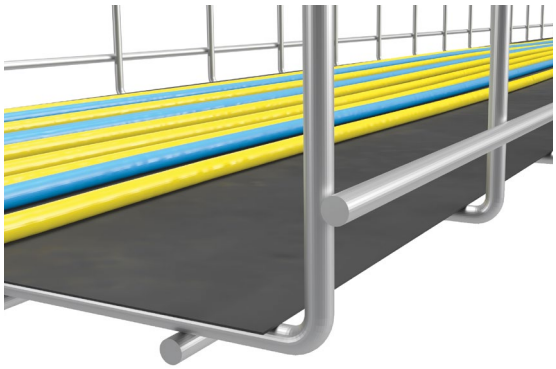

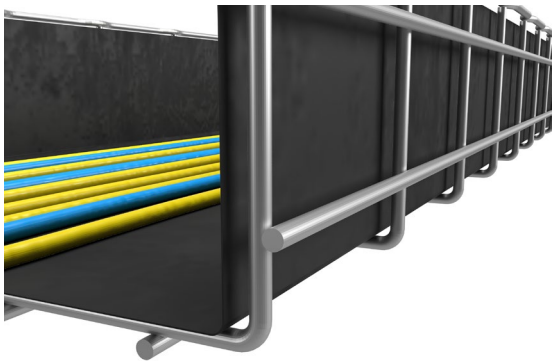

Flat liners

Straight Cut Part No.*	Flextray Width in.
FT POLY-LINER 6x100 ___	6
FT POLY-LINER 12x100 ___	12
FT POLY-LINER 18x100 ___	18
FT POLY-LINER 24x100 ___	24
FT POLY-LINER 34x100 ___	34

* Specify color ___: Black (BLK) or White (WHT)

Scored flat plus sidewall

Scored Flat Plus Sidewall Part No.*	Flextray Width in.	Sidewall Flextray Height in.
FT POLY-LINERSW 2x2x100 ___	2	2
FT POLY-LINERSW 2x32x100 ___	32	2
FT POLY-LINERSW 2x34x100 ___	34	2
FT POLY-LINERSW 4x4x100 ___	4	4
FT POLY-LINERSW 4x30x100 ___	30	4
FT POLY-LINERSW 6x6x100 ___	6	6
FT POLY-LINERSW 6x8x100 ___	12	6
FT POLY-LINERSW 6x10x100 ___	10	6
FT POLY-LINERSW 6x12x100 ___	12	6
FT POLY-LINERSW 6x14x100 ___	14	6
FT POLY-LINERSW 6x16x100 ___	16	6
FT POLY-LINERSW 6x18x100 ___	18	6
FT POLY-LINERSW 6x20x100 ___	20	6
FT POLY-LINERSW 6x24x100 ___	24	6

* Specify color ___: Black (BLK) or White (WHT)

See page D-3 for finish information

Solid bottom inserts

Part Number	For Tray Width Of in.	mm	Qty./Box	Wt./Box lbs.	kg
INSERT 4X118__	4"	(100)	1	6.8	(3.08)
INSERT 6X118__	6"	(150)	1	9.8	(4.44)
INSERT 8X118__	8"	(200)	1	13.3	(6.03)
INSERT 12X118__	12"	(300)	1	21.6	(9.80)
INSERT 16X118__	16"	(400)	1	26.4	(11.97)
INSERT 18X118__	18"	(450)	1	32.4	(14.69)
INSERT 20X118__	20"	(500)	1	32.9	(14.92)
INSERT 24X118__	24"	(600)	1	39.3	(17.82)

- Continuous support for sensitive cables
- Security of cable in high-traffic areas
- Hardware included
- Available for 4" (100mm) to 24" (600mm) wide trays
- Comes in 118" (2997mm) length
- Finishes __: **GS** (BLE, 304S and 316S also available upon request)

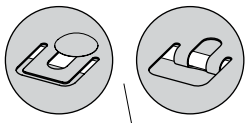

Attachment methods

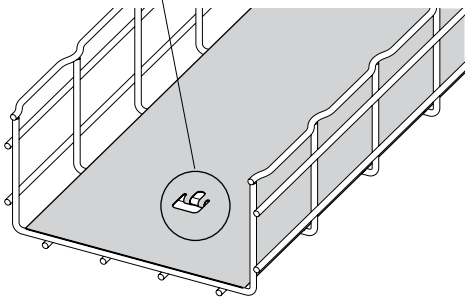

Attach with FTHDWE 1/4 & Top Washer

Blind ends

Part Number	'A' in.	(mm)	Height in.	(mm)	Box Quantity
FT BE 2X2	2"	(50)	2"	(50)	1
FT BE (*)X4	4"	(100)	(*)	(*)	1
FT BE (*)X6	6"	(150)	(*)	(*)	1
FT BE (**)X8	8"	(200)	(*)	(*)	1
FT BE (**)X12	12"	(300)	(**)	(**)	1
FT BE (**)X16	16"	(400)	(**)	(**)	1
FT BE (**)X18	18"	(450)	(**)	(**)	1
FT BE (**)X20	20"	(500)	(**)	(**)	1
FT BE (**)X24	24"	(600)	(**)	(**)	1

- Tab features eliminate need for hardware
- Forms a closure for a dead-end Flextray
- Hardware included
- Finish: **GLV** (SS6 also available upon request)

(*) Insert: 2 = 2" (50 mm), 4 = 4" (100 mm) for height

(**) Insert: 2 = 2" (50mm), 4 = 4" (100mm), 6 = 6" (150mm) for height

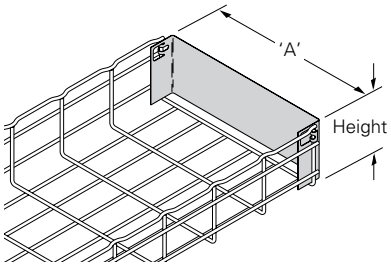

Strut mounting clip

Part Number	Description	Qty./Box	Wt./Box lbs. (kg)
BW4	Strut Mounting Clip	100	0.9 (0.41)

- Use to secure FLEXTRAY to horizontal strut support
- Designed for use as shown in drawing (no load rating)
- Finish: Black Zinc Phosphate

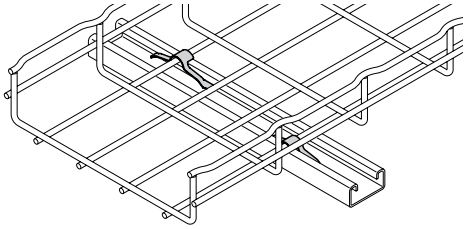

See page D-3 for finish information

Cable roller

- Protects and maintains recommended cable radii for Cat 5, Cat 5E, Cat 6, Cat 6A, Fiber, etc.
- Height of roller can be adjusted to tray depth
- Installs in seconds with no tools
- Reduces cable installation time
- Prevents migration of cables
- For use with 4" (100mm) to 32" (800mm) tray widths
- Finish: Cast Aluminum

Part Number	Description	Qty./Box	Wt./Box lbs. (kg)
CABLE ROLLER	Cable Roller	1	1.0 (0.45)

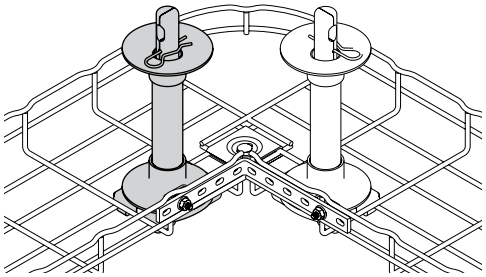

Quick, snap-together design

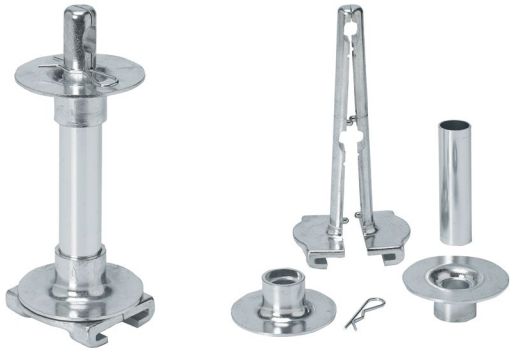

Toolless clip

- Securely holds tray to support
- Snap-in locking pin
- No tools or fastening required
- Fast hold-down method
- For use with the following:
  - FTB__CS (see pg. D-26)
  - L BRKT (see pg. D-26)
  - C BRKT (see pg. D-30)
- Finish: Plenum rated resin (black)

Part Number	Description	Qty./Box	Wt./Box lbs. (kg)
TOOLLESS CLIP	Toolless Hold-Down Clip	50	1.0 (0.45)

Conduit connector

- Conduit connector is designed to connect conduit to the side or bottom of Flextray
- Conduit bushing will remain outside of tray to keep cable pathway clear
- Bend tabs to secure connector to tray
- No hardware included
- Finishes __: **GLV**

Part Number	Conduit Size in. (mm)	Qty./Box	Wt./Box lbs. (kg)
FTA050CC__	1/2" (15)	10	2.0 (0.91)
FTA075CC __	3/4" (20)	10	2.0 (0.91)
FTA100CC __	1" (25)	10	2.0 (0.91)
FTA125CC __	1 1/4" (32)	10	2.0 (0.91)

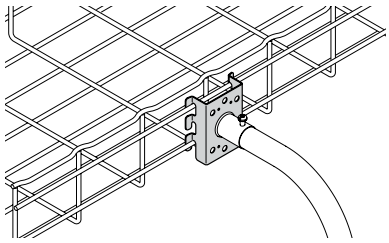

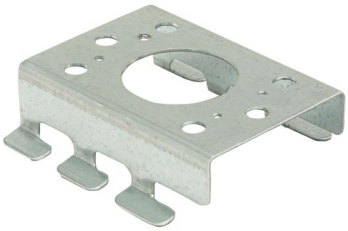

See page D-3 for finish information

Drop out fitting

Part Number	Description	Bend radius	Qty./ Box	Wt./Box lbs. (kg)
DROP OUT__	Drop Out Fitting	2.5″	50	15.0 (6.8)

- Keeps cable radius secure at drop point
- Retention tabs to secure positioning
- For use with 4" (100mm) to 32" (800mm) wide trays
- Attaches to tray without hardware
- Drop outs can be attached at bottom, side or ends of tray
- Retention tabs on bottom of drop out to secure positioning
- Finishes __: **EG** (BLE and SS6 also available upon request)

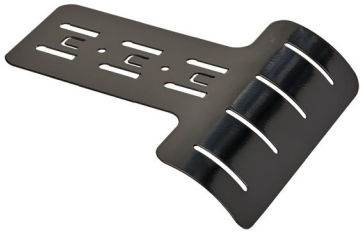

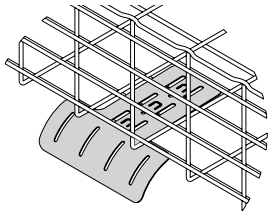

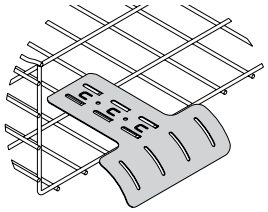

Side drop out fitting

Part Number	Width in. (mm)	Bend radius	Qty./ Box	Wt./Box lbs. (kg)
FTA6SDO	6.0 (152.4)	4"	10	7.17 (3.2)
FTA8SDO	8.0 (203.2)	4"	10	9.57 (4.3)
FTA12SDO	12.0 (304.8)	4"	10	14.35 (6.5)

- Keeps cable radius secure at drop point
- For use with 4" (100mm) to 32" (800mm) wide trays (Fig. 1)
- For use with 6" (152mm) to 12" (300mm) wide trays (Fig. 2)
- Drop outs can be attached at side or ends of tray as shown
- Finishes __: **EG** (BLE and SS6 also available upon request)

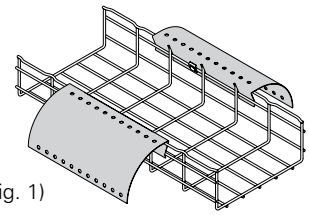

(Fig. 1)

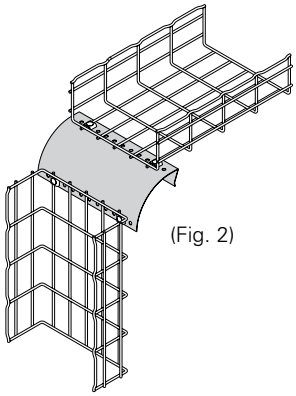

(Fig. 2)

Cable drop out

Part Number	Description	Qty./Box	Wt./Box lbs. (kg)
FTA2DO	Cable Drop Out	10	0.17 (0.08)

- Non-metallic 2" (50mm) radius Cable Drop-Out snap locks into mesh bottom and protects cables from sharp bend
- Material: Black Plenum-rated Plastic

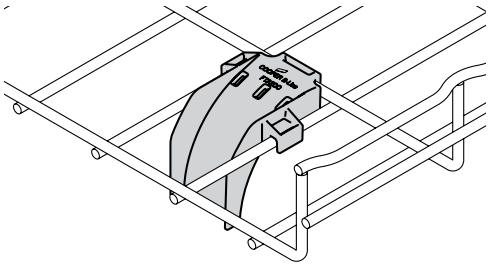

See page D-3 for finish information

Rack clamp

- Securely holds tray down to rack
- Installs without drilling
- Black-painted finish to match rack
- Finish__: **BLE**

Part Number	Description	Qty./Box	Wt./Box lbs. (kg)
RACK CLAMP__	Rack Clamp	4	4.7 (2.13)

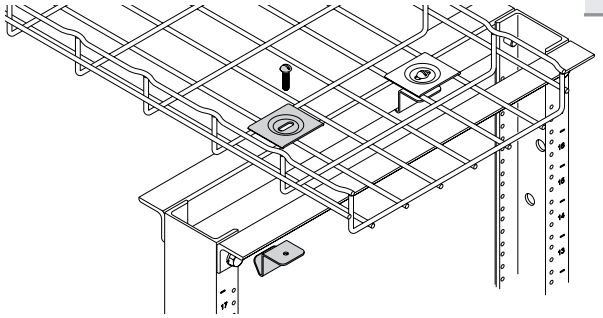

Adaptor kit

- Adaptor kit includes all hardware necessary to connect Flextray system to top of relay rack at right angle or parallel position
- Finish__: **YZN**

Part Number	Description	Qty./Box	Wt./Box lbs. (kg)
SB2204__	Adaptor Kit	1	0.37 (0.17)

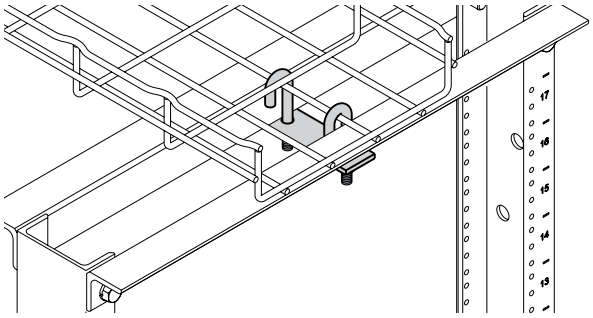

Adaptor Kit includes:

(1) - Mounting Plate
(2) - 5/16"-18 x 2" "J"-Bolts
(2) - HN 5/16"-18 Hex Nuts
(2) - LW 5/16" Lock Washers

Radius shield

- Provides a smooth inside radius surface.
- No tools or fasteners needed to install.
- Sizes for 2", 4" & 6" deep Flextray; 90° horizontal bends, tees, and crosses.
- Installs in seconds. Simply hold in place and bend back tabs.
- Slick surface to reduce cable friction.
- Material: Black Polycarbonate

Part Number	Height A in. (mm)	Qty./Box	Wt./Box lbs. (kg)
FTA2RS	2.5 (63)	50	4.0 (1.8)
FTA4RS	4.3 (110)	50	7.0 (3.2)
FTA6RS	5.9 (150)	25	5.0 (2.3)

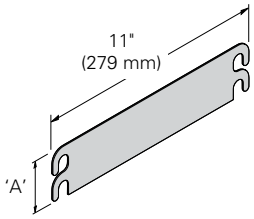

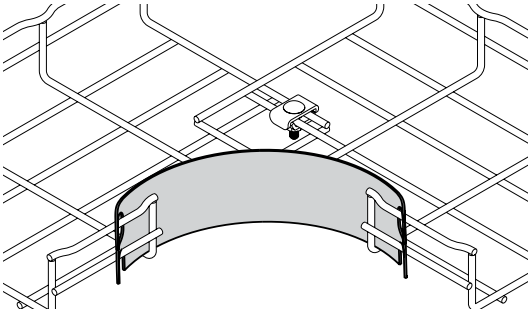

See page D-3 for finish information

Pedestal Clamp & Kit

Part Number	Description	Qty./ Box	Wt./Box lbs. (kg)
PEDESTAL CLAMP__	Pedestal Clamp	1	0.6 (0.27)
PEDESTAL KIT__	Pedestal Clamp Kit	1*	3.3 (1.49)

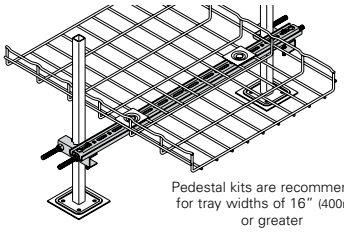

Pedestal kits are recommended for tray widths of 16" (400mm) or greater

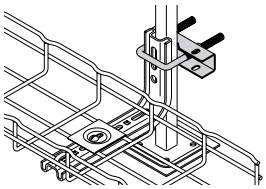

- Clamps to existing raised-access floor stanchion
- Use L BRKT (shown on D-26) or full pedestal kit to support trays under the raised access floor (sold separately)
- For tray widths 2" (50mm) to 20" (500mm)
- *Pedestal Clamp Kit includes two (2) pedestal clamps, 28" (711mm) profile section, bolts & nuts
- Kits include hardware
- SUPTWASHER & FTHDWE 1/4 sold separately
- Finishes __: **EG**

Under floor stand

Part Number	Overall Height in.	(mm)	Wt. Per Each lbs.	(kg)
WBU1203	3"	(76)	1.32	(0.60)
WBU1204	4"	(101)	1.60	(0.72)
WBU1205	5"	(127)	1.88	(0.85)
WBU1206	6"	(152)	2.17	(0.98)

- Heights of 3", 4", 5" or 6"
- Leg cutout allows for airflow
- No tools required to mount FLEXTRAY to stand
- Use WBUHD hold down clips to secure basket
- Stand width is 12"
- Fasten to floor for maximum stability
- Floor mounting slot size: .313" (7.9mm) x .813" (20.6mm) for 1/4" hardware

Floor Stand

Part Number	Wt. Per Pc. lbs.	(kg)	Box Quantity
FTA2FS	0.44"	(0.20)	10

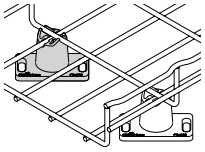

- Non-metallic snap lock floor stand is designed for use under access floors.
- Floor stand elevates Flextray system 1 5/8" (41.3mm) above the floor.
- To attach floor stand, use construction adhesive or anchors.
- Elevation increments of 1 3/8" (35mm) can be obtained by stacking floor stands.
- Sized for 1/4" hardware (order separately).
- Material: Black Plenum-rated plastic

Rubber cap

Part Number	Box Quantity	Wt. Per 100 lbs.	(kg)
B719EB	100	0.20	(0.10)

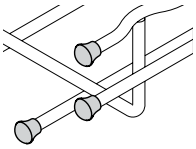

- Install on wire ends if required. Fits all wire diameters
- Sold as each

Paint

Part Number	Color	Qty./Box	Wt./Box lbs.	(kg)
SB420ATG	Gray Lacquer	1	0.9	(0.41)
SB420ACW	Computer White Lacquer	1	0.9	(0.41)
B999	Silver Zinc-Rich Paint	1	0.9	(0.41)

- Size: 12 ounce aerosol can
- Cannot ship air freight

See page D-3 for finish information

Label clip

- Clips easily into trays
- Use for identifying your cable pathways
- Can be used on all tray sizes
- Will not fit on side of 1 1/2" deep Flextray
- Finish: Non-plenum-rated resins

Part Number	Length in. (mm)	Qty./Box	Wt./Box lbs. (kg)
LABEL CLIP	10 1/2" (267)	10	0.6 (0.27)

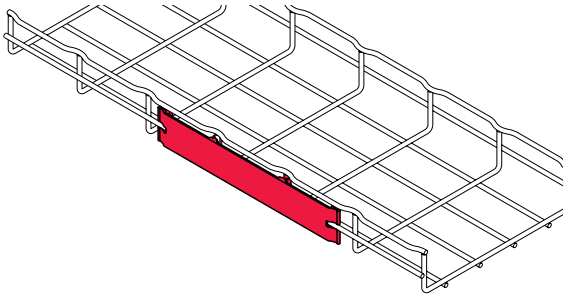

Ground bolt

- Attaches up to #1 ground wire to each tray section when separate ground wire is required
- Used for UL grounding compliance.
- When using color powder coated finish or paint, coating must be removed at the points of contact.
- Finish: Copper Plated

Part Number	Description	Qty./Box	Wt./Box lbs. (kg)
GROUND BOLT	Ground Bolt	100	1.0 (0.45)

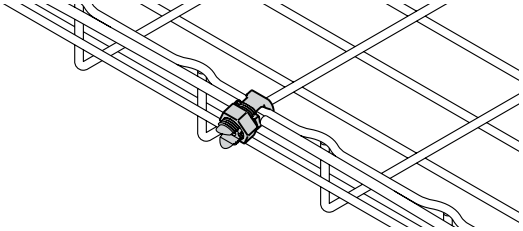

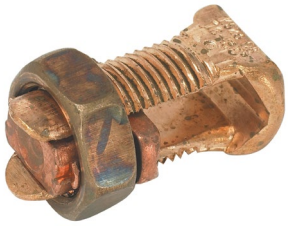

Ground wire supports

- Supports ground wire along side of tray
- Can be used on all trays
- Finish __: Zinc plated

Part Number	Description	Qty./Box	Wt./Box lbs. (kg)
GROUND SUPT GL	Ground Wire Support	100	0.6 (0.27)

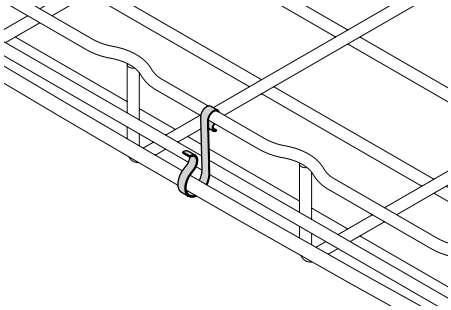

See page D-3 for finish information

- Complete source of hardware for ceiling connections
- Available in stock
- Strut can be purchased in pre-cut lengths and various colors
- All hardware is zinc plated

Threaded rod

Part Number	Size	Qty.	Wt./Qty. lbs. (kg)
ATR1/4x72	1/4" x 72" (1828mm)	1	0.7 (0.31)
ATR1/4x120	1/4" x 120" (3048mm)	1	1.2 (0.54)
ATR1/4x144	1/4" x 144" (3657mm)	1	1.4 (0.63)
ATR3/8x72	3/8" x 72" (1828mm)	1	1.7 (0.77)
ATR3/8x120	3/8" x 120" (3048mm)	1	2.9 (1.31)
ATR3/8x144	3/8" x 144" (3657mm)	1	3.5 (1.58)
ATR1/2x72	1/2" x 72" (1828mm)	1	3.2 (1.45)
ATR1/2x120	1/2" x 120" (3048mm)	1	5.4 (2.45)
ATR1/2x144	1/2" x 144" (3657mm)	1	6.5 (2.95)

Rod couplings

Part Number	Size	Qty.	Wt./Qty. lbs. (kg)
B655-1/4	1/4"-20	50	2.0 (0.91)
B655-3/8	3/8"-16	50	5.5 (2.49)
B655-1/2	1/2"-13	50	6.0 (2.72)

Hex Nuts

Part Number	Size	Qty.	Wt./Qty. lbs. (kg)
1/4HN	1/4"-20	100	0.6 (0.27)
3/8HN	3/8"-16	100	1.6 (0.72)
1/2HN	1/2"-13	100	4.3 (1.95)

Lock washers

Part Number	Size	Qty.	Wt./Qty. lbs. (kg)
1/4 LW	1/4"	200	0.6 (0.27)
3/8 LW	3/8"	200	1.6 (0.72)
1/2 LW	1/2"	200	2.0 (0.91)

Flat washers

Part Number	Size	Qty.	Wt./Qty. lbs. (kg)
1/4 FW	1/4"	200	1.2 (0.54)
3/8 FW	3/8"	200	3.0 (1.36)
1/2 FW	1/2"	200	6.6 (2.99)

Square washers

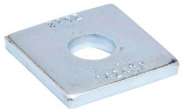

Part Number	Size	Qty.	Wt./Qty. lbs. (kg)
B201	7/16	50	6.0 (2.72)
B202	9/16	50	7.0 (3.17)

Beam Clamps

Part Number	Size	Qty.	Wt./Qty. lbs. (kg)
B3036L-3/8	3/8"-16	100	60.0 (27.2)
B3036L-1/2	1/2"-13	100	140.0 (63.5)

See page D-3 for finish information

Beam clamps

Part Number	Size	Qty.	Wt./Qty. lbs. (kg)
B444-1/4	1/4"-20	100	160 (72.5)
B444-3/8	3/8"-16	100	430 (195.0)
B444-1/2	1/2"-13	100	430 (195.0)

U-Bolt clamps

Part Number	Size	Qty.	Wt./Qty. lbs. (kg)
B441-22	3/8"-16 x 3 3/8" long	100	160 (72.5)

U-Bolts

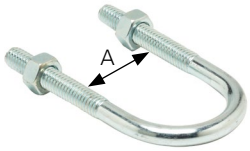

Part Number	'A' in.	(mm)	Thread Size	Box Qty	Wt. Per Box lbs.	(kg)
B501-1	1 3/8"	(30)	5/16"-18	50	7.0	(3.17)
B501-1 1/2	2"	(50)	5/16"-18	50	8.0	(3.63)
B501-2	2 7/16"	(62)	3/8"-16	20	5.4	(2.45)
B501-2 1/2	2 15/16"	(75)	3/8"-16	25	8.0	(3.63)

Strut channels

B22S B22SH

Part Number	Channel Size	Qty.	Wt./Qty. lbs. (kg)
B22SGALV120	1 5/8" x 120" - 12 ga.	1	6.0 (2.72)
B22SHGALV120	1 5/8" x 120" - 12 ga.	1	6.0 (2.72)

Spring nuts

Part Number	Thread Size	Qty.	Wt./Qty. lbs. (kg)
N224	1/4"-20	100	6.5 (2.95)
N228	3/8"-16	100	9.3 (4.22)
N225	1/2"-13	100	11.3 (5.12)

Concrete Rapid Rod™ hanger

Part Number	Rod Size	Shank Size	Qty.	Wt./Qty. lbs. (kg)
ARC-37-150-2	3/8"	1/4" x 1 1/2"	100	3.4 (1.54)

Wood Rapid Rod™ hanger

Part Number	Rod Size	Shank Size	Qty.	Wt./Qty. lbs. (kg)
ARW-37-200-2	3/8"	1/4" x 2"	100	3.4 (1.54)
ARW-37-200SW-2	3/8"	1/4" x 2"	100	3.4 (1.54)

SW = Side Mount

Steel Rapid Rod™ hanger

Part Number	Rod Size	Shank Size	Qty.	Wt./Qty. lbs. (kg)
ARS-37-150-2	3/8"	1/4" x 1 1/2"	100	3.4 (1.54)
ARS-37-100SW-2	3/8"	1/4" x 1"	100	3.4 (1.54)

SW = Side Mount

Sockets for Rapid Rod hangers

Part Number	Size	Qty.	Wt./Qty. lbs. (kg)
7187S-2	Steel Socket	1	4.5 (2.04)
7187-2	Concrete Socket	1	4.5 (2.04)
7197-2	3/8" Concrete Socket	1	4.5 (2.04)

See page D-3 for finish information

CleanShear Cutters
PATENT PENDING
FLEXTRAY
GS METALS

Flextray cutters

- Exclusive, patented Cleanshear™ cuts tray fast
- No sharp edges
- Designed specifically for cutting Flextray
- Safely cut and bend Flextray into any configuration

Part Number	Description	Qty./Box	Wt./Box lbs. (kg)
CLEANSHEAR	CLEANSHEAR Cutting Tool	1 per box	4.3 (1.95)

Patented

1 Face tray up. Slide cutter next to vertical wire and cut.

2 Turn tray to the side with open side facing you. Repeat step 1 to cut wire.

3 Finish cutting all side wires.

4 Turn tray open-side down and cut wires from bottom of tray.

5 Finish cutting by moving to other side of tray to cut remaining wires.

Flextray bender

- Cleanshear bender has our exclusive bending attachment
- Makes bending larger trays easy
- Recommended for bending tray widths of 16" (400mm) or greater

Part Number	Description	Qty./Box	Wt./Box lbs. (kg)
CLEANSHEAR BEND	CLEANSHEAR Cutting Tool With Bender Attachment	1 per box	5.4 (2.45)

Patented

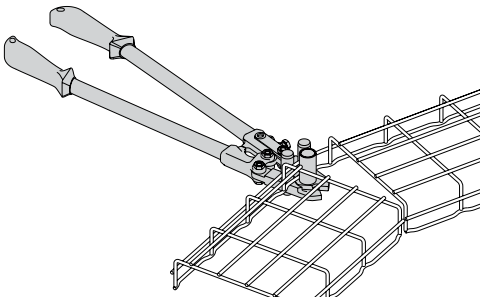

90° Horizontal bends (short radius)

- Make your own field cut horizontal bends using Cleanshear to make safe, smooth cuts
- Can be made from any tray width and depth with any available finish
- SUPT WASHER & FTHDWE 1/4 hardware may be used on bottom of tray instead of WASHER SPL KIT where desired
- Note: Please note the number of WASHER SPL KIT's recommended on this page for forming fittings does not guarantee the UL Classification will be met

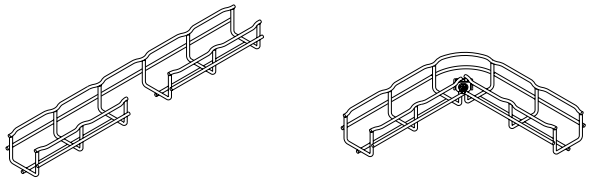

2" (50mm) Tray Width

Flextray Depth in. (mm)	Required Hardware Description	Quantity
2" (50)	WASHER SPL KIT	1

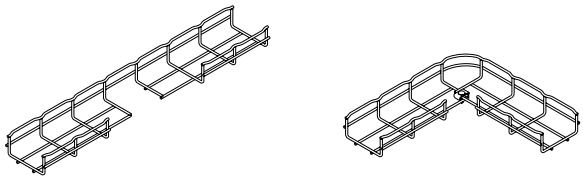

4" (100mm) Tray Width

Flextray Depth in. (mm)	Required Hardware Description	Quantity
2" (50)	WASHER SPL KIT	1
4" (100)	WASHER SPL KIT	1

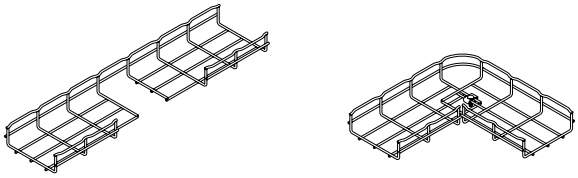

6" (150mm) Tray Width

Flextray Depth in. (mm)	Required Hardware Description	Quantity
2" (50)	WASHER SPL KIT	1
4" (100)	WASHER SPL KIT	1

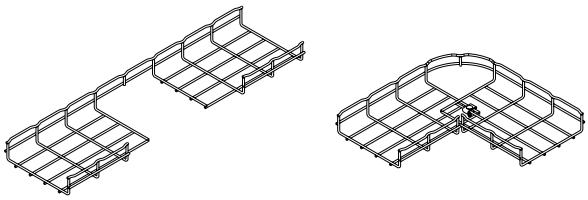

8" (200mm) Tray Width

Flextray Depth in. (mm)	Required Hardware Description	Quantity
2" (50)	WASHER SPL KIT	1
4" (100)	WASHER SPL KIT	1
6" (150)	WASHER SPL KIT	1

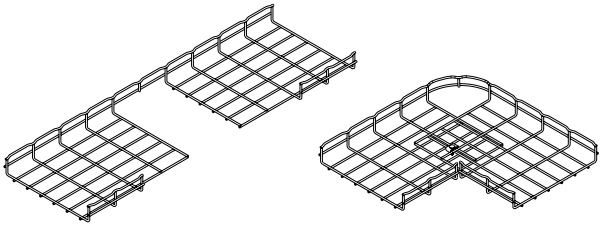

12" (300mm) Tray Width

Flextray Depth in. (mm)	Required Hardware Description	Quantity
2" (50)	WASHER SPL KIT	1
4" (100)	WASHER SPL KIT	1
6" (150)	WASHER SPL KIT	1

90° Horizontal bends (short radius)

- Make your own field cut horizontal bends using Cleanshear to make safe, smooth cuts
- Can be made from any tray width and depth with any available finish
- SUPT WASHER & FTHDWE 1/4 hardware may be used on bottom of tray instead of WASHER SPL KIT where desired

16" (400mm) Tray Width

Flextray Depth in. (mm)	Required Hardware Description	Quantity
2" (50)	WASHER SPL KIT	3
4" (100)	WASHER SPL KIT	3
6" (150)	WASHER SPL KIT	3

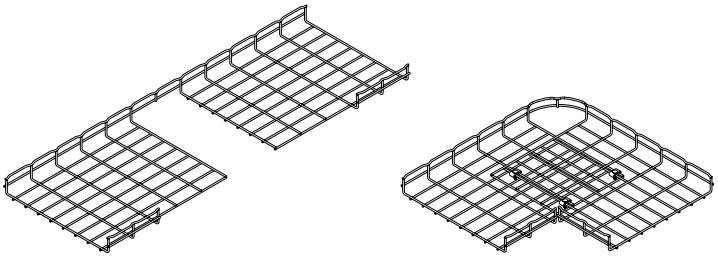

18" (450mm) Tray Width

Flextray Depth in. (mm)	Required Hardware Description	Quantity
2" (50)	WASHER SPL KIT	3
4" (100)	WASHER SPL KIT	3
6" (150)	WASHER SPL KIT	3

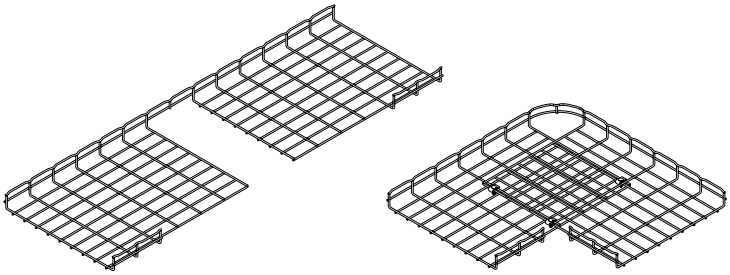

20" (500mm) Tray Width

Flextray Depth in. (mm)	Required Hardware Description	Quantity
2" (50)	WASHER SPL KIT	3
4" (100)	WASHER SPL KIT	3
6" (150)	WASHER SPL KIT	3

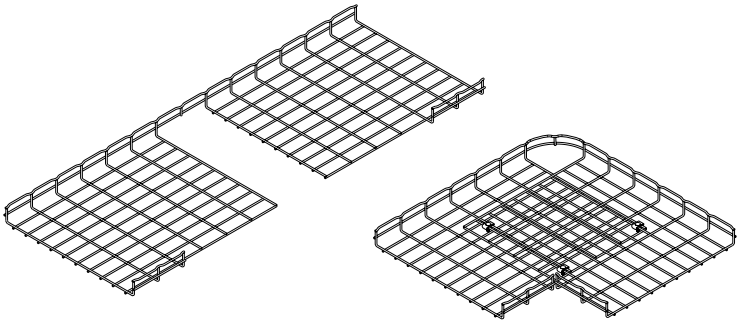

24" (600mm) Tray Width

Flextray Depth in. (mm)	Required Hardware Description	Quantity
2" (50)	WASHER SPL KIT	3
4" (100)	WASHER SPL KIT	3
6" (150)	WASHER SPL KIT	3

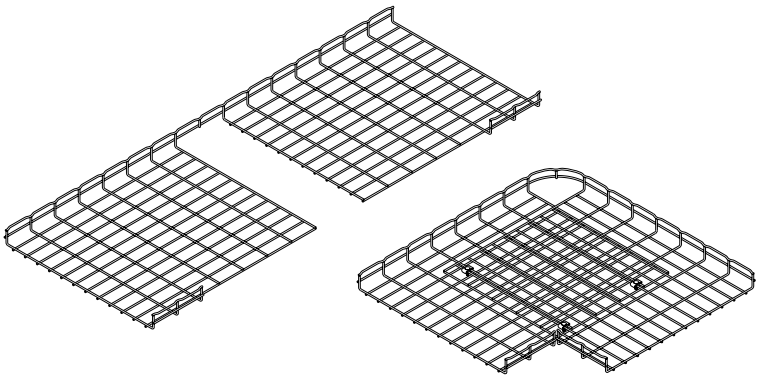

90° Horizontal Bends (Long Radius)

- Make your own field cut horizontal sweeps using Cleanshear to make safe, smooth cuts
- Can be made from any tray width and depth with any available finish
- Cut as many segments as required to control sweep radius (use chart for recommendations)
- One (1) WASHER SPL KIT is required to connect each cut segment minus one, this segment uses one (1) SPLICE BAR, two (2) FTHDWE 1/4 and two (2) BTM WASHER

- Illustration shown below is for a 8" (200mm) width
- 1.5" deep Flextray has only one (1) side wire
  2" deep Flextray has two (2) side wires - shown
  4" deep Flextray has three (3) side wires
  6" deep Flextray has four (4) side wires

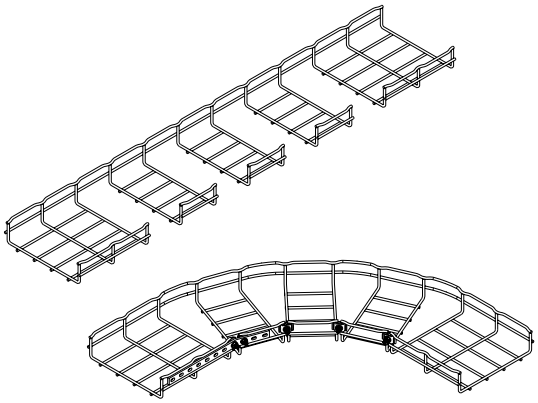

Flextray Width in. (mm)	Segments To Be Removed	Component Qty. WASHER SPL KIT	FTHDWE 1/4 & BTM WASHER	SPLICE BAR
4" (100)	2	1	2	1
6" (150)	3	2	2	1
8" (200)	4	3	2	1
12" (300)	6	5	2	1
16" (400)	7	6	2	1
18" (450)	8	7	2	1
20" (500)	10	9	2	1
24" (600)	11	10	2	1
30" (750)	13	12	2	1
32" (800)	13	12	2	1

90° Horizontal Bend From (2) Straight Sections

- Cut required number of wire side sections listed in chart per the illustration below
  (Illustration is for a 8" (200mm) width)
- 1.5" deep Flextray has only one (1) side wire
  2" deep Flextray has two (2) side wires - shown
  4" deep Flextray has three (3) side wires
  6" deep Flextray has four (4) side wires

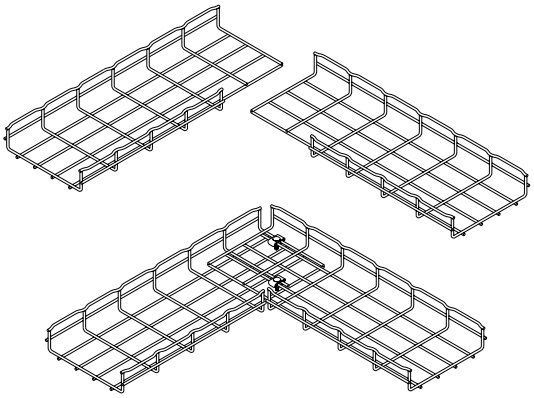

Flextray Width in. (mm)	Side Sections To Be Removed	WASHER SPL KIT Qty.
4" (100)	1	2
6" (150)	2	2
8" (200)	2	2
12" (300)	3	2
16" (400)	4	2
18" (450)	5	2
20" (500)	5	2
24" (600)	6	2
30" (750)	8	2
32" (800)	8	2

Reducers

Large Flextray Width		Component Qty. WASHER SPL KIT		FTHDWE 1/4 & BTM WASHER		SPLICE BAR	
in.	(mm)	(SR)	(LRR)	(SR)	(LRR)	(SR)	(LRR)
4"	(100)	—	1	—	2	—	1
6"	(150)	—	2	—	2	—	1
8"	(200)	1	2	4	2	2	1
12"	(300)	2	3	4	2	2	1
16"	(400)	2	3	4	2	2	1
18"	(450)	2	3	4	2	2	1
20"	(500)	3	3	4	2	2	1
24"	(600)	3	3	4	2	2	1
30"	(750)	3	3	4	2	2	1
32"	(800)	3	3	4	2	2	1

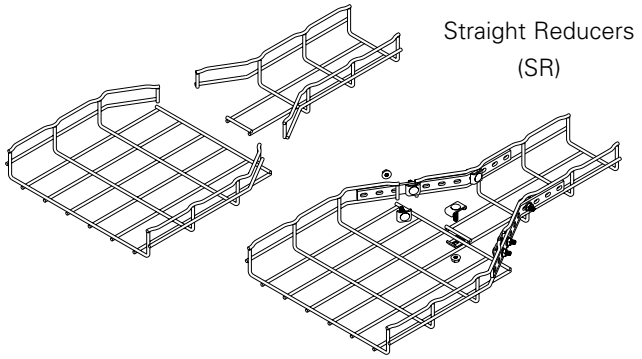

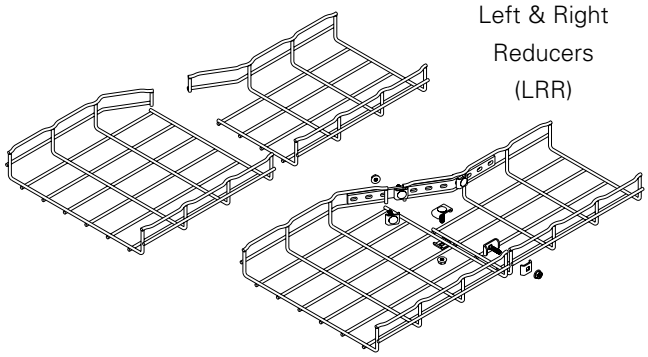

- 1.5" deep Flextray has only one (1) side wire
  2" deep Flextray has two (2) side wires - shown
  4" deep Flextray has three (3) side wires
  6" deep Flextray has four (4) side wires

Vertical inside & outside bends

- Cut wire section as shown and bend to desired angle
- 1.5" deep Flextray has only one (1) side wire
  2" deep Flextray has two (2) side wires - shown
  4" deep Flextray has three (3) side wires
  6" deep Flextray has four (4) side wires

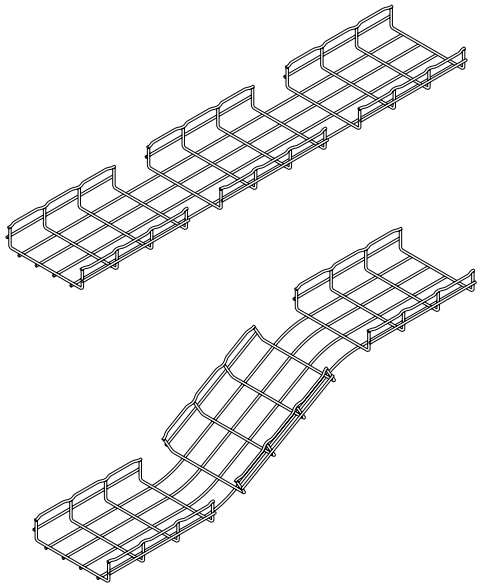

Horizontal tees (and crosses)

- Cut wire side sections as shown in the illustration below (Illustration is for a 8" (200mm) width)
  - 2" deep Flextray has two (2) side wires - (shown below)
  - 4" deep Flextray has three (3) side wires
  - 6" deep Flextray has four (4) side wires
- For crosses, duplicate process on opposite side

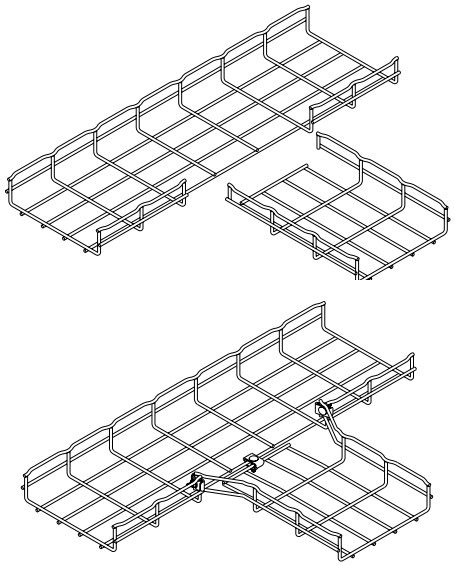

Tray Width in.	(mm)	WASHER SPL KIT Qty.
2"	(50)	2
4"	(100)	2
6"	(150)	3
8"	(200)	3
12"	(300)	4
16"	(400)	4
18"	(450)	4
20"	(500)	4
24"	(600)	4
30"	(750)	5
32"	(800)	5